CITY OF HOLLY HILL, FLORIDA

CITY COMMISSION

AGENDA ● SEPTEMBER 26, 2023

City Commission ChamberSecond Public Hearing Budget & Millage Rate Mtg **6:00 PM**

CITY HALL
1065 RIDGEWOOD AVENUE
HOLLY HILL, FL 32117

City Clerk's office: (386) 248-9441 - Fax: (386) 248-9448

HOLLY HILL
FLORIDA

City Commission Chamber
City Hall
1065 Ridgewood Avenue
Holly Hill, FL 32117

CITY COMMISSION MEMBERS

Mayor
Chris Via

District 1 - Commissioner
John Penny

District 2 - Commissioner
Penny Currie

District 3 - Commissioner
John C. Danio

District 4 - Commissioner
Roy Johnson

CITY MANAGER
Joseph Forte

CITY CLERK
Valerie Manning

1. CALL TO ORDER

a. Roll Call
b. Invocation by City Commissioner John Danio
c. Pledge of Allegiance

2. PUBLIC HEARINGS - FINAL BUDGET & FINAL MILLAGE RATE - SECOND HEARINGS

Please silence any cell phone, pager or noise making device as not to interrupt the meeting. Staff will introduce each item for consideration, with comments and recommendations. The applicant or appellant and supporters will be heard first. Those in opposition to the request will be heard next. Comments should be restricted to pertinent information regarding the agenda item under discussion. Out of courtesy to others, we ask that speakers keep their comments brief and try to limit these comments to information not previously discussed. Speakers should state their name and address clearly for the record. The City Clerk's office is required to retain any documents, photographs, drawings, etc. that are shown to the City Commissioners in support of a position. The City Commission may ask questions of speakers or of staff members. The Mayor will then ask the City Commission to make a recommendation or motion. Once a motion has been made and seconded, discussion will be closed to the floor. Following City Commission discussion, a vote will be taken. During voting, Commissioners who do not cast objecting votes are considered to have voted in support of the motion.

1. Resolution –2023-R-51 PUBLIC HEARING - SECOND READING - a Resolution of the City Commission of the City of Holly Hill, Volusia County, Florida, Adopting the Final Levying of Ad Valorem Taxes for the City of Holly Hill for Fiscal Year 2023-2024; Providing for Severability; and Providing for an Effective Date.

   (Requested by Michele Moore, Finance)

2. Resolution –2023-R-52 PUBLIC HEARING - SECOND READING - a Resolution of the City Commission of the City of Holly Hill, Volusia County, Florida, Adopting the Final Budget for the City of Holly Hill for the Fiscal Year 2023-2024; Providing for Severability; and Providing for an Effective Date.

   (Requested by Michele Moore, Finance)

3. PRESENTATION

1. FL League of Mayors and Business Watch - City Catalyst Grant Presentation

   (Requested by Valerie Manning, City Clerk)

4. PUBLIC COMMENTS

5. APPROVAL OF MINUTES - NONE

6. CONSENT AGENDA - ITEMS (1 - 4)

The action proposed is stated for each item on the Consent Agenda. Unless a City Commissioner removes an item from the Consent Agenda, no discussion on individual items will occur and a single motion will approve all items. Is there anyone in the audience who wishes to speak on any item on the Consent Agenda?

1. Resolution –2023-R-53 A Resolution of the City Commission of the City of Holly Hill, Florida, Authorizing the City Manager to Sign an Amended Renewal Lease Agreement Between the City and the Volusia/Flagler Ymca; Establishing the Terms of This Agreement; Providing for Severability; and Providing an Effective Date.

   (Requested by Joseph Forte, City Manager)

2. Resolution –2023-R-54 A Resolution of the City Commission of the City of Holly Hill, Florida, Approving the Piggyback of the City of Clermont, Fl (Agreement No.2023-071), for Sanitary Sewer Manhole, Vault, and Lift Station Rehabilitation with Danus Utilities, Inc., Establishing an Annual Cost Not to Exceed $75,000 and Authorizing the City Manager to Execute the Same; Providing for Severability; and Providing for an Effective Date.

   (Requested by Antoine Khoury, Public Works)

3. Resolution –2023-R-46 A Resolution of the City Commission of the City of Holly Hill, Florida, Authorizing the City Manager to Enter into an Agreement with Parker Mynchenberg & Associates, Inc., to Provide Professional Consultant Services to Extend the Sewer Force Main Further West Across Nova Road at 10Th Street in an Amount Not to Exceed $47,700.00; Providing for Severability; and Providing for an Effective Date.

   (Requested by Antoine Khoury, Public Works)

4. Property & Liability Insurance for FY 2024

   (Requested by Michele Moore, Finance)

7. REGULAR AGENDA

1. Resolution –2023-R-55 A Resolution of the City Commission of the City of Holly Hill, Florida, Awarding the Contract of Fire Station Construction to Sabounji Construction, Inc., in the Amount of $3,375,700.00 and Authorizing the City Manager to Execute the Same; Providing for Severability; and Providing for an Effective Date.

   (Requested by Antoine Khoury, Public Works)

2. Resolution –2023-R-56 A Resolution of the City Commission of the City of Holly Hill, Volusia County, Florida, Amending the Water and Sewer Rate Schedule for the City of Holly Hill for the Fiscal Year 2023-2024; Providing for Severability; and Providing for an Effective Date.

   (Requested by Michele Moore, Finance)

3. Resolution –2023-R-57 A Resolution of the City Commission of the City of Holly Hill, Volusia County, Florida, in Opposition to the Proposed Construction of the Belvedere Fuel Farm Near Ormond Beach in the Unincorporated Area of Volusia County At, or About 874 Hull Road, Ormond Beach, Florida.

   (Requested by Joseph Forte, City Manager)

4. Uncollectible Utility Account Adjustments

   (Requested by Michele Moore, Finance)

5. Request that the City Commission Determine Whether or Not a Nuisance Exist at 1625 Anniston Avenue, and If So, Determine What Course of Action Should be Taken

   (Requested by Brian Walker, Board of Planning and Appeals)

8. PUBLIC HEARINGS

Please silence any cell phone, pager or noise making device as not to interrupt the meeting. Staff will introduce each item for consideration, with comments and recommendations. The applicant or appellant and supporters will be heard first. Those in opposition to the request will be heard next. Comments should be restricted to pertinent information regarding the agenda item under discussion. Out of courtesy to others, we ask that speakers keep their comments brief and try to limit these comments to information not previously discussed. Speakers should state their name and address clearly for the record. The City Clerk's office is required to retain any documents, photographs, drawings, etc. that are shown to the City Commissioners in support of a position. The City Commission may ask questions of speakers or of staff members. The Mayor will then ask the City Commission to make a recommendation or motion. Once a motion has been made and seconded, discussion will be closed to the floor. Following City Commission discussion, a vote will be taken. During voting, Commissioners who do not cast objecting votes are considered to have voted in support of the motion.

1. Resolution –2023-R-58 A Resolution of the City Commission of the City of Holly Hill, Florida, Adopting an Official List Identifying City-Owned Real Property Deemed Appropriate for Use as Affordable Housing Pursuant to Section 166.4451, Florida Statutes; Providing for Severability; Providing for Conflicts; and Providing for an Effective Date.

   (Requested by Valerie Manning, City Clerk)

2. Ordinance –2023-O-3063 SECOND READING - an Ordinance of the City of Holly Hill, Volusia County Florida, Annexing by Voluntary Petition Approximately .83 Acres Identified as Parcel Numbers 4242-31-01-0291 and 4242-31-01-0290 Contiguous to the City of Holly Hill; Redefining Boundaries of the City of Holly Hill to Include Said Property and the Adjacent Rights-Of-Way of N Nova Road and Old Kings Road; Directing the City Clerk to File the Ordinance with the Clerk of the Circuit Court, with the Chief Administrative Officer of Volusia County and with the Department of State; Providing for Conflicting Ordinances; Providing for Severability; and Providing an Effective Date.

   (Requested by Brian Walker, Board of Planning and Appeals)

9. COMMUNICATIONS

A. City Manager Comments
B. City Attorney Comments
C. City Commission Comments
D. Mayor's Comments

10. ADJOURNMENT

Website Address – www.hollyhillfl.org (City Clerk)

NOTICE – If any person decides to appeal any decision of the City Commission at this meeting, he/she will need a record of the proceedings and, for that purpose, he/she may need to ensure that a verbatim record of the proceedings is made, which record includes the testimony and evidence upon which the appeal is to be based. The City does not prepare or provide such a record.



For special accommodations, please notify the City Clerk's Office at least 72 hours in advance. (386) 248-9441



Help for the hearing impaired is available through the Assistive Listening System. Receivers can be obtained from the City Clerk's Office.

In accordance with the Americans with Disabilities Act (ADA), persons needing a special accommodation to participate in the Commission proceedings should contact the City Clerk's Office no later than three (3) days prior to the proceedings.

HOLLY HILL
FLORIDA

STAFF REPORT
CITY OF HOLLY HILL, FLORIDA

City Commission
Resolution

MEETING DATE: **September 26, 2023**
FROM: **Michele Moore**
SUBJECT: **PUBLIC HEARING - SECOND READING - a Resolution of the City Commission of the City of Holly Hill, Volusia County, Florida, Adopting the Final Levying of Ad Valorem Taxes for the City of Holly Hill for Fiscal Year 2023-2024; Providing for Severability; and Providing for an Effective Date.**
NUMBER: **2023-R-51**
APPLICANT:
PLANNER:

DISCUSSION:

Florida Statute requires the City to hold a Public Hearing to adopt a Final millage rate for the upcoming fiscal year, 2023-2024. The City Commission adopted the tentative millage rate of 6.25 at the tentative public hearing at a meeting on September 11, 2023.

Before the adoption of the final millage rate, the Notice of Proposed Property Taxes, otherwise known as TRIM (Truth in Millage) notice, was prepared and mailed to taxpayers by the County Property Appraiser. Printed on the TRIM notice is the date of the first scheduled public hearing to adopt the tentative budget and the tentative millage rate which was approved September 11th. The City is required to provide notice of the final hearing with an advertisement containing the summary budget information along with the final millage rate and the final approved budget. This was published Friday, September 22, 2023 in the Daytona Beach News-Journal.

The purpose of the final public hearing is to once again give the general public an opportunity to speak for or against the budget and millage rate. At this meeting the Commission will adopt the final budget and millage rate.

FISCAL ANALYSIS:

The City Commission is hereby being requested to set the final millage rate at the proposed millage rate of 6.25. The proposed budget for the Fiscal Year 2023-2024 Budget is based on this millage rate which is 11.29% above the rolled back rate of 5.616 mills.

STAFF RECOMMENDATION:

Approve the Resolution adopting the final millage rate of 6.25 mills.

COMMISSION GOAL:

Goal #1: Develop and maintain a sound and sustainable financial plan for the city that establishes sufficient reserves for all funds, ensures (whenever possible) that user fees pay for services rendered, provides a realistic capital improvement program, and encourages public/private sector partnerships and intergovernmental partnerships.

Goal #4: Provide proficient public health and safety services in terms of police and fire protection, water, storm water, waste water and solid waste management and disaster preparedness with a focus on intergovernmental collaboration, private sector partnerships, and utilization of technologies and proven innovations.

MOTION:

APPROVE THE RESOLUTION ADOPTING THE FINAL MILLAGE RATE OF 6.25 MILLS.

Resolution No. 2023-51

PUBLIC HEARING - SECOND READING - A RESOLUTION OF THE CITY COMMISSION OF THE CITY OF HOLLY HILL, VOLUSIA COUNTY, FLORIDA, ADOPTING THE FINAL LEVYING OF AD VALOREM TAXES FOR THE CITY OF HOLLY HILL FOR FISCAL YEAR 2023-2024; PROVIDING FOR SEVERABILITY; AND PROVIDING FOR AN EFFECTIVE DATE.

A RESOLUTION OF THE CITY COMMISSION OF THE CITY OF HOLLY HILL, VOLUSIA COUNTY, FLORIDA, ADOPTING THE FINAL LEVYING OF AD VALOREM TAXES FOR THE CITY OF HOLLY HILL FOR THE FISCAL YEAR 2023-2024; PROVIDING FOR SEVERABILITY; AND PROVIDING FOR AN EFFECTIVE DATE.

WHEREAS, The City of Holly Hill of Volusia County, Florida, on September 11, 2023, adopted a Fiscal year 2023-2024 tentative millage rate following a public hearing as required by Florida Statute 200.065; and

WHEREAS, The City of Holly Hill of Volusia County, Florida, on September 26, 2023, adopted a Fiscal year 2023-2024 final millage rate following a public hearing as required by Florida Statute 200.065; and

WHEREAS, the City of Holly Hill of Volusia County Florida, held a public hearing as required by Florida Statute 200.065; and

WHEREAS, the gross taxable value for operating purposes not exempt from taxation Volusia County has been certified by the County Property Appraiser to the City of Holly Hill as $923,655,475.

NOW, THEREFORE, BE IT RESOLVED BY THE CITY COMMISSION OF THE CITY OF HOLLY HILL, FLORIDA:

SECTION 1. The FY 2023-2024 final operating millage is 6.25 mills, which is greater than the rolled-back rate of 5.616 mills by 11.29%

SECTION 2. The Final Public Hearing was held on September 26, 2023 at 6:00pm.

SECTION 3. SEVERABILITY. If any section or portion of a section of this Resolution proves to be invalid, unlawful, or unconstitutional, it shall not be held to invalidate or impair the validity, force, or effect of any other section or part of this Resolution.

SECTION 4. EFFECTIVE DATE. This Resolution shall take effect

immediately upon its adoption.

APPROVED AND AUTHENTICATED on this 26th day of SEPTEMBER, 2023 for final reading.

HOLLY HILL
FLORIDA

STAFF REPORT
CITY OF HOLLY HILL, FLORIDA

City Commission
Resolution

MEETING DATE: **September 26, 2023**
FROM: **Michele Moore**
SUBJECT: **PUBLIC HEARING - SECOND READING - a Resolution of the City Commission of the City of Holly Hill, Volusia County, Florida, Adopting the Final Budget for the City of Holly Hill for the Fiscal Year 2023-2024; Providing for Severability; and Providing for an Effective Date.**
NUMBER: **2023-R-52**
APPLICANT:
PLANNER:

DISCUSSION:

Florida Statute requires the City to hold a Public Hearing to adopt a final budget for the upcoming fiscal year, 2023 - 2024. State law requires that two formal public hearings be held in September and the first hearing date cannot conflict with the hearing dates established by the County School Board or the County Commission.

The first hearing to adopt a tentative budget was on September 11, 2023. September 26, 2023 is the second hearing to adopt the Final Budget.

The purpose of the final public hearing is to give the general public an opportunity to speak for or against the budget. At this meeting the Commission will adopt the final budget.

FISCAL ANALYSIS:

Dependent upon City Commission action.

STAFF RECOMMENDATION:

Approve the Resolution and the Final budget.

COMMISSION GOAL:

Goal #1: Develop and maintain a sound and sustainable financial plan for the city that establishes sufficient reserves for all funds, ensures (whenever possible) that user fees pay for services rendered, provides a realistic capital improvement program, and encourages public/private sector partnerships and intergovernmental partnerships.

Goal #4: Provide proficient public health and safety services in terms of police and fire protection, water, storm water, waste water and solid waste management and disaster preparedness with a focus on intergovernmental collaboration, private sector partnerships, and utilization of technologies and proven innovations.

MOTION:

APPROVE THE RESOLUTION ADOPTING THE FINAL BUDGET FOR THE CITY OF HOLLY HILL FOR THE FISCAL YEAR 2023 - 2024.

ATTACHMENTS:

- Holly Hill Budget FY23_24 SECOND HEARING (PDF)
- FY2024 Budget Revenue & Expenditures Summary (PDF)

Resolution No. 2023-52

PUBLIC HEARING - SECOND READING - A RESOLUTION OF THE CITY COMMISSION OF THE CITY OF HOLLY HILL, VOLUSIA COUNTY, FLORIDA, ADOPTING THE FINAL BUDGET FOR THE CITY OF HOLLY HILL FOR THE FISCAL YEAR 2023-2024; PROVIDING FOR SEVERABILITY; AND PROVIDING FOR AN EFFECTIVE DATE.

A RESOLUTION OF THE CITY COMMISSION OF THE CITY OF HOLLY HILL, VOLUSIA COUNTY, FLORIDA, ADOPTING THE FINAL BUDGET FOR THE CITY OF HOLLY HILL FOR THE FISCAL YEAR 2023 - 2024; PROVIDING FOR SEVERABILITY; AND PROVIDING FOR AN EFFECTIVE DATE.

WHEREAS, The City of Holly Hill of Volusia County, Florida, on September 11, 2023, held a public hearing for the tentative budget as required by Florida Statute 200.065; and

WHEREAS, The City of Holly Hill of Volusia County, Florida, on September 26, 2023, held a public hearing for the final budget as required by Florida Statute 200.065; and

WHEREAS, the City of Holly Hill of Volusia County Florida, set forth the appropriations and revenue estimate for the Budget for Fiscal Year 2023-2024.

NOW, THEREFORE, BE IT RESOLVED BY THE CITY COMMISSION OF THE CITY OF HOLLY HILL, FLORIDA:

SECTION 1. That the City Commission of the City of Holly Hill, Florida pursuant to the Charter of the City of Holly Hill and Chapter 166, Florida Statutes, does hereby adopt the Final General, Enterprise and all other related Fund Budgets, which are attached hereto and incorporated herein as Exhibit "A", which may later be amended by the City Commission.

SECTION 2. SEVERABILITY. If any section or portion of a section of this Resolution proves to be invalid, unlawful, or unconstitutional, it shall not be held to invalidate or impair the validity, force, or effect of any other section or part of this Resolution.

SECTION 3. EFFECTIVE DATE. This Resolution shall take effect immediately upon its adoption.

APPROVED AND AUTHENTICATED on this 26th day of SEPTEMBER, 2023 for final reading.

HOLLY HILL
FLORIDA

FY 2023 – 2024
BUDGET

Attachment: Holly Hill Budget FY23_24 SECOND HEARING (2023-R-52 : Final Budget Fiscal Year 2023

Attachment: Holly Hill Budget FY23_24 SECOND HEARING (2023-R-52 : Final Budget Fiscal Year 2023

TABLE OF CONTENTS

BUDGET SUMMARY 3
GENERAL FUND 5
LOCAL OPTION FUEL TAX FUND 50
BUILDING PERMITTING FUND 52
LAW ENFORCEMENT TRUST/POLICE EXPLORERS FUNDS 57
COMMUNITY REDEVLOPMENT FUND 60
CRA PROJECTS FUND 70
CAPITAL PROJECTS FUND 72
WATER & SEWER FUND 74
PROPRIETARY R&R FUND 90
STORMWATER FUND 93
STORMWATER CAPITAL PROJECTS FUND 100
SOLID WASTE ENTERPRISE 102
CAPITAL PROJECTS LIST 105

HOLLY HILL
FLORIDA

BUDGET SUMMARY

Budget FY 2023 - 2024

Attachment: Holly Hill Budget FY23_24 SECOND HEARING (2023-R-52 : Final Budget Fiscal Year 2023

FY 2023-2024 BUDGET

REVENUE AND EXPENDITURES FY 2023-2024	REVENUE	EXPENDITURE
001 - GENERAL FUND	$ 11,131,308	$ 11,131,308
002 - LOGT 2nd	$ 335,000	$ 335,000
004 - BUILDING AND ZONING	$ 390,289	$ 390,289
110 - LAW ENFORCEMENT TRUST	$ -	$ -
605 - POLICE EXPLORERS	$ 3,195	$ 3,195
130 - CRA	$ 3,282,403	$ 3,282,403
139 - CRA CAPITAL PROJECTS	$ 1,028,677	$ 1,028,677
301 - GENERAL CAPITAL PROJECTS	$ 415,000	$ 415,000
400 - WATER & SEWER	$ 8,414,650	$ 8,414,650
407 - WATER & SEWER R & R	$ 2,912,574	$ 2,912,574
460 - STORMWATER	$ 1,395,913	$ 1,395,913
461 - STORMWATER CAPITAL	$ 674,000	$ 674,000
495 - SOLID WASTE	$ 3,137,004	$ 3,137,004
TOTAL ALL FUNDS:	$ 33,120,013	$ 33,120,013

Attachment: Holly Hill Budget FY23_24 SECOND HEARING (2023-R-52 : Final Budget Fiscal Year 2023

Attachment: Holly Hill Budget FY23_24 SECOND HEARING (2023-R-52 : Final Budget Fiscal Year 2023

HOLLY HILL
FLORIDA

GENERAL FUND (001)
REVENUE & EXPENDITURES

Budget FY 2023 - 2024

HOLLY HILL Holly Hill, FL

Budget Worksheet
Account Summary
For Fiscal: 2023-2024 Period Ending: 09/30/2024

		2021-2022 Total Budget	2021-2022 Total Activity	2022-2023 Total Budget	2022-2023 Total Activity	Defined Budgets 2023-2024 DEPT
Fund: 001 - GENERAL FUND						
Division: 0000 - UNDESIGNATED						
001-0000-311-1000	AD-VALOREM TAXES	3,090,236.00	3,034,340.86	3,402,424.00	3,302,139.01	3,802,726.00
Budget Detail						
Budget Code	Description			Units	Price	Amount
DEPT	6.25 MILS PER $1,000 @ 95% COLLECTION			0.00	0.00	-3,802,726.00
001-0000-311-2000	DELINQUENT AD-VALOREM TAX	5,000.00	167,083.71	5,000.00	200,088.81	5,000.00
001-0000-312-4100	1ST LOCAL OPTION FUEL TAXES	183,554.00	181,224.88	185,198.00	138,868.73	183,326.00
001-0000-312-5100	FIRE INS/FIRE PENSION	44,151.00	47,962.08	48,566.00	68,522.48	49,814.00
001-0000-312-5200	LOCAL OPTION TAXES / INS TAX...	139,910.00	146,675.87	153,901.00	166,619.43	146,676.00
001-0000-314-1000	ELECTRICITY UTILITY SERVICE T...	1,050,000.00	1,144,103.51	1,080,000.00	1,023,519.81	1,219,000.00
001-0000-314-3000	WATER UTILITY TAX	330,000.00	373,362.11	345,000.00	345,400.47	398,000.00
001-0000-314-4000	NATURAL GAS UTILITY TAX	16,000.00	15,614.74	16,000.00	12,054.45	16,000.00
001-0000-314-8000	PROPANE UTILITY TAX	16,000.00	17,816.14	17,000.00	14,700.18	18,000.00
001-0000-315-1000	TELECOMMUNICATION TAX	372,704.00	382,202.40	382,278.00	296,924.26	406,184.00
001-0000-316-0000	LOCAL BUSINESS TAX	190,000.00	193,888.26	200,000.00	266,450.43	191,000.00
001-0000-323-1000	FRANCHISE FEES-ELECTRICITY	740,000.00	889,589.34	755,000.00	658,191.74	808,000.00
001-0000-323-4000	GAS	23,000.00	22,767.06	23,000.00	19,902.48	23,000.00
001-0000-323-9100	TOWING SERVICE	24,065.00	26,070.33	24,065.00	22,059.51	24,065.00
Budget Detail						
Budget Code	Description			Units	Price	Amount
DEPT	ARROW TOWING CONTRACT			0.00	0.00	-24,065.00
001-0000-329-1000	OTHER PERMITS AND FEES	3,400.00	3,950.00	2,900.00	4,270.00	3,400.00
001-0000-329-1010	GARAGE SALE PERMITS	1,000.00	895.00	900.00	775.00	800.00
001-0000-329-1020	APPLICATION FEE-BOPA	0.00	0.00	0.00	50.00	50.00
001-0000-329-1030	GOLF CART REGIST-RESIDENT	0.00	75.00	0.00	25.00	25.00
001-0000-329-1040	APPLICATION FEE-BTR(OL)	5,000.00	4,317.97	5,000.00	6,010.27	5,000.00

Attachment: Holly Hill Budget FY23_24 SECOND HEARING (2023-R-52 : Final Budget Fiscal Year 2023

Budget Worksheet

For Fiscal: 2023-2024 Period Ending: 09/30/2024

Defined Budgets

		2021-2022 Total Budget	2021-2022 Total Activity	2022-2023 Total Budget	2022-2023 Total Activity	2023-2024 DEPT
001-0000-329-1050	FOOD TRUCK DAILY PERMIT	150.00	250.00	200.00	50.00	200.00
001-0000-329-2000	FIRE INSPECTION FEES	28,000.00	30,059.00	27,000.00	51,004.99	46,000.00
001-0000-329-4010	PROCHAMPS	10,000.00	13,272.00	10,000.00	5,728.00	10,000.00
001-0000-331-2410	FEDERAL GRANTS	2,845.00	2,800.00	2,259.00	2,559.00	0.00
001-0000-331-2425	VOCA GRANT	52,663.00	53,055.05	59,562.00	39,852.14	50,590.00
001-0000-331-2500	US DOT/FL DOT	40,000.00	4,394.69	65,000.00	55,542.76	65,000.00
001-0000-334-4950	FDOT JPA	75,000.00	0.00	0.00	0.00	0.00
001-0000-335-1200	STATE SHARED REVENUES	510,565.00	610,423.32	543,570.00	609,673.98	616,653.00
001-0000-335-1400	MOBILE HOME LICENSES	14,500.00	17,852.00	14,500.00	14,206.91	16,000.00
001-0000-335-1500	ALCOHOL BEVERAGE TAX	11,000.00	11,193.09	11,000.00	9,276.63	11,000.00
001-0000-335-1800	LOCAL GOVT 1/2 CENT TAX	755,334.00	869,001.80	800,987.00	691,861.65	900,112.00
001-0000-335-2100	FIREFIGHTER SUPPL. COMP.	5,000.00	5,220.00	5,000.00	8,076.23	5,000.00
001-0000-338-2000	SHARED REV/OTHER LOCAL UN	11,000.00	11,517.36	10,000.00	7,160.84	10,000.00
001-0000-341-0130	COST ALLOCATION-CRA	59,878.00	68,773.00	92,445.00	92,445.00	98,893.00
001-0000-341-0400	COST ALLOCATION-W&S	917,115.00	978,715.00	1,188,443.00	1,188,443.00	1,195,636.00
001-0000-341-0460	STORMWATER	129,531.00	138,426.00	183,099.00	183,099.00	154,214.00
001-0000-341-0495	SOLID WASTE	279,613.00	293,623.00	329,620.00	329,620.00	339,748.00
001-0000-342-1010	COPIES/PD RPTS/OTHER	2,500.00	1,248.90	1,500.00	1,314.15	1,700.00
001-0000-342-1020	FINGERPRINTS/FALSE ALARMS	7,500.00	10,980.00	7,000.00	13,386.00	10,300.00
001-0000-342-2010	FALSE FIRE ALARMS	0.00	0.00	0.00	2,050.00	300.00
001-0000-342-2020	FIRE PLAN REVIEW FEES	1,500.00	3,065.00	2,000.00	1,140.00	2,000.00
001-0000-344-9010	FDOT MEDIAN MAINT	25,032.00	18,774.00	25,032.00	32,135.25	34,502.00
001-0000-344-9012	TRAFFIC SIGNAL MAINT-DOT	39,984.00	41,072.00	42,184.00	0.00	0.00
001-0000-344-9015	HWY LIGHTING MAINT - DOT	39,163.00	40,337.55	41,547.00	41,547.29	42,794.00
Budget Detail						
Budget Code	Description			Units	Price	Amount
DEPT	BASED ON CONTRACT			0.00	0.00	-42,794.00
001-0000-347-2100	CULTURE/RECREATION	3,800.00	4,476.60	4,000.00	5,535.00	4,200.00
001-0000-347-4300	PROMOTIONAL ACTIVITY	800.00	687.52	600.00	681.91	300.00
001-0000-347-5300	SICA HALL REVENUES	9,000.00	19,285.00	12,750.00	12,430.00	13,000.00
001-0000-349-2000	LAND DEV (BOPA)	1,000.00	500.00	700.00	300.00	800.00

Attachment: Holly Hill Budget FY23_24 SECOND HEARING (2023-R-52 : Final Budget Fiscal Year 2023

Budget Worksheet

For Fiscal: 2023-2024 Period Ending: 09/30/2024

		2021-2022 Total Budget	2021-2022 Total Activity	2022-2023 Total Budget	2022-2023 Total Activity	Defined Budgets 2023-2024 DEPT
001-0000-349-2010	COMP PLAN AMENDMENTS	2,000.00	7,000.00	4,000.00	4,000.00	4,500.00
001-0000-349-2020	REZONING	3,750.00	9,700.00	4,500.00	5,400.00	5,500.00
001-0000-349-2050	SUBDIVISION	0.00	9,200.00	0.00	0.00	0.00
001-0000-349-2071	RESIDENTIAL VARIANCE	450.00	700.00	600.00	1,050.00	700.00
001-0000-349-2080	ZONING VERIFICATION LETTR	1,000.00	2,375.00	1,300.00	1,575.00	1,000.00
001-0000-349-2100	PASS-THRU LEG.ADS,ADV,LEG	500.00	1,008.23	1,400.00	0.00	500.00
001-0000-349-4000	CERTIFICATN/COPIES/RESRCH	10,000.00	14,300.60	12,000.00	11,001.41	12,400.00
001-0000-349-4010	CERTIFICATN/COPIES/RESRCH /...	400.00	463.41	340.00	605.85	400.00
001-0000-349-5030	LAND DEVELOPMENT-OTHER	9,000.00	6,919.50	8,800.00	5,400.00	2,000.00
001-0000-349-5040	SPECIAL EXCEPTION	0.00	500.00	0.00	1,500.00	0.00
001-0000-351-2000	CIRCUIT COURT-CRIMINAL	6,000.00	12,070.75	8,900.00	15,966.67	9,900.00
001-0000-351-2030	POLICE EDUCATION	175.00	241.00	200.00	224.00	200.00
001-0000-351-5000	TRAFFIC COURT	9,000.00	26,340.51	16,600.00	19,066.85	16,600.00
001-0000-351-5030	POLICE EDUCATION	900.00	3,142.00	1,900.00	2,674.00	2,000.00
001-0000-351-9000	OTHER	0.00	3.00	0.00	25.75	0.00
001-0000-354-0000	LOCAL ORDINANCE VIOLATION	500.00	767.55	300.00	2,750.00	1,300.00
001-0000-354-1010	CODE VIOLATION FEES	25,000.00	81,166.44	24,000.00	38,300.53	35,000.00
001-0000-354-1020	PER DAY FINES	0.00	73,471.34	0.00	88,900.17	5,000.00
001-0000-354-1030	SPECIAL MASTER FEE	4,500.00	11,479.18	6,200.00	7,550.00	5,000.00
001-0000-361-1000	INTEREST & OTHER EARNINGS	600.00	-8,536.00	600.00	9,529.08	2,660.00
001-0000-361-1500	INVESTMENT EARNINGS	25,000.00	39,055.41	24,000.00	187,023.38	73,217.00
001-0000-361-3010	INCR/DECR FAIR VAL-INVEST	0.00	-6,312.30	0.00	0.00	0.00
001-0000-362-5000	RENTS & LEASE	4,200.00	3,440.34	4,200.00	0.00	0.00
001-0000-364-4100	DISPOS. OF FIXED ASSETS	0.00	32,185.00	0.00	6,974.07	0.00
001-0000-365-1000	SALE OF SURPLUS MATERIALS	0.00	1,146.95	0.00	0.00	0.00
001-0000-366-9000	CNTRB & DON/PRIV SOURCE	0.00	0.00	-2,500.00	4,550.00	0.00
001-0000-366-9040	SAFETY GRANT-INS SPONSR'D	5,000.00	5,000.00	5,000.00	5,000.00	5,000.00
001-0000-367-1001	OTHER LICENSES	0.00	105.00	0.00	15.00	0.00
001-0000-369-2010	COLLECTION FEES ADMIN	1,000.00	-350.00	400.00	0.00	0.00
001-0000-369-2020	COLLECTION AGENCY FEES	1,000.00	-16.73	300.00	0.00	0.00
001-0000-369-3030	SETTLEMENTS	0.00	11,098.76	0.00	41,503.00	0.00

Attachment: Holly Hill Budget FY23_24 SECOND HEARING (2023-R-52 : Final Budget Fiscal Year 2023

Budget Worksheet

For Fiscal: 2023-2024 Period Ending: 09/30/2024

		2021-2022 Total Budget	2021-2022 Total Activity	2022-2023 Total Budget	2022-2023 Total Activity	2023-2024 DEPT
				Defined Budgets		
001-0000-369-8010	REBATES,REFUNDS,DISCOUNTS	8,500.00	12,045.96	9,500.00	11,646.48	7,500.00
001-0000-369-9000	MISC REVENUES	5,000.00	2,361.61	7,600.00	6,561.61	2,000.00
001-0000-381-0101	TRANSFER-LAW ENF IMPACT F...	47,200.00	47,200.00	15,900.00	15,900.00	0.00
001-0000-381-0110	TRANSFER FRM LETF	15,900.00	15,900.00	0.00	0.00	0.00
001-0000-381-0115	HURRICANE IRMA	0.00	250,000.00	0.00	0.00	0.00
001-0000-381-0130	TRANSFER FRM COMM REDEV...	8,580.00	8,580.00	8,580.00	8,580.00	9,923.00
Budget Detail						
Budget Code	Description			Units	Price	Amount
DEPT	FLEET			1.00	-9,923.00	-9,923.00
001-0000-381-0400	TRANSFER FRM ENTERPRISE	283,535.00	283,535.00	218,922.00	218,922.00	0.00
001-0000-381-0460	TRANSFER FRM STORMWATER	23,400.00	23,400.00	23,400.00	23,400.00	0.00
001-0000-381-9006	TRANSFER FRM HOLLY HILL PAL	600.00	600.00	0.00	0.00	0.00
001-0000-389-1000	PRIOR YEAR CARRYOVER	5,186,109.00	0.00	384,229.00	0.00	0.00
	Division: 0000 - UNDESIGNATED Total:	14,955,292.00	10,882,228.65	10,917,401.00	10,691,286.64	11,131,308.00
Division: 1101 - COMMISSION						
001-1101-511-1200	REGULAR SALARIES	44,170.00	44,169.03	44,000.00	41,461.33	44,000.00
Budget Detail						
Budget Code	Description			Units	Price	Amount
DEPT	COMMISSIONERS 4			4.00	0.00	
DEPT	GOVERMENT OFFICIALS REGULAR SALARIES TOTAL			0.00	0.00	44,000.00
DEPT	MAYOR 1			1.00	0.00	
001-1101-511-2100	FICA/MEDICARE TAXES	3,400.00	1,555.08	2,000.00	1,455.50	3,400.00
001-1101-511-2300	LIFE & HEALTH INSURANCE	44,230.00	35,652.42	46,500.00	35,222.52	47,510.00
Budget Detail						
Budget Code	Description			Units	Price	Amount
DEPT	HEALTH INSURANCE			5.00	9,460.00	47,300.00
DEPT	LIFE INSURANCE			5.00	42.00	210.00
001-1101-511-2400	WORKERS COMP INSURANCE	100.00	35.84	100.00	37.73	440.00
Budget Detail						
Budget Code	Description			Units	Price	Amount
DEPT	WORKERS COMP			0.00	0.00	440.00
001-1101-511-4001	TRAVEL & PER DIEM	4,800.00	597.00	4,800.00	1,753.02	4,800.00

Attachment: Holly Hill Budget FY23_24 SECOND HEARING (2023-R-52 : Final Budget Fiscal Year 2023

Budget Worksheet

For Fiscal: 2023-2024 Period Ending: 09/30/2024

Defined Budgets

		2021-2022 Total Budget	2021-2022 Total Activity	2022-2023 Total Budget	2022-2023 Total Activity	2023-2024 DEPT
Budget Detail						
Budget Code	Description			Units	Price	Amount
DEPT	FLC CONFERENCE			0.00	0.00	4,800.00
001-1101-511-4200	POSTAGE, FRT, EXPRESS	100.00	0.00	100.00	0.00	100.00
Budget Detail						
Budget Code	Description			Units	Price	Amount
DEPT	CARDS AND LETTERS			0.00	0.00	100.00
001-1101-511-4500	INSURANCE/NON-EMPLOYEE	20,807.00	20,790.02	26,250.00	26,204.12	28,992.00
Budget Detail						
Budget Code	Description			Units	Price	Amount
DEPT	BROWN & BROWN PACKAGE POLICY			0.00	0.00	28,992.00
001-1101-511-4700	PRINTING & BINDING	500.00	49.00	500.00	0.00	500.00
Budget Detail						
Budget Code	Description			Units	Price	Amount
DEPT	BUSINESS CARD, NEWLY ELECTED PHOTO			0.00	0.00	500.00
001-1101-511-4901	OTHER CHARGES	87.00	0.00	200.00	70.00	200.00
Budget Detail						
Budget Code	Description			Units	Price	Amount
DEPT	MISC, CHARGES			0.00	0.00	200.00
001-1101-511-5205	MEETING EXPENSE	544.00	543.63	500.00	388.80	500.00
Budget Detail						
Budget Code	Description			Units	Price	Amount
DEPT	REFRESHMENTS COMMISSION MEETINGS			0.00	0.00	500.00
001-1101-511-5220	CLOTHING & EQUIPMENT	377.00	127.80	250.00	0.00	650.00
Budget Detail						
Budget Code	Description			Units	Price	Amount
DEPT	COMISSION POLO SHIRTS			0.00	0.00	650.00
001-1101-511-5400	BOOKS/PUBL/SUBSCR/MEMBE...	6,200.00	3,636.00	6,200.00	4,546.00	5,500.00
Budget Detail						
Budget Code	Description			Units	Price	Amount
DEPT	FLORIDA LEAGUE OF CITIES			0.00	0.00	2,000.00
DEPT	LEAGUE OF MAYORS			0.00	0.00	500.00
DEPT	R2C TPO			0.00	0.00	2,000.00

Attachment: Holly Hill Budget FY23_24 SECOND HEARING (2023-R-52 : Final Budget Fiscal Year 2023

Budget Worksheet

For Fiscal: 2023-2024 Period Ending: 09/30/2024

Defined Budgets

		2021-2022 Total Budget	2021-2022 Total Activity	2022-2023 Total Budget	2022-2023 Total Activity	2023-2024 DEPT
DEPT	VOLUSIA LEAGUE OF CITIES			0.00	0.00 1,000.00	
001-1101-511-5501	TRAINING & EDUCATION COST	4,992.00	440.00	2,000.00	203.00	2,000.00
Budget Detail						
Budget Code	Description			Units	Price Amount	
DEPT	VOLUSIA DAYS			0.00	0.00 800.00	
DEPT	VOLUSIA LOC DINNERS			0.00	0.00 1,200.00	
001-1101-511-8200	GRANTS & AID	55,000.00	55,000.00	42,500.00	27,500.00	40,000.00
Budget Detail						
Budget Code	Description			Units	Price Amount	
DEPT	FIRST STEP SHELTER			0.00	0.00 25,000.00	
DEPT	HOPE PLACE			0.00	0.00 15,000.00	
	Division: 1101 - COMMISSION Total:	185,307.00	162,595.82	175,900.00	138,842.02	178,592.00
Division: 1201 - CITY MANAGER						
001-1201-512-1200	REGULAR SALARIES & WAGE	224,450.00	224,448.16	228,500.00	215,672.48	244,515.00
Budget Detail						
Budget Code	Description			Units	Price Amount	
DEPT	CITY CLERK			1.00	0.00 0.00	
DEPT	CITY MANAGER			1.00	0.00 0.00	
DEPT	CITY MGR & PERSONNEL REG SALARIES & WAGES TOTAL			0.00	0.00 244,515.00	
001-1201-512-1510	INCENTIVE PAY	603.00	602.50	600.00	562.50	600.00
Budget Detail						
Budget Code	Description			Units	Price Amount	
DEPT	CELL PHONE ALLOWANCE			24.00	25.00 600.00	
001-1201-512-1520	UNIFORM ALLOWANCE	200.00	200.00	200.00	200.00	200.00
Budget Detail						
Budget Code	Description			Units	Price Amount	
DEPT	CITY CLERK			0.00	0.00 200.00	
001-1201-512-1540	CAR ALLOWANCE	6,050.00	6,050.00	6,000.00	5,750.00	6,000.00
Budget Detail						
Budget Code	Description			Units	Price Amount	
DEPT	CITY MANAGER - CELL/AUTO			12.00	500.00 6,000.00	
001-1201-512-2100	FICA TAXES	16,497.00	16,073.29	18,000.00	15,531.39	19,230.00

Attachment: Holly Hill Budget FY23_24 SECOND HEARING (2023-R-52 : Final Budget Fiscal Year 2023

Budget Worksheet

For Fiscal: 2023-2024 Period Ending: 09/30/2024

Defined Budgets

		2021-2022 Total Budget	2021-2022 Total Activity	2022-2023 Total Budget	2022-2023 Total Activity	2023-2024 DEPT
Budget Detail						
Budget Code	Description			Units	Price	Amount
DEPT	CITY MANAGER DEPT			1.00	19,230.00	19,230.00
001-1201-512-2200	RETIREMENT CONTRIBUTION	55,450.00	55,447.08	59,500.00	57,477.97	69,420.00
001-1201-512-2300	LIFE & HEALTH INSURANCE	19,950.00	18,643.85	23,800.00	18,389.55	19,590.00
Budget Detail						
Budget Code	Description			Units	Price	Amount
DEPT	HEALTH INSURANCE			2.00	9,460.00	18,920.00
DEPT	LIFE INSURANCE - CITY CLERK			1.00	280.00	280.00
DEPT	LIFE INSURANCE - CITY MANAGER			1.00	390.00	390.00
001-1201-512-2400	WORKERS COMP INSURANCE	200.00	179.04	200.00	190.69	2,430.00
Budget Detail						
Budget Code	Description			Units	Price	Amount
DEPT	WORKERS COMP			0.00	0.00	2,430.00
001-1201-512-3150	LEGAL/OFFICIAL ADVERTISNG	17,150.00	17,122.69	15,000.00	6,126.26	12,000.00
Budget Detail						
Budget Code	Description			Units	Price	Amount
DEPT	CLERK OF COURT			0.00	0.00	4,000.00
DEPT	NEWS JOURNAL ADVERTISING			0.00	0.00	8,000.00
001-1201-512-3400	OTHER SERVICES	34,000.00	31,364.63	78,000.00	75,546.68	15,000.00
Budget Detail						
Budget Code	Description			Units	Price	Amount
DEPT	IRON MOUNTAIN			0.00	0.00	10,000.00
DEPT	MUNICODE			0.00	0.00	5,000.00
001-1201-512-4001	TRAVEL & PER DIEM	150.00	0.00	2,300.00	444.64	2,000.00
Budget Detail						
Budget Code	Description			Units	Price	Amount
DEPT	FCCMA			0.00	0.00	1,000.00
DEPT	FLC ANNUAL CONFERENCE MILAGE PLUS 3 NIGHTS			0.00	0.00	1,000.00
001-1201-512-4200	POSTAGE, FRT, EXPRESS	500.00	489.06	800.00	333.27	600.00
Budget Detail						
Budget Code	Description			Units	Price	Amount
DEPT	PITNEY BOSE, FREIGHT & EXPENSES			0.00	0.00	600.00

Attachment: Holly Hill Budget FY23_24 SECOND HEARING (2023-R-52 : Final Budget Fiscal Year 2023

Budget Worksheet

For Fiscal: 2023-2024 Period Ending: 09/30/2024

Defined Budgets

		2021-2022 Total Budget	2021-2022 Total Activity	2022-2023 Total Budget	2022-2023 Total Activity	2023-2024 DEPT
001-1201-512-4400	RENTALS & LEASES	700.00	597.36	700.00	423.54	700.00
Budget Detail						
Budget Code	Description			Units	Price	Amount
DEPT	COPIER LEASE			0.00	0.00	700.00
001-1201-512-4500	INSURANCE/NON-EMPLOYEE	2,779.00	2,776.67	3,496.00	3,489.72	5,531.00
Budget Detail						
Budget Code	Description			Units	Price	Amount
DEPT	BROWN & BROWN PACKAGE POLICY			0.00	0.00	5,531.00
001-1201-512-4600	REPAIRS & MAINTENANCE	600.00	0.00	600.00	0.00	500.00
Budget Detail						
Budget Code	Description			Units	Price	Amount
DEPT	SERVICE PITNEY BOWES ENVELOPE MACHINE			1.00	500.00	500.00
001-1201-512-4611	MAINTENANCE CONTRACTS	700.00	509.15	700.00	293.16	700.00
Budget Detail						
Budget Code	Description			Units	Price	Amount
DEPT	COPIER LEASE			1.00	700.00	700.00
001-1201-512-4700	PRINTING & BINDING	1,000.00	988.00	1,000.00	547.00	1,000.00
Budget Detail						
Budget Code	Description			Units	Price	Amount
DEPT	STATIONARY, ENVELOPES, BUSINESS CARDS, PLANNER			0.00	0.00	1,000.00
001-1201-512-4800	PROMO.ADVERTISING ACTIV.	1,220.00	0.00	1,220.00	0.00	1,000.00
Budget Detail						
Budget Code	Description			Units	Price	Amount
DEPT	MISC. PROMOTIONAL			0.00	0.00	1,000.00
001-1201-512-4810	PROMO ACT.-SPECIAL EVENTS	1,500.00	0.00	1,500.00	0.00	1,200.00
Budget Detail						
Budget Code	Description			Units	Price	Amount
DEPT	SPECIAL EVENTS - CHRISTMAS, HALLOWEEN, EASTER,			0.00	0.00	1,200.00
001-1201-512-4901	OTHER CHARGES	6,500.00	5,600.00	6,500.00	6,500.00	6,500.00

Attachment: Holly Hill Budget FY23_24 SECOND HEARING (2023-R-52 : Final Budget Fiscal Year 2023

Budget Worksheet

For Fiscal: 2023-2024 Period Ending: 09/30/2024

		2021-2022 Total Budget	2021-2022 Total Activity	2022-2023 Total Budget	2022-2023 Total Activity	Defined Budgets 2023-2024 DEPT
Budget Detail						
Budget Code	Description			Units	Price	Amount
DEPT	EMPLOYEE APPRECIATION HOLIDAY GIFT CARD			0.00	0.00	6,500.00
001-1201-512-4960	ELECTION EXPENSE	1,027.00	0.00	4,000.00	0.00	12,000.00
Budget Detail						
Budget Code	Description			Units	Price	Amount
DEPT	ELECTION EXPENSE			0.00	0.00	12,000.00
001-1201-512-5100	OFFICE SUPPLIES	2,973.00	2,972.58	2,000.00	636.60	1,200.00
Budget Detail						
Budget Code	Description			Units	Price	Amount
DEPT	OFFICE SUPPLIES			0.00	0.00	1,200.00
001-1201-512-5205	MEETING EXPENSE	300.00	0.00	300.00	24.88	300.00
Budget Detail						
Budget Code	Description			Units	Price	Amount
DEPT	STUDENT GOVERMENT DAY			0.00	0.00	300.00
001-1201-512-5400	BOOKS/PUBL/SUBSCR/MEMBE...	3,118.00	3,072.48	3,274.00	2,303.83	3,045.00
Budget Detail						
Budget Code	Description			Units	Price	Amount
DEPT	FACC - CITY CLERK			0.00	0.00	75.00
DEPT	FCCMA - CITY MANAGER			0.00	0.00	500.00
DEPT	FLORIDA NOTARY ASSC. - CITY CLERK			0.00	0.00	100.00
DEPT	ICMA DUES - CITY MANAGER			0.00	0.00	1,100.00
DEPT	IIMC - CITY CLERK			0.00	0.00	170.00
DEPT	NEWS JOURNAL			0.00	0.00	100.00
DEPT	VOLUSIA LEAGUE OF CITIES			0.00	0.00	1,000.00
001-1201-512-5501	TRAINING & EDUCATION COST	2,340.00	150.00	2,340.00	1,169.95	2,040.00
Budget Detail						
Budget Code	Description			Units	Price	Amount
DEPT	FCCMA CONFERENCE			0.00	0.00	400.00
DEPT	FCCMA SYMPOSIUM; FCCMA WINTER INST; DISTRICT CLASS			0.00	0.00	500.00
DEPT	FLC CONFERENCE REGISTRATION			0.00	0.00	400.00
DEPT	FLORIDA ASSC. OF CITY CLERK WEBINARS			0.00	0.00	200.00
DEPT	IIMC - ONLINE COURSES FOR MCC CERTIFICATION			0.00	0.00	240.00

Attachment: Holly Hill Budget FY23_24 SECOND HEARING (2023-R-52 : Final Budget Fiscal Year 2023

Budget Worksheet

For Fiscal: 2023-2024 Period Ending: 09/30/2024

Defined Budgets

		2021-2022 Total Budget	2021-2022 Total Activity	2022-2023 Total Budget	2022-2023 Total Activity	2023-2024 DEPT
DEPT	VLC/VCARD DINNERS & MISC EVENTS			0.00	0.00 300.00	
001-1201-514-3101	PROFESSIONAL SERVICES	100,000.00	58,177.28	160,666.00	89,602.67	150,000.00
Budget Detail						
Budget Code	Description			Units	Price Amount	
DEPT	LEGAL			0.00	0.00 100,000.00	
DEPT	LOBBYIST			0.00	0.00 50,000.00	
	Division: 1201 - CITY MANAGER Total:	499,957.00	445,463.82	621,196.00	501,216.78	577,301.00
Division: 1301 - ACCOUNTING						
001-1301-513-1200	REGULAR SALARIES & WAGE	441,274.00	381,640.72	499,600.00	333,356.12	457,025.00
Budget Detail						
Budget Code	Description			Units	Price Amount	
DEPT	ACCOUNTANT			1.00	0.00	
DEPT	ASSISTANT FINANCE DIRECTOR			1.00	0.00	
DEPT	FINANCE CLERK II			1.00	0.00	
DEPT	FINANCE CLERK III			1.00	0.00	
DEPT	FINANCE DIRECTOR			1.00	0.00	
DEPT	FINANCE REGULAR SALARIES & WAGE TOTAL			0.00	0.00 457,025.00	
DEPT	PAYROLL COORDINATOR			1.00	0.00	
DEPT	PURCHASING AGENT			1.00	0.00	
001-1301-513-1300	OTHER SALARIES & WAGES	29,788.00	29,787.11	0.00	150.12	0.00
001-1301-513-1400	OVERTIME	535.00	123.69	600.00	229.41	865.00
001-1301-513-1510	INCENTIVE PAY	940.00	940.00	600.00	1,125.00	1,200.00
Budget Detail						
Budget Code	Description			Units	Price Amount	
DEPT	CELL PHONE			2.00	600.00 1,200.00	
001-1301-513-1520	UNIFORM ALLOWANCE	1,400.00	1,000.00	1,400.00	1,200.00	1,400.00
Budget Detail						
Budget Code	Description			Units	Price Amount	
DEPT	CLOTHING ALLOWANCE			7.00	200.00 1,400.00	
001-1301-513-2100	FICA/MEDICARE TAXES	36,500.00	31,285.75	36,500.00	25,646.22	35,270.00
001-1301-513-2200	RETIREMENT CONTRIBUTION	76,963.00	76,962.66	75,800.00	63,760.29	86,150.00
001-1301-513-2300	LIFE & HEALTH INSURANCE	73,900.00	53,299.05	82,700.00	47,935.81	67,950.00

Attachment: Holly Hill Budget FY23_24 SECOND HEARING (2023-R-52 : Final Budget Fiscal Year 2023

Budget Worksheet

For Fiscal: 2023-2024 Period Ending: 09/30/2024

		2021-2022 Total Budget	2021-2022 Total Activity	2022-2023 Total Budget	2022-2023 Total Activity	Defined Budgets 2023-2024 DEPT
Budget Detail						
Budget Code	Description			Units	Price	Amount
DEPT	HEALTH INSURANCE			7.00	9,460.00	66,220.00
DEPT	LIFE INSURANCE			0.00	0.00	1,730.00
001-1301-513-2400	WORKERS COMP INSURANCE	500.00	221.55	500.00	535.71	4,580.00
001-1301-513-3200	ACCOUNTING & AUDITING	73,950.00	63,510.00	87,940.00	66,860.00	91,700.00
Budget Detail						
Budget Code	Description			Units	Price	Amount
DEPT	ANNUAL AUDIT AND FIN CONSULT SERV			0.00	0.00	77,600.00
DEPT	GFOA CERTIFICATE OF AWARD			0.00	0.00	500.00
DEPT	OTHER SERVICES			0.00	0.00	5,000.00
DEPT	SINGLE AUDIT			2.00	4,300.00	8,600.00
001-1301-513-3400	OTHER SERVICES	20,474.00	8,618.48	11,000.00	0.00	2,500.00
001-1301-513-4001	TRAVEL & PER DIEM	896.00	142.13	2,720.00	374.78	4,160.00
Budget Detail						
Budget Code	Description			Units	Price	Amount
DEPT	FGFOA CONFERENCE ETC (1 STAFF) TRAVEL			1.00	1,360.00	1,360.00
DEPT	GFOA CONFERENCE			1.00	1,600.00	1,600.00
DEPT	SCHOOL OF GOVT FINANCE - 1 ACCOUNTANT			1.00	1,200.00	1,200.00
001-1301-513-4200	POSTAGE, FRT, EXPRESS	2,904.00	2,903.74	1,800.00	1,622.18	1,500.00
001-1301-513-4400	RENTALS & LEASES	2,200.00	2,068.68	2,200.00	1,356.93	2,200.00
Budget Detail						
Budget Code	Description			Units	Price	Amount
DEPT	COPIER LEASE			0.00	0.00	2,200.00
001-1301-513-4500	INSURANCE/CLAIMS	10,282.00	10,273.71	12,236.00	12,214.00	19,359.00
Budget Detail						
Budget Code	Description			Units	Price	Amount
DEPT	BROWN & BROWN PACKAGE POLICY			0.00	0.00	19,359.00
001-1301-513-4611	MAINTENANCE CONTRACTS	9,420.00	9,280.59	8,500.00	6,288.61	1,400.00
Budget Detail						
Budget Code	Description			Units	Price	Amount
DEPT	COPIER			0.00	0.00	1,400.00
001-1301-513-4700	PRINTING & BINDING	670.00	524.36	700.00	49.00	200.00

Attachment: Holly Hill Budget FY23_24 SECOND HEARING (2023-R-52 : Final Budget Fiscal Year 2023

Budget Worksheet

For Fiscal: 2023-2024 Period Ending: 09/30/2024

Defined Budgets

		2021-2022 Total Budget	2021-2022 Total Activity	2022-2023 Total Budget	2022-2023 Total Activity	Total Budget	2023-2024 DEPT
Budget Detail							
Budget Code	Description			Units	Price	Amount	
DEPT	ANNUAL FINANCIAL REPORT COVERS			0.00	0.00	100.00	
DEPT	BUSINESS CARDS, MISC PRINTING			0.00	0.00	100.00	
001-1301-513-4901	OTHER CHARGES	100.00	60.00	100.00	3,446.05		100.00
001-1301-513-4959	BAD DEBT EXPENSE	0.00	-137.23	0.00	0.00		0.00
001-1301-513-5100	OFFICE SUPPLIES	4,940.00	4,939.34	2,700.00	3,560.69		2,700.00
Budget Detail							
Budget Code	Description			Units	Price	Amount	
DEPT	MICR TONER			0.00	0.00	700.00	
DEPT	OTHER			0.00	0.00	2,000.00	
001-1301-513-5201	OPERATING SUPPLIES	2,300.00	2,117.78	1,000.00	760.51		700.00
Budget Detail							
Budget Code	Description			Units	Price	Amount	
DEPT	CHECK STOCK			1.00	400.00	400.00	
DEPT	W2 FORMS			1.00	300.00	300.00	
001-1301-513-5202	COMPUTERS	955.00	954.36	0.00	0.00		0.00
001-1301-513-5400	BOOKS/PUBL/SUBSCR/MEMBE...	860.00	729.00	1,020.00	1,043.23		1,259.00
Budget Detail							
Budget Code	Description			Units	Price	Amount	
DEPT	CMA MEMBERSHIP			1.00	299.00	299.00	
DEPT	FGFOA MEMBERSHIP (3)			0.00	0.00	210.00	
DEPT	GAAFR E-VERSION			0.00	0.00	140.00	
DEPT	GFOA MEMBERSHIP			0.00	0.00	210.00	
DEPT	GFOA PUBLICATIONS			0.00	0.00	200.00	
DEPT	MISC PUBLICATIONS			0.00	0.00	200.00	
001-1301-513-5501	TRAINING & EDUCATION COST	2,190.00	706.00	3,840.00	1,193.00		3,205.00
Budget Detail							
Budget Code	Description			Units	Price	Amount	
DEPT	FGFOA BEGGINER BOOT CAMP			1.00	440.00	440.00	
DEPT	FGFOA CONFERENCE REGISTRATION			0.00	0.00	570.00	
DEPT	FGFOA REVIEW, TESTING (N PEREZ)			1.00	425.00	425.00	
DEPT	GFOA CONFERENCE REGISTRATION			0.00	0.00	570.00	
DEPT	WEB BASED TRAINING (6 CLASSES)			0.00	0.00	1,200.00	
	Division: 1301 - ACCOUNTING Total:	793,941.00	681,951.47	833,456.00	572,707.66		785,523.00

Attachment: Holly Hill Budget FY23_24 SECOND HEARING (2023-R-52 : Final Budget Fiscal Year 2023

Budget Worksheet

For Fiscal: 2023-2024 Period Ending: 09/30/2024

Defined Budgets

		2021-2022 Total Budget	2021-2022 Total Activity	2022-2023 Total Budget	2022-2023 Total Activity	2023-2024 DEPT
Division: 1303 - CUSTOMER SERVICE						
001-1303-513-1200	REGULAR SALARIES & WAGES	141,015.00	140,569.49	165,000.00	141,793.93	170,165.00
Budget Detail						
Budget Code	Description			Units	Price	Amount
DEPT	CUSTOMER SERVICE SUPERVISOR			1.00	0.00	0.00
DEPT	FINANCE CLERK I			2.00	0.00	0.00
DEPT	FINANCE CLERK IV			1.00	0.00	0.00
DEPT	REGULAR SALARIES & WAGES			1.00	170,165.00	170,165.00
001-1303-513-1300	OTHER SALARIES & WAGES	3,100.00	3,045.20	0.00	0.00	0.00
001-1303-513-1400	OVERTIME	1,200.00	313.32	1,200.00	221.00	1,847.00
001-1303-513-1520	UNIFORM ALLOWANCE	400.00	400.00	400.00	400.00	400.00
001-1303-513-2100	FICA/MEDICARE TAXES	11,100.00	10,807.77	12,600.00	10,369.55	13,210.00
001-1303-513-2200	RETIREMENT CONTRIBUTION	16,045.00	16,044.26	20,000.00	17,031.75	23,360.00
001-1303-513-2300	LIFE & HEALTH INSURANCE	41,155.00	35,251.89	47,000.00	31,359.78	38,480.00
Budget Detail						
Budget Code	Description			Units	Price	Amount
DEPT	HEALTH INSURANCE			4.00	9,460.00	37,840.00
DEPT	LIFE INSURANCE			0.00	0.00	640.00
001-1303-513-2400	WORKERS COMP INSURANCE	200.00	115.37	200.00	177.73	1,730.00
001-1303-513-2500	UNEMPLOYMENT COMP	2,740.00	2,738.99	0.00	1,696.60	0.00
001-1303-513-3400	OTHER SERVICES	109,450.00	102,797.87	153,667.00	153,877.13	184,620.00
Budget Detail						
Budget Code	Description			Units	Price	Amount
DEPT	ENCO LATE NOTIFICATIONS FEES			12.00	425.00	5,100.00
DEPT	GLOBAL CREDIT CARD FEES			12.00	10,030.00	120,360.00
DEPT	POINT & PAY			12.00	1,860.00	22,320.00
DEPT	TYLER INCODE NOTICES			12.00	2,870.00	34,440.00
DEPT	UTILITY CREDIT CHECKS			12.00	200.00	2,400.00
001-1303-513-4200	POSTAGE, FRT, EXPRESS	29,500.00	20,726.35	29,500.00	21,946.82	29,500.00
Budget Detail						
Budget Code	Description			Units	Price	Amount
DEPT	UTILITY BILLINGS BULK MAIL			0.00	0.00	29,500.00
001-1303-513-4400	RENTALS & LEASES	2,600.00	2,492.68	2,600.00	1,356.94	2,600.00

Attachment: Holly Hill Budget FY23_24 SECOND HEARING (2023-R-52 : Final Budget Fiscal Year 2023

Budget Worksheet

For Fiscal: 2023-2024 Period Ending: 09/30/2024

Defined Budgets

		2021-2022 Total Budget	2021-2022 Total Activity	2022-2023 Total Budget	2022-2023 Total Activity	2023-2024 DEPT
Budget Detail						
Budget Code	Description			Units	Price	Amount
DEPT	COPIER LEASE			0.00	0.00	2,200.00
DEPT	PO BOX RENTAL			0.00	0.00	400.00
001-1303-513-4500	INSURANCE/CLAIMS	5,558.00	5,553.37	6,992.00	6,979.44	11,062.00
Budget Detail						
Budget Code	Description			Units	Price	Amount
DEPT	BROWN & BROWN PACKAGE POLICY			0.00	0.00	11,062.00
001-1303-513-4611	MAINTENANCE CONTRACTS	3,595.00	3,065.25	1,600.00	740.31	1,600.00
001-1303-513-4700	PRINTING & BINDING	14,888.00	13,543.19	10,900.00	7,462.83	10,900.00
Budget Detail						
Budget Code	Description			Units	Price	Amount
DEPT	DOOR KNOCKERS			0.00	0.00	500.00
DEPT	ENCO MAIL PROCESSING			0.00	0.00	10,400.00
001-1303-513-4959	OTHER CHARGES	12.00	11.54	0.00	0.00	0.00
001-1303-513-5100	OFFICE SUPPLIES	710.00	613.06	1,000.00	520.47	1,000.00
001-1303-513-5201	OPERATING SUPPLIES	421.00	241.74	0.00	71.90	0.00
001-1303-513-5202	COMPUTERS	2,985.00	2,985.00	0.00	0.00	0.00
001-1303-513-5220	CLOTHING & EQUIP	500.00	412.65	500.00	459.80	500.00
Budget Detail						
Budget Code	Description			Units	Price	Amount
DEPT	UNIFORM SHIRTS (5 EA X 4)			0.00	0.00	500.00
001-1303-513-5501	TRAINING & EDUCATION COST	300.00	0.00	600.00	0.00	600.00
	Division: 1303 - CUSTOMER SERVICE Total:	387,474.00	361,728.99	453,759.00	396,465.98	491,574.00
Division: 1306 - ADMIN SVCS/IT						
001-1306-516-1200	REGULAR SALARIES	83,857.00	83,856.41	86,400.00	82,468.05	94,164.00
Budget Detail						
Budget Code	Description			Units	Price	Amount
DEPT	REGULAR SALARIES & WAGES			1.00	94,164.00	94,164.00
001-1306-516-1510	INCENTIVE PAY	603.00	602.50	600.00	562.50	600.00
Budget Detail						
Budget Code	Description			Units	Price	Amount
DEPT	CELL PHONE ALLOWANCE			24.00	25.00	600.00

Attachment: Holly Hill Budget FY23_24 SECOND HEARING (2023-R-52 : Final Budget Fiscal Year 2023

Budget Worksheet

For Fiscal: 2023-2024 Period Ending: 09/30/2024

		2021-2022 Total Budget	2021-2022 Total Activity	2022-2023 Total Budget	2022-2023 Total Activity	Defined Budgets 2023-2024 DEPT
001-1306-516-1520	UNIFORM ALLOWANCE	200.00	200.00	200.00	200.00	200.00
001-1306-516-2100	FICA/MEDICARE TAXES	6,500.00	6,263.02	6,700.00	6,138.72	7,270.00
001-1306-516-2200	RETIREMENT CONTRIBUTION	9,191.00	9,190.04	10,300.00	10,152.86	12,780.00
001-1306-516-2300	LIFE & HEALTH INSURANCE	11,049.00	9,217.65	11,880.00	9,093.63	9,830.00

Budget Detail

Budget Code	Description	Units	Price	Amount
DEPT	HEALTH INSURANCE	1.00	9,460.00	9,460.00
DEPT	LIFE INSURANCE	0.00	0.00	370.00

001-1306-516-2400	WORKERS COMP INSURANCE	100.00	67.29	100.00	71.30	940.00
001-1306-516-3400	OTHER SERVICES	84,804.00	78,205.62	73,195.00	53,478.71	82,810.00

Budget Detail

Budget Code	Description	Units	Price	Amount
DEPT	ACCELLA	0.00	0.00	6,700.00
DEPT	ADOBE CREATIVE CLOUD	0.00	0.00	3,500.00
DEPT	AMAZON WEB SERVICES	0.00	0.00	6,000.00
DEPT	ANTIVIRUS SOFTWARE	0.00	0.00	3,000.00
DEPT	ANYDESK	0.00	0.00	500.00
DEPT	CISCO HARDWARE SUPPORT	0.00	0.00	9,000.00
DEPT	CODEJOCK	0.00	0.00	200.00
DEPT	ESRL-AESRL-ARCVIEW	0.00	0.00	1,200.00
DEPT	EXAGRID (DISC BACKUP APPLIANCE HW MAINT.)	0.00	0.00	3,500.00
DEPT	GO DADDY	0.00	0.00	600.00
DEPT	GOOGLE APPS	0.00	0.00	13,000.00
DEPT	HOSTGATOR WEB HOSTING	0.00	0.00	500.00
DEPT	INDIGO ROSE	0.00	0.00	200.00
DEPT	IPAD RMS MAINTENANCE	0.00	0.00	225.00
DEPT	PORTER LEE CORPORATION	0.00	0.00	1,000.00
DEPT	RMS	0.00	0.00	8,500.00
DEPT	RUCKUS WIRELESS	0.00	0.00	1,200.00
DEPT	SMARTSHEET	1.00	3,300.00	3,300.00
DEPT	SOFTWARE HOUSE INTERNATIONAL(SHI)	0.00	0.00	16,000.00
DEPT	VEAM BACKUP	0.00	0.00	2,000.00
DEPT	WASP BARCODE	3.00	895.00	2,685.00

001-1306-516-4001	TRAVEL & PER DIEM	400.00	41.77	2,300.00	1,414.30	2,300.00

Attachment: Holly Hill Budget FY23_24 SECOND HEARING (2023-R-52 : Final Budget Fiscal Year 2023

Budget Worksheet

For Fiscal: 2023-2024 Period Ending: 09/30/2024

Defined Budgets

		2021-2022 Total Budget	2021-2022 Total Activity	2022-2023 Total Budget	2022-2023 Total Activity	2023-2024 DEPT
Budget Detail						
Budget Code	Description			Units	Price	Amount
DEPT	FLGISA CONFERENCE			0.00	0.00	1,300.00
DEPT	TRAVEL PER DIEM			0.00	0.00	1,000.00
001-1306-516-4100	COMMUNICATION SERVICES	53,615.00	47,640.87	55,400.00	46,037.71	55,400.00
Budget Detail						
Budget Code	Description			Units	Price	Amount
DEPT	DEPT. OF MANAGEMENT SERVICES			0.00	0.00	1,200.00
DEPT	PUBLIC WIFI			0.00	0.00	2,200.00
DEPT	SPECTRUM			0.00	0.00	37,000.00
DEPT	VERIZON			0.00	0.00	15,000.00
001-1306-516-4200	POSTAGE, FRT, EXPRESS	2,200.00	1,678.19	200.00	16.86	200.00
001-1306-516-4400	RENTALS & LEASES	1,200.00	791.64	1,200.00	791.64	1,200.00
Budget Detail						
Budget Code	Description			Units	Price	Amount
DEPT	PITNEY BOWES MACHINE			12.00	100.00	1,200.00
001-1306-516-4420	OPERATING LEASE EXP	40,685.00	40,684.33	40,000.00	37,405.55	40,000.00
Budget Detail						
Budget Code	Description			Units	Price	Amount
DEPT	PHONE SYSTEM LEASE			0.00	0.00	40,000.00
001-1306-516-4500	INSURANCE/ NON EMPLOYEE	1,390.00	1,388.35	1,748.00	1,744.84	2,765.00
Budget Detail						
Budget Code	Description			Units	Price	Amount
DEPT	BROWN & BROWN PACKAGE POLICY			0.00	0.00	2,765.00
001-1306-516-4601	REPAIRS & MAINTENANCE	6,000.00	5,531.31	3,000.00	0.00	5,000.00
001-1306-516-4602	COMPUTERS/ACCESSORIES	2,500.00	2,432.97	3,000.00	109.98	3,000.00
001-1306-516-4611	MAINTENANCE CONTRACTS	187,967.00	184,771.55	190,212.00	189,118.38	91,352.00
Budget Detail						
Budget Code	Description			Units	Price	Amount
DEPT	GRANCIUS			0.00	0.00	7,080.00
DEPT	QUATRED			0.00	0.00	2,472.00
DEPT	TYLER TECHNOLOGIES			0.00	0.00	66,800.00
DEPT	TYLER TRAINING			0.00	0.00	15,000.00
001-1306-516-5100	OFFICE SUPPLIES	200.00	148.20	500.00	764.26	500.00

Attachment: Holly Hill Budget FY23_24 SECOND HEARING (2023-R-52 : Final Budget Fiscal Year 2023

Budget Worksheet

For Fiscal: 2023-2024 Period Ending: 09/30/2024

		2021-2022 Total Budget	2021-2022 Total Activity	2022-2023 Total Budget	2022-2023 Total Activity	Defined Budgets 2023-2024 DEPT
001-1306-516-5201	OPERATING SUPPLIES	549.00	364.17	249.00	210.41	249.00
001-1306-516-5202	COMPUTERS/ACCESSORIES	54,150.00	25,451.63	53,098.00	11,560.93	14,400.00
Budget Detail						
Budget Code	Description			Units	Price	Amount
DEPT	MONITORS, MISC COMPUTER SUPPLIES			0.00	0.00	3,000.00
DEPT	NEW SOFTWARE			0.00	0.00	4,000.00
DEPT	PD PRINTER			0.00	0.00	1,300.00
DEPT	PD SIGNATURE PADS			0.00	0.00	600.00
DEPT	UPS			0.00	0.00	2,500.00
DEPT	UPS BATTERIES			0.00	0.00	3,000.00
001-1306-516-5219	UNIFORM EXPENSE	0.00	0.00	0.00	0.00	200.00
001-1306-516-5264	MACH/EQUIP CAPITAL-LIKE	3,000.00	2,999.97	0.00	0.00	0.00
001-1306-516-5400	BOOKS/PUBL/SUBSCR/MEMBE...	300.00	200.00	300.00	217.56	300.00
001-1306-516-5501	TRAINING & EDUCATION COST	600.00	0.00	3,100.00	200.00	3,100.00
Budget Detail						
Budget Code	Description			Units	Price	Amount
DEPT	FLGISA REGISTRATION			0.00	0.00	300.00
DEPT	TRAINING			0.00	0.00	2,800.00
001-1306-516-6400	MACHINERY & EQUIPMENT	0.00	0.00	104,950.00	104,948.49	139,600.00
Budget Detail						
Budget Code	Description			Units	Price	Amount
DEPT	PC DESKTOP REPLACEMENT			13.00	1,200.00	15,600.00
DEPT	PD LAPTOP REPLACEMENT			0.00	0.00	102,000.00
DEPT	RUCKUS WIRELESS REPLACEMENT			0.00	0.00	22,000.00
	Division: 1306 - ADMIN SVCS/IT Total:	551,060.00	501,727.48	648,632.00	556,706.68	568,160.00
Division: 1310 - PERSONNEL						
001-1310-513-1200	REGULAR SALARIES	159,300.00	93,051.80	220,000.00	128,172.48	90,953.00
Budget Detail						
Budget Code	Description			Units	Price	Amount
DEPT	HUMAN RESOURCES MANAGER			1.00	90,953.00	90,953.00
001-1310-513-1510	INCENTIVE PAY	750.00	602.50	750.00	712.50	600.00
Budget Detail						
Budget Code	Description			Units	Price	Amount
DEPT	CELL PHONE ALLOWANCE			48.00	12.50	600.00

Attachment: Holly Hill Budget FY23_24 SECOND HEARING (2023-R-52 : Final Budget Fiscal Year 2023

Budget Worksheet

For Fiscal: 2023-2024 Period Ending: 09/30/2024

Defined Budgets

		2021-2022 Total Budget	2021-2022 Total Activity	2022-2023 Total Budget	2022-2023 Total Activity	2023-2024 DEPT
001-1310-513-1520	UNIFORM ALLOWANCE	200.00	200.00	200.00	200.00	200.00
001-1310-513-2100	FICA/MEDICARE TAXES	12,300.00	6,957.66	9,190.00	9,453.89	7,020.00
001-1310-513-2200	RETIREMENT CONTRIBUTION	29,900.00	17,128.14	34,500.00	35,083.27	31,400.00
001-1310-513-2300	LIFE & HEALTH INSURANCE	14,200.00	9,221.44	14,855.00	11,615.79	9,820.00

Budget Detail

Budget Code	Description	Units	Price	Amount
DEPT	HEALTH INSURANCE	1.00	9,460.00	9,460.00
DEPT	LIFE INSURANCE	0.00	0.00	360.00

001-1310-513-2400	WORKERS COMP INSURANCE	200.00	74.69	200.00	110.61	910.00
001-1310-513-2500	UNEMPLOYMENT COMP	0.00	0.00	0.00	450.24	20,000.00
001-1310-513-3101	PROFESSIONAL SERVICES	45,500.00	37,210.20	59,070.00	35,682.05	50,000.00

Budget Detail

Budget Code	Description	Units	Price	Amount
DEPT	CONSULTING FEE - BROWN & BROWN	0.00	0.00	35,000.00
DEPT	DRUG/ALCOHOL TESTS	0.00	0.00	2,500.00
DEPT	MEDICAL EXAMS	0.00	0.00	5,000.00
DEPT	PD PSYCH EVALUATIONS	0.00	0.00	3,000.00
DEPT	POLICE AND FIRE STRESS EKG TESTS	0.00	0.00	2,000.00
DEPT	RANDOM DRUG SCREENS	0.00	0.00	2,500.00

001-1310-513-3400	OTHER SERVICES	0.00	0.00	0.00	0.00	2,000.00

Budget Detail

Budget Code	Description	Units	Price	Amount
DEPT	CIVIC HR	1.00	2,000.00	2,000.00

001-1310-513-3430	EMPLOY ADS/JOB OPPORTUNIT	2,500.00	2,400.00	500.00	495.00	1,000.00
001-1310-513-4001	TRAVEL & PER DIEM	750.00	0.00	750.00	0.00	2,000.00
001-1310-513-4200	POSTAGE, FRT, EXPRESS	500.00	38.90	500.00	58.69	500.00
001-1310-513-4400	RENTALS & LEASES	700.00	597.36	700.00	423.56	700.00

Budget Detail

Budget Code	Description	Units	Price	Amount
DEPT	COPIER LEASE	0.00	0.00	700.00

001-1310-513-4500	INSURANCE/CLAIMS	1,737.00	1,735.43	2,185.00	2,181.08	2,766.00

Attachment: Holly Hill Budget FY23_24 SECOND HEARING (2023-R-52 : Final Budget Fiscal Year 2023

Budget Worksheet

For Fiscal: 2023-2024 Period Ending: 09/30/2024

		2021-2022 Total Budget	2021-2022 Total Activity	2022-2023 Total Budget	2022-2023 Total Activity	Defined Budgets 2023-2024 DEPT
Budget Detail						
Budget Code	Description			Units	Price	Amount
DEPT	BROWN & BROWN PACKAGE POLICY			0.00	0.00	2,766.00
001-1310-513-4611	MAINTENANCE CONTRACTS	4,150.00	4,099.90	4,650.00	4,151.92	4,650.00
Budget Detail						
Budget Code	Description			Units	Price	Amount
DEPT	CM COPIER MAINTENANCE FEE @ 25%			0.00	0.00	650.00
DEPT	ONLINE APPLICANT TRACKING SOFTWARE ANNUAL MAINTENA			0.00	0.00	4,000.00
001-1310-513-4929	OTHER CHARGES / OTHER PER...	1,550.00	642.80	1,550.00	690.00	1,550.00
Budget Detail						
Budget Code	Description			Units	Price	Amount
DEPT	EMPLOYEE/CORPORATE/CITIZEN OF THE YEAR PICTURES			0.00	0.00	750.00
DEPT	EMPLOYEE/CORPORATE/CITIZEN OF THE YEAR PLAQUES			0.00	0.00	300.00
DEPT	WELLNESS EVENTS			0.00	0.00	500.00
001-1310-513-5100	OFFICE SUPPLIES	0.00	0.00	0.00	94.99	750.00
001-1310-513-5400	BOOKS/PUBL/SUBSCR/MEMBE...	200.00	156.00	200.00	100.00	500.00
Budget Detail						
Budget Code	Description			Units	Price	Amount
DEPT	IPMA - HR INDIVIDUAL MEMBERSHIP			0.00	0.00	500.00
001-1310-513-5501	TRAINING & EDUCATION COST	4,000.00	2,073.72	4,450.00	2,724.80	4,450.00
Budget Detail						
Budget Code	Description			Units	Price	Amount
DEPT	SEMINARS ETC FOR NEW HR DIRECTOR			0.00	0.00	1,950.00
DEPT	TARGET SOLUTIONS ON-LINE TRAINING			0.00	0.00	2,500.00
001-1310-514-3101	PROFESSIONAL SERVICES	10,000.00	532.76	10,000.00	0.00	10,000.00
	Division: 1310 - PERSONNEL Total:	288,437.00	176,723.30	364,250.00	232,400.87	241,769.00

Attachment: Holly Hill Budget FY23_24 SECOND HEARING (2023-R-52 : Final Budget Fiscal Year 2023

Budget Worksheet

For Fiscal: 2023-2024 Period Ending: 09/30/2024

Defined Budgets

		2021-2022 Total Budget	2021-2022 Total Activity	2022-2023 Total Budget	2022-2023 Total Activity	2023-2024 DEPT
Division: 2110 - PUBLIC SAFETY						
001-2110-521-1200	REGULAR SALARIES & WAGE	1,475,150.00	1,302,427.83	1,481,562.00	1,324,872.47	1,595,211.00

Budget Detail

Budget Code	Description	Units	Price	Amount
DEPT	CAPTAIN	1.00	0.00	0.00
DEPT	CHIEF OF POLICE	1.00	0.00	0.00
DEPT	EVIDENCE/PROPERTY TECH	1.00	0.00	0.00
DEPT	OFFICE MANAGER	1.00	0.00	0.00
DEPT	POLICE OFFICER CID	1.00	0.00	0.00
DEPT	POLICE OFFICER CID I	1.00	0.00	0.00
DEPT	POLICE OFFICER CID II	1.00	0.00	0.00
DEPT	POLICE OFFICER CID III	1.00	0.00	0.00
DEPT	POLICE OFFICER PATROL	3.00	0.00	0.00
DEPT	POLICE OFFICER PATROL I	3.00	0.00	0.00
DEPT	POLICE OFFICER PATROL II	2.00	0.00	0.00
DEPT	POLICE OFFICER PATROL III	2.00	0.00	0.00
DEPT	POLICE OFFICER TRAFFIC	1.00	0.00	0.00
DEPT	POLICE OFFICER TRAFFIC I	1.00	0.00	0.00
DEPT	POLICE REGULAR SALARIES & WAGES	0.00	0.00	1,595,211.00
DEPT	POLICE SERVICE CLERK (2)	1.00	0.00	0.00
DEPT	SERGEANT CID	1.00	0.00	0.00
DEPT	SERGEANT PATROL	1.00	0.00	0.00
DEPT	SERGEANT PATROL I	1.00	0.00	0.00
DEPT	SERGEANT PATROL II	2.00	0.00	0.00
DEPT	VICTIM ADVOCATE COORDINATOR	1.00	0.00	0.00

001-2110-521-1400	OVERTIME	160,755.00	160,754.19	155,000.00	144,372.81	153,986.00
001-2110-521-1500	INCENTIVE PAY	11,900.00	11,080.00	12,500.00	13,410.00	11,480.00
001-2110-521-1510	INCENTIVE PAY / CELL PHONE A...	5,400.00	4,745.00	6,000.00	4,525.00	5,400.00
001-2110-521-1520	UNIFORM ALLOWANCE	4,718.00	4,717.20	4,500.00	4,762.94	6,700.00

Budget Detail

Budget Code	Description	Units	Price	Amount
DEPT	CID CLOTHING ALLOWANCE	0.00	0.00	6,000.00
DEPT	CLOTHING ALLOWANCE	0.00	0.00	700.00

001-2110-521-1530	BOOT ALLOWANCE	3,120.00	3,120.00	3,000.00	3,120.00	2,520.00

Budget Detail

Budget Code	Description	Units	Price	Amount
DEPT	BOOT ALLOWANCE	21.00	120.00	2,520.00

Attachment: Holly Hill Budget FY23_24 SECOND HEARING (2023-R-52 : Final Budget Fiscal Year 2023

Budget Worksheet

For Fiscal: 2023-2024 Period Ending: 09/30/2024

		2021-2022 Total Budget	2021-2022 Total Activity	2022-2023 Total Budget	2022-2023 Total Activity	Defined Budgets 2023-2024 DEPT
001-2110-521-2100	FICA TAXES	120,300.00	110,537.89	125,000.00	111,236.73	135,960.00
001-2110-521-2200	RETIREMENT CONTRIBUTION	459,700.00	455,911.10	500,000.00	488,815.29	492,346.00
Budget Detail						
Budget Code	Description			Units	Price	Amount
DEPT	FRS RETIREMENT			0.00	0.00	33,980.00
DEPT	POLICE PENSION CITY			0.00	0.00	311,690.00
DEPT	POLICE PENSION STATE			0.00	0.00	146,676.00
001-2110-521-2300	LIFE & HEALTH INSURANCE	302,420.00	230,785.95	327,000.00	222,331.95	270,410.00
Budget Detail						
Budget Code	Description			Units	Price	Amount
DEPT	HEALTH INSURANCE			28.00	9,460.00	264,880.00
DEPT	LIFE INSURANCE			0.00	0.00	5,530.00
001-2110-521-2400	WORKERS COMP INSURANCE	24,200.00	19,095.37	28,000.00	24,718.81	34,830.00
001-2110-521-2500	UNEMPLOYMENT COMP	0.00	-1,272.87	0.00	1,925.00	0.00
001-2110-521-3101	PROFESSIONAL SERVICES	6,400.00	5,622.37	6,600.00	5,351.38	6,800.00
Budget Detail						
Budget Code	Description			Units	Price	Amount
DEPT	SUSTEEN (CELLPHONE FORENSIC)			0.00	0.00	2,200.00
DEPT	THOMPSON RUETTER (CLEAR CID)			0.00	0.00	4,600.00
001-2110-521-3400	OTHER SERVICES	3,300.00	1,110.63	3,400.00	1,357.44	3,800.00
Budget Detail						
Budget Code	Description			Units	Price	Amount
DEPT	BEAST			0.00	0.00	1,500.00
DEPT	EVIDENCE DESTRUCTION			0.00	0.00	500.00
DEPT	EVIDENCE STORAGE			0.00	0.00	800.00
DEPT	METH LAB CLEAN UP			0.00	0.00	1,000.00
001-2110-521-3500	INVESTIGATION COSTS	1,500.00	628.05	1,500.00	558.99	1,750.00
Budget Detail						
Budget Code	Description			Units	Price	Amount
DEPT	CONFIDENTIAL INFORMANTS			0.00	0.00	500.00
DEPT	MISC INVESTIGATION COSTS			0.00	0.00	750.00
DEPT	SUBPOENAS			0.00	0.00	500.00
001-2110-521-4001	TRAVEL & PER DIEM	4,000.00	1,437.00	4,500.00	405.12	4,500.00
001-2110-521-4200	POSTAGE, FRT, EXPRESS	750.00	83.87	900.00	94.04	900.00

Attachment: Holly Hill Budget FY23_24 SECOND HEARING (2023-R-52 : Final Budget Fiscal Year 2023

Budget Worksheet

For Fiscal: 2023-2024 Period Ending: 09/30/2024

Defined Budgets

		2021-2022 Total Budget	2021-2022 Total Activity	2022-2023 Total Budget	2022-2023 Total Activity	2023-2024 DEPT
Budget Detail						
Budget Code	Description			Units	Price	Amount
DEPT	POSTAGE			0.00	0.00	700.00
DEPT	POSTAGE- VAC			0.00	0.00	200.00
001-2110-521-4400	RENTALS & LEASES	19,700.00	2,344.68	35,600.00	17,568.14	19,700.00
Budget Detail						
Budget Code	Description			Units	Price	Amount
DEPT	COPIER LEASE			0.00	0.00	2,500.00
DEPT	LICENSE PLATE READER LEASE			0.00	0.00	15,900.00
DEPT	PRINTER			0.00	0.00	1,300.00
001-2110-521-4500	INSURANCE/NON-EMPLOYEE	58,749.00	58,701.09	73,622.00	74,937.72	95,686.00
Budget Detail						
Budget Code	Description			Units	Price	Amount
DEPT	LAW ENFORCEMENT LIABILITY			0.00	0.00	29,709.00
DEPT	PROPERTY & LIABILITY INSURANCE			0.00	0.00	65,977.00
001-2110-521-4601	REPAIRS & MAINTENANCE	5,400.00	3,898.64	5,400.00	1,809.06	3,000.00
Budget Detail						
Budget Code	Description			Units	Price	Amount
DEPT	COMMUNICATIONS INTERNATIONAL & BATTERIES			0.00	0.00	600.00
DEPT	RADAR CALIBRATIONS			0.00	0.00	2,400.00
001-2110-521-4611	MAINTENANCE CONTRACTS	24,246.00	17,156.16	20,930.00	16,414.54	32,140.00
Budget Detail						
Budget Code	Description			Units	Price	Amount
DEPT	AXON-BODY CAMERA (YEAR 3 LICENSE AND CAMERA FEE)			0.00	0.00	17,530.00
DEPT	AXON-TASER CONTRACT (5YEAR) 19 TASERS W/TRAINING			0.00	0.00	13,100.00
DEPT	CAMERA MAINTENANCE			0.00	0.00	110.00
DEPT	MAINTENANCE CONTRACTS			0.00	0.00	1,400.00
001-2110-521-4650	FLEET CHARGES	31,804.00	31,803.78	40,000.00	41,614.96	30,000.00
001-2110-521-4659	PORTN OF 4650 REIMB BY EE	-8,800.00	-9,037.99	-9,400.00	-10,725.32	-9,400.00
001-2110-521-4660	SMALL EQ REPAIR & MAINT	500.00	32.88	500.00	0.00	500.00
001-2110-521-4700	PRINTING & BINDING	1,000.00	986.30	2,000.00	949.01	2,500.00
001-2110-521-4901	OTHER CHARGES	625.00	624.78	1,500.00	663.95	1,500.00

Attachment: Holly Hill Budget FY23_24 SECOND HEARING (2023-R-52 : Final Budget Fiscal Year 2023

Budget Worksheet

For Fiscal: 2023-2024 Period Ending: 09/30/2024

Defined Budgets

		2021-2022 Total Budget	2021-2022 Total Activity	2022-2023 Total Budget	2022-2023 Total Activity	2023-2024 DEPT
001-2110-521-5100	OFFICE SUPPLIES	3,475.00	2,057.26	3,000.00	1,577.86	3,000.00
001-2110-521-5201	OPERATING SUPPLIES	12,750.00	11,868.80	21,209.00	19,996.58	23,000.00
Budget Detail						
Budget Code	Description			Units	Price	Amount
DEPT	AMMO FOR TWO (2) RANGE TRAININGS			0.00	0.00	9,500.00
DEPT	CAMERA			6.00	200.00	1,200.00
DEPT	CHRISTMAS PARADE			0.00	0.00	300.00
DEPT	EVIDENCE SUPPLIES (PACKAGING& DRUG KITS)			0.00	0.00	3,000.00
DEPT	MISC OPERATING SUPPLIES (GLOVES, ETC)			0.00	0.00	8,500.00
DEPT	NATIONAL NIGHT OUT			0.00	0.00	500.00
001-2110-521-5205	MEETING EXPENSE	900.00	706.34	900.00	761.92	900.00
Budget Detail						
Budget Code	Description			Units	Price	Amount
DEPT	INTERVIEW BOARD MEETING EXPENSE			0.00	0.00	100.00
DEPT	NEIGHBORHOOD WATCH MEETING			0.00	0.00	800.00
001-2110-521-5220	CLOTHING & EQUIP	22,598.00	22,597.10	38,700.00	32,357.11	25,000.00
Budget Detail						
Budget Code	Description			Units	Price	Amount
DEPT	COMPLETE UNIFORMS FOR NEW HIRES			0.00	0.00	2,500.00
DEPT	REPLACEMENT BULLETPROOF VEST			8.00	437.50	3,500.00
DEPT	REPLACEMENT EQUIPMENT (LIEU/CLOTHING ALLOWANCE)			0.00	0.00	4,600.00
DEPT	REPLACEMENT FIREARM $12K W/$6200 TRADE-IN VALUE			27.00	200.00	5,400.00
DEPT	REPLACEMENT UNIFORMS			0.00	0.00	9,000.00
001-2110-521-5221	PROGRAM EXPENSE	1,500.00	125.00	500.00	63.90	500.00
Budget Detail						
Budget Code	Description			Units	Price	Amount
DEPT	EXPLORER CHARTER AND INSURANCE			0.00	0.00	500.00
001-2110-521-5250	FUEL & OIL SUPPLIES	91,893.00	91,892.98	90,000.00	69,841.16	100,000.00
001-2110-521-5264	MACH/EQUIP CAPITAL-LIKE	162,855.00	162,635.13	0.00	0.00	0.00
001-2110-521-5400	BOOKS/PUBL/SUBSCR/MEMBE...	1,809.00	445.00	2,500.00	1,191.92	4,600.00
Budget Detail						
Budget Code	Description			Units	Price	Amount
DEPT	ARCHIVE SOCIAL MEDIA			0.00	0.00	2,100.00

Attachment: Holly Hill Budget FY23_24 SECOND HEARING (2023-R-52 : Final Budget Fiscal Year 2023

		2021-2022 Total Budget	2021-2022 Total Activity	2022-2023 Total Budget	2022-2023 Total Activity		2023-2024 DEPT
DEPT	FBI NATIONAL ACADEMY ASSOC			0.00	0.00	300.00	
DEPT	FLORIDA CHIEFS ASSOCIATION			0.00	0.00	400.00	
DEPT	FLORIDA EMERGENCY PREPARDNESS			0.00	0.00	100.00	
DEPT	INT ASSOC FOR PROPERTY AND EVIDENCE			0.00	0.00	200.00	
DEPT	INTERNATIONAL ASSOCIATION OF CHIEFS OF POLICE			0.00	0.00	400.00	
DEPT	NOTARY			0.00	0.00	300.00	
DEPT	VAC UPDATE TRAINING AND			0.00	0.00	500.00	
DEPT	VOLUSIA/FLAGLER COUNTY POLICE CHIEFS ASSOC			0.00	0.00	300.00	
001-2110-521-5501	TRAINING & EDUCATION COST	17,200.00	16,262.48	18,400.00	15,565.54		25,450.00
Budget Detail							
Budget Code	Description			Units	Price	Amount	
DEPT	2024 CJIS TRAINING			2.00	400.00	800.00	
DEPT	2024 GOVERNORS HURRICANE CONF			0.00	0.00	300.00	
DEPT	FBI FLORIDA EXECUTIVE LEADERSHIP			0.00	0.00	600.00	
DEPT	MASTER PROGRAM FOR OFFICE MANAGER			4.00	500.00	2,000.00	
DEPT	MISC TRAINING CLASSES			0.00	0.00	5,000.00	
DEPT	PLI			27.00	150.00	4,050.00	
DEPT	TARGET SOLUTIONS			27.00	100.00	2,700.00	
DEPT	TARGET SOLUTIONS MAINTENANCE			0.00	0.00	400.00	
DEPT	Test for Promotion to Sergeant			0.00	0.00	3,000.00	
DEPT	THI			2.00	1,200.00	2,400.00	
DEPT	VAC TRAINING			0.00	0.00	1,500.00	
DEPT	VAC TRAINING MADATORY UPDATES			0.00	0.00	1,000.00	
DEPT	VAC TRAINING SOFTWARE			0.00	0.00	1,700.00	
001-2110-521-5520	2ND DOLLAR FUND	3,700.00	0.00	3,700.00	0.00		3,700.00
Budget Detail							
Budget Code	Description			Units	Price	Amount	
DEPT	FBI NAA TRAINING			0.00	0.00	1,000.00	
DEPT	FL POLICE CHIEFS TRAINING			0.00	0.00	900.00	
DEPT	NEW POLICE CHIEFS			0.00	0.00	500.00	
DEPT	SEMINARS AND CLASSES BY STATE FOR POLICE			0.00	0.00	1,300.00	
001-2110-521-5610	PROGRAM EXPENSES	750.00	106.48	800.00	25.98		800.00
Budget Detail							
Budget Code	Description			Units	Price	Amount	
DEPT	VIP-CLOTHING AND EQUIPMENT			0.00	0.00	800.00	

Attachment: Holly Hill Budget FY23_24 SECOND HEARING (2023-R-52 : Final Budget Fiscal Year 2023

Budget Worksheet

For Fiscal: 2023-2024 Period Ending: 09/30/2024

		2021-2022 Total Budget	2021-2022 Total Activity	2022-2023 Total Budget	2022-2023 Total Activity	Defined Budgets 2023-2024 DEPT
001-2110-521-6400	MACHINERY & EQUIPMENT	5,995.00	5,995.00	0.00	0.00	0.00
001-2110-521-8200	PRIVATE ORG.GRANTS/CONTRB	1,000.00	1,000.00	1,000.00	1,000.00	1,500.00
Budget Detail						
Budget Code	Description			Units	Price	Amount
DEPT	CRIME STOPPERS DINNER			0.00	0.00	1,500.00
001-2110-521-8301	OTHER GRANTS & AIDS	500.00	0.00	500.00	0.00	500.00
	Division: 2110 - PUBLIC SAFETY Total:	3,043,762.00	2,732,985.47	3,010,823.00	2,637,472.00	3,091,169.00
Division: 2210 - PUBLIC SAFETY						
001-2210-522-1200	REGULAR SALARIES & WAGE	714,641.00	659,917.20	800,000.00	678,211.29	887,750.00
Budget Detail						
Budget Code	Description			Units	Price	Amount
DEPT	DRIVER/ENGINEER-PARAMEDIC SHIFT A			1.00	0.00	0.00
DEPT	DRIVER/ENGINEER-PARAMEDIC SHIFT B			1.00	0.00	0.00
DEPT	DRIVER/ENGINEER-PARAMEDIC SHIFT C			1.00	0.00	0.00
DEPT	FIRE CHIEF			1.00	0.00	0.00
DEPT	FIRE REGULAR SALARIES & WAGES TOTAL			0.00	0.00	887,750.00
DEPT	FIREFIGHTER SHIFT A			1.00	0.00	0.00
DEPT	FIREFIGHTER SHIFT B			1.00	0.00	0.00
DEPT	FIREFIGHTER SHIFT B			1.00	0.00	0.00
DEPT	FIREFIGHTER SHIFT C			1.00	0.00	0.00
DEPT	FIREFIGHTER-PARAMEDIC SHIFT A			1.00	0.00	0.00
DEPT	FIREFIGHTER-PARAMEDIC SHIFT C			1.00	0.00	0.00
DEPT	LIEUTENANT SHIFT B			1.00	0.00	0.00
DEPT	LIEUTENANT SHIFT C			1.00	0.00	0.00
DEPT	LIEUTENANT-PARAMEDIC SHIFT A			1.00	0.00	0.00
001-2210-522-1300	OTHER SALARIES & WAGES	26,639.00	26,638.34	30,000.00	27,873.50	32,941.00
Budget Detail						
Budget Code	Description			Units	Price	Amount
DEPT	ADMINISTRATIVE ASSISTANT PT			1.00	32,941.00	32,941.00
001-2210-522-1400	OVERTIME	110,199.00	110,198.37	119,800.00	112,637.26	113,817.00
001-2210-522-1500	INCENTIVE PAY	7,018.00	7,018.00	6,500.00	6,230.00	6,240.00
001-2210-522-1510	CELL PHONE ALLOWANCE	603.00	602.50	600.00	562.50	600.00
001-2210-522-1530	BOOT ALLOWANCE	1,440.00	0.00	1,440.00	1,560.00	1,440.00
001-2210-522-2100	FICA TAXES	65,900.00	57,998.88	72,890.00	60,187.50	79,840.00
001-2210-522-2200	RETIREMENT CONTRIBUTION	392,400.00	374,352.88	431,540.00	403,194.19	465,940.00

Attachment: Holly Hill Budget FY23_24 SECOND HEARING (2023-R-52 : Final Budget Fiscal Year 2023

		2021-2022 Total Budget	2021-2022 Total Activity	2022-2023 Total Budget	2022-2023 Total Activity	2023-2024 DEPT
Budget Detail						
Budget Code	Description			Units	Price	Amount
DEPT	FIRE PENSION-CITY			0.00	0.00	412,250.00
DEPT	FIRE PENSION-STATE			0.00	0.00	49,210.00
DEPT	FRS RETIREMENT			0.00	0.00	4,480.00
001-2210-522-2300	LIFE & HEALTH INSURANCE	142,600.00	98,471.26	148,670.00	103,157.21	125,830.00
Budget Detail						
Budget Code	Description			Units	Price	Amount
DEPT	HEALTH INSURANCE			13.00	9,460.00	122,980.00
DEPT	LIFE			0.00	0.00	2,850.00
001-2210-522-2400	WORKERS COMP INSURANCE	21,400.00	18,807.46	25,000.00	22,926.87	33,450.00
001-2210-522-2500	UNEMPLOYMENT COMP	300.00	203.16	0.00	0.00	0.00
001-2210-522-3101	PROFESSIONAL SERVICES	2,480.00	620.00	4,160.00	1,400.00	0.00
001-2210-522-3400	OTHER SERVICES	520.00	520.00	600.00	21.29	600.00
Budget Detail						
Budget Code	Description			Units	Price	Amount
DEPT	BIOHAZARD WASTE DISPOSAL			0.00	0.00	600.00
001-2210-522-4001	TRAVEL & PER DIEM	300.00	0.00	300.00	0.00	300.00
Budget Detail						
Budget Code	Description			Units	Price	Amount
DEPT	PER DIEM FOR TRAINING			0.00	0.00	300.00
001-2210-522-4200	POSTAGE, FRT, EXPRESS	250.00	98.66	250.00	71.23	250.00
001-2210-522-4400	RENTALS & LEASES	16,000.00	14,940.78	16,000.00	13,970.28	19,300.00
Budget Detail						
Budget Code	Description			Units	Price	Amount
DEPT	HYDRANT RENTAL FROM WATER DEPARTMENT			0.00	0.00	18,000.00
DEPT	MEDICAL OXYGEN RENTAL AND FILL			0.00	0.00	1,300.00
001-2210-522-4500	INSURANCE/NON-EMPLOYEE	22,826.00	22,739.27	25,336.00	27,821.12	39,406.00
Budget Detail						
Budget Code	Description			Units	Price	Amount
DEPT	BROWN & BROWN PACKAGE POLICY			0.00	0.00	39,406.00
001-2210-522-4601	REPAIRS & MAINTENANCE	3,688.00	3,687.09	1,700.00	756.75	3,000.00

Attachment: Holly Hill Budget FY23_24 SECOND HEARING (2023-R-52 : Final Budget Fiscal Year 2023

Budget Worksheet

For Fiscal: 2023-2024 Period Ending: 09/30/2024

Defined Budgets

		2021-2022 Total Budget	2021-2022 Total Activity	2022-2023 Total Budget	2022-2023 Total Activity	2023-2024 DEPT
Budget Detail						
Budget Code	Description			Units	Price	Amount
DEPT	HURST RESCUE TOOL YEARLY SERVICE			0.00	0.00	1,000.00
DEPT	MSA AIR PACK SERVICE AND MAINTENANCE			0.00	0.00	2,000.00
001-2210-522-4611	MAINTENANCE CONTRACTS	8,869.00	8,627.88	2,700.00	2,791.38	2,700.00
Budget Detail						
Budget Code	Description			Units	Price	Amount
DEPT	BREATHING AIR FILL STATION AND TESTING			0.00	0.00	1,500.00
DEPT	COMMUNICATIONS FOR VEHICLES (FOR CAD SYSTEM)			0.00	0.00	600.00
DEPT	MOBILE COM APP FOR ENGINE MDT (IPAD) (CAD SYSTEM)			0.00	0.00	600.00
001-2210-522-4650	FLEET CHARGES	14,712.00	10,693.79	11,000.00	6,898.94	20,000.00
001-2210-522-4660	SMALL EQUIPMENT REPAIR	500.00	158.47	0.00	602.18	0.00
001-2210-522-4670	GENERATOR REPAIR & MAIN	500.00	0.00	500.00	147.99	1,000.00
001-2210-522-4700	PRINTING & BINDING	325.00	325.00	300.00	0.00	300.00
Budget Detail						
Budget Code	Description			Units	Price	Amount
DEPT	PRINTING OF MEDICAL AND FIRE FORMS			0.00	0.00	300.00
001-2210-522-5100	OFFICE SUPPLIES	575.00	183.98	600.00	620.58	600.00
001-2210-522-5201	OPERATING SUPPLIES	19,444.00	19,443.68	28,500.00	16,698.93	22,500.00
Budget Detail						
Budget Code	Description			Units	Price	Amount
DEPT	ENGINE OPERATIONS			0.00	0.00	7,000.00
DEPT	REPLACEMENT TURNOUT GEAR 3 SETS			0.00	0.00	9,000.00
DEPT	STATION OPERATIONS			0.00	0.00	6,500.00
001-2210-522-5205	MEETING EXPENSE	100.00	0.00	0.00	0.00	0.00
001-2210-522-5206	TRAINING SUPPLIES	1,000.00	838.98	0.00	1,558.07	0.00
001-2210-522-5219	UNIFORM EXPENSE	6,052.00	6,051.26	6,000.00	4,174.29	7,500.00
Budget Detail						
Budget Code	Description			Units	Price	Amount
DEPT	STATION UNIFORMS			0.00	0.00	3,500.00
DEPT	UNIFORM CLEANING			0.00	0.00	2,500.00
DEPT	UNIFORM RENTAL			12.00	125.00	1,500.00

Attachment: Holly Hill Budget FY23_24 SECOND HEARING (2023-R-52 : Final Budget Fiscal Year 2023

Budget Worksheet

For Fiscal: 2023-2024 Period Ending: 09/30/2024

Defined Budgets

		2021-2022 Total Budget	2021-2022 Total Activity	2022-2023 Total Budget	2022-2023 Total Activity	2023-2024 DEPT
001-2210-522-5250	FUEL & OIL SUPPLIES	10,535.00	10,534.77	25,000.00	11,009.32	25,000.00
001-2210-522-5264	MACH/EQUIP CAPITAL-LIKE	31,069.00	41,267.31	0.00	0.00	0.00
001-2210-522-5270	EMS SUPPLIES	3,196.00	3,059.27	10,000.00	3,060.03	11,000.00
001-2210-522-5290	FIRE PREVENTION SUPPLIES	535.00	531.75	500.00	0.00	500.00
Budget Detail						
Budget Code	Description			Units	Price	Amount
DEPT	23 / 24 SCHOOL AND COMMUNITY AWARENESS SUPPLIES			0.00	0.00	500.00
001-2210-522-5400	BOOKS/PUBL/SUBSCR/MEMBE...	500.00	275.00	500.00	349.95	500.00
Budget Detail						
Budget Code	Description			Units	Price	Amount
DEPT	FLORIDA FIRE CHIEFS			0.00	0.00	100.00
DEPT	FLORIDA FIRE MARSHALLS			0.00	0.00	200.00
DEPT	NOTARY			0.00	0.00	100.00
DEPT	VOLUSIA COUNTY FIRE CHIEFS			0.00	0.00	100.00
001-2210-522-5501	TRAINING & EDUCATION COST	7,179.00	3,322.08	10,300.00	1,962.47	10,400.00
Budget Detail						
Budget Code	Description			Units	Price	Amount
DEPT	EDUCATIONAL REIMBURSEMENT (IAFF)			0.00	0.00	7,500.00
DEPT	TARGET SOLUTIONS			0.00	0.00	1,800.00
DEPT	TRAINING			0.00	0.00	100.00
DEPT	TRAINING SUPPLIES			0.00	0.00	1,000.00
	Division: 2210 - PUBLIC SAFETY Total:	1,634,295.00	1,502,127.07	1,780,686.00	1,510,455.12	1,912,704.00
Division: 2410 - PLANNING & CODE ENF						
001-2410-515-1200	REGULAR SALARIES	96,100.00	91,517.32	99,160.00	93,524.15	107,268.00
Budget Detail						
Budget Code	Description			Units	Price	Amount
DEPT	COMMUNITY DEVELOPMENT DIRECTOR (.75)			1.00	0.00	0.00
DEPT	ECONOMIC DEVELOPMENT DIRECTOR/CRA COORD (.25)			1.00	0.00	0.00
DEPT	REGULAR SALARIES TOTAL			0.00	0.00	107,268.00
001-2410-515-1510	INCENTIVE PAY	600.00	573.76	600.00	562.51	600.00

Attachment: Holly Hill Budget FY23_24 SECOND HEARING (2023-R-52 : Final Budget Fiscal Year 2023

Budget Worksheet

For Fiscal: 2023-2024 Period Ending: 09/30/2024

Defined Budgets

		2021-2022 Total Budget	2021-2022 Total Activity	2022-2023 Total Budget	2022-2023 Total Activity	2023-2024 DEPT
Budget Detail						
Budget Code	Description			Units	Price	Amount
DEPT	CELL PHONE ALLOWANCE			24.00	25.00	600.00
001-2410-515-1520	UNIFORM ALLOWANCE	200.00	150.00	200.00	200.00	200.00
001-2410-515-2100	FICA/MEDICARE TAXES	7,500.00	6,877.94	7,650.00	6,982.47	8,270.00
001-2410-515-2200	RETIREMENT CONTRIBUTION	24,912.00	24,912.00	28,000.00	26,948.19	33,090.00
001-2410-515-2300	LIFE & HEALTH INSURANCE	11,288.00	8,986.70	12,000.00	9,113.69	9,850.00
Budget Detail						
Budget Code	Description			Units	Price	Amount
DEPT	HEALTH INSURANCE			0.00	0.00	9,470.00
DEPT	LIFE INSURANCE			0.00	0.00	380.00
001-2410-515-2400	WORKERS COMP INSURANCE	100.00	73.43	100.00	81.09	1,040.00
001-2410-515-3101	PROFESSIONAL SERVICES	6,000.00	-368.75	4,000.00	196.39	1,000.00
Budget Detail						
Budget Code	Description			Units	Price	Amount
DEPT	REFUNDABLE EXPENSE FOR STORMWATER REVIEWS, ETC			0.00	0.00	1,000.00
001-2410-515-3150	LEGAL/OFFICIAL ADVERTISNG	1,774.00	0.00	2,400.00	120.50	1,000.00
Budget Detail						
Budget Code	Description			Units	Price	Amount
DEPT	LEGAL ADS FOR REZONES, CPA, ETC			0.00	0.00	1,000.00
001-2410-515-4001	TRAVEL & PER DIEM	565.00	564.16	800.00	0.00	900.00
001-2410-515-4200	POSTAGE, FRT, EXPRESS	15.00	0.00	0.00	0.00	0.00
001-2410-515-4400	RENTALS & LEASES	865.00	803.42	865.00	618.86	865.00
001-2410-515-4500	INSURANCE/NON EMPLOYEE	1,042.00	1,041.26	1,311.00	1,308.64	6,914.00
Budget Detail						
Budget Code	Description			Units	Price	Amount
DEPT	BROWN & BROWN PACKAGE POLICY			0.00	0.00	6,914.00
001-2410-515-4611	REPAIRS & MAINTENANCE	404.00	403.42	300.00	545.49	300.00
Budget Detail						
Budget Code	Description			Units	Price	Amount
DEPT	COPIER			0.00	0.00	300.00
001-2410-515-4700	PRINTING & BINDING	232.00	195.33	0.00	49.00	0.00

Attachment: Holly Hill Budget FY23_24 SECOND HEARING (2023-R-52 : Final Budget Fiscal Year 2023

Budget Worksheet

For Fiscal: 2023-2024 Period Ending: 09/30/2024

Defined Budgets

		2021-2022 Total Budget	2021-2022 Total Activity	2022-2023 Total Budget	2022-2023 Total Activity	2023-2024 DEPT
001-2410-515-5100	OFFICE SUPPLIES	200.00	196.84	200.00	24.79	200.00
001-2410-515-5400	BOOKS/PUBL/SUBSCR/MEMBE...	675.00	675.00	850.00	746.00	950.00
Budget Detail						
Budget Code	Description			Units	Price	Amount
DEPT	AICP LICENSE AND CNU ACCREDITATION, ETC			0.00	0.00	950.00
001-2410-515-5501	TRAINING & EDUCATION COST	750.00	420.00	750.00	0.00	750.00
Budget Detail						
Budget Code	Description			Units	Price	Amount
DEPT	CONFERENCE FOR REQUIRED CE CREDITS			0.00	0.00	750.00
001-2410-524-1200	REGULAR SALARIES	72,059.00	72,058.85	86,200.00	86,831.25	141,394.00
Budget Detail						
Budget Code	Description			Units	Price	Amount
DEPT	CLERICAL ASSISTANT			0.70	0.00	0.00
DEPT	CODE ENFORCEMENT I			1.00	0.00	0.00
DEPT	CODE ENFORCEMENT II			0.50	0.00	0.00
DEPT	CODE ENFORCEMENT REGULAR SALARIES TOTAL			0.00	0.00	141,394.00
DEPT	SENIOR CODE ENFORCEMENT OFFICER			1.00	0.00	0.00
001-2410-524-1300	OTHER SALARIES & WAGES	11,982.00	8,677.02	0.00	0.00	0.00
001-2410-524-1400	OVERTIME	205.00	0.00	300.00	2.00	720.00
001-2410-524-1510	INCENTIVE PAY	614.00	613.75	500.00	843.75	1,200.00
001-2410-524-1520	UNIFORM ALLOWANCE	0.00	0.00	0.00	100.00	70.00
001-2410-524-1530	BOOT ALLOWANCE	200.00	180.00	200.00	180.00	300.00
001-2410-524-2100	FICA/MEDICARE TAXES	6,600.00	6,349.12	6,670.00	6,626.09	11,010.00
001-2410-524-2200	RETIREMENT CONTRIBUTION	9,300.00	9,244.08	10,500.00	10,646.11	19,300.00
001-2410-524-2300	LIFE & HEALTH INSURANCE	17,930.00	17,929.73	12,500.00	19,932.72	30,800.00
Budget Detail						
Budget Code	Description			Units	Price	Amount
DEPT	HEALTH INSURANCE			1.00	30,280.00	30,280.00
DEPT	LIFE INSURANCE			0.00	0.00	520.00
001-2410-524-2400	WORKERS COMP INSURANCE	900.00	832.37	1,200.00	953.11	2,180.00
001-2410-524-3101	PROFESSIONAL SERVICES	4,800.00	3,075.00	3,900.00	3,100.00	3,000.00

Attachment: Holly Hill Budget FY23_24 SECOND HEARING (2023-R-52 : Final Budget Fiscal Year 2023

Budget Worksheet

For Fiscal: 2023-2024 Period Ending: 09/30/2024

		2021-2022 Total Budget	2021-2022 Total Activity	2022-2023 Total Budget	2022-2023 Total Activity	Defined Budgets 2023-2024 DEPT
Budget Detail						
Budget Code	Description			Units	Price	Amount
DEPT	SPECIAL MASTER			0.00	0.00	3,000.00
001-2410-524-3150	LEGAL/OFFICIAL ADVERTISNG	1,500.00	784.00	1,500.00	696.70	1,000.00
Budget Detail						
Budget Code	Description			Units	Price	Amount
DEPT	LIENS, RECORDING, LEGAL			0.00	0.00	1,000.00
001-2410-524-3400	OTHER SERVICES	7,000.00	970.00	7,000.00	510.00	7,000.00
Budget Detail						
Budget Code	Description			Units	Price	Amount
DEPT	LAWN CARE, DEMO, DEBRIS REMOVAL, ETC.			0.00	0.00	7,000.00
001-2410-524-3490	HUMANE SOCIETY SERVICES	40,675.00	24,485.00	30,000.00	19,069.00	30,000.00
Budget Detail						
Budget Code	Description			Units	Price	Amount
DEPT	HUMANE SOCIETY			0.00	0.00	20,000.00
DEPT	REDINGER CLINIC			0.00	0.00	10,000.00
001-2410-524-4001	TRAVEL & PER DIEM	1,000.00	384.47	1,500.00	496.00	1,500.00
Budget Detail						
Budget Code	Description			Units	Price	Amount
DEPT	TRAVEL AND PER DIEM FOR CODE			0.00	0.00	1,500.00
001-2410-524-4200	POSTAGE, FRT, EXPRESS	6,235.00	3,647.75	3,500.00	3,579.54	3,500.00
Budget Detail						
Budget Code	Description			Units	Price	Amount
DEPT	MAILINGS OF NOTICES OF VIOLATION, NTA, ETC			0.00	0.00	3,500.00
001-2410-524-4400	RENTALS & LEASES	700.00	597.24	700.00	423.49	700.00
001-2410-524-4500	INSURANCE/NON-EMPLOYEE	4,586.00	4,582.52	6,170.00	6,158.96	8,432.00
Budget Detail						
Budget Code	Description			Units	Price	Amount
DEPT	BROWN & BROWN PACKAGE POLICY			0.00	0.00	8,432.00
001-2410-524-4601	REPAIRS & MAINTENANCE	659.00	0.00	700.00	0.00	700.00
001-2410-524-4611	MAINTENANCE CONTRACTS	425.00	424.88	350.00	293.15	350.00

Attachment: Holly Hill Budget FY23_24 SECOND HEARING (2023-R-52 : Final Budget Fiscal Year 2023

Budget Worksheet

For Fiscal: 2023-2024 Period Ending: 09/30/2024

		2021-2022 Total Budget	2021-2022 Total Activity	2022-2023 Total Budget	2022-2023 Total Activity	Defined Budgets 2023-2024 DEPT
Budget Detail						
Budget Code	Description			Units / Price / Amount		
DEPT	COPIER			0.00 / 0.00 / 350.00		
001-2410-524-4650	FLEET CHARGES	1,466.00	679.90	1,500.00	543.50	1,000.00
001-2410-524-4700	PRINTING & BINDING	300.00	247.90	200.00	98.00	200.00
Budget Detail						
Budget Code	Description			Units / Price / Amount		
DEPT	NOTICES, PLACARDS, ETC			0.00 / 0.00 / 200.00		
001-2410-524-5100	OFFICE SUPPLIES	550.00	547.14	450.00	454.83	450.00
001-2410-524-5201	OPERATING SUPPLIES	110.00	60.00	575.00	66.65	250.00
001-2410-524-5220	CLOTHING & EQUIP	461.00	259.91	600.00	0.00	600.00
Budget Detail						
Budget Code	Description			Units / Price / Amount		
DEPT	SHIRTS AND PANTS FOR KYLE			0.00 / 0.00 / 240.00		
DEPT	SHIRTS AND PANTS FOR RANDY			0.00 / 0.00 / 240.00		
DEPT	SHIRTS FOR PEG			0.00 / 0.00 / 120.00		
001-2410-524-5250	FUEL & OIL SUPPLIES	1,739.00	1,738.28	1,700.00	575.01	1,700.00
001-2410-524-5400	BOOKS/PUBL/SUBSCR/MEMBE...	350.00	151.75	235.00	190.00	235.00
Budget Detail						
Budget Code	Description			Units / Price / Amount		
DEPT	FACA MEMBERSHIP (ANIMAL CONTROL ASSOCIATION)			0.00 / 0.00 / 80.00		
DEPT	FACE MEMBERSHIP (CODE ENFORCEMENT ASSOCIATION)			0.00 / 0.00 / 80.00		
DEPT	UPDATED ICC / IPM BOOK OR ONLINE ACCESS			0.00 / 0.00 / 75.00		
001-2410-524-5501	TRAINING & EDUCATION COST	1,900.00	975.00	2,425.00	600.00	1,500.00
Budget Detail						
Budget Code	Description			Units / Price / Amount		
DEPT	CONTINUING ED FOR CERTIFICATION - FACE CONFERENCE			0.00 / 0.00 / 1,500.00		
Division: 2410 - PLANNING & CODE ENF Total:		347,468.00	296,517.49	340,261.00	303,991.63	442,288.00

Attachment: Holly Hill Budget FY23_24 SECOND HEARING (2023-R-52 : Final Budget Fiscal Year 2023

Budget Worksheet

For Fiscal: 2023-2024 Period Ending: 09/30/2024

Defined Budgets

		2021-2022 Total Budget	2021-2022 Total Activity	2022-2023 Total Budget	2022-2023 Total Activity	2023-2024 DEPT
Division: 4141 - ROADS & STREETS						
001-4141-541-1200	REGULAR SALARIES & WAGE	114,525.00	114,524.61	189,000.00	118,907.35	286,187.00
Budget Detail						
Budget Code	Description			Units	Price	Amount
DEPT	LEAD MAINTENANCE WORKER			1.00	0.00	
DEPT	MAINTENANCE WORKER I			6.00	0.00	
DEPT	MAINTENANCE WORKER II			1.00	0.00	
DEPT	REGULAR SALARIES & WAGES TOTAL			0.00	0.00	286,187.00
001-4141-541-1400	OVERTIME	1,520.00	1,519.68	3,000.00	4,323.84	5,005.00
001-4141-541-1510	INCENTIVE PAY	300.00	210.88	300.00	120.63	0.00
001-4141-541-1520	UNIFORM ALLOWANCE	70.00	70.00	100.00	70.00	0.00
001-4141-541-1530	BOOT ALLOWANCE	642.00	522.00	700.00	762.00	960.00
Budget Detail						
Budget Code	Description			Units	Price	Amount
DEPT	BOOT ALLOWANCE - MAINT. WORKERS			8.00	120.00	960.00
001-4141-541-2100	FICA/MEDICARE TAXES	8,620.00	7,828.07	10,500.00	9,325.75	22,400.00
001-4141-541-2200	RETIREMENT CONTRIBUTION	12,859.00	12,858.87	23,000.00	15,272.56	39,560.00
001-4141-541-2300	LIFE & HEALTH INSURANCE	33,678.00	29,711.34	62,600.00	31,559.03	76,700.00
Budget Detail						
Budget Code	Description			Units	Price	Amount
DEPT	HEALTH INSURANCE			8.00	9,460.00	75,680.00
DEPT	LIFE INSURANCE			0.00	0.00	1,020.00
001-4141-541-2400	WORKERS COMP INSURANCE	6,522.00	6,521.24	10,500.00	4,834.54	16,790.00
001-4141-541-4001	TRAVEL & PER DIEM	23.00	0.00	100.00	0.00	100.00
001-4141-541-4200	POSTAGE, FRT, EXPRESS	100.00	4.84	50.00	0.00	50.00
001-4141-541-4400	RENTALS & LEASES	1,500.00	61.19	1,500.00	0.00	1,500.00
Budget Detail						
Budget Code	Description			Units	Price	Amount
DEPT	ASPHALT ROLLER, GRINDERS, ETC.			0.00	0.00	1,500.00
001-4141-541-4500	INSURANCE/NON-EMPLOYEE	6,242.00	6,236.64	12,952.00	12,928.60	20,598.00
Budget Detail						
Budget Code	Description			Units	Price	Amount
DEPT	BROWN & BROWN PACKAGE POLICY			0.00	0.00	20,598.00

Attachment: Holly Hill Budget FY23_24 SECOND HEARING (2023-R-52 : Final Budget Fiscal Year 2023

		2021-2022 Total Budget	2021-2022 Total Activity	2022-2023 Total Budget	2022-2023 Total Activity	2023-2024 DEPT
001-4141-541-4601	REPAIRS & MAINTENANCE	14,968.00	11,403.14	52,830.00	45,547.02	69,850.00
Budget Detail						
Budget Code	Description			Units	Price	Amount
DEPT	BATES SECURITY - PLANT ENTRANCE			0.00	0.00	2,000.00
DEPT	BUCKET TRUCK ANNUAL CERTIFICATION			0.00	0.00	800.00
DEPT	CITY WIDE MAINTENANCE VOTED BY COMMISSION			0.00	0.00	51,550.00
DEPT	STREETS, ROW, BRIDGES, ETC.			0.00	0.00	15,500.00
001-4141-541-4610	TRAFFIC LIGHT REPAIRS	49,547.00	29,465.76	42,200.00	39,524.81	38,150.00
Budget Detail						
Budget Code	Description			Units	Price	Amount
DEPT	FEC LICENSE FEE #271924B CALLE GRANDE			0.00	0.00	5,400.00
DEPT	FEC XING SIGNAL MAINT #271925H FLOMICH STREET			0.00	0.00	5,400.00
DEPT	FEC XING SIGNAL MAINT #271926P WALKER STREET			0.00	0.00	2,750.00
DEPT	FEC XING SIGNAL MAINT #271931L 2ND ST			0.00	0.00	2,350.00
DEPT	FEC XING SIGNAL MAINT #273056X 10TH ST			0.00	0.00	2,350.00
DEPT	FEC XING SIGNAL MAINT #291924B CALLE GRANDE			0.00	0.00	5,400.00
DEPT	FEC XING SIGNAL MAINT #291929K 6TH ST			0.00	0.00	5,400.00
DEPT	PEDESTRIAN CROSSING 3RD STREET			0.00	0.00	4,550.00
DEPT	PEDESTRIAN CROSSING CALLE GRANDE			0.00	0.00	4,550.00
001-4141-541-4612	STREET LIGHT REPAIRS	2,500.00	0.00	2,500.00	0.00	2,500.00
Budget Detail						
Budget Code	Description			Units	Price	Amount
DEPT	NOVA STREET LIGHT REPAIRS			0.00	0.00	2,500.00
001-4141-541-4650	FLEET CHARGES	9,000.00	3,121.31	8,000.00	5,652.24	8,000.00
001-4141-541-4660	SMALL EQ REPAIR & MAINT	8,166.00	8,165.72	8,000.00	8,289.74	8,000.00
001-4141-541-4910	OTHER CHARGES	198,774.00	89,829.36	14,893.00	0.00	15,000.00
Budget Detail						
Budget Code	Description			Units	Price	Amount
DEPT	FEC TRACK CROSSING UPGRADE			0.00	0.00	15,000.00
001-4141-541-4920	TREE REMOVAL	12,400.00	5,065.00	22,535.00	23,181.00	17,500.00

Attachment: Holly Hill Budget FY23_24 SECOND HEARING (2023-R-52 : Final Budget Fiscal Year 2023

Budget Worksheet

For Fiscal: 2023-2024 Period Ending: 09/30/2024

Defined Budgets

		2021-2022 Total Budget	2021-2022 Total Activity	2022-2023 Total Budget	2022-2023 Total Activity	2023-2024 DEPT
Budget Detail						
Budget Code	Description			Units	Price	Amount
DEPT	ARBORIST TREE INSPECTIONS			0.00	0.00	2,500.00
DEPT	STREET/ROW TREE REMOVALS			0.00	0.00	15,000.00
001-4141-541-5201	OPERATING SUPPLIES	6,500.00	6,099.69	6,500.00	13,623.14	13,000.00
Budget Detail						
Budget Code	Description			Units	Price	Amount
DEPT	CONES, BARRICADES, SAND BAGS, ETC.			0.00	0.00	13,000.00
001-4141-541-5204	SMALL TOOLS & EQUIPMENT	1,260.00	1,256.45	3,500.00	3,547.22	6,000.00
Budget Detail						
Budget Code	Description			Units	Price	Amount
DEPT	REPLACEMENT WEED EATERS AND EDGERS			0.00	0.00	3,500.00
DEPT	SMALL TOOLS & EQUIPMENT			0.00	0.00	2,500.00
001-4141-541-5210	SIGNS & MATERIALS	14,000.00	5,338.28	18,000.00	11,330.87	16,500.00
Budget Detail						
Budget Code	Description			Units	Price	Amount
DEPT	STREET SIGN ASSEMBLIES			0.00	0.00	4,500.00
DEPT	STREET SIGNS & MATERIALS			0.00	0.00	12,000.00
001-4141-541-5219	UNIFORM EXPENSE	1,000.00	716.60	1,000.00	439.66	1,000.00
Budget Detail						
Budget Code	Description			Units	Price	Amount
DEPT	UNIFORM REPAIRS (ESTIMATED)			0.00	0.00	300.00
DEPT	UNIFORMS - $180 EST X 6 EMPLOYEES X 50%			0.00	0.00	600.00
DEPT	UNIFORMS $130 EST X 1 EMPLOYEE X 10%			0.00	0.00	100.00
001-4141-541-5250	FUEL & OIL SUPPLIES	13,700.00	11,723.54	8,000.00	4,306.95	12,000.00
001-4141-541-5264	MACH/EQUIP CAPITAL-LIKE	7,197.00	3,743.53	0.00	0.00	0.00
001-4141-541-5300	ROAD MATERIAL & SUPPLIES	7,205.00	7,204.36	5,700.00	12,840.09	6,000.00
Budget Detail						
Budget Code	Description			Units	Price	Amount
DEPT	SHELL, LIMEROCK, SAND, FILL DIRT, ETC.			0.00	0.00	6,000.00
001-4141-541-5400	SUBSCRIP & MEMBERSHIPS	50.00	0.00	50.00	0.00	50.00
001-4141-541-5501	TRAINING & EDUCATION COST	450.00	38.25	450.00	0.00	500.00

Attachment: Holly Hill Budget FY23_24 SECOND HEARING (2023-R-52 : Final Budget Fiscal Year 2023

Budget Worksheet

For Fiscal: 2023-2024 Period Ending: 09/30/2024

		2021-2022 Total Budget	2021-2022 Total Activity	2022-2023 Total Budget	2022-2023 Total Activity	Defined Budgets 2023-2024 DEPT
Budget Detail						
Budget Code	Description			Units	Price	Amount
DEPT	MISC TRANINGS, MOT, ETC			0.00	0.00	500.00
	Division: 4141 - ROADS & STREETS Total:	533,318.00	363,240.35	508,460.00	366,387.04	683,900.00
Division: 4160 - PUBLIC WORKS/FLEET						
001-4160-519-1200	REGULAR SALARIES	152,500.00	127,280.44	171,500.00	158,771.55	191,913.00
Budget Detail						
Budget Code	Description			Units	Price	Amount
DEPT	FLEET REGULAR SALARIES TOTAL			0.00	0.00	191,913.00
DEPT	FLEET SUPERVISOR			1.00	0.00	0.00
DEPT	MECHANIC			1.00	0.00	0.00
DEPT	MECHANIC I			1.00	0.00	0.00
DEPT	SENIOR MECHANIC			1.00	0.00	0.00
001-4160-519-1300	OTHER SALARIES & WAGES	10,000.00	9,370.80	0.00	0.00	0.00
001-4160-519-1400	OVERTIME	600.00	342.62	750.00	1,347.63	934.00
001-4160-519-1510	INCENTIVE PAY	600.00	562.50	600.00	512.50	600.00
Budget Detail						
Budget Code	Description			Units	Price	Amount
DEPT	CELL PHONE ALLOWANCE			24.00	25.00	600.00
001-4160-519-1530	BOOT ALLOWANCE	500.00	480.00	500.00	600.00	480.00
Budget Detail						
Budget Code	Description			Units	Price	Amount
DEPT	BOOT ALLOWANCE			4.00	120.00	480.00
001-4160-519-1550	TOOL ALLOWANCE	800.00	675.00	800.00	900.00	600.00
001-4160-519-2100	FICA/MEDICARE TAXES	12,700.00	10,389.23	13,500.00	12,120.50	14,900.00
001-4160-519-2200	RETIREMENT CONTRIBUTION	17,700.00	14,296.76	20,500.00	19,725.23	26,180.00
001-4160-519-2300	LIFE & HEALTH INSURANCE	44,700.00	29,621.99	47,000.00	34,134.79	38,560.00
Budget Detail						
Budget Code	Description			Units	Price	Amount
DEPT	HEALTH INSURANCE			4.00	9,460.00	37,840.00
DEPT	LIFE INSURANCE			0.00	0.00	720.00
001-4160-519-2400	WORKERS COMP INSURANCE	2,200.00	1,508.55	2,500.00	3,030.58	2,910.00
001-4160-519-4001	TRAVEL & PER DIEM	1,000.00	0.00	300.00	0.00	300.00

Attachment: Holly Hill Budget FY23_24 SECOND HEARING (2023-R-52 : Final Budget Fiscal Year 2023

Budget Worksheet

For Fiscal: 2023-2024 Period Ending: 09/30/2024

Defined Budgets

		2021-2022 Total Budget	2021-2022 Total Activity	2022-2023 Total Budget	2022-2023 Total Activity	2023-2024 DEPT
Budget Detail						
Budget Code	Description			Units	Price	Amount
DEPT	FLAGFA ANNUAL CONFERENCE			0.00	0.00	100.00
DEPT	MEAL & MILEAGE			0.00	0.00	200.00
001-4160-519-4200	POSTAGE, FRT, EXPRESS	100.00	0.00	100.00	0.00	100.00
001-4160-519-4400	RENTALS & LEASES	1,300.00	345.02	1,400.00	0.00	600.00
Budget Detail						
Budget Code	Description			Units	Price	Amount
DEPT	CYLINDER TANK RENTAL			0.00	0.00	600.00
001-4160-519-4500	INSURANCE/NON-EMPLOYEE	7,938.00	7,931.41	9,770.00	9,752.56	13,087.00
Budget Detail						
Budget Code	Description			Units	Price	Amount
DEPT	BROWN & BROWN PACKAGE POLICY			0.00	0.00	13,087.00
001-4160-519-4601	REPAIRS & MAINTENANCE	2,100.00	748.42	1,900.00	1,142.11	2,200.00
Budget Detail						
Budget Code	Description			Units	Price	Amount
DEPT	LIFT MAINTENANCE			0.00	0.00	1,100.00
DEPT	MISC SHOP EQ REPAIRS			0.00	0.00	1,100.00
001-4160-519-4650	FLEET CHARGES	7,500.00	1,272.09	9,200.00	4,299.50	6,500.00
Budget Detail						
Budget Code	Description			Units	Price	Amount
DEPT	BUCKET TRUCK ANNUAL CERTIFICATION			0.00	0.00	1,000.00
DEPT	FLEET VEHICLE REPAIR & MAINTENANCE			0.00	0.00	3,500.00
DEPT	SCAN TOOL UPDATES			2.00	1,000.00	2,000.00
001-4160-519-4660	SMALL EQ REPAIR & MAIN	1,000.00	379.65	1,000.00	600.67	1,500.00
Budget Detail						
Budget Code	Description			Units	Price	Amount
DEPT	BATTERIES, COMPRESSORS, ETC.			0.00	0.00	1,500.00
001-4160-519-5100	OFFICE SUPPLIES	800.00	277.48	800.00	437.69	800.00
001-4160-519-5201	OPERATING SUPPLIES	7,500.00	5,474.81	8,950.00	3,566.12	9,400.00
Budget Detail						
Budget Code	Description			Units	Price	Amount
DEPT	BOLTS, NUTS			0.00	0.00	550.00

Attachment: Holly Hill Budget FY23_24 SECOND HEARING (2023-R-52 : Final Budget Fiscal Year 2023

Budget Worksheet

For Fiscal: 2023-2024 Period Ending: 09/30/2024

Defined Budgets

		2021-2022 Total Budget	2021-2022 Total Activity	2022-2023 Total Budget	2022-2023 Total Activity		2023-2024 DEPT
DEPT	BRAKE CLEANER, CARB CLEANER, DEGREASER			0.00	0.00	2,200.00	
DEPT	CAR WASH SOAP			0.00	0.00	1,500.00	
DEPT	ELEC CONNECTORS, CABLE, WIRE			0.00	0.00	1,800.00	
DEPT	REPLACEMENT AIR HOSES			0.00	0.00	300.00	
DEPT	REPLACEMENT FIRE EXT			0.00	0.00	400.00	
DEPT	SAFETY VESTS, RAIN GEAR, BOOTS, ETC.			0.00	0.00	400.00	
DEPT	WASP SPRAY			0.00	0.00	200.00	
DEPT	WHEEL WEIGHTS			0.00	0.00	300.00	
DEPT	WINDSHIELD WASHER FLUID			0.00	0.00	250.00	
DEPT	WIPER RAG CLEANING/REPLACMENT			0.00	0.00	1,500.00	
001-4160-519-5202	COMPUTERS	3,600.00	3,598.01	2,000.00	0.00		2,000.00
Budget Detail							
Budget Code	Description			Units	Price	Amount	
DEPT	DIAGNOSTIC REFERENCE SOFTWARE			0.00	0.00	2,000.00	
001-4160-519-5204	SMALL TOOLS & EQUIPMENT	3,800.00	2,198.73	4,000.00	748.53		2,000.00
Budget Detail							
Budget Code	Description			Units	Price	Amount	
DEPT	MISC SHOP TOOLS			0.00	0.00	2,000.00	
001-4160-519-5219	UNIFORM EXPENSE	900.00	618.76	900.00	1,042.44		900.00
Budget Detail							
Budget Code	Description			Units	Price	Amount	
DEPT	EMPLOYEES			3.00	300.00	900.00	
001-4160-519-5250	FUEL & OIL SUPPLIES	5,700.00	3,097.55	12,000.00	3,792.20		10,000.00
001-4160-519-5264	MACH/EQUIP CAPITAL-LIKE	6,972.00	6,018.58	0.00	0.00		3,000.00
Budget Detail							
Budget Code	Description			Units	Price	Amount	
DEPT	275 GALLON OIL TANKS 2 @ $1,500 EACH			0.00	0.00	3,000.00	
001-4160-519-5400	BOOKS/PUBL/SUBSCR/MEMBE...	50.00	0.00	50.00	0.00		0.00
001-4160-519-5501	TRAINING & EDUCATION COST	3,000.00	113.25	3,200.00	0.00		3,200.00
Budget Detail							
Budget Code	Description			Units	Price	Amount	
DEPT	FLAGFA ANNUAL CONFERENCE			0.00	0.00	500.00	
DEPT	MISC TRAINING: FLAGFA, ASE, SAFETY, ETC.			0.00	0.00	2,400.00	

Attachment: Holly Hill Budget FY23_24 SECOND HEARING (2023-R-52 : Final Budget Fiscal Year 2023

Budget Worksheet

For Fiscal: 2023-2024 Period Ending: 09/30/2024

Defined Budgets

		2021-2022 Total Budget	2021-2022 Total Activity	2022-2023 Total Budget	2022-2023 Total Activity	2023-2024 DEPT
DEPT	MISC. TRAINING AND STUDY MATERIALS			0.00	0.00 300.00	
	Division: 4160 - PUBLIC WORKS/FLEET Total:	295,560.00	226,601.65	313,220.00	256,524.60	332,664.00
Division: 4172 - BLDG & GROUNDS/FACI						
001-4172-572-1200	REGULAR SALARIES & WAGE	269,047.00	269,046.82	305,000.00	245,050.36	292,982.00
Budget Detail						
Budget Code	Description			Units	Price	Amount
DEPT	B&G REGULAR SALARIES & WAGES TOTAL			0.00	0.00	292,982.00
DEPT	CUSTODIAN I			2.00	0.00	0.00
DEPT	CUSTODIAN II			1.00	0.00	0.00
DEPT	EQUIP OPER/MAINT WORKER I			1.00	0.00	0.00
DEPT	FACILITIES SUPERVISOR			1.00	0.00	0.00
DEPT	PW PROJECT MANAGER			0.30	0.00	0.00
DEPT	TRADESWORKER			1.00	0.00	0.00
001-4172-572-1300	OTHER SALARIES & WAGES	4,700.00	2,471.20	5,000.00	2,816.00	7,488.00
Budget Detail						
Budget Code	Description			Units	Price	Amount
DEPT	Custodian PT			1.00	7,488.00	7,488.00
001-4172-572-1400	OVERTIME	3,093.00	3,092.90	3,000.00	1,877.80	1,945.00
001-4172-572-1510	INCENTIVE PAY	740.00	740.00	600.00	1,125.00	780.00
Budget Detail						
Budget Code	Description			Units	Price	Amount
DEPT	CELL PHONE			0.00	0.00	780.00
001-4172-572-1520	UNIFORM ALLOWANCE	200.00	200.00	200.00	200.00	60.00
Budget Detail						
Budget Code	Description			Units	Price	Amount
DEPT	CLOTHING ALLOWANCE - PW PROJECT			0.00	0.00	60.00
001-4172-572-1530	BOOT ALLOWANCE	960.00	960.00	720.00	1,200.00	756.00
Budget Detail						
Budget Code	Description			Units	Price	Amount
DEPT	BOOT ALLOWANCE -			6.00	120.00	720.00
DEPT	BOOT ALLOWANCE - PW PROJECT MGR			0.00	0.00	36.00
001-4172-572-1540	INCENTIVE AUTO	200.00	200.00	0.00	1,100.00	360.00

Attachment: Holly Hill Budget FY23_24 SECOND HEARING (2023-R-52 : Final Budget Fiscal Year 2023

Budget Worksheet

For Fiscal: 2023-2024 Period Ending: 09/30/2024

Defined Budgets

		2021-2022 Total Budget	2021-2022 Total Activity	2022-2023 Total Budget	2022-2023 Total Activity	2023-2024 DEPT
Budget Detail						
Budget Code	Description			Units	Price	Amount
DEPT	AUTO ALLOWANCE			1.00	360.00	360.00
001-4172-572-2100	FICA/MEDICARE TAXES	20,801.00	20,800.47	20,200.00	19,009.33	23,330.00
001-4172-572-2200	RETIREMENT CONTRIBUTION	32,987.00	32,986.95	35,000.00	33,422.75	44,880.00
001-4172-572-2300	LIFE & HEALTH INSURANCE	65,100.00	58,517.33	75,000.00	56,074.23	60,720.00
Budget Detail						
Budget Code	Description			Units	Price	Amount
DEPT	HEALTH INSURANCE			1.00	59,600.00	59,600.00
DEPT	LIFE INSURANCE			0.00	0.00	1,120.00
001-4172-572-2400	WORKERS COMP INSURANCE	5,200.00	3,951.81	6,200.00	4,548.22	6,870.00
001-4172-572-3101	PROFESSIONAL SERVICES	300.00	260.00	300.00	150.00	300.00
Budget Detail						
Budget Code	Description			Units	Price	Amount
DEPT	CITY HALL ELEVATOR OPERATING PERMITS			0.00	0.00	200.00
DEPT	FDOH FOOD HYGIENE FEES - SICA HALL			0.00	0.00	100.00
001-4172-572-3400	OTHER SERVICES	79,960.00	53,941.67	82,100.00	80,970.19	69,800.00
Budget Detail						
Budget Code	Description			Units	Price	Amount
DEPT	FERTILIZATION, PEST & LANDSCAPING CONTROL GROUNDS			0.00	0.00	5,000.00
DEPT	FIRE ALARMS CONTRACTS AND INSPECTIONS			0.00	0.00	2,000.00
DEPT	LAWN MAINTENANCE - SUNRISE PARK, CITY HALL			0.00	0.00	12,000.00
DEPT	SECURITY ALARMS (CH, PD, SICA, B&G, CHA)			0.00	0.00	3,400.00
DEPT	WIFI SERVICES AT SICA HALL, CLUB HOUSE			0.00	0.00	2,400.00
DEPT	YMCA CONTRACT			0.00	0.00	45,000.00
001-4172-572-3420	LANDSCAPING SERVICES	117,000.00	90,583.72	144,950.00	132,191.60	120,000.00
001-4172-572-4001	TRAVEL & PER DIEM	400.00	29.37	200.00	0.00	200.00
001-4172-572-4200	POSTAGE, FRT, EXPRESS	100.00	4.47	100.00	5.95	100.00
001-4172-572-4301	UTILITY SERVICES	363,025.00	363,024.18	400,000.00	354,373.56	400,000.00

Attachment: Holly Hill Budget FY23_24 SECOND HEARING (2023-R-52 : Final Budget Fiscal Year 2023

Budget Worksheet

For Fiscal: 2023-2024 Period Ending: 09/30/2024

Defined Budgets

		2021-2022 Total Budget	2021-2022 Total Activity	2022-2023 Total Budget	2022-2023 Total Activity	2023-2024 DEPT
Budget Detail						
Budget Code	Description			Units	Price	Amount
DEPT	BOYS & GIRLS CLUB UTILITIES			0.00	0.00	10,000.00
DEPT	FPL AND TECO ALL ACCOUNTS			0.00	0.00	340,000.00
DEPT	WATER ALL ACCOUNTS			0.00	0.00	50,000.00
001-4172-572-4400	RENTALS & LEASES	0.00	0.00	1,500.00	0.00	2,000.00
Budget Detail						
Budget Code	Description			Units	Price	Amount
DEPT	MISC RENTALS (DITCH WITCH, ETC.)			0.00	0.00	2,000.00
001-4172-572-4500	INSURANCE/NON-EMPLOYEE	10,797.00	10,787.91	8,108.00	8,093.16	21,013.00
Budget Detail						
Budget Code	Description			Units	Price	Amount
DEPT	BROWN & BROWN PACKAGE POLICY			0.00	0.00	21,013.00
001-4172-572-4601	REPAIRS & MAINTENANCE	182,365.00	97,960.36	102,139.00	82,732.65	132,500.00
Budget Detail						
Budget Code	Description			Units	Price	Amount
DEPT	A/C MAINTENANCE ON 48 UNITS			0.00	0.00	20,000.00
DEPT	ANNUAL PARK RESTROOM INSPECTION & REJUVENATION			0.00	0.00	3,000.00
DEPT	BOYS & GIRLS CLUB MISC REPAIR & MAINTENANCE			0.00	0.00	2,000.00
DEPT	CITY HALL ANNEX REPAIR & MAINTENANCE			0.00	0.00	4,000.00
DEPT	CITY HALL LIFT & ELEVATOR REPAIRS			0.00	0.00	23,000.00
DEPT	CITY HALL REPAIR & MAINTENANCE			0.00	0.00	10,000.00
DEPT	CLUB HOUSE REPAIR & MAINTENANCE			0.00	0.00	1,000.00
DEPT	FIRE DEPARTMENT REPAIR & MAINTENANCE			0.00	0.00	3,000.00
DEPT	FIRE/BURGLAR ALARM REPAIRS			0.00	0.00	1,000.00
DEPT	IRRIGATION SYSTEM REPAIRS			0.00	0.00	5,000.00
DEPT	PARK BUILDINGS & EQUIPMENT			0.00	0.00	10,000.00
DEPT	POLICE DEPARTMENT REPAIR & MAINTENANCE			0.00	0.00	5,000.00
DEPT	PROGRAMMABLE DOOR LOCKS			0.00	0.00	7,000.00
DEPT	PW YARD REPAIR & MAINTENANCE (INCLUDES FLEET)			0.00	0.00	8,000.00
DEPT	QUARTERLY SCRUB & RINSE PARK RESTROOMS			0.00	0.00	3,500.00
DEPT	SICA HALL REPAIR & MAINTENANCE			0.00	0.00	2,000.00

Attachment: Holly Hill Budget FY23_24 SECOND HEARING (2023-R-52 : Final Budget Fiscal Year 2023

		2021-2022 Total Budget	2021-2022 Total Activity	2022-2023 Total Budget	2022-2023 Total Activity	2023-2024 DEPT
	Defined Budgets					
DEPT	SUNRISE PARK SINKS, HAND DRYERS, SOAP DISPENSERS			0.00	0.00 20,000.00	
DEPT	YMCA REPAIR & MAINTENANCE (DOORS, FRAMES, ROOF)			0.00	0.00 5,000.00	
001-4172-572-4611	MAINTENANCE CONTRACTS	4,000.00	2,000.00	6,000.00	0.00	5,000.00
Budget Detail						
Budget Code	Description			Units	Price	Amount
DEPT	CITY HALL A/C MAINT AGREEMENT			0.00	0.00	5,000.00
001-4172-572-4650	FLEET CHARGES	6,600.00	3,375.03	5,000.00	3,371.41	5,000.00
001-4172-572-4660	SMALL EQ REPAIR & MAINT	2,805.00	294.32	500.00	459.24	500.00
Budget Detail						
Budget Code	Description			Units	Price	Amount
DEPT	STRING TRIMMERS, EDGERS, POLE SAWS, CHAINSAWS, ETC			0.00	0.00	500.00
001-4172-572-4670	GENERATOR REPAIR & MAIN	5,000.00	597.27	5,000.00	225.95	5,000.00
001-4172-572-4810	PROMO ACT.-SPECIAL EVENTS	6,700.00	3,676.22	22,500.00	17,883.36	6,500.00
Budget Detail						
Budget Code	Description			Units	Price	Amount
DEPT	ART FESTIVAL			0.00	0.00	1,000.00
DEPT	CRUISIN' THE HILL			0.00	0.00	1,000.00
DEPT	MISC EXPENSES FOR CHRISTMAS PARADE			0.00	0.00	2,000.00
DEPT	OTHER EVENTS (CITY WIDE CLEANUPS, ETC.)			0.00	0.00	1,500.00
DEPT	STAGE AND TENT RENTALS FOR CHRISTMAS PARADE			0.00	0.00	1,000.00
001-4172-572-4920	TREE REMOVAL	5,000.00	0.00	5,000.00	550.00	5,000.00
Budget Detail						
Budget Code	Description			Units	Price	Amount
DEPT	PARKS, GROUNDS TREE REMOVAL			0.00	0.00	5,000.00
001-4172-572-5201	OPERATING SUPPLIES	14,524.00	13,963.03	21,900.00	20,412.38	15,000.00
Budget Detail						
Budget Code	Description			Units	Price	Amount
DEPT	CLEANING SUPPLIES, GROUNDS SUPPLIES			0.00	0.00	15,000.00
001-4172-572-5204	SMALL TOOLS & EQUIPMENT	4,076.00	4,075.73	3,800.00	7,106.89	5,000.00

Attachment: Holly Hill Budget FY23_24 SECOND HEARING (2023-R-52 : Final Budget Fiscal Year 2023

Budget Worksheet

For Fiscal: 2023-2024 Period Ending: 09/30/2024

Defined Budgets

		2021-2022 Total Budget	2021-2022 Total Activity	2022-2023 Total Budget	2022-2023 Total Activity	2023-2024 DEPT
Budget Detail						
Budget Code	Description			Units	Price	Amount
DEPT	MISCELLANEOUS TOOLS - TRADESWORKER			0.00	0.00	5,000.00
001-4172-572-5210	SIGNS & MATERIALS	943.00	483.30	6,900.00	4,871.96	2,000.00
Budget Detail						
Budget Code	Description			Units	Price	Amount
DEPT	PARKS AND FACILITIES SIGNAGE			0.00	0.00	2,000.00
001-4172-572-5219	UNIFORM EXPENSE	1,400.00	1,337.92	1,400.00	1,572.91	1,400.00
Budget Detail						
Budget Code	Description			Units	Price	Amount
DEPT	UNIFORM REPAIRS (ESTIMATED)			0.00	0.00	100.00
DEPT	UNIFORMS - $200 EST EXP X 1 EMPLOYEE			0.00	0.00	200.00
DEPT	UNIFORMS - $210 EST EXPENSE X 5 EMPLOYEES			0.00	0.00	1,100.00
001-4172-572-5221	PROGRAM EXPENSE	2,000.00	1,829.52	3,000.00	2,087.51	4,000.00
Budget Detail						
Budget Code	Description			Units	Price	Amount
DEPT	REPLACEMENT BULBS, REPAIRS CHRISTMAS ORNAMENTS			0.00	0.00	1,500.00
DEPT	REPLACEMENT DECORATIONS - CITY HALL			0.00	0.00	1,500.00
DEPT	REPLACEMENT SNOW FLAKES CITY HALL			0.00	0.00	1,000.00
001-4172-572-5250	FUEL & OIL SUPPLIES	8,557.00	8,556.31	10,000.00	7,321.04	8,600.00
Budget Detail						
Budget Code	Description			Units	Price	Amount
DEPT	ENGINE OIL FOR VEHICLES/EQUIPMENT			0.00	0.00	800.00
DEPT	FUEL FOR FACILITIES			0.00	0.00	7,000.00
DEPT	HYDRAULIC OIL FOR VEHICLES/EQUIPMENT			0.00	0.00	800.00
001-4172-572-5264	MACH/EQUIP CAPITAL-LIKE	11,402.00	11,401.62	0.00	0.00	0.00
001-4172-572-5501	TRAINING & EDUCATION COST	0.00	0.00	3,700.00	0.00	3,700.00
Budget Detail						
Budget Code	Description			Units	Price	Amount
DEPT	MISC TRAINING COURSES: PEST, LAWN, SAFETY			0.00	0.00	1,000.00
DEPT	PMP TEST/CERTIFICATION (PMI)			0.00	0.00	300.00
DEPT	PMP TRANING (KNOWLEDGE BASE ACADEMY)			0.00	0.00	1,200.00

Attachment: Holly Hill Budget FY23_24 SECOND HEARING (2023-R-52 : Final Budget Fiscal Year 2023

Budget Worksheet

For Fiscal: 2023-2024 Period Ending: 09/30/2024

		2021-2022 Total Budget	2021-2022 Total Activity	2022-2023 Total Budget	2022-2023 Total Activity	Defined Budgets 2023-2024 DEPT
DEPT	TRADESWORKER TRAINING (HVAC, ETC.)			0.00	0.00 1,200.00	
	Division: 4172 - BLDG & GROUNDS/FACI Total:	1,229,982.00	1,061,149.43	1,285,017.00	1,090,803.45	1,252,784.00
Division: 8110 - NON-DEPARTMENTAL						
001-8110-580-4930	ADMIN SERV FEE ALLOCATION	27,163.00	27,163.00	24,972.00	24,972.00	38,767.00
Budget Detail						
Budget Code	Description			Units	Price	Amount
DEPT	PW ADMIN ALLOC			1.00	38,767.00	38,767.00
001-8110-580-4959	BAD DEBT EXPENSE	0.00	-1,543.84	0.00	330.06	0.00
001-8110-580-6400	MACHINERY & EQUIPMENT	404,480.00	298,005.08	299,510.00	298,485.90	185,000.00
Budget Detail						
Budget Code	Description			Units	Price	Amount
DEPT	3 EA POLICE VEHICLES (FORD EXPLORER INTERCEPTOR)			0.00	0.00	168,000.00
DEPT	SCAG 61" REAR DISCH ZSRO TRN MOWER			0.00	0.00	17,000.00
001-8110-581-0301	TRANSFER TO CAPITAL PROJEC...	0.00	0.00	0.00	0.00	88,000.00
001-8110-581-9104	TRANSFER TO PERMITTING 004	144,243.00	144,243.00	179,675.00	179,675.00	155,782.00
001-8110-581-9131	TRSFR TO CAPITAL PROJECTS	3,975,000.00	3,975,000.00	60,100.00	65,000.00	0.00
001-8110-581-9160	TRANSFER TO CAPITAL PRJCT	567,226.00	567,226.00	0.00	0.00	0.00
001-8110-581-9190	TRANSFER TO OTHER FUNDS	0.00	0.00	0.00	1,000,000.00	0.00
001-8110-589-9910	CONTINGENCY	46,619.00	0.00	22,484.00	0.00	105,331.00
001-8110-591-9300	INTEREST EXPENSE - SBITA	0.00	1,719.00	0.00	0.00	0.00
	Division: 8110 - NON-DEPARTMENTAL Total:	5,164,731.00	5,011,812.24	586,741.00	1,568,462.96	572,880.00
	Fund: 001 - GENERAL FUND Surplus (Deficit):	0.00	-2,642,395.93	-5,000.00	558,849.85	0.00

Attachment: Holly Hill Budget FY23_24 SECOND HEARING (2023-R-52 : Final Budget Fiscal Year 2023

Attachment: Holly Hill Budget FY23_24 SECOND HEARING (2023-R-52 : Final Budget Fiscal Year 2023

HOLLY HILL
FLORIDA

LOCAL OPTION FUEL TAX (002)
REVENUE & EXPENDITURES

Budget FY 2023 - 2024

Budget Worksheet

For Fiscal: 2023-2024 Period Ending: 09/30/2024

		2021-2022 Total Budget	2021-2022 Total Activity	2022-2023 Total Budget	2022-2023 Total Activity	Defined Budgets 2023-2024 DEPT
Fund: 002 - LOCAL OPTION FUEL TAX						
Division: 0000 - UNDESIGNATED						
002-0000-312-4210	SECOND LOCAL OPTION TAXES	131,781.00	130,666.02	131,151.00	99,795.90	133,711.00
002-0000-331-5010	ECONOMIC ENVIRONMENT/CD...	0.00	0.00	98,055.00	0.00	0.00
002-0000-344-0495	MOBILITY FEE	0.00	0.00	200,000.00	200,000.00	200,000.00
002-0000-361-1000	INTEREST & OTHER EARNINGS	15.00	106.66	15.00	6,607.18	1,100.00
002-0000-361-1500	INVESTMENT EARNINGS	100.00	154.24	100.00	607.99	189.00
002-0000-361-3010	INCR/DECR FAIR VAL-INVEST	0.00	-88.19	0.00	0.00	0.00
002-0000-381-0495	TRANSFER FRM 495 FUND	1,000,000.00	1,000,000.00	630.00	630.00	0.00
002-0000-389-1000	PRIOR YEAR CARRYOVER	289,000.00	0.00	1,037,222.00	0.00	0.00
	Division: 0000 - UNDESIGNATED Total:	1,420,896.00	1,130,838.73	1,467,173.00	307,641.07	335,000.00
Division: 4141 - ROADS & STREETS						
002-4141-541-4601	REPAIRS & MAINTENANCE	342,896.00	342,479.44	331,896.00	0.00	50,000.00
Budget Detail						
Budget Code	Description			Units	Price	Amount
DEPT	SIDEWALK REPLACEMENT PROGRAM			0.00	0.00	50,000.00
	Division: 4141 - ROADS & STREETS Total:	342,896.00	342,479.44	331,896.00	0.00	50,000.00
Division: 8110 - NON-DEPARTMENTAL						
002-8110-580-4601	REPAIRS & MAINTENANCE	1,078,000.00	48,214.18	1,135,277.00	799,551.51	285,000.00
Budget Detail						
Budget Code	Description			Units	Price	Amount
DEPT	ANNUAL PAVING PROGRAM			1.00	285,000.00	285,000.00
	Division: 8110 - NON-DEPARTMENTAL Total:	1,078,000.00	48,214.18	1,135,277.00	799,551.51	285,000.00
	Fund: 002 - LOCAL OPTION FUEL TAX Surplus (Deficit):	0.00	740,145.11	0.00	-491,910.44	0.00

Attachment: Holly Hill Budget FY23_24 SECOND HEARING (2023-R-52 : Final Budget Fiscal Year 2023

Attachment: Holly Hill Budget FY23_24 SECOND HEARING (2023-R-52 : Final Budget Fiscal Year 2023

HOLLY HILL
FLORIDA

BUILDING PERMITTING (004)
REVENUE & EXPENDITURES

Budget FY 2023 - 2024

Budget Worksheet

For Fiscal: 2023-2024 Period Ending: 09/30/2024

		2021-2022 Total Budget	2021-2022 Total Activity	2022-2023 Total Budget	2022-2023 Total Activity	Defined Budgets 2023-2024 DEPT
Fund: 004 - PERMITTING						
Division: 0000 - UNDESIGNATED						
004-0000-322-0000	BUILDING PERMITS	12,000.00	15,601.50	11,000.00	10,291.25	12,100.00
004-0000-322-1000	BUILDING PERMITS / BUILDING	87,000.00	106,048.32	99,000.00	140,674.36	107,600.00
004-0000-322-1100	ELECTRIC	10,000.00	10,963.00	10,000.00	14,017.00	10,800.00
004-0000-322-1200	PLUMBING	5,500.00	4,863.00	5,000.00	5,015.00	5,300.00
004-0000-322-1300	MECHANICAL PERMITS	14,427.00	15,425.50	14,000.00	16,409.25	15,100.00
004-0000-322-1600	BUILDING PERMITS / TECHNOL...	0.00	9,950.00	0.00	11,040.00	9,200.00
004-0000-329-1000	OTHER PERMITS AND FEES	1,500.00	2,207.00	2,000.00	2,677.00	2,200.00
004-0000-329-1011	APLIC FEE-RES BLDG PERMIT	21,000.00	24,975.00	23,000.00	27,285.00	23,100.00
004-0000-329-1012	APLIC FEE-COM BLDG PERMIT	14,800.00	14,360.00	14,000.00	13,580.00	14,900.00
004-0000-329-2000	FIRE INSPECTION FEES	2,400.00	5,605.00	3,000.00	5,755.00	3,300.00
004-0000-329-2022	SECOND RE-INSPECTION	225.00	750.00	300.00	640.00	300.00
004-0000-329-2023	THIRD RE-INSPECTION	60.00	100.00	70.00	300.00	0.00
004-0000-329-2024	FOURTH/ADDL RE-INSPECTNS	0.00	100.00	30.00	0.00	0.00
004-0000-329-2120	CONSULTANT PASS-THRU FEES	25.00	0.00	10.00	0.00	0.00
004-0000-329-2130	O/S-PERMIT INSPECTIONS	2,000.00	18,976.25	10,000.00	72,382.35	23,200.00
004-0000-329-2131	O/S-PERMIT RE-INSPECTIONS	0.00	0.00	0.00	120.00	0.00
004-0000-329-3030	CHANGE CONTRACTOR FEE	0.00	0.00	0.00	40.00	0.00
004-0000-329-3031	CHANGE SUB-CONTRACTOR FEE	20.00	90.00	20.00	170.00	0.00
004-0000-329-3032	PLACARD FEE	2,900.00	3,123.00	2,900.00	3,333.00	2,900.00
004-0000-329-3033	PLACARD REPLACEMENT FEE	110.00	120.00	100.00	30.00	100.00
004-0000-329-3034	PERMIT RENEWAL (ACTIVE)	1,000.00	6,710.00	3,200.00	1,840.00	2,900.00
004-0000-329-3036	CLOSEOUT-REACTV PRMT-MISC	250.00	0.00	250.00	0.00	100.00
004-0000-361-1000	INTEREST & OTHER EARNINGS	20.00	29.54	10.00	2,599.04	1,407.00
004-0000-369-9000	OTHER MISC REVENUES	400.00	660.08	420.00	139.33	0.00
004-0000-381-1001	TRANSFER FROM GENERAL FU...	144,243.00	144,243.00	179,675.00	179,675.00	155,782.00
004-0000-389-1000	PRIOR YEAR CARRYOVER	2,000.00	0.00	1,100.00	0.00	0.00
	Division: 0000 - UNDESIGNATED Total:	321,880.00	384,900.19	379,085.00	508,012.58	390,289.00

Attachment: Holly Hill Budget FY23_24 SECOND HEARING (2023-R-52 : Final Budget Fiscal Year 2023

Budget Worksheet

For Fiscal: 2023-2024 Period Ending: 09/30/2024

Defined Budgets

		2021-2022 Total Budget	2021-2022 Total Activity	2022-2023 Total Budget	2022-2023 Total Activity	2023-2024 DEPT
Division: 2415 - BLDG & FIRE INSPECT						
004-2415-524-1200	REGULAR SALARIES	222,109.00	222,108.59	249,900.00	212,434.87	243,020.00
Budget Detail						
Budget Code	Description			Units	Price	Amount
DEPT	B&Z REGULAR SALARIES TOTAL			0.00	0.00	243,020.00
DEPT	CHIEF BUILDING OFFICIAL			1.00	0.00	0.00
DEPT	COMMUNITY DEVELOPMENT DIRECTOR (.25)			1.00	0.00	0.00
DEPT	FIRE INSPECTOR/BACKFLOW INSPECTOR			1.00	0.00	0.00
DEPT	LICENSING/PERMIT/ZONING TECH			1.00	0.00	0.00
004-2415-524-1400	OVERTIME	411.00	410.84	500.00	365.58	947.00
004-2415-524-1510	INCENTIVE PAY	1,055.00	1,054.37	1,100.00	1,021.87	1,050.00
Budget Detail						
Budget Code	Description			Units	Price	Amount
DEPT	CELL PHONE ALLOWANCE			42.00	25.00	1,050.00
004-2415-524-1520	UNIFORM ALLOWANCE	400.00	150.00	400.00	150.00	150.00
004-2415-524-1530	BOOT ALLOWANCE	300.00	240.00	300.00	240.00	240.00
Budget Detail						
Budget Code	Description			Units	Price	Amount
DEPT	Boot Allowance			2.00	120.00	240.00
004-2415-524-2100	FICA/MEDICARE TAXES	16,500.00	16,268.32	19,500.00	16,048.94	18,790.00
004-2415-524-2200	RETIREMENT CONTRIBUTION	29,434.00	29,433.93	35,500.00	31,349.27	60,950.00
004-2415-524-2300	LIFE & HEALTH INSURANCE	31,285.00	31,212.34	44,300.00	26,794.84	31,640.00
Budget Detail						
Budget Code	Description			Units	Price	Amount
DEPT	HEALTH INSURANCE			1.00	30,750.00	30,750.00
DEPT	LIFE INSURANCE			0.00	0.00	890.00
004-2415-524-2400	WORKERS COMP INSURANCE	2,000.00	1,947.47	2,000.00	2,138.06	3,540.00
004-2415-524-3101	PROFESSIONAL SERVICES	1,000.00	986.00	4,000.00	4,420.00	4,000.00
Budget Detail						
Budget Code	Description			Units	Price	Amount
DEPT	UNIVERSAL INSPECTIONS, ETC			0.00	0.00	4,000.00
004-2415-524-4001	TRAVEL & PER DIEM	500.00	466.81	1,800.00	833.71	1,150.00

Attachment: Holly Hill Budget FY23_24 SECOND HEARING (2023-R-52 : Final Budget Fiscal Year 2023

Budget Worksheet

For Fiscal: 2023-2024 Period Ending: 09/30/2024

Defined Budgets

		2021-2022 Total Budget	2021-2022 Total Activity	2022-2023 Total Budget	2022-2023 Total Activity	2023-2024 DEPT
Budget Detail						
Budget Code	Description			Units	Price	Amount
DEPT	BEAU - TRAINING			0.00	0.00	250.00
DEPT	RICKIE - TRAINING			0.00	0.00	900.00
004-2415-524-4200	POSTAGE, FRT, EXPRESS	2,135.00	2,131.33	2,300.00	1,473.80	2,300.00
Budget Detail						
Budget Code	Description			Units	Price	Amount
DEPT	MAILING FEMA NOTICES THRU UTILITY BILLS			0.00	0.00	300.00
DEPT	MAILING OF BTRS			0.00	0.00	2,000.00
004-2415-524-4400	RENTALS & LEASES	900.00	803.52	900.00	618.92	900.00
004-2415-524-4500	INSURANCE/NON-EMPLOYEE	5,656.00	5,651.55	5,656.00	7,467.60	11,383.00
Budget Detail						
Budget Code	Description			Units	Price	Amount
DEPT	BROWN & BROWN PACKAGE POLICY			0.00	0.00	11,383.00
004-2415-524-4601	REPAIRS & MAINTENANCE	125.00	114.30	25.00	61.09	25.00
004-2415-524-4611	MAINTENANCE CONTRACTS	404.00	403.44	400.00	545.50	400.00
004-2415-524-4650	FLEET CHARGES	370.00	369.96	1,279.00	264.04	1,279.00
004-2415-524-4700	PRINTING & BINDING	750.00	743.16	600.00	234.00	600.00
Budget Detail						
Budget Code	Description			Units	Price	Amount
DEPT	FIRE INSPECTION NOTICES, FORMS, ETC			0.00	0.00	600.00
004-2415-524-5100	OFFICE SUPPLIES	700.00	697.22	800.00	788.58	800.00
004-2415-524-5201	OPERATING SUPPLIES	50.00	34.95	300.00	66.65	300.00
004-2415-524-5220	CLOTHING & EQUIP	250.00	247.88	600.00	0.00	600.00
Budget Detail						
Budget Code	Description			Units	Price	Amount
DEPT	BEAU - 3 SHIRTS AND 3 PANTS			0.00	0.00	240.00
DEPT	ELENI SHIRTS			0.00	0.00	120.00
DEPT	RICKIE LEE - 3 SHIRTS AND 3 PANTS			0.00	0.00	240.00
004-2415-524-5250	FUEL & OIL SUPPLIES	2,679.00	2,627.41	2,100.00	1,508.80	2,100.00
004-2415-524-5400	BOOKS/PUBL/SUBSCR/MEMBE...	1,741.00	1,741.00	3,775.00	1,727.50	2,675.00

Attachment: Holly Hill Budget FY23_24 SECOND HEARING (2023-R-52 : Final Budget Fiscal Year 2023

Budget Worksheet

For Fiscal: 2023-2024 Period Ending: 09/30/2024

Defined Budgets

		2021-2022 Total Budget	2021-2022 Total Activity	2022-2023 Total Budget	2022-2023 Total Activity	2023-2024 DEPT
Budget Detail						
Budget Code	Description			Units	Price	Amount
DEPT	ANNUAL SUBSCRIPTION TO NFPA			0.00	0.00	1,800.00
DEPT	ECFFA MEMBERSHIP			0.00	0.00	25.00
DEPT	FFMIA MEMBERSHP			0.00	0.00	175.00
DEPT	MISC BUILDING CODE UPDATES			0.00	0.00	400.00
DEPT	NFPA MEMBERSHIP			0.00	0.00	275.00
004-2415-524-5501	TRAINING & EDUCATION COST	1,126.00	877.00	1,050.00	634.00	1,450.00
Budget Detail						
Budget Code	Description			Units	Price	Amount
DEPT	BEAU CONTINUING ED FOR CERTIFICATION CREDITS			0.00	0.00	250.00
DEPT	PLANNING TECH TRAINING / CERTIFICATION			0.00	0.00	600.00
DEPT	RICKIE LEE FBOA - FOR CERTIFICATION CREDITS			0.00	0.00	600.00
Division: 2415 - BLDG & FIRE INSPECT Total:		321,880.00	320,721.39	379,085.00	311,187.62	390,289.00
Fund: 004 - PERMITTING Surplus (Deficit):		0.00	64,178.80	0.00	196,824.96	0.00

Attachment: Holly Hill Budget FY23_24 SECOND HEARING (2023-R-52 : Final Budget Fiscal Year 2023

HOLLY HILL
FLORIDA

LAW ENFORCEMENT TRUST (110)
POLICE EXPLORERS (605)
REVENUE & EXPENDITURES

Budget FY 2023 - 2024

Attachment: Holly Hill Budget FY23_24 SECOND HEARING (2023-R-52 : Final Budget Fiscal Year 2023

Budget Worksheet

For Fiscal: 2023-2024 Period Ending: 09/30/2024

		2021-2022 Total Budget	2021-2022 Total Activity	2022-2023 Total Budget	2022-2023 Total Activity	Defined Budgets 2023-2024 DEPT
Fund: 110 - LAW ENFORCEMENT TRUST FD						
Division: 0000 - UNDESIGNATED						
110-0000-358-2000	FORFEITS	15,900.00	14,304.63	0.00	3,490.84	0.00
110-0000-361-1000	INTEREST & OTHER EARNINGS	0.00	4.26	0.00	93.02	0.00
110-0000-361-1500	INVESTMENT EARNINGS	0.00	214.54	0.00	845.60	0.00
110-0000-361-3010	INCR/DECR FAIR VAL-INVEST	0.00	-122.65	0.00	0.00	0.00
110-0000-389-1000	PRIOR YEAR CARRYOVER	0.00	0.00	15,900.00	0.00	0.00
	Division: 0000 - UNDESIGNATED Total:	15,900.00	14,400.78	15,900.00	4,429.46	0.00
Division: 8110 - NON-DEPARTMENTAL						
110-8110-581-9101	TRANSFER TO GENERAL FUND	15,900.00	15,900.00	15,900.00	15,900.00	0.00
	Division: 8110 - NON-DEPARTMENTAL Total:	15,900.00	15,900.00	15,900.00	15,900.00	0.00
	Fund: 110 - LAW ENFORCEMENT TRUST FD Surplus (Deficit):	0.00	-1,499.22	0.00	-11,470.54	0.00

Attachment: Holly Hill Budget FY23_24 SECOND HEARING (2023-R-52 : Final Budget Fiscal Year 2023

Budget Worksheet

For Fiscal: 2023-2024 Period Ending: 09/30/2024

		2021-2022 Total Budget	2021-2022 Total Activity	2022-2023 Total Budget	2022-2023 Total Activity	Defined Budgets 2023-2024 DEPT
Fund: 605 - POLICE EXPLORERS						
Division: 0000 - UNDESIGNATED						
605-0000-347-2100	PROGRAM ACTIVITY FEES	2,100.00	1,111.98	1,700.00	-221.37	500.00
605-0000-366-9015	CNTRB & DON/PRIV SOURCE	850.00	250.00	1,200.00	4,356.00	1,500.00
605-0000-389-1000	PRIOR YEAR CARRYOVER	1,700.00	0.00	2,200.00	0.00	1,195.00
	Division: 0000 - UNDESIGNATED Total:	4,650.00	1,361.98	5,100.00	4,134.63	3,195.00
Division: 2110 - PUBLIC SAFETY						
605-2110-521-5220	CLOTHING & EQ	800.00	0.00	800.00	455.86	800.00
605-2110-521-5221	PROGRAM EXPENSE	3,850.00	2,799.19	4,300.00	2,937.06	2,395.00
	Division: 2110 - PUBLIC SAFETY Total:	4,650.00	2,799.19	5,100.00	3,392.92	3,195.00
	Fund: 605 - POLICE EXPLORERS Surplus (Deficit):	0.00	-1,437.21	0.00	741.71	0.00
	Report Surplus (Deficit):	0.00	2,683,801.44	-155,000.00	-1,009,836.54	0.00

Attachment: Holly Hill Budget FY23_24 SECOND HEARING (2023-R-52 : Final Budget Fiscal Year 2023

Attachment: Holly Hill Budget FY23_24 SECOND HEARING (2023-R-52 : Final Budget Fiscal Year 2023

HOLLY HILL
FLORIDA

COMMUNITY REDEVLOPMENT (130)

REVENUE & EXPENDITURES

Budget FY 2023 - 2024

Budget Worksheet

For Fiscal: 2023-2024 Period Ending: 09/30/2024

Defined Budgets

		2021-2022 Total Budget	2021-2022 Total Activity	2022-2023 Total Budget	2022-2023 Total Activity	2023-2024 DEPT
Fund: 130 - COMMUNITY REDEVELOPMT						
Division: 0000 - UNDESIGNATED						
130-0000-311-1000	AD-VALOREM TAXES	1,292,387.00	1,289,675.00	1,463,810.00	1,461,831.00	1,681,479.00
Budget Detail						
Budget Code	Description			Units	Price	Amount
DEPT	BASED ON CRA ASSESSMENT FROM PROPERTY APPRAISER			0.00	0.00	-1,681,479.00
130-0000-338-3000	INTERLOCAL SHARE TIF	1,408,019.00	1,442,101.93	1,476,996.00	1,490,704.30	1,560,924.00
Budget Detail						
Budget Code	Description			Units	Price	Amount
DEPT	HALIFAX HOSPITAL			0.00	0.00	-211,947.00
DEPT	VOLUSIA COUNTY FUNDS TOTAL			0.00	0.00	-1,348,977.00
130-0000-347-4000	EVENTS	0.00	0.00	0.00	25,396.42	0.00
130-0000-361-1000	INTEREST & OTHER EARNINGS	330.00	530.10	500.00	16,066.20	10,000.00
130-0000-361-1500	INVESTMENT EARNINGS	13,818.00	32,705.25	16,900.00	128,885.05	30,000.00
130-0000-361-3010	INCR/DECR FAIR VAL-INVEST	0.00	-18,693.94	0.00	0.00	0.00
130-0000-364-4100	DISPOS. OF FIXED ASSETS	0.00	182,975.00	0.00	17,025.00	0.00
130-0000-366-9000	CNTRB & DON/PRIV SOURCE	7,500.00	0.00	0.00	869.00	0.00
130-0000-389-1000	PRIOR YEAR CARRYOVER	4,284,207.00	0.00	70,208.00	0.00	0.00
	Division: 0000 - UNDESIGNATED Total:	7,006,261.00	2,929,293.34	3,028,414.00	3,140,776.97	3,282,403.00
Division: 2110 - PUBLIC SAFETY						
130-2110-521-1200	REGULAR SALARIES	145,700.00	81,923.10	156,000.00	79,724.10	177,251.00
Budget Detail						
Budget Code	Description			Units	Price	Amount
DEPT	PD CRA REGULAR SALARIES TOTAL			0.00	0.00	177,251.00
DEPT	POLICE OFFICER CRA LAW			1.00	0.00	
DEPT	POLICE OFFICER CRA LAW I			1.00	0.00	
DEPT	SERGEANT CRA LAW			1.00	0.00	
130-2110-521-1400	OVERTIME	12,477.00	9,272.37	13,600.00	6,061.88	14,910.00
130-2110-521-1500	INCENTIVE PAY	1,020.00	1,020.00	1,000.00	660.00	720.00
130-2110-521-1510	CELL PHONE ALLOWANCE	603.00	602.50	600.00	562.50	600.00
Budget Detail						
Budget Code	Description			Units	Price	Amount
DEPT	CELL PHONE ALLOWANCE (1)			0.00	0.00	600.00

Attachment: Holly Hill Budget FY23_24 SECOND HEARING (2023-R-52 : Final Budget Fiscal Year 2023

Budget Worksheet

For Fiscal: 2023-2024 Period Ending: 09/30/2024

Defined Budgets

		2021-2022 Total Budget	2021-2022 Total Activity	2022-2023 Total Budget	2022-2023 Total Activity	2023-2024 DEPT
130-2110-521-1530	BOOT ALLOWANCE	400.00	360.00	400.00	120.00	360.00
130-2110-521-2100	FICA TAXES	12,500.00	6,910.59	13,500.00	6,459.25	14,840.00
130-2110-521-2200	RETIREMENT CONTRIBUTION	37,000.00	21,530.54	39,500.00	20,073.60	39,750.00
130-2110-521-2300	LIFE & HEALTH INSURANCE	33,600.00	13,965.20	35,500.00	11,895.77	28,950.00

Budget Detail

Budget Code	Description	Units	Price	Amount
DEPT	HEALTH INSURANCE	1.00	28,380.00	28,380.00
DEPT	LIFE INSURANCE	0.00	0.00	570.00

130-2110-521-2400	WORKERS COMP INSURANCE	2,900.00	1,622.75	2,900.00	1,617.78	4,130.00
130-2110-521-4001	TRAVEL & PER DIEM	500.00	54.00	1,000.00	120.00	1,000.00
130-2110-521-4200	POSTAGE, FRT, EXPRESS	100.00	1.59	100.00	0.00	100.00
130-2110-521-4500	INSURANCE/NON-EMPLOYEE	5,358.00	5,354.04	6,633.00	6,621.16	9,815.00

Budget Detail

Budget Code	Description	Units	Price	Amount
DEPT	BROWN & BROWN PACKAGE POLICY	0.00	0.00	9,815.00

130-2110-521-4601	REPAIRS & MAINTENANCE	1,200.00	55.00	1,200.00	68.54	800.00

Budget Detail

Budget Code	Description	Units	Price	Amount
DEPT	CALIBRATIONS	0.00	0.00	600.00
DEPT	RADIO REPAIRS AND MAINTENANCE	0.00	0.00	200.00

130-2110-521-4611	MAINTENANCE CONTRACTS	2,850.00	1,836.00	2,850.00	1,850.00	4,350.00

Budget Detail

Budget Code	Description	Units	Price	Amount
DEPT	AXON BODY CAM MAINTENANCE-3	0.00	0.00	1,850.00
DEPT	AZON-TASER- MAINTENANCE- 3	0.00	0.00	2,500.00

130-2110-521-4650	FLEET CHARGES	2,500.00	2,419.25	2,500.00	2,740.96	2,500.00
130-2110-521-4659	PORTN OF 4650 REIMB BY EE	-2,185.00	-1,457.01	-2,185.00	-1,234.68	-2,185.00
130-2110-521-4700	PRINTING & BINDING	397.00	342.50	700.00	112.10	700.00
130-2110-521-5100	OFFICE SUPPLIES	88.00	87.34	750.00	312.11	750.00
130-2110-521-5201	OPERATING SUPPLIES	5,015.00	5,014.01	6,000.00	4,531.26	7,900.00

Budget Detail

Budget Code	Description	Units	Price	Amount
DEPT	AMMO	0.00	0.00	1,500.00

Attachment: Holly Hill Budget FY23_24 SECOND HEARING (2023-R-52 : Final Budget Fiscal Year 2023

Budget Worksheet

For Fiscal: 2023-2024 Period Ending: 09/30/2024

		2021-2022 Total Budget	2021-2022 Total Activity	2022-2023 Total Budget	2022-2023 Total Activity		2023-2024 DEPT
				Defined Budgets			
DEPT	EVIDENCE SUPPLIES			0.00	0.00	500.00	
DEPT	GLOVES			0.00	0.00	1,000.00	
DEPT	MISC OPERATING SUPPLIES			0.00	0.00	500.00	
DEPT	MOVIES WITH A COP			6.00	450.00	2,700.00	
DEPT	SADY MATS			4.00	350.00	1,400.00	
DEPT	TRAINING SUPPLIES			0.00	0.00	300.00	
130-2110-521-5220	CLOTHING & EQUIP	4,985.00	3,578.83	5,300.00	1,762.05		3,980.00
Budget Detail							
Budget Code	Description			Units	Price	Amount	
DEPT	EQUIPMENT REPLACEMENT			0.00	0.00	800.00	
DEPT	REPLACEMENT FIREARMS			3.00	410.00	1,230.00	
DEPT	REPLACEMENT VEST			1.00	450.00	450.00	
DEPT	UNIFORM REPLACEMENT			0.00	0.00	1,500.00	
130-2110-521-5250	FUEL & OIL SUPPLIES	10,000.00	5,989.59	10,000.00	3,157.65		8,500.00
130-2110-521-5501	TRAINING & EDUCATION COST	2,200.00	973.70	2,500.00	874.48		2,350.00
Budget Detail							
Budget Code	Description			Units	Price	Amount	
DEPT	AXON-TASER TRAINING			0.00	0.00	100.00	
DEPT	PLI			3.00	150.00	450.00	
DEPT	TARGET SOLUTIONS			3.00	100.00	300.00	
DEPT	TARGET SOLUTIONS MAINTENANCE			0.00	0.00	200.00	
DEPT	TRAINING AND EDUCATION			0.00	0.00	1,300.00	
	Division: 2110 - PUBLIC SAFETY Total:	279,208.00	161,455.89	300,348.00	148,090.51		322,071.00
Division: 2410 - PLANNING & CODE ENF							
130-2410-524-1200	REGULAR SALARIES	20,200.00	19,305.73	21,300.00	30,213.34		36,321.00
Budget Detail							
Budget Code	Description			Units	Price	Amount	
DEPT	CLERICAL ASSISTANT			0.30	0.00		
DEPT	CODE ENFORCEMENT CRA REGULAR SALARIES TOTAL			0.00	0.00	36,321.00	
DEPT	CODE ENFORCEMENT II			0.50	0.00		
130-2410-524-1400	OVERTIME	100.00	0.00	100.00	2.00		377.00
130-2410-524-1510	INCENTIVE PAY	500.00	306.25	200.00	281.25		300.00

Attachment: Holly Hill Budget FY23_24 SECOND HEARING (2023-R-52 : Final Budget Fiscal Year 2023

Budget Worksheet

For Fiscal: 2023-2024 Period Ending: 09/30/2024

Defined Budgets

		2021-2022 Total Budget	2021-2022 Total Activity	2022-2023 Total Budget	2022-2023 Total Activity	2023-2024 DEPT
Budget Detail						
Budget Code	Description			Units	Price	Amount
DEPT	CELL PHONE ALLOWANCE			12.00	25.00	300.00
130-2410-524-1520	UNIFORM ALLOWANCE	0.00	0.00	0.00	0.00	80.00
130-2410-524-1530	BOOT ALLOWANCE	100.00	60.00	100.00	60.00	60.00
Budget Detail						
Budget Code	Description			Units	Price	Amount
DEPT	CRA Boot			0.50	120.00	60.00
130-2410-524-2100	FICA/MEDICARE TAXES	1,600.00	1,471.56	1,600.00	2,281.92	2,850.00
130-2410-524-2200	RETIREMENT CONTRIBUTION	2,200.00	2,149.54	2,600.00	3,721.83	4,990.00
130-2410-524-2300	LIFE & HEALTH INSURANCE	5,600.00	4,475.35	5,900.00	6,455.93	7,710.00
Budget Detail						
Budget Code	Description			Units	Price	Amount
DEPT	HEALTH INSURANCE			1.00	7,570.00	7,570.00
DEPT	LIFE INSURANCE			0.00	0.00	140.00
130-2410-524-2400	WORKERS COMP INSURANCE	300.00	251.88	300.00	298.54	540.00
130-2410-524-3101	PROFESSIONAL SERVICES	1,000.00	0.00	1,000.00	0.00	1,000.00
Budget Detail						
Budget Code	Description			Units	Price	Amount
DEPT	SPECIAL MASTER			0.00	0.00	1,000.00
130-2410-524-3150	LEGAL/OFFICIAL ADVERTISNG	200.00	0.00	200.00	0.00	200.00
Budget Detail						
Budget Code	Description			Units	Price	Amount
DEPT	LIENS, RECORDING, LEGAL			0.00	0.00	200.00
130-2410-524-3400	OTHER SERVICES	11,200.00	0.00	7,500.00	0.00	5,000.00
Budget Detail						
Budget Code	Description			Units	Price	Amount
DEPT	CODE COMPLIANCE DEMO			0.00	0.00	4,000.00
DEPT	CODE COMPLIANCE MOWING			0.00	0.00	1,000.00
130-2410-524-4200	POSTAGE, FRT, EXPRESS	1,000.00	0.00	1,500.00	0.00	750.00
Budget Detail						
Budget Code	Description			Units	Price	Amount
DEPT	VIOLATION NOTICES, NTA, ETC			0.00	0.00	750.00

Attachment: Holly Hill Budget FY23_24 SECOND HEARING (2023-R-52 : Final Budget Fiscal Year 2023

Budget Worksheet

For Fiscal: 2023-2024 Period Ending: 09/30/2024

Defined Budgets

		2021-2022 Total Budget	2021-2022 Total Activity	2022-2023 Total Budget	2022-2023 Total Activity	2023-2024 DEPT
130-2410-524-4700	PRINTING & BINDING	150.00	0.00	150.00	0.00	150.00
Budget Detail						
Budget Code	Description			Units	Price	Amount
DEPT	NOTICES, PLACARDS, ETC			0.00	0.00	150.00
130-2410-524-5100	OFFICE SUPPLIES	100.00	0.00	100.00	0.00	100.00
130-2410-524-5201	OPERATING SUPPLIES	100.00	80.00	100.00	66.65	100.00
130-2410-524-5219	UNIFORMS	100.00	0.00	120.00	0.00	50.00
Budget Detail						
Budget Code	Description			Units	Price	Amount
DEPT	SHIRT & PANTS FOR CODE OFFICER			0.00	0.00	50.00
130-2410-524-5250	FUEL & OIL SUPPLIES	800.00	547.18	800.00	892.29	800.00
	Division: 2410 - PLANNING & CODE ENF Total:	45,250.00	28,647.49	43,570.00	44,273.75	61,378.00
Division: 4173 - ADULT CTR/PICKLEBAL						
130-4173-572-3400	OTHER SERVICES	84,000.00	61,877.35	106,608.00	104,458.44	92,400.00
Budget Detail						
Budget Code	Description			Units	Price	Amount
DEPT	ALARM MONITORING			0.00	0.00	3,600.00
DEPT	CONTRACT MGT OF PICTONA (SR ACTIVITY CENTER)			0.00	0.00	82,800.00
DEPT	ELEVATOR MAINTENANCE			0.00	0.00	6,000.00
130-4173-572-3420	LANDSCAPING SERVICES	13,000.00	13,000.00	26,800.00	23,504.99	33,000.00
Budget Detail						
Budget Code	Description			Units	Price	Amount
DEPT	MOWING SERVICES INCLUDING MULCHING			0.00	0.00	33,000.00
130-4173-572-4301	UTILITY SERVICES	43,000.00	42,409.06	43,000.00	66,251.65	59,880.00
Budget Detail						
Budget Code	Description			Units	Price	Amount
DEPT	ELECTRIC (12 * 3,300.)			0.00	0.00	39,600.00
DEPT	GAS/GAS DISTRIBUTION (12@ 240.)			0.00	0.00	2,880.00
DEPT	WATER/SEWER (12 @ 1,450.)			0.00	0.00	17,400.00
130-4173-572-4500	INSURANCE/NON-EMPLOYEE	16,674.00	16,660.08	20,975.00	20,938.28	33,187.00
Budget Detail						
Budget Code	Description			Units	Price	Amount
DEPT	BROWN AND BROWN PACKAGE POLICY			0.00	0.00	33,187.00

Attachment: Holly Hill Budget FY23_24 SECOND HEARING (2023-R-52 : Final Budget Fiscal Year 2023

Budget Worksheet

For Fiscal: 2023-2024 Period Ending: 09/30/2024

		2021-2022 Total Budget	2021-2022 Total Activity	2022-2023 Total Budget	2022-2023 Total Activity	Defined Budgets 2023-2024 DEPT
130-4173-572-4601	REPAIRS & MAINTENANCE	2,100.00	153.07	13,830.00	12,241.08	8,000.00
130-4173-572-4800	PROMO.ADVERTISING ACTIV.	500.00	0.00	500.00	0.00	500.00
130-4173-572-5201	OPERATING SUPPLIES	5,000.00	0.00	2,500.00	1,094.50	2,500.00
130-4173-572-5210	PARKS & RECREATION	0.00	0.00	0.00	1,880.29	0.00
	Division: 4173 - ADULT CTR/PICKLEBAL Total:	164,274.00	134,099.56	214,213.00	230,369.23	229,467.00
Division: 5510 - GENERAL ADMINISTRAT						
130-5510-514-3101	PROFESSIONAL SERVICES	48,000.00	17,766.00	56,000.00	12,430.60	56,000.00
Budget Detail						
Budget Code	Description			Units	Price	Amount
DEPT	LEGAL SERVICES			0.00	0.00	56,000.00
130-5510-552-1200	REGULAR SALARIES	51,900.00	37,410.42	51,900.00	49,978.18	56,640.00
Budget Detail						
Budget Code	Description			Units	Price	Amount
DEPT	ECONOMIC DEVELOPMENT DIRECTOR/CRA COORDINATOR			0.75	75,520.00	56,640.00
130-5510-552-1510	INCENTIVE PAY	500.00	365.62	500.00	421.87	450.00
130-5510-552-1520	UNIFORM ALLOWANCE	200.00	0.00	200.00	150.00	150.00
130-5510-552-2100	FICA/MEDICARE TAXES	4,100.00	2,741.99	4,100.00	3,652.79	4,380.00
130-5510-552-2200	RETIREMENT CONTRIBUTION	5,700.00	4,194.20	6,200.00	6,081.42	7,690.00
130-5510-552-2300	LIFE & HEALTH INSURANCE	8,500.00	6,074.92	9,000.00	6,915.08	7,330.00
Budget Detail						
Budget Code	Description			Units	Price	Amount
DEPT	HEALTH INSURANCE			0.75	9,460.25	7,100.00
DEPT	LIFE INSURANCE			0.00	0.00	230.00
130-5510-552-2400	WORKERS COMP INSURANCE	100.00	30.03	100.00	48.53	570.00
130-5510-552-3101	PROFESSIONAL SERVICES	13,400.00	13,275.00	144,400.00	35,700.00	141,400.00
Budget Detail						
Budget Code	Description			Units	Price	Amount
DEPT	ANNUAL AUDIT			0.00	0.00	5,400.00
DEPT	CRA PLAN UPDATE			0.00	0.00	100,000.00
DEPT	RICK HAMILTON CONTRACT			0.00	0.00	36,000.00
130-5510-552-3150	LEGAL/OFFICIAL ADVERTISNG	1,200.00	131.56	600.00	127.04	200.00
130-5510-552-3400	OTHER SERVICES	3,200.00	3,200.00	0.00	0.00	0.00

Attachment: Holly Hill Budget FY23_24 SECOND HEARING (2023-R-52 : Final Budget Fiscal Year 2023

Budget Worksheet

For Fiscal: 2023-2024 Period Ending: 09/30/2024

Defined Budgets

		2021-2022 Total Budget	2021-2022 Total Activity	2022-2023 Total Budget	2022-2023 Total Activity	2023-2024 DEPT
130-5510-552-3420	LANDSCAPING SERVICES	101,000.00	83,103.00	101,000.00	74,341.72	89,000.00
Budget Detail						
Budget Code	Description			Units	Price	Amount
DEPT	224 RIVERSIDE DR LANDSCAPING			0.00	0.00	2,000.00
DEPT	FERTILIZATION & PEST CONTROL			0.00	0.00	3,000.00
DEPT	MISC PLANT REPLACEMENT,IRRGATION REPAIR			0.00	0.00	4,000.00
DEPT	US1 MEDIAN LANDSCAPING/MAINTENANCE			0.00	0.00	80,000.00
130-5510-552-4001	TRAVEL & PER DIEM	1,000.00	0.00	500.00	75.00	1,000.00
130-5510-552-4200	POSTAGE, FRT, EXPRESS	166.00	0.53	200.00	0.00	500.00
Budget Detail						
Budget Code	Description			Units	Price	Amount
DEPT	INCLUDES SPECIAL EVENT MAILINGS			0.00	0.00	500.00
130-5510-552-4301	UTILITY SERVICES	16,636.00	16,635.94	17,500.00	16,268.26	17,500.00
Budget Detail						
Budget Code	Description			Units	Price	Amount
DEPT	CRA UTILITIES (ELECTRIC, WATER, SEWER, ETC)			0.00	0.00	17,500.00
130-5510-552-4400	RENTALS & LEASES	598.00	597.35	700.00	423.56	700.00
Budget Detail						
Budget Code	Description			Units	Price	Amount
DEPT	COPIER LEASE @ 25%			0.00	0.00	700.00
130-5510-552-4500	INSURANCE/NON-EMPLOYEE	1,042.00	1,041.26	1,311.00	1,308.64	2,074.00
Budget Detail						
Budget Code	Description			Units	Price	Amount
DEPT	BROWN & BROWN PACKAGE POLICY			0.00	0.00	2,074.00
130-5510-552-4601	REPAIRS & MAINTENANCE	16,300.00	1,978.42	26,000.00	16,103.13	11,000.00
Budget Detail						
Budget Code	Description			Units	Price	Amount
DEPT	1200 CENTER AVE, RIVERSIDE PARK			0.00	0.00	4,000.00
DEPT	US1 MEDIAN TREES			0.00	0.00	7,000.00
130-5510-552-4611	MAINTENANCE CONTRACTS	600.00	424.89	600.00	293.14	600.00

Attachment: Holly Hill Budget FY23_24 SECOND HEARING (2023-R-52 : Final Budget Fiscal Year 2023

Budget Worksheet

For Fiscal: 2023-2024 Period Ending: 09/30/2024

Defined Budgets

		2021-2022 Total Budget	2021-2022 Total Activity	2022-2023 Total Budget	2022-2023 Total Activity	2023-2024 DEPT
Budget Detail						
Budget Code	Description			Units	Price	Amount
DEPT	COPIER MAINTENANCE @ 25%			0.00	0.00	600.00
130-5510-552-4650	FLEET CHARGES	0.00	0.00	0.00	75.00	0.00
130-5510-552-4700	PRINTING & BINDING	300.00	147.00	100.00	48.80	500.00
130-5510-552-4800	PROMO.ADVERTISING ACTIV.	3,220.00	2,440.00	3,220.00	2,545.00	1,400.00
Budget Detail						
Budget Code	Description			Units	Price	Amount
DEPT	ECONOMIC DEVELOPMENT AD LIVABILITY VOLUSIA			0.00	0.00	1,400.00
130-5510-552-4810	SPECIAL EVENTS	17,500.00	13,151.09	159,500.00	108,010.20	66,500.00
Budget Detail						
Budget Code	Description			Units	Price	Amount
DEPT	CRUISIN THE HILL			0.00	0.00	1,000.00
DEPT	EASTER EGG HUNT			0.00	0.00	2,500.00
DEPT	EVENTS & PROMOTION			0.00	0.00	60,000.00
DEPT	NATIONAL NIGHT OUT			0.00	0.00	3,000.00
130-5510-552-4901	OTHER CHARGES	200.00	175.00	200.00	175.00	190.00
130-5510-552-4920	TREE REMOVAL	3,000.00	500.00	3,000.00	0.00	3,000.00
130-5510-552-4930	ADMIN SERV FEE ALLOCATION	68,773.00	68,773.00	92,445.00	92,445.00	98,893.00
Budget Detail						
Budget Code	Description			Units	Price	Amount
DEPT	DIRECT COST ALLOCATION - ADMINISTRATION			1.00	98,893.00	98,893.00
130-5510-552-5100	OFFICE SUPPLIES	0.00	0.00	0.00	0.00	200.00
130-5510-552-5201	OPERATING SUPPLIES	300.00	52.76	300.00	0.00	100.00
130-5510-552-5210	SIGNS & MATERIALS	165.00	0.00	500.00	321.00	1,000.00
Budget Detail						
Budget Code	Description			Units	Price	Amount
DEPT	CRA DECORATIVE STREET SIGNAGE REPLACEMENT			0.00	0.00	1,000.00
130-5510-552-5400	BOOKS/PUBL/SUBSCR/MEMBE...	7,394.00	7,394.00	7,480.00	7,480.50	10,743.00

Attachment: Holly Hill Budget FY23_24 SECOND HEARING (2023-R-52 : Final Budget Fiscal Year 2023

Budget Worksheet

For Fiscal: 2023-2024 Period Ending: 09/30/2024

Defined Budgets

		2021-2022 Total Budget	2021-2022 Total Activity	2022-2023 Total Budget	2022-2023 Total Activity	2023-2024 DEPT
Budget Detail						
Budget Code	Description			Units	Price	Amount
DEPT	FL DEVELOPMENT ASSOC MEMBERSHIP			0.00	0.00	995.00
DEPT	STATE SPECIAL DISTRICT FEE			1.00	175.00	175.00
DEPT	TEAM VOLUSIA			0.00	0.00	9,573.00
130-5510-552-5501	TRAINING & EDUCATION COST	940.00	940.00	800.00	514.95	3,000.00
Budget Detail						
Budget Code	Description			Units	Price	Amount
DEPT	FL REDEVELOPMENT CONFERENCE			0.00	0.00	1,500.00
DEPT	PROFESSIONAL DEVELOPMENT CLASSES (3)			0.00	0.00	1,500.00
130-5510-552-8201	PROPERTY IMPROVMNT GRAN...	144,000.00	18,210.00	150,000.00	5,472.00	100,000.00
Budget Detail						
Budget Code	Description			Units	Price	Amount
DEPT	PROPERTY IMP REIMBURSEMENT GRANTS			0.00	0.00	100,000.00
	Division: 5510 - GENERAL ADMINISTRAT Total:	519,934.00	300,753.98	838,356.00	441,406.41	682,710.00
Division: 8110 - NON-DEPARTMENTAL						
130-8110-517-7131	PRINCIPAL PAYMENTS / CRA D...	360,000.00	360,000.00	370,000.00	370,000.00	375,000.00
130-8110-517-7132	CRA DEBT 2013	405,000.00	405,000.00	410,000.00	410,000.00	425,000.00
130-8110-517-7231	INTEREST EXPENSE	44,505.00	44,504.87	35,518.00	35,517.12	26,344.00
130-8110-517-7232	CRA DEBT 2013	46,775.00	46,774.74	37,339.00	37,338.25	27,669.00
130-8110-580-4901	OTHER CHARGES	0.00	0.00	0.00	17,025.00	0.00
130-8110-580-6400	MACHINERY & EQUIPMENT	19,500.00	13,122.00	0.00	0.00	0.00
130-8110-581-0139	TRANSFER TO CRA CAPITAL	5,113,235.00	5,113,235.00	0.00	0.00	1,028,677.00
130-8110-581-1001	TRANSFER TO GENERAL FUND	8,580.00	8,580.00	8,580.00	8,580.00	9,923.00
Budget Detail						
Budget Code	Description			Units	Price	Amount
DEPT	PD FLEET VEHICLE REPAIR &			0.00	0.00	9,923.00
130-8110-589-9910	CONTINGENCY	0.00	0.00	770,490.00	0.00	94,164.00
	Division: 8110 - NON-DEPARTMENTAL Total:	5,997,595.00	5,991,216.61	1,631,927.00	878,460.37	1,986,777.00
	Fund: 130 - COMMUNITY REDEVELOPMT Surplus (Deficit):	0.00	-3,686,880.19	0.00	1,398,176.70	0.00

Attachment: Holly Hill Budget FY23_24 SECOND HEARING (2023-R-52 : Final Budget Fiscal Year 2023

HOLLY HILL
FLORIDA

CRA PROJECTS (139)
REVENUE & EXPENDITURES

Budget FY 2023 - 2024

Attachment: Holly Hill Budget FY23_24 SECOND HEARING (2023-R-52 : Final Budget Fiscal Year 2023

Budget Worksheet

For Fiscal: 2023-2024 Period Ending: 09/30/2024

		2021-2022 Total Budget	2021-2022 Total Activity	2022-2023 Total Budget	2022-2023 Total Activity	Defined Budgets 2023-2024 DEPT
Fund: 139 - CRA PROJECTS FUND						
Division: 0000 - UNDESIGNATED						
139-0000-337-7110	ECHO GRANT	2,500,000.00	2,229,854.32	270,146.00	270,145.58	0.00
139-0000-366-9000	CONTRIB/GRANTS/DONATIONS	1,500,000.00	0.00	0.00	0.00	0.00
139-0000-381-0130	TRANSFER FRM 130 FUND	5,113,235.00	5,113,235.00	0.00	0.00	1,028,677.00
139-0000-389-1000	PRIOR YEAR CARRYOVER	297,770.00	0.00	3,964,172.00	0.00	0.00
	Division: 0000 - UNDESIGNATED Total:	9,411,005.00	7,343,089.32	4,234,318.00	270,145.58	1,028,677.00
Division: 8110 - NON-DEPARTMENTAL						
139-8110-580-3101	PROFESSIONAL SERVICES	108,547.00	108,546.18	0.00	0.00	0.00
139-8110-580-3400	OTHER SERVICES	97,770.00	39,296.70	0.00	36,906.93	0.00
139-8110-580-6100	LAND	201,344.00	201,343.48	0.00	0.00	0.00
139-8110-580-6300	INFRASTRUCTURE	8,885,732.00	3,477,615.91	4,008,159.00	1,210,028.53	1,028,677.00
139-8110-589-9910	CONTINGENCY	117,612.00	0.00	226,159.00	0.00	0.00
	Division: 8110 - NON-DEPARTMENTAL Total:	9,411,005.00	3,826,802.27	4,234,318.00	1,246,935.46	1,028,677.00
	Fund: 139 - CRA PROJECTS FUND Surplus (Deficit):	0.00	3,516,287.05	0.00	-976,789.88	0.00

Attachment: Holly Hill Budget FY23_24 SECOND HEARING (2023-R-52 : Final Budget Fiscal Year 2023

Attachment: Holly Hill Budget FY23_24 SECOND HEARING (2023-R-52 : Final Budget Fiscal Year 2023

HOLLY HILL
FLORIDA

CAPITAL PROJECTS (301)

REVENUE & EXPENDITURES

Budget FY 2023 - 2024

Budget Worksheet

For Fiscal: 2023-2024 Period Ending: 09/30/2024

		2021-2022 Total Budget	2021-2022 Total Activity	2022-2023 Total Budget	2022-2023 Total Activity	Defined Budgets 2023-2024 DEPT
Fund: 301 - CAPITAL PROJECTS						
Division: 0000 - UNDESIGNATED						
301-0000-331-5010	CDBG GRANT	0.00	0.00	0.00	0.00	94,857.00
301-0000-331-5200	FEMA - REIMBURSEMENT	597,327.00	0.00	186,101.00	0.00	0.00
301-0000-334-5200	STATE GRANTS / FEMA - HURRI...	33,185.00	0.00	10,339.00	0.00	0.00
301-0000-361-1500	INVESTMENT EARNINGS	6,051.00	14,328.00	2,000.00	130,159.81	5,143.00
301-0000-361-3010	INCR/DECR FAIR VAL-INVEST	0.00	-10,379.80	0.00	0.00	0.00
301-0000-369-9000	OTHER MISC REVENUES	0.00	0.28	0.00	0.00	0.00
301-0000-381-0495	TRSF FROM 495 FUND	895,000.00	895,000.00	0.00	0.00	0.00
301-0000-381-1001	TRANSFER FRM GENERAL FUND	4,542,226.00	4,542,226.00	65,000.00	65,000.00	88,000.00
301-0000-389-1000	PRIOR YEAR CARRYOVER	1,256,979.00	0.00	5,950,134.00	0.00	227,000.00
	Division: 0000 - UNDESIGNATED Total:	7,330,768.00	5,441,174.48	6,213,574.00	195,159.81	415,000.00
Division: 8110 - NON-DEPARTMENTAL						
301-8110-580-6200	BUILDINGS	3,083,000.00	41,533.50	3,100,172.00	328,111.77	60,000.00
Budget Detail						
Budget Code	Description			Units	Price	Amount
DEPT	AIR CONDITIONER REPLACEMENTS			0.00	0.00	40,000.00
DEPT	YMCA A/C REPLACEMENT			0.00	0.00	20,000.00
301-8110-580-6300	INFRASTRUCTURE	3,331,355.00	759,609.02	2,578,365.00	734,141.87	350,000.00
301-8110-580-6400	MACHINERY & EQUIPMENT	862,185.00	382,126.53	480,809.00	72,858.15	5,000.00
301-8110-589-9910	CONTINGENCY	54,228.00	0.00	54,228.00	0.00	0.00
	Division: 8110 - NON-DEPARTMENTAL Total:	7,330,768.00	1,183,269.05	6,213,574.00	1,135,111.79	415,000.00
	Fund: 301 - CAPITAL PROJECTS Surplus (Deficit):	0.00	4,257,905.43	0.00	-939,951.98	0.00

Attachment: Holly Hill Budget FY23_24 SECOND HEARING (2023-R-52 : Final Budget Fiscal Year 2023

Attachment: Holly Hill Budget FY23_24 SECOND HEARING (2023-R-52 : Final Budget Fiscal Year 2023

HOLLY HILL
FLORIDA

WATER & SEWER (400)
REVENUE & EXPENDITURES

Budget FY 2023 - 2024

Budget Worksheet

For Fiscal: 2023-2024 Period Ending: 09/30/2024

Defined Budgets

		2021-2022 Total Budget	2021-2022 Total Activity	2022-2023 Total Budget	2022-2023 Total Activity	2023-2024 DEPT
Fund: 400 - WATER & SEWER FUND						
Division: 0000 - UNDESIGNATED						
400-0000-331-2700	ARPA GRANT	6,189,048.00	0.00	0.00	0.00	0.00
400-0000-341-0460	STORMWATER- INTERNAL CHA...	54,326.00	54,326.00	49,943.00	49,943.00	48,459.00
400-0000-341-0495	SOLID WASTE - INTERNAL CHA...	13,581.00	13,581.00	12,486.00	12,486.00	48,459.00
400-0000-341-1001	GENERAL FUND - INTERNAL CHG	27,163.00	27,163.00	24,972.00	24,972.00	38,767.00
400-0000-343-3000	WATER UTILITY	11,870.00	0.00	0.00	0.00	0.00
400-0000-343-3007	WATER CHARGES	3,504,071.00	3,529,538.94	3,696,795.00	3,194,944.19	3,930,119.00
Budget Detail						
Budget Code	Description			Units	Price	Amount
DEPT	5.5% INCREASE			1.00	3,930,119.00	-3,930,119.00
400-0000-343-3092	WATER METER CONNECTION	1,000.00	4,750.00	3,500.00	8,010.00	3,500.00
400-0000-343-3093	WATER SERVICE CHARGES	20,375.00	12,975.00	21,000.00	0.00	0.00
400-0000-343-3094	WATER CUT-OFF CHARGES	66,000.00	42,940.00	73,000.00	0.00	0.00
400-0000-343-3095	WATER HYDRANT RENTAL	14,382.00	14,337.00	14,000.00	13,116.00	14,112.00
400-0000-343-5057	SEWER/WASTEWATER UTILITY /..	3,682,347.00	3,650,025.95	3,744,261.00	3,418,416.55	3,998,335.00
Budget Detail						
Budget Code	Description			Units	Price	Amount
DEPT	5.5% RATE INCREASE			1.00	3,998,335.00	-3,998,335.00
400-0000-343-5070	SEWER, REUSE	0.00	1,500.00	0.00	3,600.00	0.00
400-0000-343-5072	SEWER, REUSE, COMMERCIAL	3,600.00	1,800.00	3,000.00	0.00	0.00
400-0000-343-5097	SEWER CONNECTION	0.00	300.00	0.00	600.00	0.00
400-0000-361-1000	INTEREST & OTHER EARNINGS	400.00	498.32	380.00	10,243.55	1,500.00
400-0000-361-1020	INTEREST REVENUE - LEASES	0.00	17,007.01	0.00	0.00	0.00
400-0000-361-1500	INVESTMENT EARNINGS	15,221.00	46,337.55	17,900.00	266,427.96	50,000.00
400-0000-361-3010	INCR/DECR FAIR VAL-INVEST	0.00	-28,377.95	0.00	0.00	0.00
400-0000-362-2110	T-MOBILE LEASE	34,980.00	38,146.48	34,980.00	23,424.72	20,000.00
400-0000-364-4100	DISPOS. OF FIXED ASSETS	0.00	-955.80	0.00	-85,121.37	0.00
400-0000-365-1000	SALE OF SURPLUS MATERIALS	0.00	2,409.05	0.00	2,564.14	0.00
400-0000-369-3030	INSURANCE	23,157.00	23,156.62	0.00	0.00	0.00
400-0000-369-4000	PENALTY REVENUES	0.00	-25.00	0.00	0.00	0.00
400-0000-369-7000	PENALTY REVENUES	221,000.00	204,553.42	220,000.00	304,284.52	230,177.00

Attachment: Holly Hill Budget FY23_24 SECOND HEARING (2023-R-52 : Final Budget Fiscal Year 2023

Budget Worksheet

For Fiscal: 2023-2024 Period Ending: 09/30/2024

		2021-2022 Total Budget	2021-2022 Total Activity	2022-2023 Total Budget	2022-2023 Total Activity	Defined Budgets 2023-2024 DEPT
400-0000-369-9000	MISC REVENUES	5,000.00	5,080.06	5,000.00	5,308.22	2,500.00
400-0000-381-0407	TRANS FRM CONST FUND	0.00	398,120.36	0.00	0.00	0.00
400-0000-381-0460	TRANSFER FRM STORMWATER	30,462.00	30,462.00	30,414.00	30,414.00	28,722.00
Budget Detail						
Budget Code	Description			Units	Price	Amount
DEPT	VACCOM TRUCK - 50%			1.00	-28,722.00	-28,722.00
400-0000-389-1000	PRIOR YEAR CARRYOVER	5,382,951.00	0.00	10,524,942.00	0.00	0.00
	Division: 0000 - UNDESIGNATED Total:	19,300,934.00	8,089,649.01	18,476,573.00	7,283,633.48	8,414,650.00
Division: 3001 - WATER & SEWER ADMIN						
400-3001-536-1200	REGULAR SALARIES	265,097.00	159,162.10	165,000.00	171,722.03	264,554.00
Budget Detail						
Budget Code	Description			Units	Price	Amount
DEPT	ADMINISTRATIVE ASSISTANT			1.00	0.00	
DEPT	DEPUTY DIRECTOR			1.00	0.00	
DEPT	PUBLICE WORKS DIRECTOR			1.00	0.00	
DEPT	PW ADMINISTRATION REGULAR SALARIES & WAGES TOTAL			0.00	0.00	264,554.00
400-3001-536-1400	OVERTIME	500.00	18.30	500.00	1,434.08	1,205.00
400-3001-536-1510	INCENTIVE PAY / CELL PHONE A...	603.00	602.50	600.00	687.50	1,200.00
400-3001-536-1520	UNIFORM ALLOWANCE	400.00	400.00	400.00	400.00	600.00
400-3001-536-1530	BOOT ALLOWANCE	0.00	0.00	0.00	0.00	120.00
400-3001-536-2100	FICA/MEDICARE TAXES	20,500.00	11,540.36	13,000.00	12,564.75	20,490.00
400-3001-536-2200	RETIREMENT CONTRIBUTION	49,400.00	36,574.32	31,000.00	32,221.10	49,280.00
400-3001-536-2300	LIFE & HEALTH INSURANCE	27,447.00	18,351.87	23,000.00	20,764.93	29,340.00
Budget Detail						
Budget Code	Description			Units	Price	Amount
DEPT	HEALTH INSURANCE			3.00	9,460.00	28,380.00
DEPT	LIFE INSURANCE			0.00	0.00	960.00
400-3001-536-2400	WORKERS COMP INSURANCE	3,000.00	2,452.91	1,600.00	2,526.29	7,800.00
400-3001-536-4001	TRAVEL & PER DIEM	0.00	0.00	500.00	0.00	600.00
400-3001-536-4200	POSTAGE, FRT, EXPRESS	100.00	0.53	100.00	18.40	100.00
400-3001-536-4400	RENTALS & LEASES	700.00	456.96	700.00	341.65	700.00

Attachment: Holly Hill Budget FY23_24 SECOND HEARING (2023-R-52 : Final Budget Fiscal Year 2023

Budget Worksheet

For Fiscal: 2023-2024 Period Ending: 09/30/2024

Defined Budgets

		2021-2022 Total Budget	2021-2022 Total Activity	2022-2023 Total Budget	2022-2023 Total Activity	2023-2024 DEPT
Budget Detail						
Budget Code	Description			Units	Price	Amount
DEPT	PW COPIER LEASE			0.00	0.00	700.00
400-3001-536-4500	INSURANCE/NON-EMPLOYEE	4,565.00	4,561.69	3,959.00	3,951.92	6,037.00
Budget Detail						
Budget Code	Description			Units	Price	Amount
DEPT	BROWN & BROWN PACKAGE POLICY			0.00	0.00	6,037.00
400-3001-536-4601	REPAIRS & MAINTENANCE	1,000.00	281.16	0.00	0.00	0.00
400-3001-536-4611	MAINTENANCE CONTRACTS	2,400.00	2,191.23	500.00	133.57	500.00
Budget Detail						
Budget Code	Description			Units	Price	Amount
DEPT	PW COPIER MAINTENANCE			0.00	0.00	500.00
400-3001-536-4650	FLEET CHARGES	900.00	884.69	700.00	1,612.10	1,200.00
400-3001-536-4700	PRINTING & BINDING	0.00	0.00	0.00	52.25	0.00
400-3001-536-5100	OFFICE SUPPLIES	1,100.00	1,099.97	1,500.00	939.21	1,500.00
Budget Detail						
Budget Code	Description			Units	Price	Amount
DEPT	FACILITIES DIVISION			0.00	0.00	300.00
DEPT	PW ADMINISTRATION			0.00	0.00	800.00
DEPT	STREETS DIVISION			0.00	0.00	400.00
400-3001-536-5201	OPERATING SUPPLIES	90.00	61.75	200.00	282.80	200.00
Budget Detail						
Budget Code	Description			Units	Price	Amount
DEPT	SAFETY VESTS, RAIN GEAR, BOOTS, ETC.			0.00	0.00	200.00
400-3001-536-5250	FUEL & OIL SUPPLIES	4,710.00	4,709.56	4,400.00	3,118.05	4,000.00
400-3001-536-5264	MACH/EQUIP CAPITAL-LIKE	8,689.00	8,688.96	0.00	0.00	0.00
400-3001-536-5400	BOOKS/PUBL/SUBSCR/MEMBE...	450.00	295.00	450.00	88.75	450.00
Budget Detail						
Budget Code	Description			Units	Price	Amount
DEPT	AMERICAN SOCIETY OF CIVIL ENGINEERS			0.00	0.00	350.00
DEPT	PE LICENSE RENEWAL			0.00	0.00	100.00
400-3001-536-5501	TRAINING & EDUCATION COST	0.00	0.00	200.00	430.00	125.00

Attachment: Holly Hill Budget FY23_24 SECOND HEARING (2023-R-52 : Final Budget Fiscal Year 2023

Budget Worksheet

For Fiscal: 2023-2024 Period Ending: 09/30/2024

		2021-2022 Total Budget	2021-2022 Total Activity	2022-2023 Total Budget	2022-2023 Total Activity	Defined Budgets 2023-2024 DEPT
Budget Detail Budget Code	Description			Units	Price	Amount
DEPT	PROFESSIONAL ENGINEERING CONTINUING EDUCATION			0.00	0.00	125.00
Division: 3001 - WATER & SEWER ADMIN Total:		391,651.00	252,333.86	248,309.00	253,289.38	390,001.00
Division: 3010 - WATER UTILITY						
400-3010-533-1200	REGULAR SALARIES & WAGE	470,496.00	432,498.26	526,000.00	501,155.89	586,536.00
Budget Detail Budget Code	Description			Units	Price	Amount
DEPT	CHIEF WATER PLANT OPERATOR			1.00	0.00	0.00
DEPT	DROP			1.00	836.00	836.00
DEPT	PW PROJECT MANAGER (.35)			1.00	0.00	0.00
DEPT	UTILITIES MAINTENANCE WORKER II			1.00	0.00	0.00
DEPT	UTILITIES MAINTENANCE WORKER II			1.00	0.00	0.00
DEPT	UTILITIES MAINTENANCE WORKER II			0.50	0.00	0.00
DEPT	UTILITIES MAINTENANCE WORKER III			0.50	0.00	0.00
DEPT	WATER DISTRIBUTION SYSTEM OPERATOR TRAINEE			1.00	0.00	0.00
DEPT	WATER DISTRIBUTION SYSTEM OPERATOR TRAINEE			1.00	0.00	0.00
DEPT	WATER PLANT OPERATOR C			1.00	0.00	0.00
DEPT	WATER PLANT OPERATOR C			1.00	0.00	0.00
DEPT	WATER PLANT OPERATOR I C			1.00	0.00	0.00
DEPT	WATER PLANT OPERATOR II B			1.00	0.00	0.00
DEPT	WATER PLANT OPERATOR III A			1.00	0.00	0.00
DEPT	WATER REGULAR SALARIES & WAGES			0.00	0.00	585,700.00
400-3010-533-1300	OTHER SALARIES & WAGES	19,800.00	12,626.90	16,000.00	20,209.92	22,558.00
400-3010-533-1400	OVERTIME	33,394.00	33,393.66	21,000.00	32,998.78	22,484.00
400-3010-533-1510	INCENTIVE PAY	693.00	692.88	600.00	635.63	1,230.00
Budget Detail Budget Code	Description			Units	Price	Amount
DEPT	AUTO			1.00	420.00	420.00
DEPT	CELL ALLOW - 4 STAFF			0.00	0.00	810.00
400-3010-533-1520	UNIFORM ALLOWANCE	100.00	30.00	100.00	30.00	70.00
400-3010-533-1530	BOOT ALLOWANCE	1,400.00	1,338.00	1,500.00	1,338.00	1,362.00

Attachment: Holly Hill Budget FY23_24 SECOND HEARING (2023-R-52 : Final Budget Fiscal Year 2023

Budget Worksheet

For Fiscal: 2023-2024 Period Ending: 09/30/2024

Defined Budgets

		2021-2022 Total Budget	2021-2022 Total Activity	2022-2023 Total Budget	2022-2023 Total Activity	2023-2024 DEPT
Budget Detail						
Budget Code	Description			Units	Price	Amount
DEPT	BOOT ALLOWANCE - 3 STAFF			1.00	1,362.00	1,362.00
400-3010-533-2100	FICA/MEDICARE TAXES	40,300.00	36,280.34	42,000.00	42,047.92	48,600.00
400-3010-533-2200	RETIREMENT CONTRIBUTION	56,797.00	57,060.58	70,310.00	72,058.42	85,170.00
400-3010-533-2300	LIFE & HEALTH INSURANCE	104,800.00	80,512.67	118,000.00	84,770.39	109,590.00
Budget Detail						
Budget Code	Description			Units	Price	Amount
DEPT	HEALTH INSURANCE			1.00	107,380.00	107,380.00
DEPT	LIFE INSURANCE			0.00	0.00	2,210.00
400-3010-533-2400	WORKERS COMP INSURANCE	8,800.00	7,512.78	9,500.00	7,720.88	10,690.00
400-3010-533-3101	PROFESSIONAL SERVICES	36,309.00	27,277.89	53,991.00	30,853.14	48,750.00
Budget Detail						
Budget Code	Description			Units	Price	Amount
DEPT	ANNUAL HOIST INSPECTION & CERTIFICATION @ 50%			0.00	0.00	1,000.00
DEPT	CERTIFIED THERMOMETER CALIBRATIONS @ 50%			0.00	0.00	450.00
DEPT	DOH LAB CERTIFICATION FEE @ 50%			0.00	0.00	800.00
DEPT	HACH REGULATORY QUARTERLY CALIBRATIONS @ 50%			0.00	0.00	6,000.00
DEPT	LAB ANALYSES AND MONITORING			0.00	0.00	19,300.00
DEPT	LAB PROFICIENCY TESTING @ 50%			0.00	0.00	2,600.00
DEPT	MISCELLANEOUS ENGINEERING SERVICES			0.00	0.00	2,000.00
DEPT	OPERATIONS LICENSING & CERTIFICATIONS			0.00	0.00	12,900.00
DEPT	RISK MANAGEMENT COMPLIANCE @ 50%			0.00	0.00	3,600.00
DEPT	RISK MANAGEMENT PLAN REGISTRATION @ 50%			0.00	0.00	100.00
400-3010-533-3150	LEGAL.OFFICIAL ADVERTISNG	3,000.00	1,412.80	2,000.00	1,001.32	2,000.00
Budget Detail						
Budget Code	Description			Units	Price	Amount
DEPT	NEWSPAPER ADS, ETC.			0.00	0.00	2,000.00
400-3010-533-3400	OTHER SERVICES	91,330.00	63,096.04	110,310.00	71,728.42	114,800.00
Budget Detail						
Budget Code	Description			Units	Price	Amount
DEPT	BEACON FIXED NETWORK 850 MO X 12			12.00	850.00	10,200.00

Attachment: Holly Hill Budget FY23_24 SECOND HEARING (2023-R-52 : Final Budget Fiscal Year 2023

Budget Worksheet

For Fiscal: 2023-2024 Period Ending: 09/30/2024

Defined Budgets

		2021-2022 Total Budget	2021-2022 Total Activity	2022-2023 Total Budget	2022-2023 Total Activity		2023-2024 DEPT
DEPT	COLLECTION FEES			0.00	0.00	1,100.00	
DEPT	ORION CELLULAR LTE METER			0.00	0.00	7,200.00	
DEPT	TRANSPONDER 590 MO X 12 ORION GATEWAY BACKHAUL CHARGES 300 PER QTR			0.00	0.00	1,500.00	
DEPT	READ CENTER ANALYTICS SOFTWARE			0.00	0.00	2,800.00	
DEPT	SLUDGE HAULING AND LAP APP @ 50%			0.00	0.00	92,000.00	
400-3010-533-4001	TRAVEL & PER DIEM	300.00	0.00	300.00	0.00		100.00
400-3010-533-4200	POSTAGE, FRT, EXPRESS	200.00	0.53	100.00	181.12		100.00
400-3010-533-4301	UTILITY SERVICES	181,808.00	181,807.94	200,000.00	174,437.64		200,000.00
Budget Detail							
Budget Code	Description			Units	Price	Amount	
DEPT	FPL EST 15% INCREASE DUE TO FUEL COSTS			0.00	0.00	197,348.00	
DEPT	TECO AVERAGE $75MO WITH 15% INCREASE			0.00	0.00	1,320.00	
DEPT	WATER AVERAGE WITH 5.5% INCREASE			0.00	0.00	1,332.00	
400-3010-533-4400	RENTALS & LEASES	4,850.00	2,734.86	2,300.00	1,541.67		2,500.00
Budget Detail							
Budget Code	Description			Units	Price	Amount	
DEPT	AMMONIA TANK LEASE			0.00	0.00	1,200.00	
DEPT	MISC EQUIPMENT RENTALS			0.00	0.00	600.00	
DEPT	PW COPIER LEASE $2800 X 25%			0.00	0.00	700.00	
400-3010-533-4500	INSURANCE/NON-EMPLOYEE	20,670.00	19,032.04	23,290.00	24,137.10		36,718.00
Budget Detail							
Budget Code	Description			Units	Price	Amount	
DEPT	PROPERTY & LIABILITY			0.00	0.00	35,718.00	
DEPT	STORAGE TANK AND POLLUTION			0.00	0.00	1,000.00	
400-3010-533-4601	REPAIRS & MAINTENANCE	138,432.00	138,431.65	153,300.00	124,656.74		124,200.00
Budget Detail							
Budget Code	Description			Units	Price	Amount	
DEPT	A/C MAINTENANCE @ WATER PLANT			0.00	0.00	1,500.00	
DEPT	AMMONIA STORAGE TANK REGISTRATION			0.00	0.00	100.00	
DEPT	BACKFLOW PREVENTER MAINTENANCE			0.00	0.00	3,000.00	
DEPT	DIST SAMPLE STATIONS			0.00	0.00	3,500.00	
DEPT	DISTRIBUTION SYSTEM MAINTENANCE			0.00	0.00	35,000.00	
DEPT	DISTRIBUTION VALVE MAINTENANCE			0.00	0.00	5,000.00	
DEPT	FEC BLANKET UTILITY CROSSING			0.00	0.00	3,900.00	

Attachment: Holly Hill Budget FY23_24 SECOND HEARING (2023-R-52 : Final Budget Fiscal Year 2023

Budget Worksheet

For Fiscal: 2023-2024 Period Ending: 09/30/2024

Defined Budgets

		2021-2022 Total Budget	2021-2022 Total Activity	2022-2023 Total Budget	2022-2023 Total Activity		2023-2024 DEPT
DEPT	LIME SOFTENING CLEANING			0.00	0.00	20,000.00	
DEPT	TRIMBLE RANGER CE SERVICE RENEWAL			0.00	0.00	600.00	
DEPT	WATER METER TESTER CALIBRATION			0.00	0.00	200.00	
DEPT	WATER PLANT & WELL REPAIRS (ELECTRIC, PUMPS, ETC.)			0.00	0.00	45,000.00	
DEPT	WATER TREATMENT PLANT & CONTROLS			0.00	0.00	6,400.00	
400-3010-533-4611	MAINTENANCE CONTRACTS	36,651.00	15,812.15	39,686.00	31,230.85		39,800.00
Budget Detail							
Budget Code	Description			Units	Price	Amount	
DEPT	ELEVATED STORAGE TANK MAINTENANCE CONTRACT			0.00	0.00	13,600.00	
DEPT	MISC MAINTENANCE CONTRACTS			0.00	0.00	3,000.00	
DEPT	PW COPIER/MAINTENANCE FEES			0.00	0.00	500.00	
DEPT	RADIO SYSTEM MAINTENANCE			0.00	0.00	1,700.00	
DEPT	SCADA SYSTEM ANNUAL MAINTENANCE FEE			0.00	0.00	21,000.00	
400-3010-533-4650	FLEET CHARGES	15,000.00	4,976.15	15,000.00	9,227.16		15,000.00
Budget Detail							
Budget Code	Description			Units	Price	Amount	
DEPT	MISC WATER VEHICLE/GENERATOR MAINTENANCE			0.00	0.00	15,000.00	
400-3010-533-4660	SMALL EQ REPAIR & MAINT	1,500.00	444.02	1,500.00	64.24		1,500.00
400-3010-533-4670	GENERATOR REPAIR & MAIN	2,000.00	279.17	2,000.00	302.57		2,000.00
400-3010-533-4700	PRINTING & BINDING	1,000.00	624.74	1,150.00	1,197.04		700.00
Budget Detail							
Budget Code	Description			Units	Price	Amount	
DEPT	ANNUAL CCR REPORT			0.00	0.00	200.00	
DEPT	CUSTOMER NOTICE DOOR HANGERS			0.00	0.00	400.00	
DEPT	FREE CHLORINE BURN NOTICE			0.00	0.00	100.00	
400-3010-533-4930	ADMIN SERV FEE ALLOCATION	488,188.00	488,188.00	578,118.00	578,118.00		592,703.00
Budget Detail							
Budget Code	Description			Units	Price	Amount	
DEPT	DIRECT COST - FACILITIES			1.00	93,548.00	93,548.00	
DEPT	DIRECT COST - FLEET			1.00	39,693.00	39,693.00	
DEPT	DIRECT COST ALLOCATION - ADMINISTRATION			1.00	459,462.00	459,462.00	

Attachment: Holly Hill Budget FY23_24 SECOND HEARING (2023-R-52 : Final Budget Fiscal Year 2023

Budget Worksheet

For Fiscal: 2023-2024 Period Ending: 09/30/2024

Defined Budgets

		2021-2022 Total Budget	2021-2022 Total Activity	2022-2023 Total Budget	2022-2023 Total Activity	2023-2024 DEPT
400-3010-533-4959	BAD DEBT EXPENSE	25,000.00	11,306.91	25,000.00	0.00	25,000.00
400-3010-533-5100	OFFICE SUPPLIES	1,255.00	1,254.22	400.00	780.57	600.00
400-3010-533-5201	OPERATING SUPPLIES	225,890.00	207,244.50	444,737.00	317,855.63	479,550.00

Budget Detail

Budget Code	Description	Units	Price	Amount
DEPT	AQUA GOLD	0.00	0.00	45,000.00
DEPT	BUILDING MATERIALS FOR REPAIRS	0.00	0.00	7,500.00
DEPT	CELLULAR RETROFITS TO EXISTING BADGER METERS	0.00	0.00	20,000.00
DEPT	DISTILLED WATER @ 50%	0.00	0.00	750.00
DEPT	FLUORIDE	0.00	0.00	5,500.00
DEPT	HIGH CALCIUM QUICK LIME	0.00	0.00	154,000.00
DEPT	LAB SUPPLIES	0.00	0.00	12,000.00
DEPT	LIQUID ANHYDROUS AMMONIA	0.00	0.00	9,000.00
DEPT	LIQUID CARBON DIOXIDE	0.00	0.00	43,000.00
DEPT	LIQUID CHLORINE @ 50%	0.00	0.00	83,000.00
DEPT	POLYMER	0.00	0.00	2,800.00
DEPT	POLYMER (S.H.B. PRESSES) @ 50%	0.00	0.00	26,000.00
DEPT	SAFETY GEAR, RAIN GEAR, ETC	0.00	0.00	2,500.00
DEPT	WATER DISTRIBUTION [PARTS, FITTINGS, VALVES	0.00	0.00	40,000.00
DEPT	WATER METER BOXES, TRANSPONDERS, PARTS	0.00	0.00	25,000.00
DEPT	WTP INSTITUTIONAL SUPPLIES (CLEANING)	0.00	0.00	3,500.00

400-3010-533-5204	SMALL TOOLS & EQUIPMENT	1,500.00	1,443.83	1,000.00	1,110.27	500.00
400-3010-533-5219	UNIFORM EXPENSE	3,000.00	2,108.07	3,000.00	3,216.16	0.00
400-3010-533-5250	FUEL & OIL SUPPLIES	31,610.00	21,994.85	39,623.00	1,956.35	30,000.00

Budget Detail

Budget Code	Description	Units	Price	Amount
DEPT	ALL WATER VEHICLES (UB, PLANT, GENERATORS)	0.00	0.00	30,000.00

400-3010-533-5264	MACH/EQUIP CAPITAL-LIKE	17,556.00	16,635.53	16,956.00	0.00	0.00
400-3010-533-5400	BOOKS/PUBL/SUBSCR/MEMBE...	2,300.00	1,230.41	2,300.00	2,437.69	1,600.00

Budget Detail

Budget Code	Description	Units	Price	Amount
DEPT	FLORIDA RURAL WATER ASSOCIATION MEMBERSHIP	0.00	0.00	600.00
DEPT	FW&PCOA MEMBERSHIP (10 @ $30)	0.00	0.00	300.00

Attachment: Holly Hill Budget FY23_24 SECOND HEARING (2023-R-52 : Final Budget Fiscal Year 2023

Budget Worksheet

For Fiscal: 2023-2024 Period Ending: 09/30/2024

Defined Budgets

		2021-2022 Total Budget	2021-2022 Total Activity	2022-2023 Total Budget	2022-2023 Total Activity		2023-2024 DEPT
DEPT	SUNSHINE STATE ONE CALL $2,054.28 @ 33%			0.00	0.00	700.00	
400-3010-533-5501	TRAINING & EDUCATION COST	1,900.00	570.00	3,700.00	990.00		3,400.00
Budget Detail							
Budget Code	Description			Units	Price	Amount	
DEPT	DIST CERTIFICATION @ CEU PROGRAMS (3 OPERATORS)			0.00	0.00	500.00	
DEPT	MOT CERTIFICATIONS 3 @ $400			0.00	0.00	1,200.00	
DEPT	OTHER MISC TRAINING COURSES/SEMINARS			0.00	0.00	500.00	
DEPT	PLANT OPERATOR CERT CEU PROGRAMS			0.00	0.00	1,200.00	
	Division: 3010 - WATER UTILITY Total:	2,067,829.00	1,869,852.37	2,524,771.00	2,139,989.51		2,609,811.00
Division: 3020 - SEWER SERVICES							
400-3020-535-1200	REGULAR SALARIES & WAGE	510,822.00	510,821.66	610,000.00	582,696.69		617,914.00
Budget Detail							
Budget Code	Description			Units	Price	Amount	
DEPT	CHIEF WASTEWATER PLANT OPERATOR			1.00	0.00		
DEPT	PW PROJECT MANAGER			1.00	0.00		
DEPT	UTILITIES MAINT WORKER II			1.00	0.00		
DEPT	UTILITIES MAINT WORKER II			0.50	0.00		
DEPT	UTILITIES MAINT WORKER II			1.00	0.00		
DEPT	UTILITIES MAINT WORKER III			1.00	0.00		
DEPT	UTILITIES MAINT WORKER III			1.00	0.00		
DEPT	UTILITIES MAINT WORKER III			0.50	0.00		
DEPT	WASTEWATER PLANT OPERATOR C			1.00	0.00		
DEPT	WASTEWATER PLANT OPERATOR I C			1.00	0.00		
DEPT	WASTEWATER PLANT OPERATOR I C			1.00	0.00		
DEPT	WASTEWATER PLANT OPERATOR I C			1.00	0.00		
DEPT	WASTEWATER PLANT OPERATOR I C			2.00	0.00		
DEPT	WASTEWATER REGULAR SALARIES & WAGES TOTAL			0.00	0.00	617,914.00	
400-3020-535-1300	OTHER SALARIES & WAGES	32,100.00	30,919.67	20,000.00	17,944.75		19,718.00
400-3020-535-1400	OVERTIME	70,464.00	70,463.72	49,100.00	51,303.00		61,460.00
400-3020-535-1510	INCENTIVE PAY	700.00	692.88	700.00	598.13		1,230.00
Budget Detail							
Budget Code	Description			Units	Price	Amount	
DEPT	AUTO			1.00	420.00	420.00	

Attachment: Holly Hill Budget FY23_24 SECOND HEARING (2023-R-52 : Final Budget Fiscal Year 2023

Budget Worksheet

For Fiscal: 2023-2024 Period Ending: 09/30/2024

Defined Budgets

		2021-2022 Total Budget	2021-2022 Total Activity	2022-2023 Total Budget	2022-2023 Total Activity		2023-2024 DEPT
DEPT	CELL			1.00	810.00	810.00	
400-3020-535-1520	UNIFORM ALLOWANCE	100.00	30.00	100.00	30.00		70.00
Budget Detail							
Budget Code	Description			Units	Price	Amount	
DEPT	CLOTHING ALLOWANCE - PW Project Mgr			0.00	0.00	70.00	
400-3020-535-1530	BOOT ALLOWANCE	1,600.00	1,578.00	1,600.00	1,578.00		1,482.00
Budget Detail							
Budget Code	Description			Units	Price	Amount	
DEPT	BOOT - PW PROJECT MGR			0.00	0.00	42.00	
DEPT	BOOT - SEWER DEPT			12.00	120.00	1,440.00	
400-3020-535-2100	FICA/MEDICARE TAXES	46,600.00	43,737.25	51,000.00	48,319.91		53,780.00
400-3020-535-2200	RETIREMENT CONTRIBUTION	74,437.00	74,701.41	82,000.00	82,960.77		94,950.00
400-3020-535-2300	LIFE & HEALTH INSURANCE	106,077.00	97,922.99	135,000.00	106,317.16		119,210.00
Budget Detail							
Budget Code	Description			Units	Price	Amount	
DEPT	HEALTH INSURANCE			1.00	116,840.00	116,840.00	
DEPT	LIFE INSURANCE			0.00	0.00	2,370.00	
400-3020-535-2400	WORKERS COMP INSURANCE	8,300.00	7,254.55	9,500.00	9,887.45		10,690.00
400-3020-535-3101	PROFESSIONAL SERVICES	83,982.00	46,830.43	146,269.00	54,318.87		75,750.00
Budget Detail							
Budget Code	Description			Units	Price	Amount	
DEPT	ANNUAL CONTINUOUS METER CALIBRATIONS - CFC			0.00	0.00	2,100.00	
DEPT	ANNUAL HOIST INSPECTIONS&CERTIFICATIONS @50%			0.00	0.00	1,000.00	
DEPT	ANNUAL METTLER BALANCE			0.00	0.00	700.00	
DEPT	BIO-ASSAY			0.00	0.00	14,000.00	
DEPT	CERT THERMOMETER CALIBRATIONS @ 50%			0.00	0.00	450.00	
DEPT	DOH LAB CERTIFICATION FEE @ 50%			0.00	0.00	800.00	
DEPT	ENVIRONMENTAL IMPACT TESTING FEES			0.00	0.00	4,000.00	
DEPT	EXPANDED/MISC TESTING REQUIREMENT			0.00	0.00	6,000.00	
DEPT	HACH REGULATORY QUARTERLY CALIBRATIONS @ 50%			0.00	0.00	6,000.00	
DEPT	INDUSTRIAL PRETREATMENT			0.00	0.00	2,500.00	
DEPT	LAB PROFICIENCY TESTING @ 50%			0.00	0.00	2,600.00	

Attachment: Holly Hill Budget FY23_24 SECOND HEARING (2023-R-52 : Final Budget Fiscal Year 2023

Budget Worksheet

For Fiscal: 2023-2024 Period Ending: 09/30/2024

		2021-2022 Total Budget	2021-2022 Total Activity	2022-2023 Total Budget	2022-2023 Total Activity		Defined Budgets 2023-2024 DEPT
DEPT	PRIORITY POLLUTANT			0.00	0.00	6,600.00	
DEPT	RECLAIMED/EFFLUENT WATER ANALYSIS			0.00	0.00	5,000.00	
DEPT	RECOMMEND SEWER PLAN REVIEW - M&H			0.00	0.00	7,500.00	
DEPT	RISK MANAGEMENT PLAN COMPLIANCE @ 50%			0.00	0.00	3,600.00	
DEPT	RISK MANAGEMENT PLAN REGISTRATION @ 50%			0.00	0.00	100.00	
DEPT	SLUDGE ANALYSIS			0.00	0.00	6,000.00	
DEPT	WEEKLY ANALYSIS AND MONITORING			0.00	0.00	5,000.00	
DEPT	WELL MONITORING			0.00	0.00	1,800.00	
400-3020-535-3150	LEGAL/OFFICIAL ADVERTISNG	900.00	787.44	2,500.00	0.00		1,500.00
400-3020-535-3400	OTHER SERVICES	83,200.00	47,913.87	112,500.00	48,573.04		92,685.00
Budget Detail							
Budget Code	Description			Units	Price	Amount	
DEPT	COLLECTIONS FEES (EST) $3,300 @ 33%			0.00	0.00	1,100.00	
DEPT	SLUDGE HAULING AND LAND APP @ 50%			0.00	0.00	91,585.00	
400-3020-535-4001	TRAVEL & PER DIEM	330.00	0.00	500.00	0.00		500.00
400-3020-535-4200	POSTAGE, FRT, EXPRESS	1,703.00	1,702.75	1,500.00	300.30		1,500.00
400-3020-535-4301	UTILITY SERVICES	156,719.00	156,718.76	169,622.00	153,467.88		172,022.00
Budget Detail							
Budget Code	Description			Units	Price	Amount	
DEPT	FPL			0.00	0.00	168,000.00	
DEPT	GAS			0.00	0.00	2,750.00	
DEPT	WATER			0.00	0.00	1,272.00	
400-3020-535-4400	RENTALS & LEASES	5,750.00	1,469.39	3,000.00	341.60		3,000.00
Budget Detail							
Budget Code	Description			Units	Price	Amount	
DEPT	MISC EQUIPMENT RENTALS			0.00	0.00	2,300.00	
DEPT	PW COPIER LEASE $2800 X 25%			0.00	0.00	700.00	
400-3020-535-4500	INSURANCE/NON-EMPLOYEE	21,625.00	19,885.88	24,863.00	25,707.46		40,220.00
Budget Detail							
Budget Code	Description			Units	Price	Amount	
DEPT	PROPERTY & LIABILITY			0.00	0.00	39,220.00	
DEPT	STORAGE TANK AND POLLUTION			0.00	0.00	1,000.00	
400-3020-535-4601	REPAIRS & MAINTENANCE	397,696.00	218,891.38	437,291.00	296,832.19		408,100.00

Attachment: Holly Hill Budget FY23_24 SECOND HEARING (2023-R-52 : Final Budget Fiscal Year 2023

Budget Worksheet

For Fiscal: 2023-2024 Period Ending: 09/30/2024

Defined Budgets

		2021-2022 Total Budget	2021-2022 Total Activity	2022-2023 Total Budget	2022-2023 Total Activity	2023-2024 DEPT
Budget Detail						
Budget Code	Description			Units	Price	Amount
DEPT	ELECTRICAL REPAIRS			0.00	0.00	21,200.00
DEPT	EMERGENCY SEWER AND FORCE MAIN REPAIRS			0.00	0.00	100,000.00
DEPT	HACH SVCS (INFLUENT, EFFLUENT, BIOASSAYS)			0.00	0.00	3,000.00
DEPT	HIGH MAST LIGHTING - REPAIR/MAINTENANCE			0.00	0.00	15,000.00
DEPT	INSTRUMENTATION MAINTENANCE			0.00	0.00	6,000.00
DEPT	LIFT STATION GENERAL MAINTENANCE			0.00	0.00	46,000.00
DEPT	OTHER MISC. PUMP REPAIRS			0.00	0.00	37,000.00
DEPT	OTHER MISC. REPAIRS			0.00	0.00	46,000.00
DEPT	REPL PARTS FOR CHEMICAL FEED PUMP			0.00	0.00	6,000.00
DEPT	REPL PARTS FOR INFLUENT/EFFLUENT PUMPS			0.00	0.00	6,000.00
DEPT	REPL PARTS FOR POLYMER FEED EQUIPMENT			0.00	0.00	3,000.00
DEPT	REPL PARTS FOR VULCAN STEP SCREENS			0.00	0.00	10,000.00
DEPT	REPLACEMENT BEARINGS FOR BTU#1 AND #2			0.00	0.00	6,500.00
DEPT	REPLACEMENT PARTS FOR DAF UNIT			0.00	0.00	3,500.00
DEPT	SERVICE - DISC FILTERS: PUMPS AND HARDWARE			0.00	0.00	5,500.00
DEPT	SERVICE FOR BTU MOTORS			0.00	0.00	5,000.00
DEPT	SERVICE FOR DISC FLOW SLUDGE PUMP			0.00	0.00	9,000.00
DEPT	SERVICE FOR RECLAIM PUMPS			0.00	0.00	20,000.00
DEPT	SEWER, MANHOLES, CLEANOUTS, ETC.			0.00	0.00	46,000.00
DEPT	SURGE PROTECTORS FOR MCC #1, #2, #3			0.00	0.00	7,000.00
DEPT	WTR TREATMENT & CONTROLS @ 50%			0.00	0.00	6,400.00
400-3020-535-4611	MAINTENANCE CONTRACTS	77,600.00	1,793.36	75,900.00	52,070.97	76,900.00
Budget Detail						
Budget Code	Description			Units	Price	Amount
DEPT	COPIER AND PRINTER MAINTENANCE CONTRACT			0.00	0.00	900.00
DEPT	SCADA SYSTEM ANNUAL MAINTENANCE FEE			0.00	0.00	76,000.00
400-3020-535-4650	FLEET CHARGES	15,000.00	4,460.52	21,990.00	10,981.13	15,000.00
400-3020-535-4660	SMALL EQ REPAIR & MAINT	700.00	633.77	0.00	512.20	0.00

Attachment: Holly Hill Budget FY23_24 SECOND HEARING (2023-R-52 : Final Budget Fiscal Year 2023

Budget Worksheet

For Fiscal: 2023-2024 Period Ending: 09/30/2024

Defined Budgets

		2021-2022 Total Budget	2021-2022 Total Activity	2022-2023 Total Budget	2022-2023 Total Activity	2023-2024 DEPT
400-3020-535-4670	GENERATOR REPAIR & MAIN	7,800.00	7,603.29	15,000.00	9,705.60	14,000.00
400-3020-535-4700	PRINTING & BINDING	300.00	50.00	400.00	322.78	500.00
400-3020-535-4930	ADMIN SERV FEE ALLOCATION	490,527.00	490,527.00	610,325.00	610,325.00	602,933.00

Budget Detail

Budget Code	Description	Units	Price	Amount
DEPT	DIRECT COST - FACILITIES	1.00	93,549.00	93,549.00
DEPT	DIRECT COST - FLEET	1.00	46,308.00	46,308.00
DEPT	DIRECT COST ALLOCATION - ADMINISTRATION	1.00	463,076.00	463,076.00

400-3020-535-4959	BAD DEBT EXPENSE	25,000.00	11,161.97	25,000.00	0.00	25,000.00
400-3020-535-5100	OFFICE SUPPLIES	1,500.00	1,376.95	400.00	965.67	450.00
400-3020-535-5201	OPERATING SUPPLIES	309,505.00	223,531.18	441,129.00	255,586.97	495,920.00

Budget Detail

Budget Code	Description	Units	Price	Amount
DEPT	BUILDING MATERIALS (REPAIR, PAINT,	0.00	0.00	5,400.00
DEPT	DISTILLED WATER $1,300 $ 50%	0.00	0.00	750.00
DEPT	GRANULAR CHLORINE	0.00	0.00	3,000.00
DEPT	HARDY DIAGNOSTIC WATER	0.00	0.00	3,000.00
DEPT	LIQUID ALUMINUM SULFATE	0.00	0.00	64,500.00
DEPT	LIQUID CHLORINE @ 50%	0.00	0.00	83,000.00
DEPT	MICROC GLYCERIN	0.00	0.00	122,350.00
DEPT	MISC LABORATORY SUPPLIES	0.00	0.00	16,000.00
DEPT	MISC WWTP PROCESS CONTROL SUPPLIES	0.00	0.00	16,000.00
DEPT	POLYMER (D.A.F. UNIT)	0.00	0.00	45,580.00
DEPT	POLYMER (S.H.B. PRESSES) @ 50%	0.00	0.00	51,940.00
DEPT	SULFUR DIOXIDE	0.00	0.00	44,000.00
DEPT	SWR COLLECTIONS, PARTS, SAFETY GEAR, BOOTS	0.00	0.00	35,000.00
DEPT	WWTF SUPPLIES (BULBS, SOAP, MOPS, ETC.)	0.00	0.00	5,400.00

400-3020-535-5202	COMPUTERS	0.00	0.00	1,000.00	0.00	1,500.00

Budget Detail

Budget Code	Description	Units	Price	Amount
DEPT	SCADA EQUIPMENT NOT COVERED BY DFS	0.00	0.00	1,500.00

400-3020-535-5204	SMALL TOOLS & EQUIPMENT	10,000.00	6,887.18	4,000.00	4,983.62	5,500.00

Attachment: Holly Hill Budget FY23_24 SECOND HEARING (2023-R-52 : Final Budget Fiscal Year 2023

Budget Worksheet

For Fiscal: 2023-2024 Period Ending: 09/30/2024

Defined Budgets

		2021-2022 Total Budget	2021-2022 Total Activity	2022-2023 Total Budget	2022-2023 Total Activity	2023-2024 DEPT
Budget Detail						
Budget Code	Description			Units	Price	Amount
DEPT	REPLACEMENT TOOLS: HAND, POWER, PNUEMATIC			0.00	0.00	5,500.00
400-3020-535-5210	SIGNS & MATERIALS	0.00	0.00	0.00	0.00	500.00
Budget Detail						
Budget Code	Description			Units	Price	Amount
DEPT	RECLAIMED WATER SIGNS. ETC			0.00	0.00	500.00
400-3020-535-5219	UNIFORM EXPENSE	2,600.00	2,419.58	2,600.00	3,258.55	0.00
400-3020-535-5250	FUEL & OIL SUPPLIES	56,795.00	44,188.29	36,122.00	24,593.79	39,500.00
Budget Detail						
Budget Code	Description			Units	Price	Amount
DEPT	ALL WWTF VEHICLES (LIFT STATIONS, GENERATORS)			0.00	0.00	39,500.00
400-3020-535-5264	MACH/EQUIP CAPITAL-LIKE	20,084.00	15,405.83	0.00	0.00	0.00
400-3020-535-5400	BOOKS/PUBL/SUBSCR/MEMBE...	1,500.00	961.40	1,800.00	1,332.79	1,400.00
Budget Detail						
Budget Code	Description			Units	Price	Amount
DEPT	DEP OPERATOR CERTIFICATES			0.00	0.00	400.00
DEPT	FW & PCOA MEMBERSHIP 11 @ $36			0.00	0.00	300.00
DEPT	SUNSHINE STATE ONE CALL $2,054 @ 33%			0.00	0.00	700.00
400-3020-535-5501	TRAINING & EDUCATION COST	4,000.00	759.00	4,000.00	522.00	2,100.00
Budget Detail						
Budget Code	Description			Units	Price	Amount
DEPT	FWRC CONFERENCE			0.00	0.00	600.00
DEPT	MISC TRAINING: SAFETY, COLLECTIONS, ETC.			0.00	0.00	1,000.00
DEPT	OPERATOR CERTIFICATION PROGRAMS			0.00	0.00	500.00
	Division: 3020 - SEWER SERVICES Total:	2,626,016.00	2,144,081.35	3,096,711.00	2,456,338.27	3,056,984.00
Division: 3060 - WATER & SEWER ADMIN						
400-3060-536-5920	DEPRECIATION EXPENSE	0.00	1,598,825.88	0.00	0.00	0.00
400-3060-536-7320	AMORTIZATION EXPENS	0.00	72,091.83	0.00	0.00	0.00
	Division: 3060 - WATER & SEWER ADMIN Total:	0.00	1,670,917.71	0.00	0.00	0.00

Attachment: Holly Hill Budget FY23_24 SECOND HEARING (2023-R-52 : Final Budget Fiscal Year 2023

Budget Worksheet

For Fiscal: 2023-2024 Period Ending: 09/30/2024

Defined Budgets

		2021-2022 Total Budget	2021-2022 Total Activity	2022-2023 Total Budget	2022-2023 Total Activity	2023-2024 DEPT
Division: 8110 - NON-DEPARTMENTAL						
400-8110-517-7140	PRINCIPAL PYMT VACUUM TRK	53,715.00	0.00	55,554.00	50,852.36	57,444.00
400-8110-517-7171	W&S SERIES 2012 BONDS	910,000.00	0.00	920,000.00	920,000.00	0.00
400-8110-517-7174	W&S SERIES 2005	90,000.00	0.00	95,000.00	95,000.00	95,000.00
400-8110-517-7175	W&S SERIES SRF 2005	36,497.00	0.00	37,275.00	37,274.75	38,070.00
400-8110-517-7176	W&S SERIES SRF 2007	281,573.00	0.00	287,716.00	143,081.52	293,993.00
400-8110-517-7177	2011 W&S R&R BOND	235,000.00	0.00	245,000.00	245,000.00	250,000.00
400-8110-517-7178	SERIES 2013 WTR MTR BOND	160,000.00	0.00	165,000.00	165,000.00	170,000.00
400-8110-517-7240	INTEREST VACUUM TRK	7,115.00	7,114.23	5,276.00	4,906.97	3,386.00
400-8110-517-7271	W&S SERIES 2012 BONDS	32,588.00	21,803.90	10,902.00	10,901.95	0.00
400-8110-517-7274	W&S SERIES 2005	18,784.00	15,299.32	15,299.00	15,298.57	11,619.00
400-8110-517-7275	W&S SERIES SRF 2005	4,273.00	3,917.71	3,495.00	3,494.51	2,701.00
400-8110-517-7276	W&S SERIES SRF 2007	47,690.00	47,434.61	41,546.00	21,549.18	35,269.00
400-8110-517-7277	2011 W&S R&R BOND	111,123.00	106,181.55	101,031.00	101,030.17	90,623.00
400-8110-517-7278	SERIES 2013 WTR MTR BOND	8,051.00	6,499.00	4,899.00	4,898.51	1,649.00
400-8110-580-1810	COMPENSATED LEAVE	0.00	-620.80	0.00	0.00	0.00
400-8110-580-6300	INFRASTRUCTURE	6,189,048.00	0.00	6,127,352.00	142,885.68	0.00
400-8110-580-6400	MACHINERY & EQUIPMENT	91,798.00	10,992.00	40,000.00	0.00	0.00
400-8110-581-0407	TRANSFER TO WATER & SEWER...	5,372,496.00	5,372,496.00	4,037,600.00	37,600.00	1,302,500.00
Budget Detail						
Budget Code	Description			Units	Price	Amount
DEPT	TRANSFER TO 407 FUND FOR CAPITAL PROJECTS			1.00	1,302,500.00	1,302,500.00
400-8110-581-1001	TRANSFER TO GENERAL FUND	283,535.00	283,535.00	218,922.00	218,922.00	0.00
400-8110-589-9910	CONTINGENCY	282,152.00	0.00	194,915.00	0.00	5,600.00
400-8110-591-9300	INTEREST EXPENSE - LEASES	0.00	22,365.00	0.00	0.00	0.00
Division: 8110 - NON-DEPARTMENTAL Total:		14,215,438.00	5,897,017.52	12,606,782.00	2,217,696.17	2,357,854.00
Fund: 400 - WATER & SEWER FUND Surplus (Deficit):		0.00	-3,744,553.80	0.00	216,320.15	0.00

Attachment: Holly Hill Budget FY23_24 SECOND HEARING (2023-R-52 : Final Budget Fiscal Year 2023

Attachment: Holly Hill Budget FY23_24 SECOND HEARING (2023-R-52 : Final Budget Fiscal Year 2023

HOLLY HILL
FLORIDA

PROPRIETARY R&R (407)
REVENUE & EXPENDITURES

Budget FY 2023 - 2024

Budget Worksheet

For Fiscal: 2023-2024 Period Ending: 09/30/2024

		2021-2022 Total Budget	2021-2022 Total Activity	2022-2023 Total Budget	2022-2023 Total Activity	Defined Budgets 2023-2024 DEPT
Fund: 407 - PROPRIETARY R&R FUND						
Division: 0000 - UNDESIGNATED						
407-0000-331-5010	CDBG GRANT	172,175.00	150,119.00	0.00	0.00	0.00
407-0000-343-3100	WATER UTILITY R&R	0.00	2.72	0.00	0.00	0.00
407-0000-343-3101	INSIDE CITY LIMITS	291,700.00	299,025.31	290,000.00	263,624.86	290,000.00
407-0000-343-5150	SEWER UTILITY R&R	294,350.00	299,581.41	290,000.00	264,113.99	290,000.00
407-0000-361-1000	INTEREST & OTHER EARNINGS	0.00	468.83	0.00	11,926.68	2,500.00
407-0000-361-1500	INVESTMENT EARNINGS	6,335.00	25,531.79	7,400.00	216,099.23	50,574.00
407-0000-361-3010	INCR/DECR FAIR VAL-INVEST	0.00	-16,355.23	0.00	0.00	0.00
407-0000-381-0400	TRANSFER FRM ENTERPRISE	5,372,496.00	5,372,496.00	4,037,600.00	37,600.00	1,302,500.00
407-0000-389-1000	PRIOR YEAR CARRYOVER	1,467,964.00	0.00	2,239,361.00	0.00	977,000.00
	Division: 0000 - UNDESIGNATED Total:	7,605,020.00	6,130,869.83	6,864,361.00	793,364.76	2,912,574.00
Division: 3010 - WATER UTILITY						
407-3010-533-4959	BAD DEBT EXPENSE	2,033.00	2,032.31	0.00	0.00	0.00
	Division: 3010 - WATER UTILITY Total:	2,033.00	2,032.31	0.00	0.00	0.00
Division: 3020 - SEWER SERVICES						
407-3020-535-4959	OTHER CHARGES	2,033.00	2,032.31	0.00	0.00	0.00
	Division: 3020 - SEWER SERVICES Total:	2,033.00	2,032.31	0.00	0.00	0.00
Division: 8110 - NON-DEPARTMENTAL						
407-8110-580-6300	INFRASTRUCTURE	7,500,417.00	350.00	6,525,411.00	1,209,722.26	2,707,574.00

Budget Detail

Budget Code	Description	Units	Price	Amount
DEPT	CLEARMWEEL PUMPS, PIPING AND VALVES	1.00	1,500,000.00	1,500,000.00
DEPT	MIDNIGHT FLOW STUDY	1.00	64,000.00	64,000.00
DEPT	NEW GOLF COURSE FLOW VALVE	1.00	100,000.00	100,000.00
DEPT	NEW HIGH SERVICE PUMP MOTOR	1.00	18,000.00	18,000.00
DEPT	RESURFACE/SEAL WALLS OF MANHOLES	1.00	150,000.00	150,000.00
DEPT	SMOKE TESTING OF SEWER LINES	1.00	62,000.00	62,000.00
DEPT	TANK CLEANINGS	1.00	10,000.00	10,000.00
DEPT	WATER MAIN REPLACEMENTS 3RD ST/CAVANAH/FLORIDA	1.00	763,574.00	763,574.00
DEPT	WELL CHECK VALVE REPLACEMENT	1.00	10,000.00	10,000.00
DEPT	WELL FLOW METERS	1.00	30,000.00	30,000.00

407-8110-580-6400	MACHINERY & EQUIPMENT	0.00	0.00	279,397.00	77,609.14	205,000.00

Attachment: Holly Hill Budget FY23_24 SECOND HEARING (2023-R-52 : Final Budget Fiscal Year 2023

Budget Worksheet

For Fiscal: 2023-2024 Period Ending: 09/30/2024

Defined Budgets

		2021-2022 Total Budget	2021-2022 Total Activity	2022-2023 Total Budget	2022-2023 Total Activity	2023-2024 DEPT
Budget Detail						
Budget Code	Description			Units	Price	Amount
DEPT	FORD F-350 TRUCK UTILITY BOX AND HOIST			1.00	125,000.00	125,000.00
DEPT	LIFT STATION PUMP REPLACEMENTS			1.00	80,000.00	80,000.00
407-8110-581-0400	TRANSFER TO W&S	0.00	398,120.36	0.00	0.00	0.00
407-8110-589-9910	CONTINGENCY	100,537.00	0.00	59,553.00	0.00	0.00
Division: 8110 - NON-DEPARTMENTAL Total:		7,600,954.00	398,470.36	6,864,361.00	1,287,331.40	2,912,574.00
Fund: 407 - PROPRIETARY R&R FUND Surplus (Deficit):		0.00	5,728,334.85	0.00	-493,966.64	0.00

Attachment: Holly Hill Budget FY23_24 SECOND HEARING (2023-R-52 : Final Budget Fiscal Year 2023

Attachment: Holly Hill Budget FY23_24 SECOND HEARING (2023-R-52 : Final Budget Fiscal Year 2023

HOLLY HILL
FLORIDA

STORMWATER (460)
REVENUE & EXPENDITURES

Budget FY 2023 - 2024

Budget Worksheet

For Fiscal: 2023-2024 Period Ending: 09/30/2024

Defined Budgets

		2021-2022 Total Budget	2021-2022 Total Activity	2022-2023 Total Budget	2022-2023 Total Activity	2023-2024 DEPT
Fund: 460 - STORMWATER FUND						
Division: 0000 - UNDESIGNATED						
460-0000-325-2080	NON AD-VAL STRMWTR	1,140,000.00	1,153,185.99	1,167,285.00	1,069,213.22	1,055,293.00
Budget Detail						
Budget Code	Description			Units	Price	Amount
DEPT	NON ADVALOREM ERUS (95%) $96*.95 = 91.20			11,571.20	-91.20	-1,055,293.00
460-0000-325-2085	STORMWATER CHARGES	0.00	0.00	0.00	85,581.64	92,933.00
Budget Detail						
Budget Code	Description			Units	Price	Amount
DEPT	RESID CONDO COMPLEX, GOVT 95% (96.00*.95=91.20)			1,019.00	-91.20	-92,933.00
460-0000-325-2089	DELINQ NON AD-VAL STMWTR	0.00	0.00	0.00	766.93	0.00
460-0000-331-1000	FEDERAL GRANTS	0.00	0.00	-75,000.00	0.00	0.00
460-0000-361-1000	INTEREST & OTHER EARNINGS	120.00	91.69	0.00	2,998.50	0.00
460-0000-361-1500	INVESTMENT EARNINGS	6,035.00	14,127.13	7,000.00	56,014.51	7,087.00
460-0000-361-3010	INCR/DECR FAIR VAL-INVEST	0.00	-8,163.79	0.00	0.00	0.00
460-0000-381-0461	TRN FR STRM CAP PRJT	0.00	103,698.00	0.00	0.00	0.00
460-0000-389-1000	PRIOR YEAR CARRYOVER	1,769,885.00	0.00	35,717.00	0.00	240,600.00
	Division: 0000 - UNDESIGNATED Total:	2,916,040.00	1,262,939.02	1,135,002.00	1,214,574.80	1,395,913.00
Division: 3080 - STORMWATER MANAGEME						
460-3080-538-1200	REGULAR SALARIES & WAGE	135,193.00	135,192.75	142,000.00	135,426.48	127,608.00
Budget Detail						
Budget Code	Description			Units	Price	Amount
DEPT	EQUIPMENT OPERATOR / MAINT WORKER			2.00	0.00	
DEPT	LEAD EQUIPMENT OPERATOR / MAINT WORKER			1.00	0.00	
DEPT	STORMWATER REGULAR SALARIES & WAGES TOTAL			0.00	0.00	127,608.00
460-3080-538-1400	OVERTIME	1,500.00	1,477.81	1,000.00	3,645.75	1,121.00
460-3080-538-1510	INCENTIVE PAY	300.00	210.86	300.00	83.11	0.00
460-3080-538-1520	UNIFORM ALLOWANCE	100.00	70.00	100.00	70.00	0.00
460-3080-538-1530	BOOT ALLOWANCE	500.00	402.00	500.00	882.00	360.00

Attachment: Holly Hill Budget FY23_24 SECOND HEARING (2023-R-52 : Final Budget Fiscal Year 2023

Budget Worksheet

For Fiscal: 2023-2024 Period Ending: 09/30/2024

Defined Budgets

		2021-2022 Total Budget	2021-2022 Total Activity	2022-2023 Total Budget	2022-2023 Total Activity	2023-2024 DEPT
Budget Detail						
Budget Code	Description			Units	Price	Amount
DEPT	BOOT ALLOWANCE 3 STAFF			3.00	120.00	360.00
460-3080-538-2100	FICA/MEDICARE TAXES	10,634.00	10,633.55	11,000.00	10,606.83	9,890.00
460-3080-538-2200	RETIREMENT CONTRIBUTION	19,211.00	16,740.90	21,000.00	20,359.90	21,810.00
460-3080-538-2300	LIFE & HEALTH INSURANCE	32,500.00	32,057.05	40,000.00	33,516.14	28,830.00
Budget Detail						
Budget Code	Description			Units	Price	Amount
DEPT	HEALTH INSURANCE			3.00	9,460.00	28,380.00
DEPT	LIFE INSURANCE			0.00	0.00	450.00
460-3080-538-2400	WORKERS COMP INSURANCE	6,700.00	6,626.94	7,800.00	6,405.39	7,410.00
460-3080-538-3101	PROFESSIONAL SERVICES	52,062.00	37,898.00	12,000.00	12,000.00	12,000.00
Budget Detail						
Budget Code	Description			Units	Price	Amount
DEPT	ERNIE PETERSON STORMWATER ASSESSMENT SERVICES			0.00	0.00	12,000.00
460-3080-538-3150	LEGAL/OFFICIAL ADVERTISNG	0.00	0.00	1,500.00	0.00	750.00
Budget Detail						
Budget Code	Description			Units	Price	Amount
DEPT	NEWSPAPER ADS, ETC.			0.00	0.00	750.00
460-3080-538-3400	OTHER SERVICES	73,930.00	36,338.64	60,380.00	44,505.30	66,000.00
Budget Detail						
Budget Code	Description			Units	Price	Amount
DEPT	RETENTION POND MAINTENANCE			0.00	0.00	12,000.00
DEPT	STREET SWEEPING CONTRACT			0.00	0.00	54,000.00
460-3080-538-3420	LANDSCAPING SERVICES	17,000.00	16,650.00	25,000.00	15,400.00	25,000.00
Budget Detail						
Budget Code	Description			Units	Price	Amount
DEPT	LANDSCAPING OF STORMWATER PROPERTIES			0.00	0.00	25,000.00
460-3080-538-4001	TRAVEL & PER DIEM	200.00	0.00	200.00	0.00	300.00
460-3080-538-4200	POSTAGE, FRT, EXPRESS	100.00	3.69	300.00	11.58	300.00

Attachment: Holly Hill Budget FY23_24 SECOND HEARING (2023-R-52 : Final Budget Fiscal Year 2023

Budget Worksheet

For Fiscal: 2023-2024 Period Ending: 09/30/2024

		2021-2022 Total Budget	2021-2022 Total Activity	2022-2023 Total Budget	2022-2023 Total Activity	Defined Budgets 2023-2024 DEPT
Budget Detail						
Budget Code	Description			Units	Price	Amount
DEPT	POSTAGE, FREIGHT & EXPRESS, NPDES INSERTS			0.00	0.00	300.00
460-3080-538-4301	UTILITY SERVICES	31,560.00	22,909.00	36,250.00	24,228.14	36,250.00
460-3080-538-4400	RENTALS & LEASES	3,450.00	1,469.39	700.00	341.60	700.00
Budget Detail						
Budget Code	Description			Units	Price	Amount
DEPT	PW COPIER LEASE @ 25%			0.00	0.00	700.00
460-3080-538-4500	INSURANCE/NON-EMPLOYEE	18,261.00	18,245.79	22,827.00	22,787.04	45,489.00
Budget Detail						
Budget Code	Description			Units	Price	Amount
DEPT	BROWN & BROWN PACKAGE POLICY			0.00	0.00	45,489.00
460-3080-538-4601	REPAIRS & MAINTENANCE	49,439.00	21,218.37	93,355.00	49,866.60	46,800.00
Budget Detail						
Budget Code	Description			Units	Price	Amount
DEPT	BUCKET TRUCK ANNUAL CERTIFICATION @ 50%			0.00	0.00	800.00
DEPT	CATCH BASIN & STORMWATER MANHOLE REPAIRS			0.00	0.00	4,500.00
DEPT	DITCH CLEANING			0.00	0.00	15,000.00
DEPT	FEC BLANKET UTILITY CROSSING FEES			0.00	0.00	4,500.00
DEPT	FOUNTAIN PUMPS & CONTROLS			0.00	0.00	4,500.00
DEPT	GRATES, MANHOLE COVERS, PIPE			0.00	0.00	10,000.00
DEPT	SW PIPE REPAIR, LINING, REPLACEMENT			0.00	0.00	7,500.00
460-3080-538-4611	MAINTENANCE CONTRACTS	2,600.00	1,479.30	800.00	133.56	800.00
Budget Detail						
Budget Code	Description			Units	Price	Amount
DEPT	COPIER AND PRINTER MAINTENANCE			0.00	0.00	800.00
460-3080-538-4650	FLEET CHARGES	13,859.00	6,467.84	16,500.00	6,540.23	15,000.00
Budget Detail						
Budget Code	Description			Units	Price	Amount
DEPT	STORMWATER VEHICLES, HEAVY EQUIPMENT, PUMPS			0.00	0.00	15,000.00
460-3080-538-4660	SMALL EQ REPAIR & MAINT	6,341.00	6,340.52	12,000.00	10,754.19	10,000.00

Attachment: Holly Hill Budget FY23_24 SECOND HEARING (2023-R-52 : Final Budget Fiscal Year 2023

Budget Worksheet

For Fiscal: 2023-2024 Period Ending: 09/30/2024

		2021-2022 Total Budget	2021-2022 Total Activity	2022-2023 Total Budget	2022-2023 Total Activity	2023-2024 DEPT
460-3080-538-4700	PRINTING & BINDING	870.00	870.00	250.00	8.72	300.00
Budget Detail						
Budget Code	Description			Units	Price	Amount
DEPT	STORMWATER LITERATURE, NPDES BROCHURES, ETC			0.00	0.00	300.00
460-3080-538-4910	OTHER SPECIAL COSTS	0.00	0.00	75,000.00	0.00	0.00
460-3080-538-4930	ADMIN SERV FEE ALLOCATION	192,752.00	192,752.00	233,042.00	233,042.00	202,673.00
Budget Detail						
Budget Code	Description			Units	Price	Amount
DEPT	DIRECT COST - ADMINISTRATION			1.00	154,214.00	154,214.00
DEPT	DIRECT COST - PW ADMIN			1.00	48,459.00	48,459.00
460-3080-538-4959	BAD DEBT EXPENSE	0.00	-20,251.73	0.00	0.00	0.00
460-3080-538-5100	OFFICE SUPPLIES	700.00	550.97	800.00	93.47	100.00
460-3080-538-5201	OPERATING SUPPLIES	7,000.00	5,871.53	8,000.00	-2,516.94	1,000.00
Budget Detail						
Budget Code	Description			Units	Price	Amount
DEPT	CONES, BARRICADES, PPE, ETC			0.00	0.00	1,000.00
460-3080-538-5204	SMALL TOOLS & EQUIPMENT	1,000.00	815.29	3,000.00	2,109.27	3,000.00
Budget Detail						
Budget Code	Description			Units	Price	Amount
DEPT	MISC TOOLS			0.00	0.00	1,000.00
DEPT	REPLACEMENT WEED EATERS AND EDGERS			0.00	0.00	2,000.00
460-3080-538-5219	UNIFORM EXPENSE	1,300.00	1,276.32	1,200.00	1,036.52	1,200.00
Budget Detail						
Budget Code	Description			Units	Price	Amount
DEPT	UNIFORM REPAIRS (ESTIMATED)			0.00	0.00	300.00
DEPT	UNIFORMS - $200 EST X 11 EMPLOYEES X 50%			0.00	0.00	700.00
DEPT	UNIFORMS $130 EST X 1 EMPLOYEE X 10%			0.00	0.00	100.00
DEPT	UNIFORMS $250 EST X 1 EMPLOYEE X 33%			0.00	0.00	100.00
460-3080-538-5250	FUEL & OIL SUPPLIES	19,600.00	11,010.59	12,500.00	5,232.96	20,000.00
Budget Detail						
Budget Code	Description			Units	Price	Amount
DEPT	GASOLINE & DIESEL, MOTOR OIL, ETC.			0.00	0.00	20,000.00

Attachment: Holly Hill Budget FY23_24 SECOND HEARING (2023-R-52 : Final Budget Fiscal Year 2023

Budget Worksheet

For Fiscal: 2023-2024 Period Ending: 09/30/2024

Defined Budgets

		2021-2022 Total Budget	2021-2022 Total Activity	2022-2023 Total Budget	2022-2023 Total Activity	2023-2024 DEPT
460-3080-538-5264	MACH/EQUIP CAPITAL-LIKE	5,936.00	5,242.16	7,500.00	0.00	0.00
460-3080-538-5300	ROAD MATERIAL & SUPPLIES	2,000.00	1,092.00	3,000.00	1,232.00	5,000.00
Budget Detail						
Budget Code	Description			Units	Price	Amount
DEPT	SHELL, LIMEROCK, SAND, FILL DIRT, ETC			0.00	0.00	5,000.00
460-3080-538-5400	BOOKS/PUBL/SUBSCR/MEMBE...	1,300.00	501.51	1,500.00	585.90	1,500.00
Budget Detail						
Budget Code	Description			Units	Price	Amount
DEPT	FL STORMWATER ASSOCIATION MEMBERSHIP			0.00	0.00	700.00
DEPT	FLORIDA SUNSHINE ONE CALL @ 33%			0.00	0.00	800.00
460-3080-538-5501	TRAINING & EDUCATION COST	1,500.00	570.25	1,500.00	0.00	2,000.00
Budget Detail						
Budget Code	Description			Units	Price	Amount
DEPT	MISC TRAINING COURSES: SAFETY, ETC.			0.00	0.00	2,000.00
460-3080-538-5920	DEPRECIATION EXPENSE	0.00	284,257.60	0.00	0.00	0.00
Division: 3080 - STORMWATER MANAGEME Total:		709,398.00	856,990.89	852,804.00	638,387.74	693,191.00
Division: 8110 - NON-DEPARTMENTAL						
460-8110-517-7161	SRF 2003 PRINCIPAL	339,602.00	0.02	347,541.00	347,540.14	0.00
460-8110-517-7261	SRF 2003 INTEREST	14,016.00	12,371.05	6,077.00	6,020.96	0.00
460-8110-580-1810	COMPENSATED LEAVE	0.00	4,791.60	0.00	0.00	0.00
460-8110-581-0400	TRANSFER TO W&S	30,462.00	30,462.00	30,414.00	30,414.00	28,722.00
Budget Detail						
Budget Code	Description			Units	Price	Amount
DEPT	DEBT SERVICE VACCON TRUCK (1/2 ANNUAL COST P & I)			0.00	0.00	28,722.00
460-8110-581-0460	TRANS TO WATER & SEWER	0.00	0.00	10,000.00	10,000.00	0.00
460-8110-581-0461	TRANSFER TO STORMWATER C...	1,775,000.00	1,775,000.00	7,500.00	7,500.00	674,000.00
Budget Detail						
Budget Code	Description			Units	Price	Amount
DEPT	TRANSFE FOR DUCKBILLS, PIPE LINING, FORD F-350			1.00	674,000.00	674,000.00
460-8110-581-1001	TRANSFER TO GENERAL FUND	23,400.00	23,400.00	23,400.00	23,400.00	0.00

Attachment: Holly Hill Budget FY23_24 SECOND HEARING (2023-R-52 : Final Budget Fiscal Year 2023

Budget Worksheet

For Fiscal: 2023-2024 Period Ending: 09/30/2024

		2021-2022 Total Budget	2021-2022 Total Activity	2022-2023 Total Budget	2022-2023 Total Activity	Defined Budgets 2023-2024 DEPT
460-8110-589-9910	CONTINGENCY	24,162.00	0.00	7,266.00	0.00	0.00
	Division: 8110 - NON-DEPARTMENTAL Total:	2,206,642.00	1,846,024.67	432,198.00	424,875.10	702,722.00
	Fund: 460 - STORMWATER FUND Surplus (Deficit):	0.00	-1,440,076.54	-150,000.00	151,311.96	0.00

Attachment: Holly Hill Budget FY23_24 SECOND HEARING (2023-R-52 : Final Budget Fiscal Year 2023

Attachment: Holly Hill Budget FY23_24 SECOND HEARING (2023-R-52 : Final Budget Fiscal Year 2023

HOLLY HILL
FLORIDA

STORM WATER CAPITAL PROJECTS (461)

REVENUE & EXPENDITURES

Budget FY 2023 - 2024

Budget Worksheet

For Fiscal: 2023-2024 Period Ending: 09/30/2024

		2021-2022 Total Budget	2021-2022 Total Activity	2022-2023 Total Budget	2022-2023 Total Activity	Defined Budgets 2023-2024 DEPT
Fund: 461 - STORMWTR CAPITAL PROJECTS						
Division: 0000 - UNDESIGNATED						
461-0000-361-1000	INTEREST & OTHER EARNINGS	0.00	189.99	0.00	8,459.95	0.00
461-0000-381-0460	TRANSFER FRM STORMWATER ...	1,775,000.00	1,775,000.00	17,500.00	17,500.00	674,000.00
461-0000-389-1000	PRIOR YEAR CARRYOVER	797,270.00	0.00	2,281,298.00	0.00	0.00
	Division: 0000 - UNDESIGNATED Total:	2,572,270.00	1,775,189.99	2,298,798.00	25,959.95	674,000.00
Division: 8110 - NON-DEPARTMENTAL						
461-8110-538-6400	MACHINERY & EQUIPMENT	0.00	0.00	17,500.00	15,873.15	74,000.00
Budget Detail						
Budget Code	Description			Units	Price	Amount
DEPT	FORD F-350 MINIM DUMP GAS			1.00	74,000.00	74,000.00
461-8110-580-6300	OTHER USES / INFRASTRUCTURE	2,572,270.00	40,000.00	2,281,298.00	199,910.17	600,000.00
Budget Detail						
Budget Code	Description			Units	Price	Amount
DEPT	DUCKBILLS ALONG RIVERSIDE RD 22SW02			1.00	400,000.00	400,000.00
DEPT	PIPE LINING OF STORMWATER PIPES 22SW06			1.00	200,000.00	200,000.00
461-8110-581-0460	TRANSFER TO STORMWATER F...	0.00	103,698.00	0.00	0.00	0.00
	Division: 8110 - NON-DEPARTMENTAL Total:	2,572,270.00	143,698.00	2,298,798.00	215,783.32	674,000.00
	Fund: 461 - STORMWTR CAPITAL PROJECTS Surplus (Deficit):	0.00	1,631,491.99	0.00	-189,823.37	0.00

Attachment: Holly Hill Budget FY23_24 SECOND HEARING (2023-R-52 : Final Budget Fiscal Year 2023

Attachment: Holly Hill Budget FY23_24 SECOND HEARING (2023-R-52 : Final Budget Fiscal Year 2023

HOLLY HILL
FLORIDA

SOLID WASTE ENTERPRISE (495)
REVENUE & EXPENDITURES

Budget FY 2023 - 2024

Budget Worksheet

For Fiscal: 2023-2024 Period Ending: 09/30/2024

		2021-2022 Total Budget	2021-2022 Total Activity	2022-2023 Total Budget	2022-2023 Total Activity	Defined Budgets 2023-2024 DEPT
Fund: 495 - SOLID WASTE ENTERPRISE						
Division: 0000 - UNDESIGNATED						
495-0000-343-4040	REFUSE	2,559,139.00	2,617,306.61	2,679,139.00	2,461,671.48	2,760,000.00
495-0000-361-1000	INTEREST & OTHER EARNINGS	270.00	212.61	300.00	705.94	346.00
495-0000-361-1500	INVESTMENT EARNINGS	10,399.00	24,345.68	12,200.00	94,781.23	25,658.00
495-0000-361-3010	INCR/DECR FAIR VAL-INVEST	0.00	-14,068.83	0.00	0.00	0.00
495-0000-381-1001	TRANSFER FROM GENERAL FU...	0.00	0.00	0.00	1,000,000.00	0.00
495-0000-389-1000	PRIOR YEAR CARRYOVER	1,878,432.00	0.00	2,353,497.00	0.00	351,000.00
Budget Detail						
Budget Code	Description			Units	Price	Amount
DEPT	PRIOR YEAR RESERVE			1.00	-351,000.00	-351,000.00
	Division: 0000 - UNDESIGNATED Total:	4,448,240.00	2,627,796.07	5,045,136.00	3,557,158.65	3,137,004.00
Division: 3040 - SOLID WASTE						
495-3040-534-3400	OTHER SERVICES	2,154,174.00	2,139,546.46	4,414,606.00	3,437,337.11	2,525,500.00
Budget Detail						
Budget Code	Description			Units	Price	Amount
DEPT	REDMAN CONSULTING CONTRACT			0.00	0.00	20,000.00
DEPT	TIPPING FEES DEBRIS			0.00	0.00	5,500.00
DEPT	WASTE PRO CONTRACT			0.00	0.00	2,500,000.00
495-3040-534-4500	INSURANCE/NON-EMPLOYEE	4,168.00	4,165.02	5,244.00	5,234.56	8,297.00
Budget Detail						
Budget Code	Description			Units	Price	Amount
DEPT	BROWN AND BROWN PACKAGE POLICY			0.00	0.00	8,297.00
495-3040-534-4930	ADMIN SERV FEE ALLOCATION	307,204.00	307,204.00	342,106.00	342,106.00	388,207.00
Budget Detail						
Budget Code	Description			Units	Price	Amount
DEPT	DIRECT COST ALLOC GEN FUND			1.00	339,748.00	339,748.00
DEPT	DIRECT COST PW ADMIN			1.00	48,459.00	48,459.00
495-3040-534-4950	MOBILITY FEE EXPENSE	0.00	0.00	200,000.00	200,000.00	200,000.00
Budget Detail						
Budget Code	Description			Units	Price	Amount
DEPT	PAVING MOBILITY FEE			0.00	0.00	200,000.00
495-3040-534-4959	BAD DEBT EXPENSE	19,026.00	19,025.17	15,000.00	0.00	15,000.00

Attachment: Holly Hill Budget FY23_24 SECOND HEARING (2023-R-52 : Final Budget Fiscal Year 2023

Budget Worksheet

For Fiscal: 2023-2024 Period Ending: 09/30/2024

		2021-2022 Total Budget	2021-2022 Total Activity	2022-2023 Total Budget	2022-2023 Total Activity	Defined Budgets 2023-2024 DEPT
495-3040-534-5264	MACH/EQUIP CAPITAL LIKE	564.00	0.00	0.00	0.00	0.00
495-3040-534-5920	DEPRECIATION EXPENSE	554.00	554.32	0.00	0.00	0.00
	Division: 3040 - SOLID WASTE Total:	2,485,690.00	2,470,494.97	4,976,956.00	3,984,677.67	3,137,004.00
Division: 8110 - NON-DEPARTMENTAL						
495-8110-581-0301	TRANSFER TO CAPITAL PROJEC...	895,000.00	895,000.00	0.00	0.00	0.00
495-8110-581-1002	TRANSFER TO GENERAL FUND	200,000.00	200,000.00	0.00	0.00	0.00
495-8110-581-9102	TRANSFER TO 002	800,000.00	800,000.00	630.00	630.00	0.00
495-8110-589-9910	CONTINGENCY	67,550.00	0.00	67,550.00	0.00	0.00
	Division: 8110 - NON-DEPARTMENTAL Total:	1,962,550.00	1,895,000.00	68,180.00	630.00	0.00
	Fund: 495 - SOLID WASTE ENTERPRISE Surplus (Deficit):	0.00	-1,737,698.90	0.00	-428,149.02	0.00

Attachment: Holly Hill Budget FY23_24 SECOND HEARING (2023-R-52 : Final Budget Fiscal Year 2023

HOLLY HILL
FLORIDA

CAPITAL PROJECTS

Budget FY 2023 - 2024

Attachment: Holly Hill Budget FY23_24 SECOND HEARING (2023-R-52 : Final Budget Fiscal Year 2023

CAPITAL PROJECTS/EQUIPMENT		
GENERAL FUND		
SCAG 61" Mower		17,000
Ford Interceptor Utility		58,000
Ford Interceptor Utility		55,000
Ford Interceptor Utility		55,000
	FUND 001 TOTAL	185,000
LOCAL OPTION FUEL TAX		
Annual Paving Program		285,000
Annual Sidewalk Replacment Program		50,000
	FUND 002 TOTAL	335,000
CAPITAL PROJECTS FUND		
Air Conditioner Replacements		40,000
YMCA Air Conditioner Replacements		20,000
Jon Boat Replacement		5,000
Sunrise Park Improvements		250,000
Sunrise Park Seawall		100,000
	FUND 301 TOTAL	415,000
WATER /SEWER R&R FUND		
Clearwell pumps, piping and valves		1,500,000
F-350 Ford Utility Box w/Hoist		125,000
Lift Station Pump Replacements		80,000
Well Flow Meters		30,000
New High Service Pump Motor		18,000
Well Check Valve Replacement		10,000
Tank Cleanings		10,000
New Golf Course Flow Valve		100,000
Smoke Testing of Sewer Lines		62,000
Midnight Flow Study		64,000
Resurface/Seal Walls of Manholes		150,000
Water Main Replacements 3rd Street/Cavanagh/Florida		763,574
	FUND 407 TOTAL	2,912,574
STORMWATER FUND		
Duckbills Along Riverside Rd		400,000
Pipe Lining of Stormwater pipes		200,000
Ford F-350 Mini Dump Gas		74,000
	TOTAL 460 FUND	674,000
TOTAL EQUIPMENT/CAPITAL PROJECTS		4,521,574

Attachment: Holly Hill Budget FY23_24 SECOND HEARING (2023-R-52 : Final Budget Fiscal Year 2023

FY 2023-2024 BUDGET

REVENUE AND EXPENDITURES FY 2023-2024	REVENUE	EXPENDITURE
001 - GENERAL FUND	$ 11,131,308	$ 11,131,308
002 - LOGT 2nd	$ 335,000	$ 335,000
004 - BUILDING AND ZONING	$ 390,289	$ 390,289
110 - LAW ENFORCEMENT TRUST	$ -	$ -
605 - POLICE EXPLORERS	$ 3,195	$ 3,195
130 - CRA	$ 3,282,403	$ 3,282,403
139 - CRA CAPITAL PROJECTS	$ 1,028,677	$ 1,028,677
301 - GENERAL CAPITAL PROJECTS	$ 415,000	$ 415,000
400 - WATER & SEWER	$ 8,414,650	$ 8,414,650
407 - WATER & SEWER R & R	$ 2,912,574	$ 2,912,574
460 - STORMWATER	$ 1,395,913	$ 1,395,913
461 - STORMWATER CAPITAL	$ 674,000	$ 674,000
495 - SOLID WASTE	$ 3,137,004	$ 3,137,004
TOTAL ALL FUNDS:	$ 33,120,013	$ 33,120,013

Attachment: FY2024 Budget Revenue & Expenditures Summary (2023-R-52 : Final Budget Fiscal Year

City Commission
1065 Ridgewood Ave
Holly Hill, FL 32117

SCHEDULED

Meeting: 09/26/23 06:00 PM
Department: City Clerk
Category: Presentation
Prepared By: Valerie Manning
Initiator: Valerie Manning
Sponsors:
DOC ID: 4246

PRESENTATION (ID # 4246)

FL League of Mayors and Business Watch - City Catalyst Grant Presentation

The Florida League of Mayors and Business Watch would like to recognize the city for winning the catalyst grant in the amount of $2500.

Attachment: Winner Letter - FL League of Mayors Catalyst Grant $2500 (4246 : FL League of Mayors and Business Watch - City Catalyst Grant

July 14, 2023

The Honorable Chris Via
Mayor, City of Holly Hill
1065 Ridgewood Ave
Holly Hill, FL 32117-2807

Dear Mayor Via:

Congratulations on your Imagination Library grant approval through the City Catalyst Grant Program!

The Florida League of Mayors (FLM) and Business Watch (BW) are pleased to inform you that a grant has been awarded to your city in the amount of $2,500. Your application stood out from the other applications and reflected solid commitment to the citizens you serve.

These funds must be used specifically for the designated purpose(s) by one-year from date of grant. (Please see the attached grant application.) A check (or direct deposit) in the amount of the grant will be sent directly to your city by September 8, 2023.

Recognition for City Catalyst Grant recipients will be provided during the Florida League of Mayors Business Meeting on Wednesday, August 9, 2023, at 4:45 p.m. ET at the Hilton Orlando Bonnet Creek in Orlando, Florida. This meeting is being held in conjunction with the Florida League of Cities Annual Conference, August 10-12, 2023, at the same hotel. We encourage your attendance and participation in this recognition ceremony. FLM staff will be in touch prior to August 9 to confirm participation and get pertinent information on participants.

We would also like to make a formal presentation in your city, where the public and media can see the value of the activity(s) this grant will provide to enhance the lives of your citizens. The FLM and BW staff will be in touch to coordinate these arrangements, following the Florida League of Cities Annual Conference.

We would like to capture your compelling stories of how this grant award was used to improve your community and the lives of your citizens! We will be featuring stories of our grantees on our website and through Florida League of Cities and Business Watch publications. Please email your photos, new releases or any other press events surrounding these projects to *flm@flcities.com.*

Again, congratulations on this recognition of your important efforts. We look forward to working with you during the coming year!

Sincerely,

C. Scott Dudley
Executive Director
Florida League of Mayors

Beth Rawlins
President
Business Watch

STAFF REPORT
CITY OF HOLLY HILL, FLORIDA

City Commission
Resolution

MEETING DATE: **September 26, 2023**
FROM: **Joseph Forte**
SUBJECT: **A Resolution of the City Commission of the City of Holly Hill, Florida, Authorizing the City Manager to Sign an Amended Renewal Lease Agreement Between the City and the Volusia/Flagler Ymca; Establishing the Terms of This Agreement; Providing for Severability; and Providing an Effective Date.**
NUMBER: **2023-R-53**
APPLICANT:
PLANNER:

DISCUSSION:

The Volusia/Flagler YMCA currently holds a contract with the City of Holly Hill to serve the community with certain recreational activities at the FACILITY located at 1046 Daytona Avenue. This discussion is to approve a contract for a period of (1) one year with intention that the entire Agreement will be negotiated and renewed providing both parties agree to the terms and conditions of the lease no later than June 30, 2024.

In this contract, the updates and changes are:

The following items have not changed in this contract:

- No YMCA administration overhead charge to the City;
- Maintenance costs shall remain the same as under the current agreement;
- The fee to provide these services would remain at $45,000 annually;
- YMCA will pay for gas to heat the pool year for 10 months.

Staff recommends that the City Commission accept the lease agreement with the YMCA and that the city covenants and agrees to pay to the YMCA as a subsidy for the purpose of having one full-time staff manager assigned to the facility, the sum of forty-five thousand dollars ($45,000) per year, payable quarterly with first payment of $11,250 paid on October 15, 2023. Remaining payments as follows in each year of the agreement:

$11,250 due October 15,

$11,250 due on January 15,

$11,250 due on April 15,

$11,250 due on July 15,

The agreement would be effective October 1, 2023 and would be for a period of (1) One year with expiring on September 30, 2024.

FISCAL ANALYSIS:

Fully funded in FY 2023-2024 budget.

STAFF RECOMMENDATION:

Approve the YMCA Lease Agreement and authorize the City Manager to execute the contract with Volusia/Flagler YMCA to operate as the recreation program provider for the FACILITY located at 1046 Daytona Avenue as outlined in the attached lease agreement.

COMMISSION GOAL:

Goal #1: Develop and maintain a sound and sustainable financial plan for the city that establishes sufficient reserves for all funds, ensures (whenever possible) that user fees pay for services rendered, provides a realistic capital improvement program, and encourages public/private sector partnerships and intergovernmental partnerships.

Goal #5: Promote a small town city "branding" that focuses on the city's accessible staff and interactive use of technologies (i.e. city website), the city's business friendly approach to attract and retain business, and the city's available open space, parks, and waterfront amenities that enhance the quality of life for citizens.

MOTION:

APPROVE THE ATTACHED RENEWAL LEASE AGREEMENT AND AUTHORIZING THE CITY MANAGER TO EXECUTE THE AMENDED AGREEMENT WITH VOLUSIA/FLAGLER YMCA TO OPERATE AS RECREATION PROVIDER - 1046 DAYTONA AVENUE FACILITY.

ATTACHMENTS:

- YMCA Utility Bill Summary (13) (XLSX)
- YMCA Lease Agreement 2023-24 FINAL (RTF)
- YMCA Lease Agreement 2023-24 REDLINE (RTF)

Resolution No. 2023-53

A RESOLUTION OF THE CITY COMMISSION OF THE CITY OF HOLLY HILL, FLORIDA, AUTHORIZING THE CITY MANAGER TO SIGN AN AMENDED RENEWAL LEASE AGREEMENT BETWEEN THE CITY AND THE VOLUSIA/FLAGLER YMCA; ESTABLISHING THE TERMS OF THIS AGREEMENT; PROVIDING FOR SEVERABILITY; AND PROVIDING AN EFFECTIVE DATE.

A RESOLUTION OF THE CITY COMMISSION OF THE CITY OF HOLLY HILL, FLORIDA, AUTHORIZING THE CITY MANAGER TO SIGN AN AMENDED RENEWAL LEASE AGREEMENT BETWEEN THE CITY AND THE VOLUSIA/FLAGLER YMCA; ESTABLISHING THE TERMS OF THIS AGREEMENT; PROVIDING FOR SEVERABILITY; AND PROVIDING AN EFFECTIVE DATE.

WHEREAS, The City of Holly Hill desires to continue its relationship with the Volusia/Flagler YMCA to provide recreational programs at the FACILITY located at 1046 Daytona Avenue; and

WHEREAS, the YMCA has a nationally recognized reputation and long-term history of providing quality community recreation programs.

NOW, THEREFORE, BE IT RESOLVED BY THE CITY COMMISSION OF THE CITY OF HOLLY HILL, FLORIDA:

SECTION 1. That the City Commission approve the attached agreement and the City Manager is hereby authorized to sign the lease agreement, attached hereto, so that the Volusia/Flagler YMCA may continue to perform as a recreation provider at the Daytona Avenue FACILITY.

SECTION 2. That the term of this agreement shall commence on October 1, 2023 and shall continue for a period of (1) one year, expiring on September 30, 2024. The entirety of this Agreement will be negotiated for renewal providing each party has agreed upon new terms and conditions no later than June 30, 2024.

SECTION 3. SEVERABILITY. If any section or portion of a section of this Resolution proves to be invalid, unlawful, or unconstitutional, it shall not be held to invalidate or impair the validity, force, or effect of any other section or part of this Resolution.

SECTION 4. EFFECTIVE DATE. This Resolution shall take effect immediately upon its adoption.

APPROVED AND AUTHENTICATED on this 26th day of SEPTEMBER, 2023.

YMCA Utilities

Fiscal Year 2022-2023

FPL - 79200-89427	
October	1,874.21
November	1,912.73
December	1,759.47
January	1,654.46
February	2,095.61
March	2,098.68
April	2,274.41
May	2,219.09
June	2,412.37
July	2,609.73
August	
September	
Total	**20,910.76**

TECO - Water Heater	
October	116.38
November	85.46
December	98.93
January	114.67
February	125.08
March	90.65
April	88.86
May	87.22
June	85.57
July	77.94
August	
September	
Total	**970.76**

TECO - Gym Heater	
October	720.84
November	34.68
December	32.74
January	53.26
February	32.74
March	45.01
April	32.74
May	34.53
June	32.74
July	32.74
August	
September	
Total	**1,052.02**

Attachment: YMCA Utility Bill Summary (13) (2023-R-53 : YMCA Lease Agreement Renewal)

Water & Sewer - 10067-13406	
October	643.46
November	1,932.50
December	916.86
January	2,477.56
February	995.48
March	1,277.00
April	1,109.39
May	1,007.99
June	825.72
July	916.86
August	1,076.34
September	
Total	**13,179.16**

Month by Month Total	
October	3,354.89
November	3,965.37
December	2,808.00
January	4,299.95
February	3,248.91
March	3,511.34
April	3,505.40
May	3,348.83
June	3,356.40
July	3,637.27
August	1,076.34
September	-
Total	**36,112.70**

Attachment: YMCA Utility Bill Summary (13) (2023-R-53 : YMCA Lease Agreement Renewal)

CITY OF HOLLY HILL - YMCA LEASE AGREEMENT

THIS AGREEMENT made, September 26, 2023, - by and between CITY OF HOLLY HILL, a Florida municipality, (CITY) and VOLUSIA FLAGLER FAMILY YOUNG MEN'S CHRISTIAN ASSOCIATION, INC., a Florida non-profit corporation, ("YMCA").

WHEREAS, the CITY owns the property located at 1046 Daytona Ave. Holly Hill, FL 32117, as delineated in Exhibit "A" (hereinafter referred to as FACILITIES), and;

WHEREAS, the CITY has contracted with the YMCA since June 1, 2010 to provide certain recreation programs to the community, and;

WHEREAS, the YMCA is recognized nationwide for its expertise at providing recreation programs in a cost effective and efficient manner;

WHEREAS, the CITY and the YMCA desire to enter into this Agreement for the CITY to retain the YMCA to provide the CITY's family health and wellness programs as more specifically set forth herein.

NOW, THEREFORE, in consideration of the terms, conditions, promises, covenants and payments hereinafter set forth, the CITY and YMCA agree as follows:

ARTICLE I - CONDITIONS, TERM AND RENTAL

Section 1.1 Conditions

a) The CITY, for and in consideration of the covenants and agreements herein contained on the part of the YMCA, shall lease FACILITIES to the YMCA, to have and to hold the same for and during the term of this Lease, as hereafter set forth.

b) The FACILITIES shall be referred to as the CITY of Holly Hill YMCA in documents related to programs provided at said FACILITIES and all logos and signage. All logos and signage shall, to the extent possible, incorporate the City of Holly Hill Logo.

Section 1.2 YMCA's Fixtures

a) The YMCA has been in possession and operation of the FACILITIES since June 1, 2010 and has full knowledge of the conditions of the FACILITIES, therefore YMCA takes the FACILITIES in an “AS IS” condition.”

b) CITY is not obligated to provide any other equipment or other improvements to the FACILITIES as part of this Lease.

c) YMCA shall furnish all other equipment that is necessary for the use by the YMCA including, but not limited to, office equipment, nautilus equipment, free weights and sporting equipment, etc. YMCA agrees to maintain said equipment in a safe, sanitary and neat condition, and in accordance with applicable governmental standards at all times.

Attachment: YMCA Lease Agreement 2023-24 FINAL (2023-R-53 : YMCA Lease Agreement Renewal)

d) All of YMCA'S trade fixtures, and all personal property, signage, apparatus, machinery and equipment hereafter supplied by YMCA and located upon the FACILITIES, whether or not the same are affixed thereto, shall be and remain the personal property of the YMCA and may, at the option of the YMCA, be removed from the FACILITIES, provided YMCA is not in default at the termination of this Lease or as otherwise provided in Section 4.4. The YMCA shall repair and restore the FACILITIES to the condition that existed when the original Lease commenced; reasonable wear and tear excepted and the YMCA shall repair all damages to the FACILITIES that occurs during the removal of the fixtures and personal property at the end of the Lease term. Any fixtures or personal property that are not removed by the YMCA at the end of the Lease term shall be deemed the sole and exclusive property of the CITY.

Section 1.3 Rental Commencement Date

This Lease shall become effective October 1, 2023 and shall continue for a period of (1) one year expiring on September 30, 2024. The Agreement may be renewed in one year increments providing each party has agreed upon terms and conditions no later than June 30th of each year.

Section 1.4 Subsidy

The City covenants and agrees to pay to the YMCA as a subsidy for the purpose of having one full time staff manager assigned to the facility, the sum of forty-five thousand dollars ($45,000) per year, payable quarterly with first payment of $11,250 paid on October 15, 2023. Remaining payments as follows:

$11,250 due on January 15,
$11,250 due on April 15,
$11,250 due on July 15,

Section 1.5 Renewal, Replacement and Repair

a) Repairs with an estimated cost in excess of $1,500 per occurrence shall be the full responsibility of the CITY. For example, if the air conditioner requires a repair in the amount of $2,000, the CITY shall be responsible for the entire cost of that repair and not just the amount that exceeded $1,500. However, if the damage is caused by the negligent or intentional acts of the employees, agents, members or guests of the YMCA shall be the responsibility of the YMCA to repair or replace regardless of the cost, and not the responsibility of the CITY.

b) YMCA may construct additional improvements on the FACILITIES only with the prior written approval of CITY. The cost of such improvements and the cost of operation and maintenance thereof shall be the responsibility of YMCA.

c) The CITY shall have the right to inspect the Facility monthly to determine maintenance needs upon providing the YMCA with at least 24 hours advance notice.

Attachment: YMCA Lease Agreement 2023-24 FINAL (2023-R-53 : YMCA Lease Agreement Renewal)

Section 1.6 Utilities

The City shall make all arrangements for and pay timely all costs of all utilities and services furnished to or used by it, which shall be, electricity, water, storm water, internet access, trash collection and sewer services. YMCA will pay gas utility for the purpose of heating the pool to a temperature of 84-86 degrees for all months except January and February.

Section 1.7 Additional Taxes

The parties acknowledge that as a YMCA Facility, YMCA presently enjoys a tax exempt status, however, to the extent the same may be applicable, YMCA shall pay all taxes, including any tax due on any rent payable under this Lease, all personal property taxes, all real property taxes, leasehold improvements and/or leasehold interest taxes, sales taxes which may be assessed against or arise by reason of YMCA'S leasing of the FACILITIES or its operation of the FACILITIES as a YMCA Facility.

Section 1.8 Financial Reports

a) During the term of this Lease, including the term of any extension or renewal, YMCA shall submit to CITY annual financial reports, audited by an independent certified public accountant, within ninety (90) days after final approval of the report by the YMCA Board of Directors.

b) The annual financial reports shall include a separate accounting of all revenues and expenditures relating to the FACILITIES and the City of Holly Hill YMCA. The City reserves the right to verify the accuracy of the representations contained in the annual financial reports and the YMCA will make its financial records available for inspection at the end of each quarter for review by the City or its designee.

ARTICLE II – USE AND OPERATION OF FACILITY

Section 2.1 YMCA Use

YMCA shall occupy and use the FACILITIES for a YMCA Facility and shall provide public family health and wellness programs that are typically provided by the YMCA. These programs shall inclu the following, or similar types of activities: chair yoga, yoga, Tia Chi Balance, Zuma, Boot Camp, aquatic programs, dance class, karate, indoor cycling.

The pool shall remain open twelve (10) months out of the year excluding the months of January and February. Pool schedule may be adjusted based on member usage. However, the pool must be open a minimum of 5 hours per day, every day the YMCA is open. If the pool does not remain open 5 hou er day, the city will deduct $150.00, each day it is not open, from the next quarterly payment.

The Pool Hours as of 10/4, will be Monday-Friday 7:00 am -12:00 pm.
Tuesday and Thursday the YMCA will host Water Aerobics at 5:30 pm
Saturday 9:00 am-2:00 pm

Attachment: YMCA Lease Agreement 2023-24 FINAL (2023-R-53 : YMCA Lease Agreement Renewal)

Section 2.2 CITY Use ofFacilities

YMCA shall permit and allow CITY, without charge, to use the gym and pool facilities located on the FACILITIES, subject to the following conditions:

a) Use of said FACILITIES by CITY shall not exceed a total of **20** hours per calendar year.

b) Any hours CITY does not use said FACILITIES in one (1) calendar year shall not be carried forward to the next calendar year.

c) Dates and times for use of said FACILITIES by CITY shall be subject to mutual agreement between director of YMCA's Holly Hill branch and the City Manager.

Section 2.3 CITY Use of Parking Areas

The YMCA shall permit and allow CITY, without charge, to use the parking lots and other parking areas located on the FACILITIES for parking of vehicles during special events and activities conducted on any portion of adjacent CITY property, including, but not limited to, CITY hall, gymnasium, athletic fields, municipal complex and grounds.

Section 2.5 Compatibility

a) The YMCA agrees to operate, maintain and promote the operation and maintenance of the FACILITIES in a manner consistent with nationwide and local YMCA policies and practices.

b) The YMCA agrees that operation of the FACILITIES shall be in accordance with applicable CITY regulations. The YMCA further agrees to comply with reasonable requests of the CITY pertaining to the operation and promotion of the City of Holly Hill YMCA in order to provide for the safety of YMCA members and the public.

c) YMCA agrees that operation of the FACILITIES as a YMCA Facility will not unreasonably interfere with the use of the contiguous park area by members of the general public or by CITY. It is the parties' intention that the operation of the FACILITIES will be compatible with other CITY Recreation Programs.

d) The YMCA agrees that operation of the FACILITIES shall not interfere with the use of other CITY recreational facilities such as sports fields utilized by various team sports organizations.

e) The parties hereto agree to coordinate any special events and/or programs within their operations. YMCA agrees that it will not discriminate in its hiring or promotional practices.

f) The YMCA shall not duplicate youth sports offered at Hollyland Park or the 1200 Center Avenue location which may be offered by the CITY or another party.

Section 2.6 Maintenance

Attachment: YMCA Lease Agreement 2023-24 FINAL (2023-R-53 : YMCA Lease Agreement Renewal)

It shall be the responsibility of YMCA to keep the premises clean, sanitary and free from trash and debris. The complete upkeep and maintenance shall be borne by YMCA and YMCA agrees to maintain the premises in accordance with the terms and conditions of this Lease and consistent with prudent and well-reasoned maintenance procedures and techniques. The CITY shall be responsible for all lawn and landscaping maintenance.

Section 2.7 Schedule of Operation

Holly Hill YMCA staff will determine the hours of operation of the Holly Hill YMCA. Prior to changing any facility hours the YMCA CEO will confer with the Holly Hill City Manager.

Section 2.8 Concessions

The YMCA may, but shall not be required to, dispense food and/or drink on the premises for consumption by users of the Facility.

Section 2.9 Fees

a) Holly Hill YMCA member and program fees will be set by the CFO in accordance with the appro of the Volusia Flagler YMCA Board of Directors
b) The YMCA will subsidize those who cannot afford full monthly membership rates at the current Y YOUR plan rates.
c) The YMCA will provide a daily fee option of $5.00 to Holly Hill residents that is inclusive of all r fee based activities.
d) There will be no YMCA administration overhead charged to the City of Holly Hill.

ARTICLE III - INSURANCE

Section 3.1 Insurance Requirements and Indemnification

YMCA shall fully indemnify and otherwise hold harmless CITY from any and all claims, demands or suits arising out of or otherwise attributable to YMCA or the occupancy of the FACILITIES by YMCA asserted by any party whatsoever, and this indemnity shall include all costs incurred by CITY, including reasonable defense attorney's fees. Without limiting any of the other obligations or liabilities of YMCA, YMCA shall provide, pay for, and maintain in force, throughout the term of this Lease, the insurance coverage set forth in this Article.

a) Workers' Compensation Insurance to apply for all employees in compliance with the "Workers Compensation Law" of the State of Florida and all applicable Federal laws. In addition, the policy(s) must include:

b) Employers' Liability with a limit of One Hundred Thousand Dollars ($100,000.00) each accident.

c) Comprehensive General Liability with minimum limits of One Million Dollars ($1,000,000.00) per occurrence combined single limit for Bodily Injury Liability and

Attachment: YMCA Lease Agreement 2023-24 FINAL (2023-R-53 : YMCA Lease Agreement Renewal)

Property Damage Liability. Coverage must be afforded on a form no more restrictive than the latest edition of the Comprehensive General Liability policy, without restrictive endorsements, as filed by the Insurance Services Office and must include:

i. Premises and/or Operations
11. Independent Contractors

d) Personal Injury Coverage with Employee and Contractual Exclusions removed with minimum limits of coverage equal to those required for Bodily Injury Liability and Property Damage Liability.

Section 3.2 Additional Insured

CITY shall be included as an "Additional Insured" in the name of "City of Holly Hill" with respect to liability arising out of operations performed for CITY by or on behalf of YMCA or acts or omissions of CITY in connection with general supervisions of such operations.

Section 3.3 Notification

The policy(s) must be endorsed to provide the City of Holly Hill with thirty (30) days' notice of cancellation and/or restriction.

ARTICLE IV - TERMINATION

Section 4.1 Termination by CITY

The occurrence of any of the following may cause this Lease to be terminated at the option of the CITY by notice to the YMCA.

a) Assignment by YMCA for the benefit of creditors.

b) Abandonment or discontinuation of operations at the FACILITIES consisting of three consecutive days during usual business hours and on such days as comparable facilities are open for business, unless such abandonment or discontinuation shall be due to causes beyond YMCA'S reasonable control such as, without limitation, acts of God, government laws or action, war, civil commotion, casualty, fire, storm, labor disputes or energy shortages, as long as operations commence immediately after the event causing the discontinuance ceases to exist.

c) The CITY shall have the right to terminate this Lease after thirty (30) days written notice by registered mail to YMCA, of the non-performance of any provisions of this Lease, unless the same shall have been corrected or remedial action started and diligently pursued within such period, to the reasonable satisfaction of the CITY.

Upon any termination pursuant to this Section, or if YMCA fails to exercise its option to renew, CITY shall have, in addition to any other remedies, the option to require that YMCA remove, at YMCA'S cost, all improvements made by YMCA to the FACILITIES. If the YMCA fails to remove the fixtures and personal property as requested by the City, said

Attachment: YMCA Lease Agreement 2023-24 FINAL (2023-R-53 : YMCA Lease Agreement Renewal)

fixtures and personal property shall become the sole property of the CITY.

Section 4.2 Termination by YMCA

YMCA shall have the right upon thirty (30) days written notice, prior to the next scheduled quarterly payment to the CITY, to terminate this Lease at any time after the occurrence of one or more of the following events:

a) Issuance by any court of competent jurisdiction of any injunction substantially restricting the use of the facilities for its intended purposes, and the remaining in force of said injunction or period of more than thirty (30) calendar days.

b) A breach by the CITY of any of the terms, covenants or conditions contained in this Lease and the failure of the CITY to remedy such breach within thirty (30) days after receipt of written notice sent by registered mail from YMCA of the existence of such breach, unless the same shall have been corrected or remedial action started and diligently pursued within such period.

c) The assumption by the United States Government or any authorized agency thereof, or any other governmental agency, or the operation control or use of the facilities, or any substantial part, or parts, thereof in such a manner as substantially to restrict YMCA'S operations for a period of thirty (30) calendar days or more.

Section 4.3 Right to Remove Personal Property

At the termination of the Lease, either by expiration of the term or otherwise (except in the case of termination without cause by the YMCA), YMCA shall have the right to remove from the FACILITIES all its personal property and equipment used in the operation provided, however, that the CITY shall have a first and prior lien upon all such personal property to secure the payment to it of any and all sums due from YMCA.

Section 4.4 Termination Without Cause

a) CITY shall have the right to terminate this Lease upon 90days notice without cause and without penalty. Notwithstanding any provision hereof to the contrary, upon such termination, the YMCA shall have the option of removing equipment and furnishings provided by the YMCA as long as the YMCA repairs any damage sustained in the removal of said equipment and furnishings.

b) YMCA may terminate this Lease without cause upon providing CITY with 90days written notice. Upon such termination and as liquidated damages for the termination, YMCA agrees to convey to the CITY and leave in the FACILITIES all furnishings and equipment normally located thereon by YMCA.

Attachment: YMCA Lease Agreement 2023-24 FINAL (2023-R-53 : YMCA Lease Agreement Renewal)

ARTICLE V - MISCELLANEOUS

Section 5.1 Assignment

a) Subject to the provisions of this Lease, YMCA shall not assign or encumber its interest in this Lease or in the FACILITIES, or allow any other person or entity (except YMCA'S authorized representatives) to occupy or use all or any part of the premises and the building and improvements located thereon, without first obtaining CITY'S written consent.

b) CITY shall not unreasonably withhold or delay its consent. However, any proposed assignee must have similar background and experience in the operation of a YMCA Facility, must operate the facility and provide substantially the same services on the FACILITIES as provided in this Lease and must have adequate financial resources.

c) Should YMCA assign or attempt to assign this Lease or sublet any portion of the FACILITIES without the prior written consent of the CITY, then this Lease shall be terminated forthwith, without prior notice to YMCA. No consent to any assignment or encumbrance shall constitute a waiver of the provisions of this Section.

Section 5.2 Risk of Loss

The YMCA agrees to assume all risks of loss by fire, water, weather or other unforeseen damages to or destruction of any property or stock placed on the premises by the CITY and to hold the CITY harmless from any responsibility or liability therefore.

Section 5.3 CITY'S Warranties - Quiet Enjoyment

a) CITY covenants and warrants that it has full right and lawful authority to enter into this Lease for the full te1m hereof.

b) CITY covenants and agrees to and with YMCA that at all times when YMCA is not in default under the terms of and during the term of this Lease, YMCA'S quiet and peaceable enjoyment of the FACILITIES shall not be disturbed or interfered with by CITY or any person claiming by, through or under CITY.

Section 5.4 Approvals

It is understood by the parties to this Lease that where the approval of either of the parties is required by the Lease, such approval shall not be unreasonably withheld.

Section 5. 5 No waiver

Failure of either party to insist upon strict performance of any covenant or condition of this Lease, or to exercise any right herein contained, shall not be construed as a waiver or relinquishment for the future of any such covenant, condition or right; but the same shall remain in full force and effect. None of the conditions, covenants or provisions of this Lease shall be waived or modified except by the parties hereto in writing.

Section 5.6 Net Lease

This Lease is, except to the extent otherwise provided herein, a net lease, and YMCA hereby

Attachment: YMCA Lease Agreement 2023-24 FINAL (2023-R-53 : YMCA Lease Agreement Renewal)

assumes and agrees to pay and perform all payments, expenses, duties and obligations with relation to the FACILITIES, the improvements constructed upon the FACILITIES and appurtenances thereto, maintenance and operation thereof, whether such duties and obligations would otherwise be construed to be those of the CITY or YMCA, except as otherwise provided herein, so that no matter from what source arising, if anything shall be required to be done in, upon or about the FACILITIES, the improvements constructed upon the FACILITIES or appurtenances thereto, the same shall be done and fulfilled at the sole expense and responsibility of YMCA, without any expense, liability, or obligations whatsoever to or on the CITY, except for such obligations as are expressly assumed by the CITY herein.

Section 5.7 Independent Contractor

a) YMCA is an independent contractor under this Lease. Services provided by YMCA shall be by employees of YMCA and subject to the supervision by YMCA, and not as officers, employees or agents of the CITY.

b) Personnel policies, tax responsibilities, social security and health insurance, employee benefits, travel, per diem policies, purchasing policies and other similar administrative procedures applicable to services rendered by YMCA in the FACILITIES shall be those of YMCA.

c) Nothing contained in this Lease shall be deemed or construed by the Parties hereto or by any third party to create the relationship of principal and agent or of partnership or of joint venture or of any association whatsoever between the CITY and YMCA, it being expressly understood and agreed that neither the method of computation of rent nor any of the other provisions contained in this Lease nor any act or acts of the parties hereto shall be deemed to create any relationship between the CITY and YMCA other than the relationship of landlord and tenant.

Section 5.8 Entire Agreement

This Lease expresses the whole agreement between the parties, there being no representation, warranties or other understanding not hereto expressly set forth or provided for. No change or modification of or addition to this Lease shall be valid unless in writing and signed by parties hereto.

Section 5.9 Governing Law

This Lease shall be governed by and interpreted in accordance with the laws of the State of Florida. Venue for any litigation arising out of or related to this Lease shall be in State Court, Seventh Judicial Circuit, Volusia County, Florida and the parties specifically waive any Federal Court jurisdiction. The prevailing party in any litigation arising out of or related to this Lease shall be reimbursed reasonable attorneys' fees and costs, including costs of appeal.

Section 5.10 Damage to FACILITIES

If at any time during the term of this Lease the FACILITIES shall be lost or destroyed so as to be wholly or partially untenantable, CITY shall have the option of either restoring the

Attachment: YMCA Lease Agreement 2023-24 FINAL (2023-R-53 : YMCA Lease Agreement Renewal)

FACILITIES or terminating this Lease, and shall exercise the option within the first sixty (60) days after the casualty.

Section 5.11 Holly Hill YMCA Advisory Board

The Corporate Board shall include one (1) non-elected representative from the City of Holly Hill. The FACILITY shall have a local board made up of 5-7 members of which one will serve on the Corporate Board.

Section 5.12 Website

YMCA will update their website to include more inclusive information about the Holly Hill facility

Section 5.13 Notices

All notices and other communications hereunder shall be in writing and shall be deemed to have been duly given if sent by Certified Mail, Return Receipt Requested, as follows:

TO YMCA:
President/CEO
Volusia Flagler YMCA,
Inc. 761 International
Speedway
DeLand, FL 32724

TO CITY:
City Manager
City of Holly Hill
1065 Ridgewood Avenue
Holly Hill, FL 32117

Attachment: YMCA Lease Agreement 2023-24 FINAL (2023-R-53 : YMCA Lease Agreement Renewal)

IN WITNESS WHEREOF, the parties hereto have made and executed this Lease by and through their authorized representatives on the respective dates under each signature.

CITY OF HOLLY HILL, FLORIDA

By: _____
Joseph A. Forte, City Manager

ATTEST:_____
Valerie Manning, City Clerk

VOLUSIA / FLAGLER YOUNG MENS CHRISTIAN ASSOCIATION, INC.

By: _____

Chris Seilkop, President/CEO

Attachment: YMCA Lease Agreement 2023-24 FINAL (2023-R-53 : YMCA Lease Agreement Renewal)

CITY OF HOLLY HILL - YMCA LEASE AGREEMENT

THIS AGREEMENT made, September 2826, 20222023, - by and between CITY OF HOLLY HILL, a Florida municipality, (CITY) and VOLUSIA FLAGLER FAMILY YOUNG MEN'S CHRISTIAN ASSOCIATION, INC., a Florida non-profit corporation, ("YMCA").

WHEREAS, the CITY owns the property located at 1046 Daytona Ave. Holly Hill, FL 32117, as delineated in Exhibit "A" (hereinafter referred to as FACILITIES), and;

WHEREAS, the CITY has contracted with the YMCA since June 1, 2010 to provide certain recreation programs to the community, and;

WHEREAS, the YMCA is recognized nationwide for its expertise at providing recreation programs in a cost effective and efficient manner;

WHEREAS, the CITY and the YMCA desire to enter into this Agreement for the CITY to retain the YMCA to provide the CITY's family health and wellness programs as more specifically set forth herein.

NOW, THEREFORE, in consideration of the terms, conditions, promises, covenants and payments hereinafter set forth, the CITY and YMCA agree as follows:

ARTICLE I - CONDITIONS, TERM AND RENTAL

Section 1.1 Conditions

a) The CITY, for and in consideration of the covenants and agreements herein contained on the part of the YMCA, shall lease FACILITIES to the YMCA, to have and to hold the same for and during the term of this Lease, as hereafter set forth.

b) The FACILITIES shall be referred to as the CITY of Holly Hill YMCA in documents related to programs provided at said FACILITIES and all logos and signage. All logos and signage shall, to the extent possible, incorporate the City of Holly Hill Logo.

Section 1.2 YMCA's Fixtures

a) The YMCA has been in possession and operation of the FACILITIES since June 1, 2010 and has full knowledge of the conditions of the FACILITIES, therefore YMCA takes the FACILITIES in an “AS IS” condition.”

b) CITY is not obligated to provide any other equipment or other improvements to the FACILITIES as part of this Lease.

c) YMCA shall furnish all other equipment that is necessary for the use by the YMCA including, but not limited to, office equipment, nautilus equipment, free weights and sporting equipment, etc. YMCA agrees to maintain said equipment in a safe, sanitary and neat condition, and in accordance with applicable governmental standards at all times.

Attachment: YMCA Lease Agreement 2023-24 REDLINE (2023-R-53 : YMCA Lease Agreement Renewal)

d) All of YMCA'S trade fixtures, and all personal property, signage, apparatus, machinery and equipment hereafter supplied by YMCA and located upon the FACILITIES, whether or not the same are affixed thereto, shall be and remain the personal property of the YMCA and may, at the option of the YMCA, be removed from the FACILITIES, provided YMCA is not in default at the termination of this Lease or as otherwise provided in Section 4.4. The YMCA shall repair and restore the FACILITIES to the condition that existed when the original Lease commenced; reasonable wear and tear excepted and the YMCA shall repair all damages to the FACILITIES that occurs during the removal of the fixtures and personal property at the end of the Lease term. Any fixtures or personal property that are not removed by the YMCA at the end of the Lease term shall be deemed the sole and exclusive property of the CITY.

YMCA will replace the sign face on the sign on Daytona Ave.

Section 1.3 Rental Commencement Date

This Lease shall become effective October 1, 20223 and shall continue for a period of (1) one year expiring on September 30, 20232024. The Agreement may be renewed in one year increments providing each party has agreed upon terms and conditions no later than June 30th of each year.

Section 1.4 Subsidy

The City covenants and agrees to pay to the YMCA as a subsidy for the purpose of having one full time staff manager assigned to the facility, the sum of forty-five thousand dollars ($45,000) per year, payable quarterly with first payment of $11,250 paid on October 15, 20222023. Remaining payments as follows:

$11,250 due on January 15, 023
$11,250 due on April 15, 2023
$11,250 due on July 15, 2023

Section 1.5 Renewal, Replacement and Repair

a) Repairs with an estimated cost in excess of $1,500 per occurrence shall be the full responsibility of the CITY. For example, if the air conditioner requires a repair in the amount of $2,000, the CITY shall be responsible for the entire cost of that repair and not just the amount that exceeded $1,500. However, if the damage is caused by the negligent or intentional acts of the employees, agents, members or guests of the YMCA shall be the responsibility of the YMCA to repair or replace regardless of the cost, and not the responsibility of the CITY.

b) YMCA may construct additional improvements on the FACILITIES only with the prior written approval of CITY. The cost of such improvements and the cost of operation and maintenance thereof shall be the responsibility of YMCA.

c) The CITY shall have the right to inspect the Facility monthly to determine maintenance needs upon providing the YMCA with at least 24 hours advance notice.

Attachment: YMCA Lease Agreement 2023-24 REDLINE (2023-R-53 : YMCA Lease Agreement Renewal)

Section 1.6 Utilities

The City shall make all arrangements for and pay timely all costs of all utilities and services furnished to or used by it, which shall be, electricity, water, storm water, internet access, trash collection and sewer services. YMCA will pay gas utility for the purpose of heating the pool to a temperature of 84-86 degrees for all months except January and February.

Section 1.7 Additional Taxes

The parties acknowledge that as a YMCA Facility, YMCA presently enjoys a tax exempt status, however, to the extent the same may be applicable, YMCA shall pay all taxes, including any tax due on any rent payable under this Lease, all personal property taxes, all real property taxes, leasehold improvements and/or leasehold interest taxes, sales taxes which may be assessed against or arise by reason of YMCA'S leasing of the FACILITIES or its operation of the FACILITIES as a YMCA Facility.

Section 1.8 Financial Reports

a) During the term of this Lease, including the term of any extension or renewal, YMCA shall submit to CITY annual financial reports, audited by an independent certified public accountant, within ninety (90) days after final approval of the report by the YMCA Board of Directors.

b) The annual financial reports shall include a separate accounting of all revenues and expenditures relating to the FACILITIES and the City of Holly Hill YMCA. The City reserves the right to verify the accuracy of the representations contained in the annual financial reports and the YMCA will make its financial records available for inspection at the end of each quarter for review by the City or its designee.

ARTICLE II – USE AND OPERATION OF FACILITY

Section 2.1 YMCA Use

YMCA shall occupy and use the FACILITIES for a YMCA Facility and shall provide public family health and wellness programs that are typically provided by the YMCA. These programs shall inclu the following, or similar types of activities: chair yoga, yoga, Tia Chi Balance, Zuma, Boot Camp, aquatic programs, dance class, karate, indoor cycling.

The pool shall remain open twelve (10) months out of the year excluding the months of January and February. Pool schedule may be adjusted based on member usage. However, the pool must be open a minimum of 5 hours per day, every day the YMCA is open. If the pool does not remain open 5 hou er day, the city will deduct $150.00, each day it is not open, from the next quarterly payment.

The Pool Hours as of 10/4, will be Monday-Friday 7:00 am -12:00 pm.
Tuesday and Thursday the YMCA will host Water Aerobics at 5:30 pm
Saturday 9:00 am-2:00 pm

Attachment: YMCA Lease Agreement 2023-24 REDLINE (2023-R-53 : YMCA Lease Agreement Renewal)

Section 2.2 CITY Use ofFacilities

YMCA shall permit and allow CITY, without charge, to use the gym and pool facilities located on the FACILITIES, subject to the following conditions:

a) Use of said FACILITIES by CITY shall not exceed a total of **20** hours per calendar year.

b) Any hours CITY does not use said FACILITIES in one (1) calendar year shall not be carried forward to the next calendar year.

c) Dates and times for use of said FACILITIES by CITY shall be subject to mutual agreement between director of YMCA's Holly Hill branch and the City Manager.

Section 2.3 CITY Use of Parking Areas

The YMCA shall permit and allow CITY, without charge, to use the parking lots and other parking areas located on the FACILITIES for parking of vehicles during special events and activities conducted on any portion of adjacent CITY property, including, but not limited to, CITY hall, gymnasium, athletic fields, municipal complex and grounds.

Section 2.5 Compatibility

a) The YMCA agrees to operate, maintain and promote the operation and maintenance of the FACILITIES in a manner consistent with nationwide and local YMCA policies and practices.

b) The YMCA agrees that operation of the FACILITIES shall be in accordance with applicable CITY regulations. The YMCA further agrees to comply with reasonable requests of the CITY pertaining to the operation and promotion of the City of Holly Hill YMCA in order to provide for the safety of YMCA members and the public.

c) YMCA agrees that operation of the FACILITIES as a YMCA Facility will not unreasonably interfere with the use of the contiguous park area by members of the general public or by CITY. It is the parties' intention that the operation of the FACILITIES will be compatible with other CITY Recreation Programs.

d) The YMCA agrees that operation of the FACILITIES shall not interfere with the use of other CITY recreational facilities such as sports fields utilized by various team sports organizations.

e) The parties hereto agree to coordinate any special events and/or programs within their operations. YMCA agrees that it will not discriminate in its hiring or promotional practices.

f) The YMCA shall not duplicate youth sports offered at Hollyland Park or the 1200 Center Avenue location which may be offered by the CITY or another party.

Attachment: YMCA Lease Agreement 2023-24 REDLINE (2023-R-53 : YMCA Lease Agreement Renewal)

Section 2.6 Maintenance

It shall be the responsibility of YMCA to keep the premises clean, sanitary and free from trash and debris. The complete upkeep and maintenance shall be borne by YMCA and YMCA agrees to maintain the premises in accordance with the terms and conditions of this Lease and consistent with prudent and well-reasoned maintenance procedures and techniques. The CITY shall be responsible for all lawn and landscaping maintenance.

Section 2.7 Schedule of Operation

Holly Hill YMCA staff will determine the hours of operation of the Holly Hill YMCA. Prior to changing any facility hours the YMCA CEO will confer with the Holly Hill City Manager.

Section 2.8 Concessions

The YMCA may, but shall not be required to, dispense food and/or drink on the premises for consumption by users of the Facility.

Section 2.9 Fees

a) Holly Hill YMCA member and program fees will be set by the CFO in accordance with the appro of the Volusia Flagler YMCA Board of Directors
b) The YMCA will subsidize those who cannot afford full monthly membership rates at the current Y YOUR plan rates.
c) The YMCA will provide a daily fee option of $5.00 to Holly Hill residents that is inclusive of all r fee based activities.
d) There will be no YMCA administration overhead charged to the City of Holly Hill.

ARTICLE III - INSURANCE

Section 3.1 Insurance Requirements and Indemnification

YMCA shall fully indemnify and otherwise hold harmless CITY from any and all claims, demands or suits arising out of or otherwise attributable to YMCA or the occupancy of the FACILITIES by YMCA asserted by any party whatsoever, and this indemnity shall include all costs incurred by CITY, including reasonable defense attorney's fees. Without limiting any of the other obligations or liabilities of YMCA, YMCA shall provide, pay for, and maintain in force, throughout the term of this Lease, the insurance coverage set forth in this Article.

a) Workers' Compensation Insurance to apply for all employees in compliance with the "Workers Compensation Law" of the State of Florida and all applicable Federal laws. In addition, the policy(s) must include:

b) Employers' Liability with a limit of One Hundred Thousand Dollars ($100,000.00) each accident.

c) Comprehensive General Liability with minimum limits of One Million Dollars

Attachment: YMCA Lease Agreement 2023-24 REDLINE (2023-R-53 : YMCA Lease Agreement Renewal)

($1,000,000.00) per occurrence combined single limit for Bodily Injury Liability and Property Damage Liability. Coverage must be afforded on a form no more restrictive than the latest edition of the Comprehensive General Liability policy, without restrictive endorsements, as filed by the Insurance Services Office and must include:

i. Premises and/or Operations
11. Independent Contractors

d) Personal Injury Coverage with Employee and Contractual Exclusions removed with minimum limits of coverage equal to those required for Bodily Injury Liability and Property Damage Liability.

Section 3.2 Additional Insured

CITY shall be included as an "Additional Insured" in the name of "City of Holly Hill" with respect to liability arising out of operations performed for CITY by or on behalf of YMCA or acts or omissions of CITY in connection with general supervisions of such operations.

Section 3.3 Notification

The policy(s) must be endorsed to provide the City of Holly Hill with thirty (30) days' notice of cancellation and/or restriction.

ARTICLE IV - TERMINATION

Section 4.1 Termination by CITY

The occurrence of any of the following may cause this Lease to be terminated at the option of the CITY by notice to the YMCA.

a) Assignment by YMCA for the benefit of creditors.

b) Abandonment or discontinuation of operations at the FACILITIES consisting of three consecutive days during usual business hours and on such days as comparable facilities are open for business, unless such abandonment or discontinuation shall be due to causes beyond YMCA'S reasonable control such as, without limitation, acts of God, government laws or action, war, civil commotion, casualty, fire, storm, labor disputes or energy shortages, as long as operations commence immediately after the event causing the discontinuance ceases to exist.

c) The CITY shall have the right to terminate this Lease after thirty (30) days written notice by registered mail to YMCA, of the non-performance of any provisions of this Lease, unless the same shall have been corrected or remedial action started and diligently pursued within such period, to the reasonable satisfaction of the CITY.

Upon any termination pursuant to this Section, or if YMCA fails to exercise its option to renew, CITY shall have, in addition to any other remedies, the option to require that YMCA remove, at YMCA'S cost, all improvements made by YMCA to the FACILITIES. If the

Attachment: YMCA Lease Agreement 2023-24 REDLINE (2023-R-53 : YMCA Lease Agreement Renewal)

YMCA fails to remove the fixtures and personal property as requested by the City, said fixtures and personal property shall become the sole property of the CITY.

Section 4.2 Termination by YMCA

YMCA shall have the right upon thirty (30) days written notice, prior to the next scheduled quarterly payment to the CITY, to terminate this Lease at any time after the occurrence of one or more of the following events:

a) Issuance by any court of competent jurisdiction of any injunction substantially restricting the use of the facilities for its intended purposes, and the remaining in force of said injunction or period of more than thirty (30) calendar days.

b) A breach by the CITY of any of the terms, covenants or conditions contained in this Lease and the failure of the CITY to remedy such breach within thirty (30) days after receipt of written notice sent by registered mail from YMCA of the existence of such breach, unless the same shall have been corrected or remedial action started and diligently pursued within such period.

c) The assumption by the United States Government or any authorized agency thereof, or any other governmental agency, or the operation control or use of the facilities, or any substantial part, or parts, thereof in such a manner as substantially to restrict YMCA'S operations for a period of thirty (30) calendar days or more.

Section 4.3 Right to Remove Personal Property

At the termination of the Lease, either by expiration of the term or otherwise (except in the case of termination without cause by the YMCA), YMCA shall have the right to remove from the FACILITIES all its personal property and equipment used in the operation provided, however, that the CITY shall have a first and prior lien upon all such personal property to secure the payment to it of any and all sums due from YMCA.

Section 4.4 Termination Without Cause

a) CITY shall have the right to terminate this Lease upon 90days notice without cause and without penalty. Notwithstanding any provision hereof to the contrary, upon such termination, the YMCA shall have the option of removing equipment and furnishings provided by the YMCA as long as the YMCA repairs any damage sustained in the removal of said equipment and furnishings.

b) YMCA may terminate this Lease without cause upon providing CITY with 90days written notice. Upon such termination and as liquidated damages for the termination, YMCA agrees to convey to the CITY and leave in the FACILITIES all furnishings and equipment normally located thereon by YMCA.

ARTICLE V - MISCELLANEOUS

Section 5.1 Assignment

Attachment: YMCA Lease Agreement 2023-24 REDLINE (2023-R-53 : YMCA Lease Agreement Renewal)

a) Subject to the provisions of this Lease, YMCA shall not assign or encumber its interest in this Lease or in the FACILITIES, or allow any other person or entity (except YMCA'S authorized representatives) to occupy or use all or any part of the premises and the building and improvements located thereon, without first obtaining CITY'S written consent.

b) CITY shall not unreasonably withhold or delay its consent. However, any proposed assignee must have similar background and experience in the operation of a YMCA Facility, must operate the facility and provide substantially the same services on the FACILITIES as provided in this Lease and must have adequate financial resources.

c) Should YMCA assign or attempt to assign this Lease or sublet any portion of the FACILITIES without the prior written consent of the CITY, then this Lease shall be terminated forthwith, without prior notice to YMCA. No consent to any assignment or encumbrance shall constitute a waiver of the provisions of this Section.

Section 5.2 Risk of Loss

The YMCA agrees to assume all risks of loss by fire, water, weather or other unforeseen damages to or destruction of any property or stock placed on the premises by the CITY and to hold the CITY harmless from any responsibility or liability therefore.

Section 5.3 CITY'S Warranties - Quiet Enjoyment

a) CITY covenants and warrants that it has full right and lawful authority to enter into this Lease for the full telm hereof.

b) CITY covenants and agrees to and with YMCA that at all times when YMCA is not in default under the terms of and during the term of this Lease, YMCA'S quiet and peaceable enjoyment of the FACILITIES shall not be disturbed or interfered with by CITY or any person claiming by, through or under CITY.

Section 5.4 Approvals

It is understood by the parties to this Lease that where the approval of either of the parties is required by the Lease, such approval shall not be unreasonably withheld.

Section 5. 5 No waiver

Failure of either party to insist upon strict performance of any covenant or condition of this Lease, or to exercise any right herein contained, shall not be construed as a waiver or relinquishment for the future of any such covenant, condition or right; but the same shall remain in full force and effect. None of the conditions, covenants or provisions of this Lease shall be waived or modified except by the parties hereto in writing.

Section 5.6 Net Lease

Attachment: YMCA Lease Agreement 2023-24 REDLINE (2023-R-53 : YMCA Lease Agreement Renewal)

This Lease is, except to the extent otherwise provided herein, a net lease, and YMCA hereby assumes and agrees to pay and perform all payments, expenses, duties and obligations with relation to the FACILITIES, the improvements constructed upon the FACILITIES and appurtenances thereto, maintenance and operation thereof, whether such duties and obligations would otherwise be construed to be those of the CITY or YMCA, except as otherwise provided herein, so that no matter from what source arising, if anything shall be required to be done in, upon or about the FACILITIES, the improvements constructed upon the FACILITIES or appurtenances thereto, the same shall be done and fulfilled at the sole expense and responsibility of YMCA, without any expense, liability, or obligations whatsoever to or on the CITY, except for such obligations as are expressly assumed by the CITY herein.

Section 5.7 Independent Contractor

a) YMCA is an independent contractor under this Lease. Services provided by YMCA shall be by employees of YMCA and subject to the supervision by YMCA, and not as officers, employees or agents of the CITY.

b) Personnel policies, tax responsibilities, social security and health insurance, employee benefits, travel, per diem policies, purchasing policies and other similar administrative procedures applicable to services rendered by YMCA in the FACILITIES shall be those of YMCA.

c) Nothing contained in this Lease shall be deemed or construed by the Parties hereto or by any third party to create the relationship of principal and agent or of partnership or of joint venture or of any association whatsoever between the CITY and YMCA, it being expressly understood and agreed that neither the method of computation of rent nor any of the other provisions contained in this Lease nor any act or acts of the parties hereto shall be deemed to create any relationship between the CITY and YMCA other than the relationship of landlord and tenant.

Section 5.8 Entire Agreement

This Lease expresses the whole agreement between the parties, there being no representation, warranties or other understanding not hereto expressly set forth or provided for. No change or modification of or addition to this Lease shall be valid unless in writing and signed by parties hereto.

Section 5.9 Governing Law

This Lease shall be governed by and interpreted in accordance with the laws of the State of Florida. Venue for any litigation arising out of or related to this Lease shall be in State Court, Seventh Judicial Circuit, Volusia County, Florida and the parties specifically waive any Federal Court jurisdiction. The prevailing party in any litigation arising out of or related to this Lease shall be reimbursed reasonable attorneys' fees and costs, including costs of appeal.

Section 5.10 Damage to FACILITIES

If at any time during the term of this Lease the FACILITIES shall be lost or destroyed so

Attachment: YMCA Lease Agreement 2023-24 REDLINE (2023-R-53 : YMCA Lease Agreement Renewal)

as to be wholly or partially untenantable, CITY shall have the option of either restoring the FACILITIES or terminating this Lease, and shall exercise the option within the first sixty (60) days after the casualty.

Section 5.11 Holly Hill YMCA Advisory Board

The Corporate Board shall include one (1) non-elected representative from the City of Holly Hill. The FACILITY shall have a local board made up of 5-7 members of which one will serve on the Corporate Board.

Section 5.12 Website

YMCA will update their website to include more inclusive information about the Holly Hill facility

Section 5.13 Notices

All notices and other communications hereunder shall be in writing and shall be deemed to have been duly given if sent by Certified Mail, Return Receipt Requested, as follows:

TO YMCA:
President/CEO
Volusia Flagler YMCA,
Inc. 761 International
Speedway
DeLand, FL 32724

TO CITY:
City Manager
City of Holly Hill
1065 Ridgewood Avenue
Holly Hill, FL 32117

Attachment: YMCA Lease Agreement 2023-24 REDLINE (2023-R-53 : YMCA Lease Agreement Renewal)

IN WITNESS WHEREOF, the parties hereto have made and executed this Lease by and through their authorized representatives on the respective dates under each signature.

CITY OF HOLLY HILL, FLORIDA

By: _____
Joseph A. Forte, City Manager

ATTEST:_____
Valerie Manning, City Clerk

VOLUSIA / FLAGLER YOUNG MENS CHRISTIAN ASSOCIATION, INC.

By: _____

Chris Seilkop, President/CEO

Attachment: YMCA Lease Agreement 2023-24 REDLINE (2023-R-53 : YMCA Lease Agreement Renewal)

HOLLY HILL
FLORIDA

STAFF REPORT
CITY OF HOLLY HILL, FLORIDA

City Commission
Resolution

MEETING DATE: **September 26, 2023**
FROM: **Antoine Khoury**
SUBJECT: **A Resolution of the City Commission of the City of Holly Hill, Florida, Approving the Piggyback of the City of Clermont, Fl (Agreement No.2023-071), for Sanitary Sewer Manhole, Vault, and Lift Station Rehabilitation with Danus Utilities, Inc., Establishing an Annual Cost Not to Exceed $75,000 and Authorizing the City Manager to Execute the Same; Providing for Severability; and Providing for an Effective Date.**
NUMBER: **2023-R-54**
APPLICANT:
PLANNER:

DISCUSSION:

The City of Holly Hill maintains wastewater collection and treatment to protect the health and well-being of the community. The system includes a sanitary collection system with over 1,000 manholes and 30 lift stations to transfer sewage to a state permitted 3 million gallon wastewater treatment plant. Many of the manholes and lift stations are approaching 60 years old. Some manholes and lift stations have been repaired or rehabilitated. Others will need to be repaired or rehabilitated to maintain reliable service as they age. The City utility maintains an annual maintenance budget and plans capital rehabilitation project to maintain the infrastructure in optimum condition and help prevent malfunction and potential spills.

Danus Utilities, Inc., has a new Master Agreement with the City of Clermont, Florida for sanitary sewer manhole, vault, and lift station rehabilitation services. The comprehensive contract includes pricing for many of the common rehabilitation items required to maintain the Holly Hill sewer collections system. The City of Clermont agreement was approved on August 22, 2023 with the affiliated contract and cost structure included under 'Exhibit A'.

Danus is a dependable central Florida local specialty sewer contractor who has successfully performed many repairs and rehabilitation improvements for the City of Holly Hill. The Danus agreement with the City of Clermont is for one (1) year with three (3) additional one-year term renewal options. The City piggy-back of the contract would be a valuable tool for the utility to expedite routine and emergency remedial activities using the agreement's competitive rate structure without timely delays of obtaining three quotes or developing small projects bids.

Policy 2.39 of the City's Purchasing Policy states "The City may utilize (piggy-back) any other government entity's open contracts that have been competitively bid and awarded to the low responsive, responsible bidder meeting specifications, in accordance with City Purchasing

regulations The City may also piggy-back off U.S. General Services Administration, "GSA Contracts". When another entity's contract is to be utilized, a copy of that contract shall be forwarded to the Finance Department for review and evaluation to determine if it meets the City's requirement regarding competitive bidding and award."

Staff recommend that the City Commission approve the piggy-back of the City of Clermont's agreement with Danus Utilities, Inc., Contract # 2023-071 and approve annual allocations not to exceed $75,000.00 or the limits as adopted by the annual budget and authorize the City Manager to execute the same.

FISCAL ANALYSIS:

No expenditures are being requested at this time. However, staff recommend that beginning in fiscal year 2023- 2024, $75,000 is set aside in general ledger account 400-3020-535-4601 as a not to exceed cost related to sewer manhole, vault and lift station repairs to be made by Danus Utilities. An adequate amount of funding has been requested as part of the fiscal year 2023-2024 budget.

STAFF RECOMMENDATION:

Approve the piggy-back with the City of Clermont agreement (No. 2023-071), for sanitary sewer manhole, vault, and lift station rehabilitation services as needed from Danus Utilities, Inc., establish an annual cost not to exceed $75,000 and authorize the City Manager to execute the same.

COMMISSION GOAL:

Goal #1: Develop and maintain a sound and sustainable financial plan for the city that establishes sufficient reserves for all funds, ensures (whenever possible) that user fees pay for services rendered, provides a realistic capital improvement program, and encourages public/private sector partnerships and intergovernmental partnerships.

Goal #4: Provide proficient public health and safety services in terms of police and fire protection, water, storm water, waste water and solid waste management and disaster preparedness with a focus on intergovernmental collaboration, private sector partnerships, and utilization of technologies and proven innovations.

MOTION:

APPROVE THE PIGGY-BACK OF THE CITY OF CLERMONT (AGREEMENT NO. 2023-071) FOR SANITARY SEWER MANHOLE, VAULT, AND LIFT STATION REHABILITATION WITH DANUS UTILITIES, INC., ESTABLISH AN ANNUAL

COST NOT TO EXCEED $75,000 FOR THE TERM OF THE CONTRACT WITH THREE (3) OPTIONAL ONE YEAR RENEWALS AS APPROVED BY THE CITY MANAGER AND AUTHORIZE THE CITY MANAGER TO EXECUTE THE SAME.

ATTACHMENTS:

- Exhibit A - City of Clerment Agreement 2023-071 (PDF)

Resolution No. 2023-54

A RESOLUTION OF THE CITY COMMISSION OF THE CITY OF HOLLY HILL, FLORIDA, APPROVING THE PIGGYBACK OF THE CITY OF CLERMONT, FL (AGREEMENT NO.2023-071), FOR SANITARY SEWER MANHOLE, VAULT, AND LIFT STATION REHABILITATION WITH DANUS UTILITIES, INC., ESTABLISHING AN ANNUAL COST NOT TO EXCEED $75,000 AND AUTHORIZING THE CITY MANAGER TO EXECUTE THE SAME; PROVIDING FOR SEVERABILITY; AND PROVIDING FOR AN EFFECTIVE DATE.

A RESOLUTION OF THE CITY COMMISSION OF THE CITY OF HOLLY HILL, FLORIDA, APPROVING THE PIGGYBACK OF THE CITY OF CLERMONT, FL (AGREEMENT NO.2023-071), FOR SANITARY SEWER MANHOLE, VAULT, AND LIFT STATION REHABILITATION WITH DANUS UTILITIES, INC., ESTABLISHING AN ANNUAL COST NOT TO EXCEED $75,000 AND AUTHORIZING THE CITY MANAGER TO EXECUTE THE SAME; AND PROVIDING FOR AN EFFECTIVE DATE.

WHEREAS, the City utility system requires assistance with contract septic sewer pumping services to provide for preventative maintenance, planned outages and emergencies to ensure uninterrupted services to the community and spill remediation; and

WHEREAS, Danus Utilities, Inc. has an active Agreement (No. 2023-071) with the City of Clermont, FL for the sanitary sewer manhole, vault, and lift station rehabilitation services which the City of Holly Hill may piggyback; and

WHEREAS, adequate funds are available within the sewer operating budget to pay for the purchase of services in an amount not to exceed $75,000 annually.

NOW, THEREFORE, BE IT RESOLVED BY THE CITY COMMISSION OF THE CITY OF HOLLY HILL, FLORIDA:

SECTION 1. That the City Commission of the City of Holly Hill approve the piggybacking of the City of Clermont, FL Agreement (ITB# 08-23) with Danus Utilities, Inc.

SECTION 2. That the City Commission of the City of Holly Hill approve as needed service for purchase of sanitary sewer manhole, vault, and lift station rehabilitation services from Danus Utilities, Inc., in an amount not to exceed $75,000 annually, and authorize the City Manager to execute the same.

SECTION 4. SEVERABILITY. If any section or portion of a section of this Resolution proves to be invalid, unlawful, or unconstitutional, it shall not be held to invalidate or impair the validity, force, or effect of any other section or part of this Resolution.

SECTION 3. That this Resolution shall take effect immediately upon its adoption.

APPROVED AND AUTHENTICATED on this 26th day of SEPTEMBER, 2023.

AGREEMENT No. 2023-071

SANITARY SEWER MANHOLE, VAULT, AND LIFT STATION REHABILITATION

THIS AGREEMENT, is made and entered into this, August 22, 2023, by and between the CITY OF CLERMONT, FLORIDA, a municipal corporation under the laws of the State of Florida whose address is: 685 W. Montrose Street, Clermont, Florida, (hereinafter referred to as "CITY"), and DANUS UTILITIES, INC, whose address is: 2320 Beardall Ave., Sanford, FL 32771, (hereinafter referred to as "CONTRACTOR").

WHEREAS, the City of Clermont issued RFB 23-085 titled Sanitary Sewer Manhole, Vault, and Lift Station Rehabilitation;

WHEREAS, CONTRACTOR submitted its response dated July 6, 2023, to RFB 23-085;

WHEREAS, CITY desired to award a contract to CONTRACTOR in accordance with the terms and conditions of RFB 23-085 and CONTRACTOR's response thereto;

WITNESSETH: That the parties hereto, for the consideration hereinafter set forth, mutually agree as follows:

1. SCOPE OF WORK

The CONTRACTOR shall furnish provide sewer manhole, vault, and lift station rehabilitation as described in CITY's RFB 23-085 and CONTRACTOR's July 6, 2023 response thereto, which are expressly incorporated herein and made a part of the Agreement Documents hereto and shall do everything required by this Agreement and the Agreement Documents. Provided, however, that nothing herein shall require CITY to purchase or acquire any items or services from CONTRACTOR.

2. THE CONTRACT SUM

CITY shall pay CONTRACTOR, for the faithful performance of the Agreement as set forth in the Agreement Documents and the Unit Price Schedule an amount in accordance with the compensation schedule set forth in Exhibit "A", attached hereto and incorporated herein.

3. PROVISION OF SERVICES AND COMPLETION OF WORK

A. The CONTRACTOR shall only provide the CITY with sewer manhole, vault, and lift station rehabilitation upon receipt of an authorized order from CITY and shall provide the requested items in the timeframe and as set forth in RFB 23-085 or in the specific purchase order submitted by CITY. Nothing herein shall obligate CITY to purchase any specific amount of product from CONTRACTOR or create an exclusive purchase agreement between CITY and CONTRACTOR. CITY shall not be obligated or required to pay for any items received until such time as CITY has accepted the items in accordance with the order provided to CONTRACTOR.

Attachment: Exhibit A - City of Clerment Agreement 2023-071 (2023-R-54 : Sanitary Sewer Manhole, Vault, and Lift Station Rehabilitation)

DocuSign Envelope ID: 422E3C33-5760-434C-BBCA-B9EFE5843EF4

B. CONTRACTOR, upon receipt of a purchase order hereunder, shall immediately notify CITY if it has an issue or question related to the fulfillment of the order or whether there will be any delay in providing the items requested. Failure of CONTRACTOR to so notify CITY will preclude CONTRACTOR from seeking payment of any kind for any items that were delayed in delivery. Upon receipt of notification of the delay, CITY may at its sole option cancel the order and seek the items from any available source.

C. It is expressly understood and agreed that the passing, approval, and/or acceptance of any services herein by CITY or by any agent or representative as in compliance with the terms of this Contract shall not operate as a waiver by the CITY of strict compliance with the terms of this Contract and the CITY may require the CONTRACTOR replace the accepted services so as to comply with the warranties and specifications hereof.

D. COMPANY specifically acknowledges that this Contract does not bind or obligate CITY to purchase any minimum quantity of product during the term hereof.

4. TERM AND TERMINATION

A. This Agreement is to become effective upon execution by both parties and shall remain in effect for a period of three (3) years thereafter, unless terminated or renewed as provided for herein.

B. Notwithstanding any other provision of this Agreement, CITY may, upon written notice to CONTRACTOR, terminate this Agreement: a) without cause and for CITY's convenience upon thirty (30) days written notice to CONTRACTOR; b) if CONTRACTOR is adjudged to be bankrupt; c) if CONTRACTOR makes a general assignment for the benefit of its creditors; d) CONTRACTOR fails to comply with any of the conditions of provisions of this Agreement; or e) CONTRACTOR is experiencing a labor dispute, which threatens to have a substantial, adverse impact upon the performance of this Agreement, without prejudice to any other right or remedy CITY may have under this Agreement. In the event of such termination, CITY shall be liable only for the payment of all unpaid charges, determined in accordance with the provisions of this Agreement, for work, properly performed and accepted prior to the effective date of termination.

C. Upon mutual Agreement of the parties, this Agreement may be renewed for three (3) additional one-year terms. Sixty (60) days prior to completion of each extended term of this Agreement, CONTRACTOR may request and the City may consider an adjustment to price based on changes in the Producer Price Index (PPI).

Attachment: Exhibit A - City of Clerment Agreement 2023-071 (2023-R-54 : Sanitary Sewer Manhole, Vault, and Lift Station Rehabilitation)

DocuSign Envelope ID: 422E3C33-5760-434C-BBCA-B9EFE5843EF4

5. PAYMENTS

In accordance with the provisions fully set forth in the Contract Documents, CONTRACTOR shall submit an invoice to CITY upon completion of the services and delivery of products to CITY as set forth in the applicable purchase order. CITY shall make payment to the CONTRACTOR for all accepted deliveries and undisputed products delivered and services provided, within thirty (30) calendar days of receipt of the invoice.

6. DISPUTE RESOLUTION - MEDIATION

A. Any claim, dispute or other matter in question arising out of or related to this Agreement shall be subject to mediation as a condition precedent to voluntary arbitration or the institution of legal or equitable proceedings by either party.

B. The CITY and CONTRACTOR shall endeavor to resolve claims, disputes and other matters in question between them by mediation.

C. The parties shall share the mediator's fee and any filing fees equally. The mediation shall be held in Clermont, Lake County, Florida, unless another location is mutually agreed upon. Agreements reached in mediation shall be enforceable as settlement Agreements in any court having jurisdiction thereof.

7. INSURANCE AND INDEMNIFICATION RIDER

7.1. Worker's Compensation Insurance

The CONTRACTOR shall take out and maintain during the life of this Agreement, Worker's Compensation Insurance for all its employees connected with the work of this Project and, in case any work is sublet, the CONTRACTOR shall require the subCONTRACTOR similarly to provide Worker's Compensation Insurance for all of the subCONTRACTOR employees unless such employees are covered by the protection afforded by the CONTRACTOR. Such insurance shall comply with the Florida Worker's Compensation Law. In case any class of employees engaged in hazardous work under this Agreement at the site of the Project is not protected under the Worker's Compensation statute, the CONTRACTOR shall provide adequate insurance, satisfactory to the CITY, for the protection of employees not otherwise protected.

7.2. CONTRACTOR's Commercial General Liability Insurance

The CONTRACTOR shall take out and maintain during the life of this Agreement, Commercial General Liability and Business Automobile Liability Insurance as shall protect it from claims for damage for personal injury, including accidental death, as well as claims for property damages which may arise from operating under this Agreement whether such operations are by itself or by anyone directly or indirectly employed by it, and the amount of such insurance shall be as follows:

A. CONTRACTOR's Commercial General Liability, $1,000,000 Each, ($1,000,000 aggregate). Liability Coverages, Bodily Injury Occurrence, & Property Damage Combined Single Limit

Attachment: Exhibit A - City of Clerment Agreement 2023-071 (2023-R-54 : Sanitary Sewer Manhole, Vault, and Lift Station Rehabilitation)

DocuSign Envelope ID: 422E3C33-5760-434C-BBCA-B9EFE5843EF4

B. Automobile Liability Coverages, $1,000,000 Each, Bodily Injury & Property Damage Occurrence, Combined Single Limit

Insurance clause for both BODILY INJURY AND PROPERTY DAMAGE shall be amended to provide coverage on an occurrence basis.

7.3. CITY's and CONTRACTOR's Protective Liability Insurance

The CITY shall procure and furnish a CITY's and CONTRACTOR's Protective Liability Insurance Policy with the following minimum limits:

A. Bodily Injury Liability & $1,000,000 Each ($2,000,000 aggregate) Property Damage Liability Occurrence Combined Single Limit.

7.4. Indemnification Rider

A. To the fullest extent permitted by law, the CONTRACTOR shall indemnify and hold harmless the CITY and its employees from and against all claims, damages, losses and expenses, including but not limited to reasonable attorney's fees, arising out of or resulting from its performance of the Work, provided that any such claim, damage, loss or expense (1) is attributable to bodily injury, sickness, disease or death, or to injury to or destruction of tangible property (other than the Work itself) , and (2) is caused in whole or in part by any negligent act or omission of the CONTRACTOR, any subcontractor, anyone directly or indirectly employed by any of them or anyone for whose acts any of them may be liable, regardless of whether or not such acts are caused in part by a party indemnified hereunder. Such obligation shall not be construed to negate, abridge, or otherwise reduce any other right to obligation of indemnity which would otherwise exist as to any party or person described in this Article; however, this indemnification does not include the sole acts of negligence, damage or losses caused by the CITY and its other contractors.

B. In any and all claims against the CITY or any of its agents or employees by any employee of the CONTRACTOR, any subcontractor, anyone directly or indirectly employed by any of them or anyone for whose acts any of them may be liable, the indemnification obligations under this Paragraph shall not be limited in any way by any limitation on the amount or type of damages, compensation or benefits payable by or for the CONTRACTOR or any subcontractor under workers' or workmen's compensation acts, disability benefit acts or other employee benefit acts.

C. The CONTRACTOR hereby acknowledges receipt of ten dollars and other good and valuable consideration from the CITY for the indemnification provided herein.

Attachment: Exhibit A - City of Clerment Agreement 2023-071 (2023-R-54 : Sanitary Sewer Manhole, Vault, and Lift Station Rehabilitation)

DocuSign Envelope ID: 422E3C33-5760-434C-BBCA-B9EFE5843EF4

8. NOTICES

All notices shall be in writing and sent by United States mail, certified or registered, with return receipt requested and postage prepaid, or by nationally recognized overnight courier service to the address of the party set forth below. Any such notice shall be deemed given when received by the party to whom it is intended.

A. **CONTRACTOR:**

Danus Utilities, Inc.

Attn: Daniel J Pardus, President

2320 Beardall Ave., Sanford, FL 32771

A. **OWNER:**

City of Clermont

Attn: Brian Bulthuis, City Manager

685 W. Montrose Street, Clermont, FL 34711

9. MISCELLANEOUS

9.1. Attorneys' Fees

In the event a suit or action is instituted to enforce or interpret any provision of this Agreement, the prevailing party shall be entitled to recover such sum as the Court may adjudge reasonable as attorneys' fees at trial or on any appeal, in addition to all other sums provided by law.

9.2. Waiver

The waiver by city of breach of any provision of this Agreement shall not be construed or operate as a waiver of any subsequent breach of such provision or of such provision itself and shall in no way affect the enforcement of any other provisions of this Agreement.

9.3. Severability

If any provision of this Agreement or the application thereof to any person or circumstance is to any extent invalid or unenforceable, such provision, or part thereof, shall be deleted or modified in such a manner as to make the Agreement valid and enforceable under applicable law, the remainder of this Agreement and the application of such a provision to other persons or circumstances shall be unaffected, and this Agreement shall be valid and enforceable to the fullest extent permitted by applicable law.

9.4. Amendment

Except for as otherwise provided herein, this Agreement may not be modified or amended except by an Agreement in writing signed by both parties.

Attachment: Exhibit A - City of Clerment Agreement 2023-071 (2023-R-54 : Sanitary Sewer Manhole, Vault, and Lift Station Rehabilitation)

DocuSign Envelope ID: 422E3C33-5760-434C-BBCA-B9EFE5843EF4

9.5. Entire Agreement

This Agreement including the documents incorporated by reference contains the entire understanding of the parties hereto and supersedes all prior and contemporaneous Agreements between the parties with respect to the performance of services by CONTRACTOR.

9.6. Assignment

Except in the event of a merger, consolidation, or other change of control pursuant to the sale of all or substantially all of either party's assets, this Agreement is personal to the parties hereto and may not be assigned by CONTRACTOR, in whole or in part, without the prior written consent of city.

9.7. Venue

The parties agree that the sole and exclusive venue for any cause of action arising out of this Agreement shall be Lake County, Florida.

9.8. Applicable Law

This Agreement and any amendments hereto are executed and delivered in the State of Florida and shall be governed, interpreted, construed and enforced in accordance with the laws of the State of Florida.

9.9. Public Records

The CONTRACTOR expressly understands records associated with this project are public records and agrees to comply with Florida's Public Records law, to include, to:

A. Keep and maintain public records that ordinarily and necessarily would be required by the CITY in order to perform the services contemplated herein.

B. Provide the public with access to public records on the same terms and conditions that the CITY would provide the records and at a cost that does not exceed the cost provided in this Florida's Public Records law or as otherwise provided by law.

C. Ensure that public records that are exempt or confidential and exempt from public records disclosure requirements are not disclosed except as authorized by law.

D. Meet all requirements for retaining public records and transfer, at no cost, to the CITY all public records in possession of CONTRACTOR upon the termination of the contract and destroy any duplicate public records that are exempt or confidential and exempt from public records disclosure requirements. CONTRACTOR shall use reasonable efforts to provide all records stored electronically to the CITY in a format that is compatible with the information technology systems of the CITY.

E. IF THE CONTRACTOR HAS QUESTIONS REGARDING THE APPLICATION OF CHAPTER 119, FLORIDA STATUTES, TO THE CONTRACTOR'S DUTY TO PROVIDE PUBLIC RECORDS RELATING TO THIS CONTRACT, THE

Attachment: Exhibit A - City of Clerment Agreement 2023-071 (2023-R-54 : Sanitary Sewer Manhole, Vault, and Lift Station Rehabilitation)

CONTRACTOR SHALL CONTACT THE CITY'S CUSTODIAN OF PUBLIC RECORDS AT THE CITY CLERK'S OFFICE, (352) 241-7331.

10. CONTRACT DOCUMENTS

The Contract Documents, as listed below are herein made fully a part of this Contract as if herein repeated.

Document Precedence:

A. This Agreement

B. Purchase Order / Notice To Proceed

C. An applicable Contractor Quote or Statement of Work

D. All documents contained in RFB 23-085 titled Sanitary Sewer Manhole, Vault, and Lift Station Rehabilitation and CONTRACTOR's response thereto.

IN WITNESS WHEREOF, the parties hereto have executed this Agreement on this 23rd day of August, 2023.

CITY OF CLERMONT

DocuSigned by:
2BA7692F758C492...

Tim Murry, Mayor

ATTEST:

DocuSigned by:
Tracy Ackroyd Howe
3AD7F34905B344A...

DS

Tracy Ackroyd Howe, City Clerk

Attachment: Exhibit A - City of Clerment Agreement 2023-071 (2023-R-54 : Sanitary Sewer Manhole, Vault, and Lift Station Rehabilitation)

DANUS UTILITIES, INC.

By: DocuSigned by: Daniel J Pardus 1A04B643441C4D9...

Print Name: Daniel J Pardus

Title: President

Date: 8/24/2023

Attachment: Exhibit A - City of Clerment Agreement 2023-071 (2023-R-54 : Sanitary Sewer Manhole, Vault, and Lift Station Rehabilitation)

DocuSign Envelope ID: 422E3C33-5760-434C-BBCA-B9EFE5843EF4

Exhibit A

GROUP 1 PRICING (MANHOLE AND/OR VAULT REHABILITATION

Danus Utilities, Inc.

Line Item	Description	Quantity	UOM	Unit Cost	Total
1	Cementitious lining of Brick Manhole – 48 in. Diameter	50	VF	$ 270.00	$ 13,500.00
2	Cementitious lining of Pre-cast Manhole – 48 in. Diameter	250	VF	$ 240.00	$ 60,000.00
3	Cementitious lining of Brick Manhole – 60 in. Diameter	40	VF	$ 300.00	$ 12,000.00
4	Cementitious lining of Pre-cast Manhole – 60 in. Diameter	25	VF	$ 270.00	$ 6,750.00
5	Adjust Existing Manhole Casting within Asphalt Pavement	1	EA	$ 1,325.00	$ 1,325.00
6	Adjust Existing Manhole Casting within Green Area	10	EA	$ 925.00	$ 9,250.00
7	Furnish New Ring and Cover USF 170 (SANITARY)	1	EA	$ 425.00	$ 425.00
8	Re-Construct Manhole Bench and Flow Channel	2	EA	$ 750.00	$ 1,500.00
	Total				$ 104,750.00

GROUP 2 PRICING (LIFSTATION REHABILITATION)

Danus Utilities, Inc.

Line Item	Description	Quantity	UOM	Unit Cost	Total
9	Lift Station Surface Rehabilitation by Cementitious Lining.	100	SF	$ 32.00	$ 3,200.00
10.a	Bypass 8 in. Sewer Setup	9	EA	$ 750.00	$ 6,750.00
10.b	Bypass 10 in. to 12 in. Sewer Setup	4	EA	$ 900.00	$ 3,600.00
10.c	Bypass 15 in. to 18 in. Sewer Setup	4	EA	$ 1,000.00	$ 4,000.00
10.d	Sewer Bypass 4 in. Pump	25	Per Day	$ 610.00	$ 15,250.00
10.e	Sewer Bypass 6 in. Pump	10	Per Day	$ 1,000.00	$ 10,000.00
10.f	Sewer Bypass 8 in. Pump	10	Per Day	$ 1,350.00	$ 13,500.00
11.a	Furnish and Install Pump Base – 4 in. (inclusive of pump brackets)	10	EA	$ 3,125.00	$ 31,250.00
11.b	Furnish and Install Pump Base – 6 in. (inclusive of pump brackets)	4	EA	$ 3,750.00	$ 15,000.00
11.c	Furnish and Install Pump Base – 8 in. (inclusive of pump brackets)	4	EA	$ 7,600.00	$ 30,400.00
12.a	Re-Construct Lift Station Fillet – 6 ft. Diameter	5	EA	$ 800.00	$ 4,000.00
12.b	Re-Construct Lift Station Fillet – 8 ft. Diameter	2	EA	$ 850.00	$ 1,700.00
12.c	Re-Construct Lift Station Fillet – 10 ft. Diameter	2	EA	$ 900.00	$ 1,800.00
12.d	Re-Construct Lift Station Fillet – 12 ft. Diameter	2	EA	$ 950.00	$ 1,900.00
13	Removal of Existing Coating	200	SF	$ 10.00	$ 2,000.00
14.a	Remove and Replace Existing Piping and Valves within Existing Submersible Lift Station through Existing Valve Vault – 4 in. (price per each riser)	10	EA	$ 15,270.00	$ 152,700.00

DocuSign Envelope ID: 422E3C33-5760-434C-BBCA-B9EFE5843EF4

14.b.	Remove and Replace Existing Piping and Valves within Existing Submersible Lift Station through Existing Valve Vault – 6 in. (price per each riser)	4	EA	$ 19,050.00	$ 76,200.00
14.c	Remove and Replace Existing Piping and Valves within Existing Submersible Lift Station through Existing Valve Vault – 8 in. (price per each riser)	4	EA	$ 28,150.00	$ 112,600.00
14.d	Remove and Replace Existing Piping and Valves within Existing Submersible Lift Station through Existing Valve Vault – 10 in. (price per each riser)	4	EA	$ 37,495.00	$ 149,980.00
14.e	Remove and Replace Existing Piping and Valves within Existing Submersible Lift Station through Existing Valve Vault – 12 in. (price per each riser)	4	EA	$ 45,920.00	$ 183,680.00
15.a	Furnish and Install 6 ft. top slab with 36in. x 48in. hatch with Safety Grate	5	EA	$ 8,865.00	$ 44,325.00
15.b	Furnish and Install 8 ft. top slab with 36in. x 48in. hatch with Safety Grate (Coal Tar Epoxy Coating)	2	EA	$ 10,930.00	$ 21,860.00
16.a	Furnish and install 5 ft. x 5 ft. valve box with 48in. x 48in. Hatch (Coal Tar	5	EA	$ 16,460.00	$ 82,300.00
16.b	Furnish and install 6 ft. x 6 ft. valve box with 48in. x 48in. Hatch (Coal Tar	2	EA	$ 17,890.00	$ 35,780.00
17.a	Temporary Bypass Riser – 4 in.	5	EA	$ 4,485.00	$ 22,425.00
17.b	Temporary Bypass Riser – 6 in.	2	EA	$ 5,710.00	$ 11,420.00
17.c	Temporary Bypass Riser – 8 in.	2	EA	$ 8,375.00	$ 16,750.00
18.a	2 in. SS Dual Guide rails with brackets – 10 ft. to 15 ft. (Price Per Pump)	10	EA	$ 1,972.00	$ 19,720.00
18.b	2 in. SS Dual Guide rails with brackets – 15 ft. to 20 ft. (Price Per Pump)	5	EA	$ 2,012.00	$ 10,060.00
19.a	3 in. SS Dual Guide rails with brackets – 10 ft. to 15 ft. (Price Per Pump)	5	EA	$ 2,812.00	$ 14,060.00
19.b	3 in. SS Dual Guide rails with brackets – 15 ft. to 20 ft. (Price Per Pump)	5	EA	$ 3,012.00	$ 15,060.00
20	Furnish and Install 3 in. Drain	5	EA	$ 600.00	$ 3,000.00
21	Furnish and Install SCH-80 PVC Vent – 4 in.	5	EA	$ 550.00	$ 2,750.00
22.a	Drain and Clean Wet Well – 6 ft.	5	EA	$ 1,700.00	$ 8,500.00
22.b	Drain and Clean Wet Well – 8 ft.	2	EA	$ 1,837.00	$ 3,674.00
22.c	Drain and Clean Wet Well – 10 ft.	3	EA	$ 2,075.00	$ 6,225.00
22.d	Drain and Clean Wet Well – 12 ft.	3	EA	$ 2,212.00	$ 6,636.00
23.a.i	Connect Lift Station Piping to Existing Force Main – 4 in. (Include Line Stop and Plug Valve) PVC Force Main	5	EA	$ 14,450.00	$ 72,250.00
23.a.ii	Connect Lift Station Piping to Existing Force Main – 4 in. (Include Line Stop and Plug Valve) Ductile Force Main	5	EA	$ 15,400.00	$ 77,000.00
23.b.i	Connect Lift Station Piping to Existing Force Main – 6 in. (Include Line Stop and Plug Valve) PVC Force Main	2	EA	$ 14,760.00	$ 29,520.00

23.b.ii	Connect Lift Station Piping to Existing Force Main – 6 in. (Include Line Stop and Plug Valve) Ductile Force Main	2	EA	$ 15,400.00	$	30,800.00
23.c.i	Connect Lift Station Piping to Existing Force Main – 8 in. (Include Line Stop and Plug Valve) PVC Force Main	2	EA	$ 17,755.00	$	35,510.00
23.c.ii	Connect Lift Station Piping to Existing Force Main – 8 in. (Include Line Stop and Plug Valve) Ductile Force Main	2	EA	$ 18,410.00	$	36,820.00
23.d.i	Connect Lift Station Piping to Existing Force Main – 10 in. (Include Line Stop and Plug Valve) PVC Force Main	2	EA	$ 22,525.00	$	45,050.00
23.d.ii	Connect Lift Station Piping to Existing Force Main – 10 in. (Include Line Stop and Plug Valve) Ductile Force Main	2	EA	$ 23,050.00	$	46,100.00
23.e.i	Connect Lift Station Piping to Existing Force Main – 12 in. (Include Line Stop and Plug Valve) PVC Force Main	2	EA	$ 26,320.00	$	52,640.00
23.e.ii	Connect Lift Station Piping to Existing Force Main – 12 in. (Include Line Stop and Plug Valve) Ductile Force Main	2	EA	$ 26,965.00	$	53,930.00
24.a	Removal, Furnish and Installation of HDPE Riser Pipe, Bracket, Base Ell and Base Plate in Place of Ductile Iron Riser and Fitting on Line Item 14.a – 4 in. (This price will be either added if more or subtracted if less from original	2	EA	$ 15,200.00	$	30,400.00
24.b	Removal, Furnish and Installation of HDPE Riser Pipe, Bracket, Base Ell, and Base Plate in Place of Ductile Iron Riser and Fitting on Line Item 14.b – 6 in. (This price will be either added if more or subtracted if less from original	3	EA	$ 18,725.00	$	56,175.00
24.c	Removal, Furnish and Installation of HDPE Riser Pipe, Bracket, Base Ell, and Base Plate in Place of Ductile Iron Riser and Fitting on Line Item 14.c – 8 in. (This price will be either added if more or subtracted if less from original	3	EA	$ 27,100.00	$	81,300.00
24.d	Removal, Furnish and Installation of HDPE Riser Pipe, Bracket, Base Ell, and Base Plate in Place of Ductile Iron Riser and Fitting on Line Item 14.d – 10 in. (This price will be either added if more or subtracted if less from original	3	EA	$ 36,375.00	$	109,125.00
24.e	Removal, Furnish and Installation of HDPE Riser Pipe, Bracket, Base Ell, and Base Plate in Place of Ductile Iron Riser and Fitting on Line Item 14.e – 12 in. (This price will be either added if more or subtracted if less from original	3	EA	$ 44,400.00	$	133,200.00
25.a	Removal, Furnish, & Installation of Existing Potable water Piping and PRV Valve within Existing and through Existing Valve Vault – 6 in.	1	EA	$ 9,400.00	$	9,400.00
25.b	Removal, Furnish, & Installation of Existing Potable water Piping and PRV Valve within Existing and through Existing Valve Vault – 8 in.	1	EA	$ 12,875.00	$	12,875.00

DocuSign Envelope ID: 422E3C33-5760-434C-BBCA-B9EFE5843EF4

25.c	Removal, Furnish, & Installation of Existing Potable water Piping and PRV Valve within Existing and through Existing Valve Vault – 10 in.	1	EA	$ 17,825.00	$ 17,825.00
25.d	Removal, Furnish, & Installation of Existing Potable water Piping and PRV Valve within Existing and through Existing Valve Vault – 12 in.	1	EA	$ 24,475.00	$ 24,475.00
26.a	2-in. Line Stop Stainless Steel	1	EA	$ 9,650.00	$ 9,650.00
26.b	4-in. Line Stop Stainless Steel	1	EA	$ 10,950.00	$ 10,950.00
26.c	6-in. Line Stop Stainless Steel	1	EA	$ 11,500.00	$ 11,500.00
26.d	8-in. Line Stop Stainless Steel	1	EA	$ 12,375.00	$ 12,375.00
26.e	10-in. Line Stop Stainless Steel	1	EA	$ 13,410.00	$ 13,410.00
26.f	12-in. Line Stop Stainless Steel	1	EA	$ 15,725.00	$ 15,725.00
26.g	14-in. Line Stop Stainless Steel	1	EA	$ 19,100.00	$ 19,100.00
26.h	16-in. Line Stop Stainless Steel	1	EA	$ 22,190.00	$ 22,190.00
26.i	20-in. Line Stop Stainless Steel	1	EA	$ 25,270.00	$ 25,270.00
	Total				$ 2,238,620.00

3. SCOPE OF WORK

3.1. Part 1: General

A. Summary:

1. These specifications shall govern all labor, material, equipment, and appliances necessary for sanitary sewer manhole and lift station rehabilitation for the purpose of eliminating infiltration and inflow, providing corrosion protection, repair of cracks and voids, and restoration of the structural integrity of the manhole/ lift stations as a result of the application of a monolithic fiber-reinforced structural/structurally enhanced pure calcium aluminate cementitious liner to the wall, ceiling, and bench surfaces of concrete, brick or any other masonry construction material. Including lift station piping rehabilitation as detailed in the specifications.

B. Submittals:

1. Submit the manufacturer's material data and application and installation instructions for all products used for approval prior to use.
2. Provide documentation that the proposed manhole/lift station rehabilitation process has a minimum three (3) year history/experience for the reconstruction of sanitary sewer manholes and lift stations on projects of similar size and scope (SEE PART 4, MINIMUM QUALIFICATIONS AND REQUIREMENTS).

C. Quality Assurance

1. Use, mix, apply, and cure all products in accordance with the manufacturer's recommendations and instructions.
2. Install all products in accordance with the manufacturer's recommendations and instructions.

3.2. Part 2: Products

A. Materials

1. Patching Mix:
   a. A quick-setting, fiber-reinforced, calcium aluminate-based cementitious material for patching and filling voids and cracks.
2. Infiltration Control Mix:
   a. A rapid-setting cementitious product specifically formulated for infiltration control.
3. Grouting Mix:
   a. A rapid-setting cementitious grout specifically formulated to stop active infiltration and fill voids.

Attachment: Exhibit A - City of Clerment Agreement 2023-071 (2023-R-54 : Sanitary Sewer Manhole, Vault, and Lift Station Rehabilitation)

b. A rapid-setting chemical grout specifically formulated for stopping very active infiltration.

4. Liner Mix:

   a. A fiber-reinforced pure-fused calcium aluminate cement and calcium aluminate aggregate to be wet mixed and low pressured spray applied to form the structural/structurally enhanced monolithic cementitious liner covering all interior manhole surfaces. Liner material to be SewperCoat, Strong Seal, Parson CA Liner + Cement Plus, Maximum CA + Cement or approved equivalent material by the City prior to installation.

   b. Materials must be pre-mixed and specially formulated to withstand H2S (hydrogen sulfide) bacterial corrosion and abrasion in sewer networks.

   c. **The products mentioned above must be accompanied by a certified letter from the manufacturer and a letter from the contractor for a 10-year warranty.**

5. Bonding Compound:

   a. Material must be modified cementitious bonding compound that protects exposed reinforcement steel and enhances the bond of overlay to the substrate.

6. Water:

   a. The water must be clean and potable and will be provided by the City at designated fill stations.

3.3. Part 3: Execution

A. Preparation

1. Place covers over sewer inverts to prevent extraneous material from entering the sewer lines.

2. Remove foreign, loose, and unsound concrete and masonry material not able to be removed by high-pressure water spray may require the use of masons or mechanical tools for removal.

3. Clean the interior surfaces of the manhole/lift station with high-pressure (3,500 psi minimum) water spray, using detergent, muriatic acid, antibacterial agent, or other chemicals to remove grease, oil, and other contaminants that would prevent a good bond between the existing manhole interior surface and the liner material.

4. Active hydrostatic leaks (infiltration) shall be stopped using the rapid-setting specially formulated infiltration control mix.

5. Very active hydrostatic leaks (infiltration) shall be stopped using one of the rapid-setting grouting mixes specially formulated for control of very active infiltration.

Attachment: Exhibit A - City of Clerment Agreement 2023-071 (2023-R-54 : Sanitary Sewer Manhole, Vault, and Lift Station Rehabilitation)

6. Clean and prepare exposed reinforcement steel, and apply and cure bonding compound, in accordance with the product manufacturer's instructions and recommendations.
7. Prepare cracks and voids to be patched and filled, and apply and cure patching mix, in accordance with the product manufacturer's instructions and recommendations.
8. Areas of the manhole/lift station that are found to be structurally damaged and in need of repair beyond the scope of this specification must be brought to the attention of the City's Project Manager. A suitable repair method must be developed for each area and submitted to the City's Project Manager for review prior to commencing the repair.
9. Prepare, clean, and repair manhole/lift station benches and inverts in the same manner as prescribed above.

B. Liner Application, Curing, and Testing

1. Prepare manhole/lift station surfaces, wet batch-mix liner materials low-pressure spray, apply liner mix to the manhole ceiling, wall, and bench surfaces, and allow the liner to cure in accordance with the product manufacturer's instructions and recommendations.
2. Liner application must be 1/2-inch for manholes and 1-inch for wet wells minimum thickness. The application must be completed with a minimum of two coats. The first coat must be applied at a thickness adequate to cover the substrate and be trowled to compact the material into voids and set the bond. The second coat must be applied to ensure complete coverage at the specified thickness.
3. Inverts must be lined with the patching mix, and trowel applied in one coat to a 1-inch minimum thickness.
4. Prepare, label, and submit recommended daily or per lot test specimens for testing.

C. Cleaning

1. Clean manhole/lift station interiors and remove all construction-related materials, equipment, and appliances from the manhole/lift station prior to reinstatement to service.

D. Lift Station Rehabilitation

1. By-pass pumps must be sound attenuated and meet the minimum flow requirements for each station. The system must have a second pump tied in and ready in case the primary pump fails. The system must be monitored 24 hours a day by a remote dialer and contractor personnel. The successful respondent is responsible for emergency calls day and night while it is on by-pass pumps. The bypass system must be tested to ensure proper operation. The City must witness the testing and sign off prior to starting rehabilitation.

Attachment: Exhibit A - City of Clerment Agreement 2023-071 (2023-R-54 : Sanitary Sewer Manhole, Vault, and Lift Station Rehabilitation)

2. Temporary pump-out riser will need to be installed first and may be left as the emergency pump out. The City will help determine the best location for both parties. The riser must consist of a flanged P-401 spool coming up above grade, flanged P-401 90, MJ P-401 Tee, two MJ gate valves with valve boxes, and all necessary restraint devices. A flanged aluminum male cam-lock and dust cap with a 6-inch flanged ¼ turn plug valve should be installed on the elbow after the job is completed.
3. The successful respondent is responsible for the removal of pumps, pipes, and valves. The City will disconnect the pump leads, remove the floats, and transducer. The pumps are to be given to the City after removal. All other materials are to be hauled and disposed of by the successful respondent.
4. Installation of base elbows must be as per manufacturers' specifications. The bases must be Flygt dual rail design. Existing pumps will need the top bolt-on guide rail bracket. Guide rails must be 3-inch stainless steel with a stainless guide rail bracket. Any modification to the existing floor or fillet for proper installation must be included in the pricing.
5. Ductile Iron pipe and fittings shall be P-401 lined. All flanged connections shall have 316 stainless steel nuts & bolts. The use of an anti-seizing compound is required on all bolts.
6. Valves inside the valve box must be Mueller, American, Clow, Dezurik, or Pratt. Check valves must be flanged L/W type with rubber disc seal. Plug valves must be flanged ¼ turn direct nut with 80% opening.
7. Pressure gauges must be installed on each discharge pipe downstream of the plug valve. The 1/2-inch tap can be directly into the ductile iron pipe. Stainless steel nipples and ball valves shall be used to make the connection. Gauges shall be 4-1/2 inch SS liquid filled with diaphragm.
8. Vent cap must be all SCH-80 PVC fittings. Use 4-inch elbows and Vanstone flanges with a SS screen between them.
9. Use a 12-foot average riser length for line item 14.a, 14.b, 14.c and alternate price for line item 1.a, 1.b, 1.c, in the Price Schedule of this RFB.

E. Alternate Bid

1. HDPE SDR-11 IPS pipe riser must be factory butt fused. The riser must have a flange adapter with SS backup ring, 90 elbow, and enough pipe to go through the wall to the restrained coupling between the wet well and valve box. The height may be adjusted with one fusion coupling. The use of a SS stiffener is required at the MJ connection.
2. A 316 stainless steel base plate must be used. Plates shall be at least 12" x 12" x ½"-thick (base plate to be used with HDPE only).

Attachment: Exhibit A - City of Clerment Agreement 2023-071 (2023-R-54 : Sanitary Sewer Manhole, Vault, and Lift Station Rehabilitation)

3. Pipe bracing is required every 8-feet minimum. The first must be within 6-inches of the top elbow. The bracing must be 316 stainless steel, going from wall to wall behind the risers with a stainless steel U-bolt holding the riser to the brace. All nuts shall be vinyl locking stainless steel.

3.4. Part 4: Minimum Qualifications and Requirements

A. The installer **MUST** have been engaged in the installation of Manhole and Lift Station System Rehabilitation Contracting Services for a minimum of 3 years and have rehabilitated a minimum of 500 sanitary sewer manholes and 15 lift stations, in the State of Florida, utilizing a system that offers pure fused Calcium Aluminate.

B. The installer **MUST** include in their response a list of 10 references, for which manhole, lift station, or wet well rehabilitation contracting services have been provided within the last 3 years. The reference list must include the name of the company, contact person, telephone number, project duration, contract value, and the number of manholes/lift stations for each reference.

C. The successful respondent will be responsible for knowledge of and compliance with all relatively local, state, and federal codes and regulations.

D. For all work performed, the successful respondent must provide a competent job-site supervisor and any necessary assistants, all approved by the City's Project Manager. The job-site supervisor must be present at all times while work is in progress. The job-site supervisor will represent the successful respondent at all times while all directions given will be binding as per the contract documents. The job-site supervisor must have a minimum of 5 years of experience in the rehabilitation of Sanitary Sewer Manholes, Lift Stations, and Wet Wells utilizing a product that consists of a pure fused Calcium Aluminate Cementitious Liner.

E. **Failure to provide the minimum qualifications and requirements described in this section with the bid response result in the bid being declared non-responsive.**

3.5. Part 5: Measurement and Payment

A. Payments to the successful respondent will be made on the basis of the unit price in the Price Schedule as full and complete payment for furnishing all materials, labor, tools, and equipment, and for performing all operations necessary to complete the rehabilitation work of sewer manholes, lift stations, and wet wells by various trenchless methods as authorized by the City. The City will establish an annual renewable contract for these services with the successful bidders as described in this solicitation.

B. The unit price from the Price Schedule must include all costs and expenses for taxes, labor, equipment, materials, commissions, transportation charges & expenses, patent fees & royalties, labor for handling materials during the inspection, together with any and all other costs and expenses for performing and completing the work as shown on the details and specified herein. The Basis of Payment for an item at the price shown in the

Attachment: Exhibit A - City of Clerment Agreement 2023-071 (2023-R-54 : Sanitary Sewer Manhole, Vault, and Lift Station Rehabilitation)

Price Schedule will be in accordance with its description of the item and as related to the work specified. Unit prices will be applied to the actual quantities furnished and installed.

1. The successful respondent's attention is called to the fact that the quotations for the various items of work are intended to establish a total price for completing the work in its entirety. Should the successful respondent feel that the cost for any item of work has not been established in the Price Schedule, the cost for that work will be included in some other applicable item, so that the price for the item reflects the total price for completing the work in its entirety.

C. No separate payment will be made for the following work if required and its cost must be included in appropriate payment items:

   a. Applications and pulling of all utility and construction permits;

   b. Dewatering and disposal of surplus water;

   c. Structural repairs;

   d. Cleanup;

   e. Testing materials and apparatus;

   f. Maintenance of utility service;

   g. Appurtenant work;

   h. Inspection Photo Records;

   i. Maintenance of Traffic

D. The following section will clarify the work included for the items listed in the Price Schedule.

Measurement

A. Payment will be determined by actual measurement of the completed items, in place, ready for service, and accepted by the City's Project Manager unless otherwise specified. The City's Project Manager must witness all field measurements.

B. When depths are indicated in the line item, they must be measured vertically from the existing grade, paved or unpaved, to the pipe invert.

C. It is intended that all work required for completion must be included in the various line items as described in the following paragraphs.

   1. CEMENTITIOUS LINING MANHOLE, BRICK, OR PRECAST REHABILITATION (1/2" thick minimum in manholes)

      a. This item of work will be measured and paid for at the unit price per vertical foot of 48-inch or 60-inch diameter of the manhole wall named in the Pricing Section. Measurement must be made from the bench, at its highest point, to the upper

Attachment: Exhibit A - City of Clerment Agreement 2023-071 (2023-R-54 : Sanitary Sewer Manhole, Vault, and Lift Station Rehabilitation)

limit of the actually treated wall, cone, or chimney. Payment of the unit price per vertical foot will provide complete compensation for cleaning of the wall by both pressurized water and sand or soda blasting; relief of hydrostatic pressure outside the manhole, if necessary; injecting chemical grout to stop active leaks into the manhole, if necessary; furnishing and supplying of all materials or combination of materials making up the patching and coating (waterproofing) and applying or installing them; manufacturer's representative's presence or assistance, if required; isolation of the manhole by plugging entering lines; testing; safety equipment; and all incidentals necessary to obtain a watertight, sealed manhole wall and bench, compete in place.

b. The successful respondent will be responsible for the new coating that is applied only and not the existing coating.

c. Payment for bypass pumping, if required (other than because of damage caused by Contractor); will be paid for under a separate item.

2. CEMENTITIOUS LINING OF LIFT STATION/WET WELL SURFACES (1" thick minimum in wet wells)

a. This item of work will be measured and paid at the unit price per square foot of wall in a lift station or wet well. Measurement will be made on the actual surface area repaired. Payment of the unit price per square foot will provide compensation for cleaning of the wall by both pressurized water and sand or soda media blasting methods; relief of hydrostatic pressure outside the structure if necessary; injecting chemical grout to stop active infiltration, if necessary; cleaning; surface preparation as specified herein; furnishing and supplying of all materials or combination of materials, including liner manufacture's representative's presence or assistance, if required; isolation of the lift station or wet well by plugging entering lines; testing; safety equipment for personnel; labor, tools and equipment; and all incidentals necessary to obtain a watertight, sealed wall and bench, compete in place.

b. The successful respondent will be responsible for the new coating that is applied only and not the existing coating.

3. BYPASS PUMPING OF SEWERS

a. BYPASS PUMP AND PIPING SETUP

i. These pay items provide complete compensation for bypass pumping operations required for sewer manhole, lift station, and wet well rehabilitation. The successful respondent must attempt to perform the rehabilitation sewer work without bypass pumping. However, if in the opinion of the City, bypass pumping is necessary, it will be identified as a payment item. The pay item is a one-time charge for all bypass pumping setup operations during a given lining installation, including services, regardless of the number of pumps

Attachment: Exhibit A - City of Clerment Agreement 2023-071 (2023-R-54 : Sanitary Sewer Manhole, Vault, and Lift Station Rehabilitation)

required. Bypass pumping must be bid on the basis of the sewer size which is bypassed.

ii. These items must include, but are not limited to all necessary and required traffic control; pumps; piping; gasoline/diesel fuel; maintenance; transportation and storage; temporary bypass and service piping; labor; materials and/or any other costs associated with bypass pumping.

iii. Plugging or blocking a sewer line must be included in the appropriate bid item for which the flow must be stopped, this is considered incidental work and no additional payment shall be considered.

b. BYPASS PUMP

i. These items will be paid for on a per-day basis for the operation of the bypass pumps. Bypass pump operation will be on the basis of the size of the pump used. These items must include fuel operating costs.

4. ADJUSTING EXISTING MANHOLE CASTINGS

a. These pay items provide complete compensation for furnishing all necessary labor, equipment, and materials to adjust existing manholes to match existing elevations.

5. FURNISH NEW MANHOLE RING AND COVER

a. This pay item provides complete compensation for furnishing new manhole rings and covers as specified by the City.

6. RECONSTRUCT A COMPLETE BENCH AND FLOW CHANNEL

a. This pay item provides complete compensation for furnishing all necessary labor, equipment, and materials required to re-construct a complete bench and flow channel, as required per the City's minimum standards.

7. INSTALLATION OF CHIMNEY SEALS

a. These pay items provide complete compensation for furnishing all necessary labor, equipment, and material required to install manhole chimney seals.

8. REMOVAL OF EXISTING COATINGS

a. These pay items provide complete compensation for furnishing all necessary labor, equipment, and materials necessary to remove any existing coatings that may exist in full or any portion of an existing structure.

9. REMOVE AND REPLACE EXISTING PIPING AND VALVES

a. These pay items provide complete compensation for furnishing all necessary labor, equipment, and materials necessary to remove and replace all existing piping, check valves, plug valves, and all miscellaneous materials required for

Attachment: Exhibit A - City of Clerment Agreement 2023-071 (2023-R-54 : Sanitary Sewer Manhole, Vault, and Lift Station Rehabilitation)

this installation. This work will start at existing pump bases and will terminate prior to where discharge piping exits the existing valve vault. All work must comply with the City of Clermont minimum standards.

Attachment: Exhibit A - City of Clerment Agreement 2023-071 (2023-R-54 : Sanitary Sewer Manhole, Vault, and Lift Station Rehabilitation)

City of Clermont
Procurement Services Department
685 W. Montrose Street
Clermont, FL 34711

VENDOR INFORMATION

The following information along with a current W-9 form must be provided to the Procurement Services Department for all new vendors and when current vendors remit information changes.

Name of Individual or Business: Danus Utilities, Inc.

Contact Person and Title: Daniel J Pardus - President

Vendor Street Address: 2320 Beardall Ave

Vendor City, State, ZIP: Sanford, FL 32771

Vendor Mailing Address (if different from above): PO Box 291671, Port Orange, FL 32129

Vendor Email Address: robert@danusutilities.com

Vendor Email Address for Purchase Order (if different from above):

Phone Number: 386-804-0068 Fax Number: 407-878-1254

Taxpayer Identification Number (include a copy of your W9 form): 27-0404772

Remit to Information (if different from above):

Payment Remit to Name:

Payment Remit to Address:

Payment Remit to City, State, ZIP:

Please return the completed Vendor Information along with the required W-9 form by email to: procurementservices@clermontfl.org

For any questions, please call the Procurement Services Department at (352) 241-7350.

Attachment: Exhibit A - City of Clerment Agreement 2023-071 (2023-R-54 : Sanitary Sewer Manhole, Vault, and Lift Station Rehabilitation)

HOLLY HILL
FLORIDA

STAFF REPORT
CITY OF HOLLY HILL, FLORIDA

City Commission
Resolution

MEETING DATE: **September 26, 2023**
FROM: **Antoine Khoury**
SUBJECT: **A Resolution of the City Commission of the City of Holly Hill, Florida, Authorizing the City Manager to Enter into an Agreement with Parker Mynchenberg & Associates, Inc., to Provide Professional Consultant Services to Extend the Sewer Force Main Further West Across Nova Road at 10Th Street in an Amount Not to Exceed $47,700.00; Providing for Severability; and Providing for an Effective Date.**
NUMBER: **2023-R-46**
APPLICANT:
PLANNER:

DISCUSSION:

The City desires to extend the sewer force main at 10th Street further west across Nova Road. The approximate 1,500 LF of HDPE force main will be for proposed development in the County that will have a private lift station and pump sewer to the City of Holly Hill for treatment and disposal. The proposed zoning of the subject parcel will allow for up to 134 new residential units.

The scope of services from Parker Mynchenberg & Associates, Inc. is included under 'Exhibit A' and includes the design phase, subconsultant allowance, permitting assistance, surveyor assistance, plan preparations, soil testing, environmental reports, various testing, and construction phase services.

FISCAL ANALYSIS:

The City entered into a Professional Consultant Services Agreement for Engineering/CEI Services with Parker Mynchenberg & Associates, Inc., on January 25, 2022 for a term of three (5) years with (2) (1) year renewal options.

Funding for this project in the amount of $47,700.00 for the professional consultant services has been budgeted in account number 407-8110-580-6300 and Project Code 23-WW-02. Florida State Legislative action has awarded the city funding to complete the extension of sewer services across Nova Road in the amount of $1,360,000.

STAFF RECOMMENDATION:

Authorize the City Manager to enter into an agreement with Parker Mynchenberg & Associates,

Inc., to provide professional consultant services to facilitate the extension of the sewer force main further west of Nova Road at 10th Street.

COMMISSION GOALS:

Goal #1: Develop and maintain a sound and sustainable financial plan for the city that establishes sufficient reserves for all funds, ensures (whenever possible) that user fees pay for services rendered, provides a realistic capital improvement program, and encourages public/private sector partnerships and intergovernmental partnerships.

Goal #4: Provide proficient public health and safety services in terms of police and fire protection, water, storm water, waste water and solid waste management and disaster preparedness with a focus on intergovernmental collaboration, private sector partnerships, and utilization of technologies and proven innovations.

MOTION:

APPROVE AUTHORIZING THE CITY MANAGER TO ENTER INTO AN AGREEMENT WITH PARKER MYNCHENBERG & ASSOCIATES, INC., TO PROVIDE PROFESSIONAL CONSULTANT SERVICES TO EXTEND THE SEWER FORCE FURTHER WEST ACROSS NOVA ROAD AT 10TH STREET IN AN AMOUNT NOT TO EXCEED $47,700.00.

ATTACHMENTS:

- Exhibit A - Engineering Proposal (PDF)
- Holly Hill Appro Highlited (PDF)

HISTORY:

09/11/23 City Commission PULLED BY CITY MANAGER
Next: 09/26/23

Pulled by Mr. Forte and will be rescheduled for a future meeting.

Resolution No. 2023-46

A RESOLUTION OF THE CITY COMMISSION OF THE CITY OF HOLLY HILL, FLORIDA, AUTHORIZING THE CITY MANAGER TO ENTER INTO AN AGREEMENT WITH PARKER MYNCHENBERG & ASSOCIATES, INC., TO PROVIDE PROFESSIONAL CONSULTANT SERVICES TO EXTEND THE SEWER FORCE MAIN FURTHER WEST ACROSS NOVA ROAD AT 10TH STREET IN AN AMOUNT NOT TO EXCEED $47,700.00; PROVIDING FOR SEVERABILITY; AND PROVIDING FOR AN EFFECTIVE DATE.

A RESOLUTION OF THE CITY COMMISSION OF THE CITY OF HOLLY HILL, FLORIDA, AUTHORIZING THE CITY MANAGER TO ENTER INTO AN AGREEMENT WITH PARKER MYNCHENBERG & ASSOCIATES, INC., TO PROVIDE PROFESSIONAL CONSULTANT SERVICES TO EXTEND THE SEWER FORCE MAIN FURTHER WEST ACROSS NOVA ROAD AT 10TH STREET IN AN AMOUNT NOT TO EXCEED $47,700.00; PROVIDING FOR SEVERABILITY; AND PROVIDING FOR AN EFFECTIVE DATE.

WHEREAS, the City desires to extend the sewer force main at 10th Street further west across Nova Road; and

WHEREAS, Parker Mynchenberg & Associates, Inc., has provided a scope of services; and

WHEREAS, the City entered into a Professional Consultant Services Agreement for Engineering/CEI Services with Parker Mynchenberg & Associates, Inc., on January 25, 2022.

NOW, THEREFORE, BE IT RESOLVED BY THE CITY COMMISSION OF THE CITY OF HOLLY HILL, FLORIDA:

SECTION 1. That the City Commission of the City of Holly Hill does hereby authorize the City Manager to enter into an agreement with Parker Mynchenberg & Associates, Inc., to provide professional services for the sewer force main extension west across Nova Road at 10th Street at an amount not to exceed $47,000.00.

SECTION 2. If any section or portion of a section of this Resolution proves to be invalid, unlawful, or unconstitutional, it shall not be held to invalidate or impair the validity, force, or effect of any other section or part of this Resolution.

SECTION 3. This Resolution shall take effect immediately upon its adoption.

APPROVED AND AUTHENTICATED on this 26th day of SEPTEMBER, 2023.

PARKER MYNCHENBERG & ASSOCIATES, INC.

1729 Ridgewood Avenue
Holly Hill, Florida 32117
(386) 677-6891
FAX (386) 677-2114
E-Mail: info@parkermynchenberg.com

Attachment: Exhibit A - Engineering Proposal (2023-R-46 : Professional Services for Sewer Main Extenstion Across Nova Rd at 10Th St)

July 6, 2023

Mr. Antoine Khoury
City Engineer/Public Works Director
City of Holly Hill
453 LPGA Blvd.
Holly Hill, FL 32117

Via email: akhoury@hollyhillfl.org

Re: CITY OF HOLLY HILL – 10TH STREET SEWER EXTENSION
Professional Engineering Services Proposal

Dear Mr. Khoury:

We are pleased to offer the Professional Engineering proposal for the 10th Street Sewer Extension. The project includes extending a force main further west across Nova Rd. This is approximately 1,500 LF of HDPE force main installed by directional drill. The sewer service will be for proposed development in the County that will have a private lift station and pump sewer to the City of Holly Holl for treatment and disposal. The proposed zoning of the subject parcel will allow for up to 134 new residential units.

The design services will include an evaluation of the capacity at Lift Station No. 17 to determine if any upgrades are needed for the additional flow. If improvements are required, the design and permitting is not included within this project.

This Professional Services Proposal includes design, and permitting services.

The Scope of Work is as follows:

PART A – DESIGN PHASE

1. Coordinate with Owner
2. Coordinate with the following Consultants:
    a. Surveyor
    b. Geotechnical Engineer
3. Evaluate force main size and LS 17 capacity
4. Prepare construction plans and specifications
5. Submit plans and specifications to the City for review at 60% and 90% completion
6. Incorporate City review comments into the bid documents
7. Apply for FDEP Wastewater Permit
8. Apply for Volusia County R/W Use Permit
9. Apply for FDOT Utility Permit

PART B – SUBCONSULTANTS

1. Subconsultant allowance for Surveyor and Electrical Engineer. Subconsultant cost will be billed at actual cost plus 5%.

PART C – MISCELLANEOUS

1. Expenses (including reproducibles, mileage, postage, etc.)

Not included in the above Scope of Work are as follows:

1. Permit application and fees (to be borne by the Owner).
2. Boundary, topographic, jurisdictional wetland, and tree survey (by a registered land surveyor).
3. Preparation of Easement Sketch and Legal Descriptions (if required).
4. Wetland Jurisdictional determination/flagging (including but not limited to vegetation mapping, on-site endangered or

protected species inventory and environmental permitting associated with site plan approval, stormwater and dredge and fill permitting (mitigation plan) (if required) (PMA to provide environmental ACOE consultant, dredge and fill exhibit only). Obtaining the Army Corp of Engineer's Permit for wetlands impacts is the sole responsibility of the environmental consultant. PMA will assist with exhibits etc. However, the wetland jurisdiction impacts, mitigation plan, and obtaining the permit are NOT included in PMA's scope of work.

5. Preparation of Architectural Building Plans and Elevations. (to be prepared by Project Architect).
6. Preparation of Signage Plans (to be provided by architect or sign company).
7. Geotechnical Soil Testing (to be performed by a Geotechnical Engineer) (if required).
8. Cultural Assessment Survey and Report in response to the Division of Historical Resources (if required).
9. Preparation and assistance associated with LEED design certification.
10. Title Opinion.
11. Traffic Studies (to be prepared by Traffic Engineer) (if required).
12. Preparation of Environmental Reports (if required by the County/SJRWMD).
13. Comprehensive Plan, Rezoning Amendments and Future Land Use Modification (if required).
14. Preparation of Structural Permit Applications.
15. Preparation of Colored Renderings.
16. Preparation of a Lighting Plan including Photometric Plan and Lift Station Electrical Service and Electrical Design. (to be prepared by an Electrical Engineer).
17. Gopher Tortoise Survey or Permitting Relocation.
18. Preparation of an Endangered and Threatened Species Report.
19. Onsite Construction supervision.
20. Electrical Service or Distribution Design (by Electrical Engineer).
21. Attendance at Public Hearings, including Neighborhood Meetings, Planning Board, Redevelopment Board and City Commission Meetings unless specially included in the Scope of Work.
22. Coordination of Telephone, Gas, Cable, and Power (PMA to provide plans only to private utilities).
23. Traffic Fair Share Agreement.
24. Sanitary Pump Station Design and Permitting (if required).
25. As-Built of civil, landscaping and irrigation improvements (to be prepared by a registered land surveyor or sub-contractor as part of their contract).
26. Required bacteriological testing in conjunction with water main clearance (if required).
27. Bidding
28. Construction Phase Services
29. FDEP NPDES Notice of Intent (NOI) Permit (To be applied and obtained by the Contractor through the FDEP. PMA will assist but obtaining the NOI is NOT included in PMA's Scope of Work.)

Attachment: Exhibit A - Engineering Proposal (2023-R-46 : Professional Services for Sewer Main Extenstion Across Nova Rd at 10Th St)

I anticipate the Professional Engineering Fee associated with the above Scope of Work not to exceed the following:

PART A – DESIGN PHASE:	**$**	**31,000.00**
PART B – SUBCONSULTANTS:	**$**	**15,700.00**
PART C – MISCELLANEOUS:	**$**	**1,000.00**
TOTAL:	**$**	**47,700.00**

FORTY-SEVEN THOUSAND SEVEN HUNDRED DOLLARS AND 00/100

Please note that miscellaneous expenses such as reproducibles, mileage, postage, etc. are estimated and included in the above Scope of Work. Billing will be monthly, based on the ***Hourly Rate Schedule*** included with this proposal.

After reviewing this proposal, if it meets with your approval, please execute the ***Professional Service Agreement*** and return to me as the Notice to Proceed. Please feel free to call with any questions you may have concerning this proposal or the project in general.

Thank you for considering Parker Mynchenberg & Associates, Inc. for your Professional Engineering needs.

Yours truly,

Parker Mynchenberg, P.E., R.L.A.

Attachment: Exhibit A - Engineering Proposal (2023-R-46 : Professional Services for Sewer Main Extenstion Across Nova Rd at 10Th St)

PROFESSIONAL SERVICES AGREEMENT

CLIENT HEREBY REQUESTS THE PERFORMANCE OF THE SERVICES IDENTIFIED IN THE DETAILED SCOPE OF WORK.

FEE BASIS

☒ Schedule of Hourly Rates Attached
☒ Miscellaneous Expenses
☒ Lump Sum Not to Exceed Fee

PAYMENT BASIS

☒ Monthly
☐ At time of Completion
☐ Retainer Required: $ N/A

LIABILITY LIMITATION

To the maximum extent permitted by law, the Client agrees to limit the Design Professional's liability for the Client's damages to the sum of $1,000,000. or the Design Professional's fee, whichever is greater. This limitation shall apply regardless of the cause of action or legal theory pled or asserted.

SERVICE CHARGE

On all amounts not paid within 30 days from date of invoice, a service charge will be made of 1.5% per month (18% per annum). This service charge shall be applied to the total outstanding balance due.

VENUE and COST OF LITIGATION

On all amounts not paid within 30 days from the date of invoice, the Client shall be responsible for all collection costs, including but not limited to Attorney's fees. In the event of a fee dispute, venue of any litigation to resolve said dispute shall be in Volusia County, Florida. Reasonable attorney's fees and costs shall be assessed for the prevailing party against the losing party in any litigation pertaining to collection fees or costs accrued, as a result of the representation outlined by the proposal.

Work shall commence upon execution of the Professional Services Agreement.

FOR: PARKER MYNCHENBERG & ASSOCIATES, INC.

BY: _____
Parker Mynchenberg, President

DATE: 07/06/2023

FOR: THE CLIENT

BY: _____

TITLE: _____

DATE: _____

Attachment: Exhibit A - Engineering Proposal (2023-R-46 : Professional Services for Sewer Main Extenstion Across Nova Rd at 10Th St)

HOURLY RATE SCHEDULE

Principal Engineer	$300.00/hour
Senior Project Engineer	$250.00/hour
Landscape Architect	$250.00/hour
Project Engineer	$175.00/hour
Senior CAD Technician	$150.00/hour
CAD Technician	$130.00/hour
Administrative	$ 55.00/hour

STANDARD RATE FOR MISCELLANEOUS EXPENSES

PRINTS

24”x36”	$2.00/ea.
30”x42”	$3.00/ea.
36”x48”	$4.00/ea.
42”x60”	$6.00/ea.

REPRODUCIBLES

Mylar	$20.00/ea.

COPIES

8.5”x11”	$0.25/ea.
8.5”x14”	$0.35/ea.
11”x17”	$0.40/ea.
Color	$1.50/ea.

OTHER

Mileage	$0.75/mile
Postage	Current Rate
Phone Calls	As Billed

Attachment: Exhibit A - Engineering Proposal (2023-R-46 : Professional Services for Sewer Main Extenstion Across Nova Rd at 10Th St)

Mr. Antoine Khoury
City of Holly Hill
10th Street Sewer Extension
July 6, 2023

FEE MATRIX

Task	Description	$ 250 Principal Engineer (PE)	$ 175 Senior Project Engineer (PE)	$ 150 Senior CAD Technician	$ 55 Clerical	Man Hours	Cost	Total
PART A – DESIGN PHASE								
1)	Coordinate with Owner	**4**	**4**	**-**	**4**	12.0	$1,920.00	
2)	Coordinate with Consultants	**2**	**4**	**8**	**2**	16.0	$2,510.00	
3)	Evaluate Force Main Size and LS 17 Capacity	**-**	**6**	**-**	**2**	8.0	$1,160.00	
4)	Prepare Construction Plans and Specifications							
	60% Plans and Specifications	**4**	**12**	**32**	**2**	50.0	$8,010.00	
	90% Plans and Specifications	**2**	**8**	**16**	**4**	30.0	$4,520.00	
	100% Plans and Specifications	**2**	**4**	**8**	**4**	18.0	$2,620.00	
5)	Submit Plans for Review	**2**	**8**	**8**	**4**	22.0	$3,320.00	
6)	FDEP Wastewater Permit	**-**	**4**	**4**	**4**	12.0	$1,520.00	
7)	Volusia County R/W Use Permit	**-**	**8**	**8**	**2**	18.0	$2,710.00	
8)	FDOT Utility Permit	**-**	**8**	**8**	**2**	18.0	$2,710.00	**$31,000.00**
PART D - SUBCONSULTANTS								
1)	Survey Allowance	**-**	**-**	**-**	**-**	0.0	$12,200.00	
2)	Geotechnical Engineering Allowance	**-**	**-**	**-**	**-**	0.0	$3,500.00	**$15,700.00**
PART E - MISCELLANEOUS								
1)	Expenses (including reproducibles, mileage, postage, etc.)	**-**	**-**	**-**	**-**	0.0	$1,000.00	**$1,000.00**
		16	66	92	30	204		
		$4,000.00	$11,550.00	$13,800.00	$1,650.00		$47,700.00	**$47,700.00**
							$47,700.00	

Attachment: Exhibit A - Engineering Proposal (2023-R-46 : Professional Services for Sewer Main

~~1941) (HF 1104)..... 100,000~~
~~Delray Beach Public Seawall Improvement (SF 1943) (HF 1217)..... 1,000,000~~
~~Deltona - Theresa Basin - Flood Control Study (SF 2651) (HF 1116)..... 600,000~~
Deltona Eastern Wastewater Treatment Facility Expansion - Sewer Improvement/Water Quality (SF 1878) (HF 1760)..... 2,000,000
Deltona Fisher Wastewater Treatment Facility Plant Conversion (SF 1879) (HF 1759)..... 1,000,000
Doral Stormwater Improvements (SF 2813) (HF 1893)..... 500,000
Dunedin - WWTP Ocean Outfall Pipe Rehabilitation (SF 1703) (HF 0868)..... 400,000
Dunnellon Moose Family Center Lodge 2308 Septic to Sewer (HF 1291)..... 30,000
Eckerd College Resilience Action Plan (SF 2489) (HF 1647). 352,945
Englewood Water District South Water Reclamation Facility Electrical Upgrade Project (SF 2046) (HF 0673)..... 1,500,000
Escambia County - Gulf Beach Highway Drainage Outfall at Sunset \ Patton \ Elite \ Winthrop (SF 1463) (HF 0727).. 440,000
Estero River Heights & Cranbrook Harbor Utility Expansion Project (SF 3072) (HF 0657)..... 7,400,000
~~Fernandina Beach Historic Downtown Resiliency Seawall Construction Project (SF 2233) (HF 1336)..... 1,000,000~~
~~Florida City Sewer Improvements (SF 1682) (HF 0917)..... 1,120,000~~
Florida Governmental Utility Authority - Lehigh Acres Utility System WTP No. Nanofiltration (SF 2243) (HF 1991)..... 470,588
Florida Governmental Utility Authority - North Fort Myers Utility System LS Bypass Pumps (SF 2245) (HF 1621)..... 575,000
Florida Governmental Utility Authority - North Fort Myers Utility System No. 1 Replacement (SF 2246) (HF 1622).... 1,441,176
Florida Keys Aqueduct Authority Marathon Reverse Osmosis Facility (SF 2509) (HF 1657)..... 10,000,000
Fort Myers Water Injection Well (SF 2220) (HF 2207)..... 1,000,000
Fort Myers Water Treatment Plant Expansion (SF 2221) (HF 2209)..... 1,250,000
Fort Pierce Inlet/Indian River Lagoon (IRL) Seagrass Restoration (SF 2140) (HF 2010)..... 1,426,310
Fort Pierce Utility Authority - Relocating Wastewater Treatment Plant off of the Indian River Lagoon (SF 2136) (HF 0116)..... 5,000,000
Frostproof - Wastewater Extension Septic to Sewer - Fir Avenue (SF 2801) (HF 0064)..... 992,310
Grand Ridge Wastewater Extension to I-10 (SF 1923) (HF 0665)..... 832,500
Greenacres - Swain Boulevard Sewer Extension - Phase 1 (SF 2333) (HF 0470)..... 600,000
Gulfport Sanitary Sewer Repairs Project (SF 2481) (HF 0341)..... 1,000,000
Haines City Lift Station Resiliency and Emergency Operational Improvements-Phase 1 (SF 2029) (HF 1811).... 1,406,466
Haines City Sewer Lift Station-22 Replacement and Associated Force-Main Upgrades (SF 2028) (HF 1810)..... 2,500,000
Hallandale Beach Rehabilitation of Lift Station #5 and Force Main Project (SF 3214) (HF 2070)..... 500,000
Hallandale Beach Rehabilitation of Lift Stations #10, #11 and #15 (SF 3215) (HF 2068)..... 945,000
Hamilton County Lift Station - Us Hwy 129 (SF 2317) (HF 1658)..... 750,000
Hernando County Hernando Beach Wastewater Resiliency Project (SF 2113) (HF 0495)..... 500,000
Hialeah Gardens North District Drainage Improvements (SF 1479) (HF 1338)..... 1,076,720
Hialeah Gardens South District Drainage Improvements (SF 1547) (HF 1339)..... 350,000
Hialeah Wastewater Improvements- Basin 010 and PS 008 (SF 1294) (HF 0488)..... 1,200,000
Highland Beach Climate Vulnerability/Clean Water Project - Lift Stations Rehabilitation (SF 1454) (HF 1867)..... 250,000
Hillsboro Inlet District - Winch Acquisition (SF 1478) (HF 1344)..... 95,000
Holly Hill Sewer Service Extension (SF 2155) (HF 2204).... 1,360,000
Homestead Pump Station #22 Upgrades (SF 1341) (HF 1517)... 1,500,000
~~Homestead Wastewater Treatment UV System Replacement (SF 1152) (HF 1518)..... 500,000~~
Homosassa River Restoration Project (SF 3095) (HF 0675)... 4,000,000
Howey-in-the-Hills North Wells and Water Treatment Plant

HOLLY HILL
FLORIDA

STAFF REPORT
CITY OF HOLLY HILL, FLORIDA

City Commission
Agenda Item

MEETING DATE: **September 26, 2023**
FROM: **Michele Moore**
SUBJECT: **Property & Liability Insurance for FY 2024**
NUMBER: **(ID # 4267)**
APPLICANT:
PLANNER:

DISCUSSION:

The City's agent, Brown & Brown, solicited renewals of all lines of coverage from our carrier Preferred Governmental Insurance Trust. This item updates the Commission on the City of Holly Hill's property, liability, automobile, workers compensation, AD&D and public official's insurance renewal premiums as solicited by our broker. Nationwide property insurance increases, claims experience and a increase in the worker's compensation modifier contributed to an increase in the City's annual premiums of $184,875. The total annual cost is increasing from $418,786 to $603,661.

FISCAL ANALYSIS:

These premiums have been budgeted as part of the Fiscal Year 2023-2024 budget.

STAFF RECOMMENDATION:

Staff recommends approval of all lines of coverage from our carrier.

COMMISSION GOAL:

Goal #1: Develop and maintain a sound and sustainable financial plan for the city that establishes sufficient reserves for all funds, ensures (whenever possible) that user fees pay for services rendered, provides a realistic capital improvement program, and encourages public/private sector partnerships and intergovernmental partnerships.

MOTION:

MOTION TO APPROVE ALL LINES OF INSURANCE COVERAGE FROM THE CITY'S INSURANCE CARRIER PREFERRED GOVERNMENTAL INSURANCE TRUST AND TO AUTHORIZE THE CITY MANAGER TO EXECUTE ALL REQUIRED COVERAGE DOCUMENTS.

- 2023 - 2024 City of Holly Hill Coverage Renewal Comparison (PDF)

2023 Renewal Insurance Estimate - City of Holly Hill

Brown & Brown INSURANCE

Coverage	*Expiring 2022*	*Proposed 2023*	*Exposure Change*
Property	$ 177,895	$ 311,392	9.14%
Inland Marine	$ 3,526	$ 5,634	0%
Crime	$ 1,102	$ 1,267	0%
General Liability	$ 32,213	$ 39,418	8.09%
Cyber Liability	$ 5,265	$ 6,045	0%
Law Enforcement Liability	$ 27,343	$ 29,709	13%
Public Officials & EPLI	$ 25,537	$ 28,992	13%
Auto Liability	$ 20,403	$ 24,084	8%
Auto Physical Damage	$ 12,933	$ 15,395	4.02%
Crime LEO Pension	$ 2,875	$ 3,450	0%
Workers' Compensation	$ 108,249	$ 136,830	9.19%
AD&D	$ 1,445	$ 1,445	0%
TOTAL	***$ 418,786***	***$ 603,661***	

Attachment: 2023 - 2024 City of Holly Hill Coverage Renewal Comparison (4267 : Property & Liability

Property	*Limits*	*Rate*	*Limits*	*Rate*
Total TIV	**$ 52,971,195**	$ 0.3358	**$ 57,810,495**	$ 0.5386
Building & Contents TIV - Blanketed	$ 52,971,195		$ 57,810,495	
Flood Limit Per Occurrence & Aggregate	$ 5,000,000		$ 5,000,000	
Earth Movement Limit Per Occurrence & Aggregate	$ 5,000,000		$ 5,000,000	
Terrorism	$ 5,000,000		$ 5,000,000	
Equipment Breakdown	$ 53,902,495		$ 57,810,495	
Named Windstom	5% / $35,000 Minimum		5% / $35,000 Minimum	
Flood Any One Occurrence	$ 2,500		$ 2,500	
All Other Perils Per Occurrence	$ 2,500		$ 2,500	
Accounts Receivable	$ 500,000		$ 500,000	
Additional Expense	$ 1,000,000		$ 1,000,000	
Animals - Annual Aggregate	$ 5,000		$ 5,000	
Business Income	$ 1,000,000		$ 1,000,000	
Buildings Under Construction	If Shown on Property Schedule		If Shown on Property Schedule	
Debris Removal Per Occurrence (Whichever is Greater)	$250,000/25% of Loss		$250,000/25% of Loss	
Demolition, Ordinance and Increased Cost of Construction	$ 500,000		$ 500,000	
Errors & Ommissions	$ 250,000		$ 250,000	

Attachment: 2023 - 2024 City of Holly Hill Coverage Renewal Comparison (4267 : Property & Liability

Fungus Cleanup Expense - Annual Aggregate	$ 50,000	$ 50,000
Lawns, Plants, Trees and Shrubs	$ 25,000	$ 25,000
Personal Property of Employees	$ 50,000	$ 50,000
Pollution Cleanup Expense - Annual Aggregate	$ 50,000	$ 50,000
Preservation of Property	$ 250,000	$ 250,000
Professional Fees	$ 20,000	$ 20,000
Property at Miscellaneous Unnamed Locations	$ 150,000	$ 150,000
Service Interruption Coverage	$ 100,000	$ 100,000
Transit	$ 250,000	$ 250,000

Attachment: 2023 - 2024 City of Holly Hill Coverage Renewal Comparison (4267 : Property & Liability

Inland Marine		*Rate*		*Rate*
Total All Inland Marine	***$ 1,366,368***	***$ 0.2581***	***$ 1,366,368***	***$ 0.4123***
Blanket Unscheduled Inland Marine	$ 1,033,570		$ 1,033,570	
Scheduled Inland Marine	$ 332,798		$ 332,798	
Deductible - Named Storm	3% / $15,000 Minimum		3% / $15,000 Minimum	
Deductible - Per Occurrence	$ 1,000		$ 1,000	
Crime				
Employee Dishonesty - Blanket Form	$ 500,000		$ 500,000	
Forgery Alteration	$ 500,000		$ 500,000	
Theft, Disappearance and Destruction - Inside	$ 500,000		$ 500,000	
Theft, Disappearance and Destruction - Outside	$ 500,000		$ 500,000	
Computer Fraud Including Funds Transfer Fraud	$ 500,000		$ 500,000	
Deductible - Each Coverage	$ 1,000		$ 1,000	
General Liability: Occurrence Form				
General Aggregate	Not Applicable		Not Applicable	
Bodily Injury and Property Damage - Each Occurrence	$ 1,000,000		$ 1,000,000	
Products/Comp Ops Aggregate	Included		Included	
Personal and Advertising Limit	Included		Included	

Attachment: 2023 - 2024 City of Holly Hill Coverage Renewal Comparison (4267 : Property & Liability

Damage to Premises Rented to You	Included	Included
Medical Expense	$ 2,500	$ 2,500
Bert J Harris Jr. Private Property Rights Protection Act	$ 300,000	$ 300,000
Herbicide & Pesticide Aggregate	$ 1,000,000	$ 1,000,000
Employee Benefits Liability: Occurrence Form		
Each Occurrence	$ 1,000,000	$ 1,000,000
Deductible	***NIL***	***NIL***
Classifications	***Exposure***	***Exposure***
Payroll (Excluding Police)	$ 4,925,302	$ 5,323,730

Attachment: 2023 - 2024 City of Holly Hill Coverage Renewal Comparison (4267 : Property & Liability

Law Enforcement Liability: Occurrence Form		
Per Person	$ 1,000,000	$ 1,000,000
Per Occurrence	$ 1,000,000	$ 1,000,000
Aggregate	Not Applicable	Not Applicable
Classifications	***Exposure***	***Exposure***
Full Time Officers	26	26
Part Time Officers	0	0
Volunteers (Police)	0	0

Defense costs are outside the limits; does not erode the limit for general liability, law enforcement liability

Deadly Weapon Protection Coverage: Claims Made		
Each Event	$ 1,000,000	$ 1,000,000
*Business Interruption Per Event	Included	Included
*Demolition, Clearance and Memorialization Per Event	$ 250,000	$ 250,000
*Extra Expense Per Event	$ 250,000	$ 250,000
*Crisis Management Per Event	Included	Included
*Property Damage Extension Per Event	$ 250,000	$ 250,000
*Counseling Services Per Event	$ 250,000	$ 250,000
*Funeral Expenses Per Event	$ 250,000	$ 250,000

Attachment: 2023 - 2024 City of Holly Hill Coverage Renewal Comparison (4267 : Property & Liability

*Claims Expenses Per Event	Included	Included
Crisis Response Team Services	24 Hours	24 Hours
Retroactive Date	***10/1/2019***	***10/1/2019***

Attachment: 2023 - 2024 City of Holly Hill Coverage Renewal Comparison (4267 : Property & Liability

Public Officials Liability: Occurrence Form				
Each Claim and Annual Aggregate	$	1,000,000	$	1,000,000
Deductible: Per Wrongful Act		***NIL***		***NIL***
Pre-Termination				
Per Employee		$2,500		$2,500
Annual Aggregate		$5,000		$5,000
Non-Monetary - Defense and Claims Expense Aggregate	$	100,000	$	100,000
Key Individual Replacement Expenses	$	25,000	$	25,000
Emergency Travel Expenses	$	5,000	$	5,000
Identity Theft Expenses	$	5,000	$	5,000
Classifications		***Exposure***		***Exposure***
Payroll (Excluding Police)	$	6,455,584	$	7,048,758

Employment Practices Liability: Claims Made w/Duty to De				
Each Claim and Annual Aggregate	$	1,000,000	$	1,000,000
Retroactive Date		***NIL***		***NIL***
Deductible: Per Wrongful Act		***NIL***		***NIL***
Classifications		***Exposure***		***Exposure***
Payroll	$	6,455,584	$	6,455,584
Full Time Employees		121		123

Attachment: 2023 - 2024 City of Holly Hill Coverage Renewal Comparison (4267 : Property & Liability

Part Time Employees	5	5
Cyber Liability/Media Content Services, Network Security &		
Each Claim and Annual Aggregate	$ 2,000,000	$ 2,000,000
Voluntary Notification Endorsement	Included	Included
Payment Card Industry Data Security Standard (PCIDS) Subl	$ 250,000	$ 250,000
Social Engineering (Sublimit)	$ 250,000	$ 250,000
Retroactive Date	***10/01/20112***	***10/01/20112***
Deductible: Per Wrongful Act	$ -	$ -

Attachment: 2023 - 2024 City of Holly Hill Coverage Renewal Comparison (4267 : Property & Liability

Commercial Auto Liability				
Bodily Injury and Property Damage	$ 1,000,000		$ 1,000,000	
Personal Injury Protection	$ 10,000		$ 10,000	
Medical Payments	$ 5,000		$ 5,000	
Uninsured Motorists	$ -		$ -	
Physical Damage - Owned Auto	$ -		$ -	
Physical Damage - Hired Auto	$ 50,000		$ 50,000	
Hired Non Owned Auto Liability	$ -		$ -	
Fleet Summary				
Physical Damage Insured Values	$ 3,052,118		$ 3,174,812	
Deductible: Physical Damage	$ 1,000		$ 1,000	
Workers Compensation Class Code	***Exposure***		***Exposure***	***YOY Change***
5509 Street or Road Maintenance	$ 351,963		$ 441,033	25.31%
7520 Waterworks Operations	$ 643,020		$ 638,630	-0.68%
7580 Sanitary or Sanitation	$ 582,774		$ 601,866	3.28%
7704 Firefighters & Drivers	$ 903,714		$ 972,042	7.56%
7720 Police Officers & Drivers	$ 1,530,282		$ 1,725,028	12.73%
8380 Automobile Service Repair	$ 172,226		$ 194,216	12.77%
8810 Clerical	$ 1,604,144		$ 1,728,831	7.77%

Attachment: 2023 - 2024 City of Holly Hill Coverage Renewal Comparison (4267 : Property & Liability

9015 Buildings Owner or Lessee	$ 188,526		$ 228,142	21.01%
9102 Park NOC Employees & Drivers	$ 46,763		$ 50,322	7.61%
9410 Municipal NOC	$ 432,172		$ 468,648	8.44%
Experience Modifier	**1.13**		**1.30**	
Total	***$ 6,455,584***		***$ 7,048,758***	***9.19%***

Attachment: 2023 - 2024 City of Holly Hill Coverage Renewal Comparison (4267 : Property & Liability

Accidental Death & Dismemberment - Eligibility:		
Class I	$ 75,000	$ 75,000
Class II	$ 150,000	$ 150,000
Class III	$ 275,000	$ 275,000

Accidental Death & Dismemberment - Benefit(s):		
Accidental Death Occur Within	365 Days	365 Days
Accidental Dismemberment Occur Within	365 Days	365 Days
Coma Benefit Occur Within Waiting Period	365 Days 31 Days 1% of Principal Sum	365 Days 31 Days 1% of Principal Sum

Accidental Death		
Life	100% of Principal Sum	100% of Principal Sum
Accidental Dismemberment		
Both Hands or Both Feet	100% of Principal Sum	100% of Principal Sum
One Hand or One Foot	100% of Principal Sum	100% of Principal Sum
One Hand or One Foot Plus Sight of One Eye	100% of Principal Sum	100% of Principal Sum
Sight of Both Eyes	100% of Principal Sum	100% of Principal Sum

Speech and Hearing	100% of Principal Sum	100% of Principal Sum
Speech or Hearing	50% of Principal Sum	50% of Principal Sum
One Hand or One Foot or Sight of One Eye	50% of Principal Sum	50% of Principal Sum
Thumb and Index Finger of the Same Hand	25% of Principal Sum	25% of Principal Sum
Plegia:		
Quadriplegia (Total Paralysis of All Limbs)	100% of Principal Sum	100% of Principal Sum
Paraplegia (Total Paralysis of Both Lower Limbs)	50% of Principal Sum	50% of Principal Sum
Hemiplegia (Total Paralysis of Both Limbs on One Side of Bo	50% of Principal Sum	50% of Principal Sum
Uniplegia (Total Paralysis of One Limb)	25% of Principal Sum	25% of Principal Sum

Additional Benefit(s):		
Applicable to Class I, Class II & Class III Critical Burn Benefit	5% $5,000	5% $5,000
Applicable to Class I, Class II & Class III Day Care Benefit	2%	2%
Applicable to Class I, Class II & Class III HIgher Education Benefit	5%	5%
Applicable to Class I, Class II & Class III Home Alteration and Vehicle Modification Benefit	10% $10,000	10% $10,000
Applicable to Class I, Class II & Class III Rehabilitation Benefit	10% $10,000	10% $10,000
Applicable to Class I, Class II & Class III Therapeautic Counseling Benefit	90 Days $5,000	90 Days $5,000
Applicable to Class I Spouse/Domestic Partner Retraining Benefit	5% $2,500	5% $2,500
Applicable to Class II Spouse/Domestic Partner Retraining Benefit	3% $2,500	3% $2,500

Applicable to Class II & Class III	30 Days	30 Days
Accident Weekly Indemnity Benefit	7 Days	7 Days
Applicable to Class II & Class III	5%	5%
Cobra Benefit	$5,000	$5,000
Applicable to Class II & Class III	1%	1%
Surviving Spouse/Domestic Partner Benefit	3 Months	3 Months

Crime LEO Pension		
Designated Benefit Plan Fiduciary Liability For All Claims	$ 1,000,000	$ 1,000,000
*Settlement Program Limit of Liability For Each Settlement Program Notice	$ 250,000	$ 250,000
HIPAA Limit of Liability	$ 1,000,000	$ 1,000,000
502(c) Penalties Limit of Liability	$ 250,000	$ 250,000
Retention *For Each Claim Under Insuring Agreement A*	*$ 5,000*	*$ 5,000*

Attachment: 2023 - 2024 City of Holly Hill Coverage Renewal Comparison (4267 : Property & Liability

**For Basic Illustration Purposes Only - Please Refer to Policies for Specific Information*

HOLLY HILL
FLORIDA

STAFF REPORT
CITY OF HOLLY HILL, FLORIDA

City Commission
Resolution

MEETING DATE: **September 26, 2023**
FROM: **Antoine Khoury**
SUBJECT: **A Resolution of the City Commission of the City of Holly Hill, Florida, Awarding the Contract of Fire Station Construction to Sabounji Construction, Inc., in the Amount of $3,375,700.00 and Authorizing the City Manager to Execute the Same; Providing for Severability; and Providing for an Effective Date.**
NUMBER: **2023-R-55**
APPLICANT:
PLANNER:

DISCUSSION:

On August 29, 2023, a bid opening was held for the construction of an approximately 6,500 square foot fire station building, to include drainage, grading, utilities, landscaping, irrigation, and other miscellaneous work as specified in Invitation to Bid 22-BG-06. Five (5) proposals were received from contractors:

A.G. Pifer Construction	$3,953,102.61
CIC Construction Group USA, LLC	$3,803,972.00
Collage Design & Construction Group, Inc.	$3,642,418.74
Paul Culver Construction, Inc.	$3,695,000.00
Saboungi Construction, Inc.	$3,375,700.00

The Invitation to Bid and proposals received are included under “Exhibits A-H”.

The City’s Architectural Consultant for this project, Hall & Ogle Architects, Inc., has reviewed the bid packages for this project. The bid packet received by the apparent low bidder, Saboungi Construction, Inc., was reviewed, and checks with subcontractors and references have been performed. It is the recommendation of Hall & Ogle Architects, Inc., that the award of this project be given to Saboungi Construction, Inc. The Architect’s recommendation letter is included under “Exhibit I.”

Staff have also reviewed the bid packet submitted by Saboungi Construction, Inc., and concur with the recommendation of award.

FISCAL ANALYSIS:

$2,500,420.84 has been budgeted for this project under account 301-8110-580-6200. In addition, a State Fire Marshal Florida Department of Financial Services grant has been received in the amount of $1,250,000, bringing a total budget to $3,750,420.84. There has been a total of $259,978.31 in encumbrances and expenditures of this project for architectural design, permitting and construction administration, leaving an available budget of $3,490,442.53.

STAFF RECOMMENDATION:

Award the contract for the construction of the new Fire Station to Saboungi Construction, Inc., in the amount of $3,375,700.00 and authorize the City Manager to execute the same.

COMMISSION GOAL:

Goal #1: Develop and maintain a sound and sustainable financial plan for the city that establishes sufficient reserves for all funds, ensures (whenever possible) that user fees pay for services rendered, provides a realistic capital improvement program, and encourages public/private sector partnerships and intergovernmental partnerships.

Goal #2: Enhance City aesthetics through beautification and maintenance of city property and public rights of way, consistent enforcement of zoning and property maintenance codes, and development of reasonable design standards and a corresponding process which is applicable to all new developments and business improvements in the city.

Goal #4: Provide proficient public health and safety services in terms of police and fire protection, water, storm water, waste water and solid waste management and disaster preparedness with a focus on intergovernmental collaboration, private sector partnerships, and utilization of technologies and proven innovations.

MOTION:

AWARD THE CONTRACT FOR THE CONSTRUCTION OF THE NEW FIRE STATION TO SABOUNJI CONSTRUCTION, INC. IN THE AMOUNT OF $3,375,700.00 AND AUTHORIZE THE CITY MANAGER TO EXECUTE THE SAME.

ATTACHMENTS:

- Exhibit A - Fire Station ITB 22-BG-06 (PDF)
- Exhibit B - Fire Station #96 Project Manual (PDF)
- Exhibit C - Fire Station #96 Bid Set(PDF)
- Exhibit D - A.G. Pifer Construction - 22-BG-06 Bid Proposal (PDF)
- Exhibit E - CIC Construction Group USA - 22-BG-06 Bid Proposal (PDF)
- Exhibit F - Collage Construction - 22-BG-06 Bid Proposal (PDF)
- Exhibit G - Paul Culver Construction - 22-BG-06 Bid Proposal (PDF)

- Exhibit H - Saboungi Construction - 22-BG-06 Bid Proposal (PDF)
- Exhibit I - Architects Recommendation of Contract Award (PDF)

Resolution No. 2023-55

A RESOLUTION OF THE CITY COMMISSION OF THE CITY OF HOLLY HILL, FLORIDA, AWARDING THE CONTRACT OF FIRE STATION CONSTRUCTION TO SABOUNJI CONSTRUCTION, INC., IN THE AMOUNT OF $3,375,700.00 AND AUTHORIZING THE CITY MANAGER TO EXECUTE THE SAME; PROVIDING FOR SEVERABILITY; AND PROVIDING FOR AN EFFECTIVE DATE.

A RESOLUTION OF THE CITY COMMISSION OF THE CITY OF HOLLY HILL, FLORIDA, AWARDING THE CONTRACT OF FIRE STATION CONSTRUCTION TO SABOUNJI CONSTRUCTION, INC., IN THE AMOUNT OF $3,375,700.00 AND AUTHORIZING THE CITY MANAGER TO EXECUTE THE SAME; PROVIDING FOR SEVERABILITY; AND PROVIDING FOR AN EFFECTIVE DATE.

WHEREAS, an Invitation to Bid was advertised for the construction of a replacement Fire Station; and

WHEREAS, five (5) proposals were received for this project; and

WHEREAS, Sabounji Construction, Inc., was the apparent low bidder for this project; and

WHEREAS, the proposal from Sabounji Construction has been vetted with a recommendation of award given by Hall & Ogle Architects, Inc.; and

WHEREAS, there is adequate funding in the current budget for this project.

NOW, THEREFORE, BE IT RESOLVED BY THE CITY COMMISSION OF THE CITY OF HOLLY HILL, FLORIDA:

SECTION 1. That the City Commission of the City of Holly Hill award the contract of Fire Station Construction to Sabounji Construction, Inc., in the amount of $3,375,700 and authorize the City Manager to execute the same.

SECTION 2. SEVERABILITY. If any section or portion of a section of this Resolution proves to be invalid, unlawful, or unconstitutional, it shall not be held to invalidate or impair the validity, force, or effect of any other section or part of this Resolution.

SECTION 3. EFFECTIVE DATE. This Resolution shall take effect immediately upon its adoption

APPROVED AND AUTHENTICATED on this 26th day of SEPTEMBER, 2023.

Invitation to Bid

NUMBER
22-BG-06

HOLLY HILL
FLORIDA

Fire Station Construction

Michele Moore, Finance Director

Attachment: Exhibit A - Fire Station ITB 22-BG-06 (2023-R-55 : Fire Station Construction)

TABLE OF CONTENTS
CITY OF HOLLY HILL

FIRE STATION CONSTRUCTION

BID NO. 22-BG-06

Section	Title
	DIVISION 0 – BIDDING AND CONTRACT REQUIREMENTS
00 02 00	Invitation to Bid
00 10 00	Instruction to Bidders
00 30 00	Proposal
00 31 00	Schedule of Unit Prices
00 32 00	Statement of Bidder's Qualifications
00 33 00	Listing of Subcontractors
00 33 10	Listing of Previous Experience
00 47 00	Sworn Statement under Section 287.133(3)(a), Florida Statutes, on Public Entity Crimes
00 48 00	Anti-Collusion Statement
00 48 50	Drug Free/Tie Preference Statement
00 48 60	Compliance with Public Records
00 48 70	W-9 Request for Taxpayer Identification
00 48 80	E-Verify Compliance
00 50 00	Agreement
00 65 00	Certificate of Insurance for Public Liability & Property Damage
00 66 00	Affidavit Regarding Workman's Compensation
00 66 50	Certificate of Insurance For Workman's Compensation
00 67 00	Contractor's Statement Under Oath, To Owner
00 80 00A	Contractor's Standard Insurance Requirement and Indemnification Clause
00 84 00	Contractor Request for Information (RAI)
00 84 10	Notice of Award Form
00 84 20	Notice to Proceed Form
00 84 30	Change Order Form
00 84 40	Application and Certificate for Payment Form
	DIVISION 1 – GENERAL REQUIREMENTS
01 35 01	Attachments
01 42 00	References
01 78 36	Warranties

END OF TABLE OF CONTENTS

Attachment: Exhibit A - Fire Station ITB 22-BG-06 (2023-R-55 : Fire Station Construction)

SECTION 00 02 00
INVITATION TO BID
CITY OF HOLLY HILL, FLORIDA
FIRE STATION CONSTRUCTION
BID# 22-BG-06

Notice is hereby given that the City of Holly Hill, Florida is accepting bids for:

FIRE STATION CONSTRUCTION

Sealed bids will be accepted by the City of Holly Hill, 1065 Ridgewood Avenue, Holly Hill, Florida 32117, **until 10:00 am, August 29, 2023** at which time and place all proposals received shall be publicly opened and read aloud in the City Hall.

There will be a non-mandatory pre-bid meeting for this project at **City of Holly Hill Commission Chamber at 11:00 am on July 25, 2023** The meeting will be held in the Commission Chambers, located in City Hall, 1065 Ridgewood Avenue, Holly Hill, FL 32117.

Description of Work - Services to be provided shall include the following:

The City of Holly Hill is requesting bids to construct an approximately 6,500 square foot fire station building to include drainage, grading, utilities, landscaping, irrigation and miscellaneous work per the specifications and site plan drawings.

Copies of the bid documents may be obtained electronically from VendorLink at www.myvendorlink.com. Any addenda to these bid documents will be posted on the VendorLink website. It is the bidder's responsibility to confirm that all addenda have been received prior to submitting a bid for this project. All questions should be directed **in writing** to the City's architectural consultant, Hall & Ogle, Architects, Inc. at scerqueira@hoarchitects.com. Questions to be submitted no later than **5:00 p.m. on August 23, 2023.**

All bidders are required to complete and submit the "Public Entity Crime Sworn Statement", Form #PUR 7068, as designated by Florida Statutes, Section 287.133(3)(a), with their bids.

The City of Holly Hill is not responsible for the U.S. mail or private carriers or messengers in regard to mail being delivered by the specified time so that a bid can be considered. No bids received after the time and date specified for the opening will be considered. The City of Holly Hill, Florida reserves the right to reject any and all bids, to waive any and all non-substantial irregularity in bids reviewed, whenever such rejection or waiver is in the best interest of the City.

One (1) original and (1) electronic copy on USB flash drive of the bid shall be addressed to City Clerk, City of Holly Hill, 1065 Ridgewood Avenue, Holly Hill, Florida 32117, in a sealed envelope plainly marked on the outside:

FIRE STATION CONSTRUCTION

Attachment: Exhibit A - Fire Station ITB 22-BG-06 (2023-R-55 : Fire Station Construction)

CITY OF HOLLY HILL
VOLUSIA COUNTY,
FLORIDA s/ Joseph A. Forte
City Manager

Attachment: Exhibit A - Fire Station ITB 22-BG-06 (2023-R-55 : Fire Station Construction)

SECTION 00 10 00

INSTRUCTIONS TO BIDDERS

PART 1 - GENERAL

1.01 PROJECT DESCRIPTION

A. The work of this project consists of furnishing all labor, materials, equipment, tools, transportation, services, and incidentals and performing all work necessary to construct

FIRE STATION CONSTRUCTION

BID NO. 22-BG-06

B. The location of this project is the project immediately north of the existing fire station located at 1020 Daytona Avenue, Holly Hill, Florida 32117.

1.02 DEFINED TERMS

Terms used in the Instructions to Bidders are defined and have the meanings assigned to them in the General Conditions.

1.03 COPIES OF BIDDING DOCUMENTS

A. The project manual and project drawings for the Fire Station Construction are included as Exhibits 'A' and 'B' respectively.

1.04 RECEIPT OF BIDS

The Place to which proposal must be delivered, the amount of Proposal Security required and the date, time and place of opening of proposals, are stated in the Invitation to Bid. The Proposal form amplifies the Advertisement in indicating the location and description of the project to be constructed and shows the approximate quantities of work to be performed and materials to be furnished, if a unit price contract, any special requirements which may vary from or are not contained in the specifications. The bid documents as listed in Paragraph 1.08, Preparation of Proposal, shall be submitted as described in Section 00 30 00-3 under Supplemental Requirements.

1.05 BIDDER'S QUALIFICATIONS

The Bidder will be required to show that he/she is capable of performing the work contemplated and shall furnish, if requested, in duplicate the following:

Attachment: Exhibit A - Fire Station ITB 22-BG-06 (2023-R-55 : Fire Station Construction)

a. A sworn statement showing the equipment definitely controlled by the Bidder and available to him for performing the work;

b. A sworn statement of his/her experience in performing work of the character for which his bid is submitted; and,

c. A sworn statement showing his current assets and liabilities as of a date not more than ninety (90) days prior to the date of submission.

If the Owner approves the above required statements and the Proposal is accompanied by the specified security, the person, firm or corporation submitting such Proposal shall be considered as a qualified Bidder.

1.06 BIDDER'S RESPONSIBILITY

The Bidder is required to carefully examine the site of the project, the Proposal Form, Drawings, Specifications, Agreement Form, and all other forms pertinent to the work contemplated. It will be assumed that he has satisfied himself as to the conditions to be encountered, the character, quality, and quantities of work to be performed and materials to be furnished, and the requirements of the Contract and specifications. No allowance or concession will be made for lack of such information on the part of the Contractor.

Whenever such information concerning subsurface materials or conditions is given on the drawings, it is understood, in the absence of any qualifying notation, that it was obtained in the usual manner and the location, depths, and character of the material have been recorded in good faith. There is no expressed or implied agreement that the depths or the character of the material have been correctly indicated and Bidders should take into account the possibility that conditions affecting the cost or quantities of work to be done may differ from those indicated.

1.07 APPROXIMATE ESTIMATE OF QUANTITIES

The Bidder's attention is directed to the fact that in contracts based on unit prices the estimate of quantities of work to be done and materials to be furnished under these specifications, as shown on the Proposal Form, and in the Contract, is approximate and is given only as a basis of calculation upon which to determine the lowest Bidder. The Owner does not assume any responsibility that the quantities shall obtain strictly in the construction of the Project, nor shall the Contractor plead misunderstanding or deception because of such estimate of quantities, or of the character of the work or location, or other conditions pertaining thereto.

Attachment: Exhibit A - Fire Station ITB 22-BG-06 (2023-R-55 : Fire Station Construction)

The Owner reserves the right to increase or diminish any or all of the above mentioned quantities of work or to omit any of them, as it may deem necessary, and such increase or decrease of the quantities given for any of the items shall not be considered as sufficient grounds for granting an increase in the unit prices bid, except as set forth in the General Conditions.

1.08 PREPARATION OF PROPOSAL

In preparing Proposals in the manner prescribed under Paragraph 1.14, the Proposal Form, the Bid Form (when a Bid Bond is permitted as proposal security), Certificate as to Corporate Principal, Public Entity Crimes Statement, Anti-Collusion Statement, and Drug Free/Tie Preference Statement, must be properly executed in ink .

Upon the prescribed Schedule of Unit Prices, all bid prices shall be written in ink, in both words and numerals, in the blank spaces for each item, with the amounts extended if a unit price bid and all amounts totaled. In the event of any discrepancy between the written amounts and the numerals, the written amounts shall govern and will be considered as the price bid. The sum of the Total Bid as calculated from the individual items in Section 00 31 00, Schedule of Unit Prices, shall equal the Total Price as listed in Section 00 30 00, Proposal.

Except as provided below, bids containing substitutions or combinations of alternates will not be considered unless such substitutions or combinations are specifically authorized by the Proposal.

In unit price bids, the extensions, if any, and the total are for informational purposes only, and the determination of the lowest bid will be based solely on the total results of computations of the estimated quantities and the prices bid. The Bidder shall submit a completed Schedule of Unit Prices, Section 00 31 00 with each bid. The bid may be considered non-responsive without this form.

The Bidder shall sign his/her name and give his/her business address in the spaces provided therefore. If the Proposal is made as a partnership, it shall be signed by all partners; if made by a corporation, it shall be signed in the name of the corporation by one of the officers thereof and shall have affixed the seal of the corporation.

1.09 PROPOSAL SECURITY

A Bid Bond or certified check in the amount of Five Percent (5%) of the Contract Sum shall accompany this bid.

1.10 WITHDRAWAL OF PROPOSALS

All Bidders specifically waive any right to withdraw a Proposal after it has been submitted to the Owner, except as hereinafter provided. A Bidder may withdraw a Proposal provided the Bidder makes a request to do so by telephone, telegraph, or in writing to the Owner, and provided that such requests reach the office of the Owner not later than the day previous to the date set for opening thereof. Requests by telephone or telegraph must be confirmed in writing, by the Bidder in person, or by an accredited representative of the Bidder before the time set for the opening of the Proposals.

Attachment: Exhibit A - Fire Station ITB 22-BG-06 (2023-R-55 : Fire Station Construction)

No bids may be withdrawn for a period of NINETY (90) DAYS after the date and time designated for the opening thereof.

1.11 RIGHT TO REJECT PROPOSALS

The unqualified right is reserved by the Owner to waive any informalities in, or reject any or all Proposals as may be deemed to the best interest of the Owner. Proposals which contain any omissions, erasures, alterations, additions not called for, conditional bids, or irregularities of any kind, or Proposals otherwise regular which are not accompanied by Proposal Security, may be rejected as informal. Proposals in which the bid prices are obviously unbalanced may be rejected.

1.12 CHANGES PRIOR TO THE OPENING OF BIDS

During the period allowed for preparation of bids, the Bidders may be furnished addenda or bulletins for additions to or alterations of the Drawings or Specifications, which shall be included in the work covered by the Proposal and become a part of the Contract Documents, Bidders may submit to the a written request for an interpretation thereof to sjuengst@hollyhillfl.org. The Bidder submitting the request will be responsible for its prompt delivery. Any interpretation of the Contract Documents will be made only by addendum duly issued and a copy of such addendum will be mailed or delivered to each prospective Bidder of Record. The Owner will not be responsible for any other explanations or interpretations of the proposed Contract Documents.

1.13 LOBBYING

All firms are hereby placed on **NOTICE** that the City does not wish to be lobbied, either individually or collectively about a matter for which a firm has submitted a Qualification.

Firms and their agents are not to contact members of the City Commission for such purposes as meeting or introduction, luncheons, dinners, etc. During the process, **from Proposal announcement to final Commission approval**, no firm or their agent shall contact any other employee of the City in reference to this Bid, with the exception of the Finance Director or the Engineer of record if applicable. Failure to abide by this provision may serve as grounds for disqualification for award of this contract to the firm.

Attachment: Exhibit A - Fire Station ITB 22-BG-06 (2023-R-55 : Fire Station Construction)

1.14 SCOPE OF WORK

Unless otherwise provided in the Construction Specifications or the Proposal, it is the intent of the Contract Documents to prescribe a complete project which the Bidder proposes to construct, by furnishing all labor, materials, equipment, tools, necessary utilities and other facilities, and performing all work necessary to incidental to such construction, in full compliance with the Drawings, Specifications, Proposal, and Contract, and any special requirements contained therein or supplements attached thereto.

Should any construction or condition be anticipated which is not covered by these Specifications, the special requirements thereof will be stated in the Proposal, and any such special requirements shall be considered a part of these specifications as though they were fully contained herein. If any special requirements stated in the Proposal conflicts with any of the provisions of these Specifications, the former shall govern.

A detailed scope of work is included in the project manual (Exhibit A) and project drawings (Exhibit B).

1.15 SUBMITTING PROPOSAL

One (1) original and (1) electronic copy on USB flash drive of the Proposal, all addenda, if any, and all other required supporting documentation shall be submitted in an opaque, sealed envelope, addressed to the Owner. The name of the Bidder shall appear in the upper left-hand corner of the envelope and the following notation shall appear in the lower left-hand corner.

FIRE STATION CONSTRUCTION

1.16 AWARD AND EXECUTION OF CONTRACT

When a Proposal received has been determined to be satisfactory, a Contract will be awarded to the lowest responsible Bidder within the time designated in the Contract Documents.

The Bidder to whom the award is made shall execute the Contract and return it, together with the properly executed bonds and insurance certificates, to the office of the Owner, within the time specified in Paragraph 1.09 of Section 00 10 00.

If the Contractor executes his Contract as herein provided and the Contract is not executed by the Owner within thirty (30) days after the receipt thereof from the Contractor, the Owner upon written request of the Contractor will return the Proposal Security. In such event, the award of the Contract shall be considered as annulled.

The Contract, Surety Bonds, and insurance certificates shall be executed in duplicate , or in as many copies as the Owner may require.

1.17 CANCELLATION OF AWARD

The Owner reserves the right to cancel the award of any contract at any time prior to its execution by the Owner.

Attachment: Exhibit A - Fire Station ITB 22-BG-06 (2023-R-55 : Fire Station Construction)

1.18 PERFORMANCE BONDS

Upon award, the successful bidder will be required to furnish and pay for a payment and performance bond acceptable to the owner and with a minimum rating of Class IV by Bests Rating Classification for one hundred percent (100%) of the contract sum. The Performance Payment Bond must be recorded by the Clerk of the Court, Volusia County, and enter into a Contract for Services with the City of Holly Hill.

1.19 INDEMNITY AND INSURANCE

The Contractor shall not commence work under this Contract until he has obtained all insurance required under by these Specifications and such insurance has been approved by the Owner, nor shall the Contractor allow any subcontractor to commence work on a subcontract until all similar insurance required of the subcontractor has been so obtained and approved by the Contractor.

A. Certificates. The Contractor shall submit certificates or other documentary evidences to the Owner for approval, covering Workmen's Compensation Insurance; and Public Liability and Property Damage Insurance as well as any other insurance required by the Contract Documents.

   Each certificate or other documentary evidence presented shall contain therein or have contained in a rider attached thereto and made a part thereof, a clause to the effect that the insurer will notify the insured and the Owner in writing thirty (30) days prior to the cancellation of the policy. The certificate for each policy shall be executed in quintuplicate, or in as many copies as the Owner may require.

B. Accidents and Claims. The Contractor shall be held responsible for all accidents and shall indemnify to the extent permitted by law and protect the Owner from all suits, claims and actions brought against it, and all cost or liability, including attorney's fees, to which the Owner may be put for any injury or alleged injury to the person or property of another resulting from negligence or carelessness in the performance of the work, or from any improper or inferior workmanship, or from inferior materials used in the work.

C. Mutual Responsibility of Contractors. Should a Contractor in the performance of his/ her Contract cause damage to any person, any property, or work of another

   Owner or other party to the damage, arrange for an amicable settlement thereon.
   It is agreed by all parties herein that such disputes shall not delay completion of the work, nor be cause for claim against the Owner. Work shall be continued by the party claiming damages at his expense, subject to such damages as may be obtained by due course of law.

D. Contractor's Liability. The status of the Contractor in the work to be performed by him/her under this Contract is that of an independent Contractor and that, as such, he shall properly safeguard against any and all injury or damage to the public, to public and private property, materials and things; and that, as such, he/she alone shall be responsible for any and all damage, loss or injury to persons or property that may arise, or be incurred, in or during the conduct or progress of said work without regard to whether or not the Contractor, his/her

Attachment: Exhibit A - Fire Station ITB 22-BG-06 (2023-R-55 : Fire Station Construction)

subcontractors, agents, or employees have been negligent; and that that the Contractor shall keep the Owner free, and discharge of, and from any and all responsibility for risks or casualties of every description, for any or all damage, loss or injury to persons or property arising out of the nature of the work, from the action of the elements, or from any unforeseen or unusual difficulty, the Contractor shall assume and be liable for all blame and loss of whatsoever nature by reason of neglect or violation of any federal, state, county, or local laws, regulations or ordinances; that Contractor shall indemnify and save harmless the Owner and all its officers, agents and employees from all suits or actions at law caused by the negligence, recklessness or intentional wrongful misconduct of the Contractor and persons employed or utilized by the Contractor in the performance of the construction contract and shall, if required by the Owner, produce evidence of settlement of any such action before final payment shall be made by the Owner.

1.20 CANCELLATION OF CONTRACT

As soon as practicable after the satisfactory execution of the Contract by both parties, written notice to proceed with the work will be given to the Contractor. If such notice is not given within thirty (30) days after contract execution, and the delay is not caused by the Contractor or accepted by him/her in writing, the Contract may be declared null and void by either party.

If the Contractor incurs any expense in furtherance of the Contract prior to receipt of the Notice to Proceed, he/she does so on his own responsibility.

1.21 COMPLETION TIME AND LIQUIDATED DAMAGES

The Bidder shall understand that the time limit indicated for completion of this Contract, and the amount of liquidated damages to be charged against the Contractor shall be declared in default in accordance with the provisions of the Specifications, shall be as stated in Article II of the Form of Agreement which is a part of these Contract Documents.

1.22 PAYMENT OF TAXES

The Contractor will be responsible for payment of all Excise, Sales and Use Taxes, and all other taxes required by law on all materials, tools, apparatus, equipment, fixtures, and incidentals which he purchases or uses for the purpose of fulfilling the work of this Contract, and he/she shall include all amounts required for such taxes with the item prices bid in his Proposal.

No additional payment will be made to cover such taxes. Each Bidder shall thoroughly familiarize himself before submitting a Proposal, with all laws requiring the payment of taxes.

1.23 PUBLIC ENTITY CRIMES INFORMATION STATEMENT

A person or affiliate who has been place on the convicted vendor list following a conviction for a public entity crime may not submit a bid on a contract to provide any goods or services to a public entity, may not submit a bid on a contract with a public entity for the construction or repair of a public building or

Attachment: Exhibit A - Fire Station ITB 22-BG-06 (2023-R-55 : Fire Station Construction)

public work, may not submit bids on leases of real property to a public entity, may not be awarded or perform work as a contractor, supplier, subcontractor, or consultant under a contract with any public entity, and may not transact business with any public entity in excess of the threshold amount, provided in Section 287.017, for CATEGORY TWO for a period of 36 months from the date of being placed on the convicted vendor list.

1.24 PROHIBITION OF GIFTS TO CITY EMPLOYEES

No organization or individual shall offer or give, either directly or indirectly, any favor, gift, loan, fee, service or other item of value to any City employee, as set forth in Chapter 112, Part III, Florida Statutes, the City of Holly Hill purchasing policy section 14.2 and section 10.4.1 of the City of Holly Hill Personnel Rules and Regulations. Violation of this provision may result in one or more of the following consequences: a. Prohibition by the individual, firm, and/or any employee of the firm from contact with City staff for a specified period of time; b. Prohibition by the individual and/or firm from doing business with the City for a specified period of time, including but not limited to: submitting bids, ITB, and/or quotes; and, c. immediate termination of any contract held by the individual and/or firm for cause.

1.25 PROTEST PROCEDURES

Any appeal or protest to the Request for Bid shall be governed by the City of Holly Hill's Purchasing Policies and Procedures shown in Resolution 2018-30. A copy of his resolution is available by request to the City Clerk.

1.26 IMMIGRATION REFORM AND CONTROL ACT

Proposer acknowledges, and without exception or stipulation, any firm(s) receiving an award shall be fully responsible for complying with the provisions of the Immigration Reform and Control Act of 1986 as located at 8 U.S.C. 1324, et seq. and regulations relating thereto, as either may be amended.

Failure by the awarded firm(s) to comply with the laws referenced herein shall constitute a breach of the award agreement and the City shall have the discretion to unilaterally terminate said agreement immediately.

1.27 LOCAL VENDOR PREFERENCE

This is a State assisted project. As such, a local bidder preference will not be observed for this project.

END OF SECTION

Attachment: Exhibit A - Fire Station ITB 22-BG-06 (2023-R-55 : Fire Station Construction)

SECTION 00 30 00
PROPOSAL

FOR

CITY OF HOLLY HILL

FIRE STATION CONSTRUCTION

BID NO. 22-BG-06

(To be completed in Duplicate)

Bidder's Name:_____

Submitted: _____, 20

City of Holly Hill
City Clerk
1065 Ridgewood Avenue
Holly Hill, FL 32117

To Whom it May Concern:

The undersigned, as Bidder, hereby declares that the only person or persons interested in the Proposal, as principal or principals, is or are named herein and that no other persons than herein mentioned has any interest in the Proposal or the Contract to which the work pertains; that this Proposal is made without connection or arrangement with any other person, company, or parties making a bid or proposal and that the Proposal is in all respects fair and made in good faith without collusion or fraud.

The Bidder further declares that he has examined the site of the work and that from personal knowledge and experience, or that he/she has made sufficient test holes and/or other subsurface investigations to fully satisfy self that such site is a correct and suitable one for this work and he/she assumes full responsibility therefore; that he/she is familiar with all legal requirements (Federal, State and local laws, ordinances, rules and regulations) pertaining to the Work; that he/she has examined the Drawings and Specifications for the work and from his/her own experience or from professional advice that the Drawings and Specifications are sufficient for the work to be done and he/she has examined the other Contract Documents and all addenda relating thereto, and that he/she has satisfied himself/herself fully, relative to all matters and conditions with respect to the work to which this Proposal pertains.

The Bidder proposes and agrees, if this Proposal is accepted, to contract with the City of Holly Hill, (Owner) in the form of contract specified, to furnish all necessary materials, equipment, machinery, tools, apparatus, transportation, and labor and to perform all work necessary to complete the Work

Attachment: Exhibit A - Fire Station ITB 22-BG-06 (2023-R-55 : Fire Station Construction)

specified in the Proposal and other Contract Documents. The Bidder further proposes and agrees to comply in all respects with the time limits for commencement and completion of the Work as stated in the Contract Form.

The Bidder further agrees that the deductions for liquidated damages, as stated in the Contract Form, constitute fixed and agreed liquidated damages to reimburse the Owner for additional costs to the Owner resulting from the Work not being completed within the time limit stated in the Contract Form.

The undersigned agrees to accept as full compensation for completion of the project in full compliance with the Contract Documents, the unit prices for the items named in Section 00 31 00, Schedule of Unit Prices, submitted herein with this Proposal.

The undersigned offers to furnish all materials, equipment and labor for construction of**,**

FIRE STATION CONSTRUCTION

for the City of Holly Hill, Florida, complete in every respect in strict accordance with the drawings, specifications and any future changes therein. The Contractor shall perform these obligations for the prices listed in the "Schedule of Unit Prices: Section 00 31 00" attached and made a part of this Bid. **The bid total is:**

_____

(In Words)

Dollars $_____ (In Figures)

COMPLETION TIME OF CONTRACT

The Contractor agrees that the work shall be started not later than the date indicated in the Notice to Proceed and that the total work shall be completed within **365 days.**

The Contractor further agrees that for each calendar day, with the exception of Sundays and legal holidays that any work shall remain uncompleted after the stations completion times stipulated above the sum of **$500 (Five Hundred Dollars)** per day shall be deducted from monies due the contractor, not as a penalty, but as liquidated damages. If the Contractor is declared in default in accordance with the provisions of the Specifications, liquidated damages shall be charged as provided herein, and such amounts shall be deducted from the final amount payable to the Contractor or his/her Surety. Should the total amount chargeable as liquidated damages exceed the amount due or payable to the Contractor or his/her Surety, then such excess shall be paid to the Owner by the Contractor or his/her Surety.

Attachment: Exhibit A - Fire Station ITB 22-BG-06 (2023-R-55 : Fire Station Construction)

SUPPLEMENTAL REQUIREMENTS

The following documents are attached to and made a condition of this bid:

Schedule of Unit Prices: Section 00 31 00
Statement of Bidder's Qualifications: 00 32 00
Listing of Subcontractors: Section 00 33 00
Listing of Previous Experience: Section 00 33 10
Public Entity Crimes Statement: Section 00 47 00
Anti-Collusion Statement: Section 00 48 00
Drug Free/Tie Preference Statement: Section 00 48 50
Compliance with Public Records Law 00 48 60
W-9 Form 00 48 70
E-Verify Compliance 00 48 80
City of Holly Hill Insurance Requirements: Section 00 80 00A

REQUIRED DISCLOSURE

At its sole discretion, the City of Holly Hill, Florida may reject any bidder the City finds to lack, or whose present or former executive employees, officers, directors, stockholders, partners or owners are found by the City to lack honesty, integrity, or moral responsibility. The discretion of the City may be exercised based on the City's own investigation, public records, or any other reliable sources of information. By submitting a bid, bidder recognizes and accepts that the City may reject the bid based upon the exercise of its sole discretion and bidder waives any claim it might have for damages or other relief resulting from the rejection of its bid based on these grounds.

Attachment: Exhibit A - Fire Station ITB 22-BG-06 (2023-R-55 : Fire Station Construction)

ACKNOWLEDGMENT OF ADDENDA

Addenda will be issued via email and it is the Bidder's responsibility to confirm that all addenda have been received prior to submitting a bid for the project. Acknowledgment is hereby made of the following Addenda received since issuance of Drawings and Specifications:

Addendum No. _____ Dated: _____ Addendum No.Dated: _____
Addendum No. _____ Dated: _____ Addendum No.Dated: _____
Addendum No. _____ Dated: _____ Addendum No.Dated: _____

Attached hereto is a cashier's check on the _____Bank of _____ or Bid Bond for the sum of _____Dollars (_____),

made payable to _____(Owner).

_____
(Name of Bidder) (Affix Seal)

_____
(Signature of Officer)

_____
(Title of Officer)

_____
Name of Bidder

_____
Address

_____
City/State/Zip

_____
Telephone

_____
Contractor's Florida License Number

The full names and residences of persons and firms interested in the foregoing bid, as principals, are as follows:

_____
_____
_____

END OF SECTION

Attachment: Exhibit A - Fire Station ITB 22-BG-06 (2023-R-55 : Fire Station Construction)

SECTION 00 31 00
SCHEDULE OF UNIT PRICES
CITY OF HOLLY HILL

FIRE STATION CONSTRUCTION

BID# 22-BG-06

BID SCHEDULE
FIRE STATION CONSTRUCTION

_____
RESPONDENT

Site Work

NO	DESCRIPTION	UNIT	TOTAL PRICE
1	Site Sub Mobilization/Demolition/Site Preparation	LS	
2	Earthwork	LS	
3	Paving	LS	
4	Drainage	LS	
5	Water/Sewer/Miscellaneous Utilities	LS	
6	Landscaping/Irrigation	LS	

Building

NO	DESCRIPTION	UNIT	TOTAL PRICE
7	GC Mobilization/Survey/Miscellaneous	LS	
8	Supervision	LS	
9	General Labor	LS	
10	Building Layout/Preparation/Termite Treatment	LS	
11	Concrete Work	LS	
12	Masonry Work & Stone Panels	LS	
13	Steel Framing / Roof Joists and Deck	LS	
14	Lt. Ga. Trusses / Miscellaneous Lt. Ga. Exterior Framing	LS	
15	Roof System Low Slope/Pitched w/ Insulation System	LS	

Attachment: Exhibit A - Fire Station ITB 22-BG-06 (2023-R-55 : Fire Station Construction)

16	Miscellaneous Framing/Sheeting/Decking/Flashing/Trim	LS	
17	Ext. Air/Vapor/Water Sealing Masonry Walls	LS	
18	Ext/Int Doors/Hardware/Windows/Louvers	LS	
19	Interior Framing/GWB System/Finishes	LS	
20	Miscellaneous Insulation/Sealing	LS	
21	Ceiling System/Finishes	LS	
22	Floor System/Finishes	LS	
23	Millwork System	LS	
24	Miscellaneous Specialties/Accessories	LS	

Services

NO	DESCRIPTION	UNIT	TOTAL PRICE
25	Plumbing/Gas System	LS	
26	Fire Protection	LS	
27	HVAC	LS	
28	Electric System/IT System/Lightning Protection System	LS	
29	Emergency Generator System	LS	
30	Owner's Unforeseen Contingency Allowance	LS	$20,000.00

Contractor Fees

NO	DESCRIPTION	UNIT	TOTAL PRICE
31	General Conditions/Overhead/Profit	LS	
32	Performance/Payment Bond	LS	
33	Permits/Fees (as required)	LS	

Total Bid Cost _____
(In Figures)

Total Bid Cost _____
(In Words)

Attachment: Exhibit A - Fire Station ITB 22-BG-06 (2023-R-55 : Fire Station Construction)

Unit Pricing Add/Deduct

NO	DESCRIPTION	UNIT	UNIT COST
A	Import Fill for Site Work	CY	
B	Export Soil Removal from Site	CY	
C	Civil Site Concrete Work for Drive Areas and Sidewalks	CY	
D	Concrete Work in Above Slab Work Areas	CY	
E	Concrete for Slab and Foundation Work	CY	

* The Unit Pricing Add/Deduct Section is for the establishment of unit prices in the event that change orders are required.

Submitted by: _____
Contractor: _____
Address: _____
Telephone: _____ Fax: _____
State of Florida Certified General Contractor or Underground Contractor (Required Information)
Licensee: _____ License No: _____

Attachment: Exhibit A - Fire Station ITB 22-BG-06 (2023-R-55 : Fire Station Construction)

SECTION 00 32 00

STATEMENT OF BIDDER'S QUALIFICATIONS

All questions must be answered and the data given must be clear and comprehensive. This statement must be notarized. If necessary, questions may be answered on separate attached sheets. The bidder may submit any additional information he desires.

A. Name of bidder.

B. Permanent main office address.

C. When organized.

D. If a corporation, where incorporated.

E. How many years have you been engaged in the contracting business under your present firm or trade name?

F. Contracts on hand: (Schedule these, showing amount of each contract and the appropriate anticipated dates of completion.)

G. General character of work performed by your company.

H.(1) Have you ever failed to complete any work awarded to you? If so, where and why?

H.(2) Provide list of any lawsuits or judgments filed by or against your company in the last three years, indicating the nature and outcome.

I. Have you ever defaulted on a contract? If so, where and why?

J. List the more important projects recently completed by your company, stating the approximate cost for each and the month and year completed.

K. List your major equipment _____.

L. Experience in construction work similar in type to this project.

M. Background and experience of the principal members of your organization, including the officers.

N. Credit available: $_____

Attachment: Exhibit A - Fire Station ITB 22-BG-06 (2023-R-55 : Fire Station Construction)

O. Give bank reference: _____

P. Will you, upon request, fill out a detailed financial statement and furnish any other information that may be required by the Owner?

Q. The undersigned hereby authorizes and requests any person, firm, or corporation to furnish any information requested by the Owner in verification of the recitals comprising this Statement of Bidder's Qualifications.

Dated at this _____ day of _____, 20____.

_____
Name of Bidder

By: _____
Title

State of _____

County of _____

_____ being duly sworn deposes and says

that he is the _____ of_____and that

the answers to the _____ foregoing questions
Name of Organization

and all statements therein contained are true and correct.

Subscribed and sworn to before me this _____ day of _____, 20____.

_____
Notary Public

_____
Notary Public (Print or Type) My commission expires: _____

Attachment: Exhibit A - Fire Station ITB 22-BG-06 (2023-R-55 : Fire Station Construction)

SECTION *00 33 00*

The Bidder proposes that the following subcontractors are qualified to perform the referenced work and have successfully done so on recent projects similar in nature and size. Upon approval of subcontractors listed the successful bidder shall not substitute subcontractors without approval from the Architect.

SUBCONTRACTOR	COMPANY NAME	REFERENCE
		1) **2)** **3)**
		1) **2)** **3)**
		1) **2)** **3)**
		1) **2)** **3)**
		1) **2)** **3)**
		1) **2)** **3)**

END OF SECTION

Attachment: Exhibit A - Fire Station ITB 22-BG-06 (2023-R-55 : Fire Station Construction)

SECTION 00 33 10
LISTING OF PREVIOUS EXPERIENCE

The bidder proposes that he/she is qualified to perform the referenced work and has successfully done so on recent projects similar in nature and size. A minimum of three (3) projects must be listed below. The Owner reserves the right to check references and confirm information provided herein.

NO.	PROJECT	OWNER	DESCRIPTION/COST	REFERENCE	DATE WORK STARTED & FINISHED MM/YR TO MM/YR
1					
2					
3					

END OF SECTION

Attachment: Exhibit A - Fire Station ITB 22-BG-06 (2023-R-55 : Fire Station Construction)

SECTION 00 47 00

SWORN STATEMENT UNDER SECTION 287.133(3)(a), FLORIDA STATUTES, ON PUBLIC ENTITY CRIMES:

This sworn statement is submitted with Bid, Proposal **or** Contract No. _____ for _____.

This sworn statement is submitted by _____whose business address is _____and (if applicable) its Federal Employer Identification Number (FEIN) is_____. (If the entity has no FEIN, include the Social Security Number of the individual signing this sworn statement: _____.)

My name is _____ any my relationship to the entity named above is _____.

I understand that a "public entity crime" as defined in Paragraph 287.133(g), Florida Statutes, means a violation of any state or federal law by a person with respect to and directly related to the transaction of business with any public entity or with an agency or political subdivision of any other state or with the United States, including, but not limited to, any bid or contract for goods or services to be provided to any public entity or an agency or political subdivision of any other state or of the United States and involving antitrust, fraud, theft, bribery, collusion, racketeering, conspiracy, or material misrepresentation.

I understand that "convicted" or "conviction" as defined in Paragraph 287.133(i)(b), Florida Statutes, means a finding of guilt or a conviction of a public entity crime, with or without an adjudication of guilt, in any federal or state trial court of record relating to charges brought by indictment or information after July 1, 1989, as a result of a jury verdict, nonjury trial, or entry of a plea of guilty or nolo contenders.

I understand that an "affiliate" as defined in Paragraph **287.133(l)(a),** Florida Statutes, means:

1. A predecessor or successor of a person convicted of a public entity crime: or

2. An entity under the control of any natural person who is active in the management of the entity and who has been convicted of a public entity crime. The term "affiliate" includes those officers, directors, executives, partners, shareholders, employees, members, and agents who are active in the management of an affiliate. The ownership by one person of shares constituting a controlling interest in another person, or a pooling of equipment or income among persons when not for fair market value under an arm's length agreement,

Attachment: Exhibit A - Fire Station ITB 22-BG-06 (2023-R-55 : Fire Station Construction)

shall be a prima facie that one person controls another person. A person who knowingly enters into a joint venture with a
person who has been convicted of a public entity crime in Florida during the preceding 36 months shall be considered an affiliate.

I understand that a "person" as defined in Paragraph 287.133(i)(e), Florida Statutes, means any natural person or entity organized under the laws of any state or of the United States with the legal power to enter into a binding contract and which bids or applies to bid on contracts for the provision of goods or services let by a public entity, or which otherwise transacts or applies to transact business with a public entity. The term "person" includes those officers, directors, executives, partners, shareholders, employees, members, and agents who are active in management of an entity.

Based on information and belief, the statement which I have marked below is true in relation to the entity submitting this sworn statement. (Please indicate which statement applies).

____ Neither the entity submitting this sworn statement, nor any officers, directors, executives, partners, shareholders, employees, members or agents who are active in management of the entity, nor any affiliate of the entity have been charged with and convicted of a public entity crime subsequent to July 1, 1989.

____ The entity submitting this sworn statement, or one or more of the officers, directors, executives, partners, shareholders, employees, members, or agents who are active in management of the entity, or an affiliate of the entity has been charged with and convicted of a public entity crime subsequent to July 1, 1989, AND (Please indicate which additional statement applies.)

____ There has been a proceeding concerning the conviction before a hearing officer of the State of Florida, Division of Administrative Hearings. The final order entered by the hearing officer did not place the person or affiliate on the convicted vendor list. (Please attach a copy of the final order.)

_____ The person or affiliate was placed on the convicted vendor list. There has been a subsequent proceeding before a hearing officer of the State of Florida, Division of Administrative Hearings. The final order entered by the hearing officer determined that it was in the public interest to remove the person or affiliate from the convicted vendor list. (Please attach a copy of the final order).

Attachment: Exhibit A - Fire Station ITB 22-BG-06 (2023-R-55 : Fire Station Construction)

(Signature) _____ Date: _____

State of _____County of_____

PERSONALLY APPEARED BEFORE ME, the undersigned authority, _____ who, after first being sworn by me, affixed his/her signature in the space provided above on this _____day of_____, 20__.

_____
Notary Public

My Commission Expires:

Attachment: Exhibit A - Fire Station ITB 22-BG-06 (2023-R-55 : Fire Station Construction)

SECTION 00 48 00
ANTI-COLLUSION STATEMENT

By signing this form, the bidder agrees that this is made without any other understanding, agreement, or connection with any person, corporation, or firm submitting a proposal for the same purpose and that the proposal is in all respects fair and without collusion or fraud.

SIGN in ink in the space provided below. Unsigned bids will be considered incomplete, and will be disqualified, and rejected.

IT IS AGREED BY THE UNDERSIGNED BIDDER THAT THE SIGNING AND DELIVERY OF THE BID REPRESENTS THE BIDDER'S ACCEPTANCE OF THE TERMS AND CONDITIONS OF THE FORGOING SPECIFICATIONS, CONTRACT AND PROVISIONS, AND IF AWARDED, THIS CONTRACT WILL REPRESENT THE AGREEMENT BETWEEN EACH OF THE GOVERNMENTAL PARTIES.

NAME OF FIRM: _____

SIGNED BY: _____
(MUST BE SIGNED BY A COMPANY OFFICER OR AUTHORIZED AGENT)

TITLE: _____

ADDRESS: _____

CITY AND STATE: _____

TELEPHONE: _____

COMPLETION TIME: _____

NO proposals will be withdrawn for a period of ninety (90) days subsequent to the opening of the proposals, without the consent of the City of Holly Hill.

NO BID (REASON) _____

_____

_____

END OF SECTION

Attachment: Exhibit A - Fire Station ITB 22-BG-06 (2023-R-55 : Fire Station Construction)

SECTION 00 48 50
DRUG FREE/TIE PREFERENCE STATEMENT

In the event of a tie bid a preference is given to vendors submitting a certification with their bid/proposal certifying they have a drug-free workplace in accordance with Section 287.087, Florida Statutes. This requirement affects all public entities of the State and becomes effective January 1, 1991. The special conditions are as follow:

IDENTICAL TIE BIDS - Preference shall be given to businesses with drug-free workplace programs. Whenever two or more bids which are equal with respect to price, quality, and service are received by the State or by any political subdivision for the procurement of commodities or contractual services, a bid received from a business that certifies that it has implemented a drugfree workplace program shall be given preference in the award process. Established procedures for processing tie bids will be followed if none of the tied vendors have a drug-free workplace program. In order to have a drug-free workplace program, a business shall:

1. Publish a statement notifying employees that the unlawful manufacture, distribution, dispensing, possession, or use of a controlled substance is prohibited in the workplace and specifying the actions that will be taken against employees for violations of such prohibition.

2. Inform employees about the dangers of drug abuse in the workplace, the business's policy of maintaining a drug-free workplace, any available drug counseling, rehabilitation and employee assistance programs, and the penalties that may be imposed upon employees for drug abuse violations.

3. Give each employee engaged in providing the commodities or contractual services that are under bid a copy of the statement specified in subsection (1).

4. In the statement specified in subsection (1), notify the employees that, as a condition of working on the commodities or contractual services that are under bid, the employee will abide by the terms of the statement and will notify the employer of any conviction or, or plea of guilty or nolo contendere to, any violation of chapter 893 or of any controlled substance law of the United States or any state, for a violation occurring in the workplace no later than five (5) days after such conviction.

5. Impose a sanction on, or require the satisfaction participation in a drug abuse assistance or rehabilitation program if such is available in the employee's community, by any employee who is so convicted.

6. Make a good faith effort to continue to maintain a drug-free workplace through implementation of this section.

As the person authorized to sign the statement, I certify that this firm complies fully with the above requirements.

_____

VENDOR'S SIGNATURE

END OF SECTION

Attachment: Exhibit A - Fire Station ITB 22-BG-06 (2023-R-55 : Fire Station Construction)

SECTION 00 48 60

COMPLIANCE WITH THE PUBLIC RECORDS LAW

Project Number: ITB # 22-BG-06

Upon award recommendation or ten (10) days after opening, submittals become "public records" and shall be subject to public disclosure consistent with Chapter 119, Florida Statutes. Proposers must invoke the exemptions to disclosure provided by law in the response to the solicitation, and must identify the data or other materials to be protected, and must state the reasons why such exclusion from public disclosure is necessary. The submission of a proposal authorizes release of your firm's credit data to the CITY.

If the company submits information exempt from public disclosure, the company must identify with specificity which pages/paragraphs of their bid/proposal package are exempt from the Public Records Act, identifying the specific exemption section that applies to each. The protected information must be submitted to the CITY in a separate envelope marked accordingly.

IF THE CONTRACTOR HAS QUESTIONS REGARDING THE APPLICATION OF CHAPTER 119, FLORIDA STATUTES, TO THE CONTRACTOR'S DUTY TO PROVIDE PUBLIC RECORDS RELATING TO THIS CONTRACT, CONTACT THE CUSTODIAN OF PUBLIC RECORDS AT

Valerie Manning, City Clerk
386-248-9441
vmanning@hollyhillfl.org
1065 Ridgewood Ave
Holly Hill, FL 32117

A provision that requires the contractor to comply with public records laws, specifically to:

1. Keep and maintain public records required by the public agency to perform the service.
2. Upon request from the public agency's custodian of public records, provide the public agency with a copy of the requested records or allow the records to be inspected or copied within a reasonable time at a cost that does not exceed the cost provided in this chapter or as otherwise provided by law.
3. Ensure that public records that are exempt or confidential and exempt from public records disclosure requirements are not disclosed except as authorized by law for the duration of the contract term and following completion of the contract if the contractor does not transfer the records to the public agency.
4. Upon completion of the contract, transfer, at no cost, to the public agency all public records in possession of the contractor or keep and maintain public records required by the public agency to perform the service. If the contractor transfers all public records to the public agency upon completion of the contract, the contractor shall destroy any duplicate public records that are exempt or confidential and exempt from public records disclosure requirements. If the contractor keeps and maintains public records upon completion of the contract, the contractor shall meet all applicable requirements for retaining public records. All records stored electronically must be provided to the public agency, upon request from the public agency's custodian of public records, in a format that is compatible with the information technology systems of the public agency.

By submitting a response to this solicitation, the company agrees to defend the CITY in the event we are forced to litigate the public records status of the company's documents.

Company Name: _____

Authorized representative (printed): _____

Authorized representative (signature): _____

Date: _____

END OF SECTION

Attachment: Exhibit A - Fire Station ITB 22-BG-06 (2023-R-55 : Fire Station Construction)

SECTION 00 48 70

Form **W-9**
(Rev. October 2018)
Department of the Treasury
Internal Revenue Service

Request for Taxpayer Identification Number and Certification

▸ Go to *www.irs.gov/FormW9* for instructions and the latest information.

Give Form to the requester. Do not send to the IRS.

Print or type. See **specific instructions** on page 3.

1 Name (as shown on your income tax return). Name is required on this line; do not leave this line blank.

2 Business name/disregarded entity name, if different from above

3 Check appropriate box for federal tax classification of the person whose name is entered on line 1. Check only **one** of the following seven boxes.

☐ Individual/sole proprietor or single-member LLC ☐ C Corporation ☐ S Corporation ☐ Partnership ☐ Trust/estate

☐ Limited liability company. Enter the tax classification (C=C corporation, S=S corporation, P=Partnership) ▸ _____

Note: Check the appropriate box in the line above for the tax classification of the single-member owner. Do not check LLC if the LLC is classified as a single-member LLC that is disregarded from the owner unless the owner of the LLC is another LLC that is **not** disregarded from the owner for U.S. federal tax purposes. Otherwise, a single-member LLC that is disregarded from the owner should check the appropriate box for the tax classification of its owner.

☐ Other (see instructions) ▸

4 Exemptions (codes apply only t certain entities, not individuals; se instructions on page 3):

Exempt payee code (if any) _____

Exemption from FATCA reporting code (if any) _____

(Applies to accounts maintained outside the U.S.

5 Address (number, street, and apt. or suite no.) See instructions.

Requester's name and address (optional)

6 City, state, and ZIP code

7 List account number(s) here (optional)

Part I Taxpayer Identification Number (TIN)

Enter your TIN in the appropriate box. The TIN provided must match the name given on line 1 to avoid backup withholding. For individuals, this is generally your social security number (SSN). However, for a resident alien, sole proprietor, or disregarded entity, see the instructions for Part I, later. For other entities, it is your employer identification number (EIN). If you do not have a number, see *How to get a TIN*, later.

Note: If the account is in more than one name, see the instructions for line 1. Also see *What Name and Number To Give the Requester* for guidelines on whose number to enter.

Social security number

			–			–		

or

Employer identification number

		–						

Part II Certification

Under penalties of perjury, I certify that:

1. The number shown on this form is my correct taxpayer identification number (or I am waiting for a number to be issued to me); and
2. I am not subject to backup withholding because: (a) I am exempt from backup withholding, or (b) I have not been notified by the Internal Revenue Service (IRS) that I am subject to backup withholding as a result of a failure to report all interest or dividends, or (c) the IRS has notified me that I ar no longer subject to backup withholding; and
3. I am a U.S. citizen or other U.S. person (defined below); and
4. The FATCA code(s) entered on this form (if any) indicating that I am exempt from FATCA reporting is correct.

Certification instructions. You must cross out item 2 above if you have been notified by the IRS that you are currently subject to backup withholding becau you have failed to report all interest and dividends on your tax return. For real estate transactions, item 2 does not apply. For mortgage interest paid, acquisition or abandonment of secured property, cancellation of debt, contributions to an individual retirement arrangement (IRA), and generally, payments other than interest and dividends, you are not required to sign the certification, but you must provide your correct TIN. See the instructions for Part II, later.

Sign Here | **Signature of U.S. person** ▸ | **Date** ▸

General Instructions

Section references are to the Internal Revenue Code unless otherwise noted.

Future developments. For the latest information about developments related to Form W-9 and its instructions, such as legislation enacted after they were published, go to *www.irs.gov/FormW9*.

Purpose of Form

An individual or entity (Form W-9 requester) who is required to file an information return with the IRS must obtain your correct taxpayer identification number (TIN) which may be your social security number (SSN), individual taxpayer identification number (ITIN), adoption taxpayer identification number (ATIN), or employer identification number (EIN), to report on an information return the amount paid to you, or other amount reportable on an information return. Examples of information returns include, but are not limited to, the following.

- Form 1099-INT (interest earned or paid)
- Form 1099-DIV (dividends, including those from stocks or mutual funds)
- Form 1099-MISC (various types of income, prizes, awards, or gross proceeds)
- Form 1099-B (stock or mutual fund sales and certain other transactions by brokers)
- Form 1099-S (proceeds from real estate transactions)
- Form 1099-K (merchant card and third party network transactions)
- Form 1098 (home mortgage interest), 1098-E (student loan interest), 1098-T (tuition)
- Form 1099-C (canceled debt)
- Form 1099-A (acquisition or abandonment of secured property)

Use Form W-9 only if you are a U.S. person (including a resident alien), to provide your correct TIN.

If you do not return Form W-9 to the requester with a TIN, you might be subject to backup withholding. See What is backup withholding, *later.*

Attachment: Exhibit A - Fire Station ITB 22-BG-06 (2023-R-55 : Fire Station Construction)

By signing the filled-out form, you:

1. Certify that the TIN you are giving is correct (or you are waiting for a number to be issued),

2. Certify that you are not subject to backup withholding, or

3. Claim exemption from backup withholding if you are a U.S. exempt payee. If applicable, you are also certifying that as a U.S. person, your allocable share of any partnership income from a U.S. trade or business is not subject to the withholding tax on foreign partners' share of effectively connected income, and

4. Certify that FATCA code(s) entered on this form (if any) indicating that you are exempt from the FATCA reporting, is correct. See *What is FATCA reporting*, later, for further information.

Note: If you are a U.S. person and a requester gives you a form other than Form W-9 to request your TIN, you must use the requester's form if it is substantially similar to this Form W-9.

Definition of a U.S. person. For federal tax purposes, you are considered a U.S. person if you are:

- An individual who is a U.S. citizen or U.S. resident alien;
- A partnership, corporation, company, or association created or organized in the United States or under the laws of the United States;
- An estate (other than a foreign estate); or
- A domestic trust (as defined in Regulations section 301.7701-7).

Special rules for partnerships. Partnerships that conduct a trade or business in the United States are generally required to pay a withholding tax under section 1446 on any foreign partners' share of effectively connected taxable income from such business. Further, in certain cases where a Form W-9 has not been received, the rules under section 1446 require a partnership to presume that a partner is a foreign person, and pay the section 1446 withholding tax. Therefore, if you are a U.S. person that is a partner in a partnership conducting a trade or business in the United States, provide Form W-9 to the partnership to establish your U.S. status and avoid section 1446 withholding on your share of partnership income.

In the cases below, the following person must give Form W-9 to the partnership for purposes of establishing its U.S. status and avoiding withholding on its allocable share of net income from the partnership conducting a trade or business in the United States.

- In the case of a disregarded entity with a U.S. owner, the U.S. owner of the disregarded entity and not the entity;
- In the case of a grantor trust with a U.S. grantor or other U.S. owner, generally, the U.S. grantor or other U.S. owner of the grantor trust and not the trust; and
- In the case of a U.S. trust (other than a grantor trust), the U.S. trust (other than a grantor trust) and not the beneficiaries of the trust.

Foreign person. If you are a foreign person or the U.S. branch of a foreign bank that has elected to be treated as a U.S. person, do not use Form W-9. Instead, use the appropriate Form W-8 or Form 8233 (see Pub. 515, Withholding of Tax on Nonresident Aliens and Foreign Entities).

Nonresident alien who becomes a resident alien. Generally, only a nonresident alien individual may use the terms of a tax treaty to reduce or eliminate U.S. tax on certain types of income. However, most tax treaties contain a provision known as a "saving clause." Exceptions specified in the saving clause may permit an exemption from tax to continue for certain types of income even after the payee has otherwise become a U.S. resident alien for tax purposes.

If you are a U.S. resident alien who is relying on an exception contained in the saving clause of a tax treaty to claim an exemption from U.S. tax on certain types of income, you must attach a statement to Form W-9 that specifies the following five items.

1. The treaty country. Generally, this must be the same treaty under which you claimed exemption from tax as a nonresident alien.

2. The treaty article addressing the income.

3. The article number (or location) in the tax treaty that contains the saving clause and its exceptions.

4. The type and amount of income that qualifies for the exemption from tax.

5. Sufficient facts to justify the exemption from tax under the terms of the treaty article.

Example. Article 20 of the U.S.-China income tax treaty allows an exemption from tax for scholarship income received by a Chinese student temporarily present in the United States. Under U.S. law, this student will become a resident alien for tax purposes if his or her stay in the United States exceeds 5 calendar years. However, paragraph 2 of the first Protocol to the U.S.-China treaty (dated April 30, 1984) allows the provisions of Article 20 to continue to apply even after the Chinese student becomes a resident alien of the United States. A Chinese student who qualifies for this exception (under paragraph 2 of the first protocol) and is relying on this exception to claim an exemption from tax on his or her scholarship or fellowship income would attach to Form W-9 a statement that includes the information described above to support that exemption.

If you are a nonresident alien or a foreign entity, give the requester the appropriate completed Form W-8 or Form 8233.

Backup Withholding

What is backup withholding? Persons making certain payments to you must under certain conditions withhold and pay to the IRS 24% of such payments. This is called "backup withholding." Payments that may be subject to backup withholding include interest, tax-exempt interest, dividends, broker and barter exchange transactions, rents, royalties, nonemployee pay, payments made in settlement of payment card and third party network transactions, and certain payments from fishing boat operators. Real estate transactions are not subject to backup withholding.

You will not be subject to backup withholding on payments you receive if you give the requester your correct TIN, make the proper certifications, and report all your taxable interest and dividends on your tax return.

Payments you receive will be subject to backup withholding if:

1. You do not furnish your TIN to the requester,

2. You do not certify your TIN when required (see the instructions for Part II for details),

3. The IRS tells the requester that you furnished an incorrect TIN,

4. The IRS tells you that you are subject to backup withholding because you did not report all your interest and dividends on your tax return (for reportable interest and dividends only), or

5. You do not certify to the requester that you are not subject to backup withholding under 4 above (for reportable interest and dividend accounts opened after 1983 only).

Certain payees and payments are exempt from backup withholding. See *Exempt payee code*, later, and the separate Instructions for the Requester of Form W-9 for more information.

Also see *Special rules for partnerships*, earlier.

What is FATCA Reporting?

The Foreign Account Tax Compliance Act (FATCA) requires a participating foreign financial institution to report all United States account holders that are specified United States persons. Certain payees are exempt from FATCA reporting. See *Exemption from FATCA reporting code*, later, and the Instructions for the Requester of Form W-9 for more information.

Updating Your Information

You must provide updated information to any person to whom you claimed to be an exempt payee if you are no longer an exempt payee and anticipate receiving reportable payments in the future from this person. For example, you may need to provide updated information if you are a C corporation that elects to be an S corporation, or if you no longer are tax exempt. In addition, you must furnish a new Form W-9 if the name or TIN changes for the account; for example, if the grantor of a grantor trust dies.

Penalties

Failure to furnish TIN. If you fail to furnish your correct TIN to a requester, you are subject to a penalty of $50 for each such failure unless your failure is due to reasonable cause and not to willful neglect.

Civil penalty for false information with respect to withholding. If you make a false statement with no reasonable basis that results in no backup withholding, you are subject to a $500 penalty.

Attachment: Exhibit A - Fire Station ITB 22-BG-06 (2023-R-55 : Fire Station Construction)

Criminal penalty for falsifying information. Willfully falsifying certifications or affirmations may subject you to criminal penalties including fines and/or imprisonment.

Misuse of TINs. If the requester discloses or uses TINs in violation of federal law, the requester may be subject to civil and criminal penalties.

Specific Instructions

Line 1

You must enter one of the following on this line; **do not** leave this line blank. The name should match the name on your tax return.

If this Form W-9 is for a joint account (other than an account maintained by a foreign financial institution (FFI)), list first, and then circle, the name of the person or entity whose number you entered in Part I of Form W-9. If you are providing Form W-9 to an FFI to document a joint account, each holder of the account that is a U.S. person must provide a Form W-9.

a. **Individual.** Generally, enter the name shown on your tax return. If you have changed your last name without informing the Social Security Administration (SSA) of the name change, enter your first name, the last name as shown on your social security card, and your new last name.

Note: ITIN applicant: Enter your individual name as it was entered on your Form W-7 application, line 1a. This should also be the same as the name you entered on the Form 1040/1040A/1040EZ you filed with your application.

b. **Sole proprietor or single-member LLC.** Enter your individual name as shown on your 1040/1040A/1040EZ on line 1. You may enter your business, trade, or "doing business as" (DBA) name on line 2.

c. **Partnership, LLC that is not a single-member LLC, C corporation, or S corporation.** Enter the entity's name as shown on the entity's tax return on line 1 and any business, trade, or DBA name on line 2.

d. **Other entities.** Enter your name as shown on required U.S. federal tax documents on line 1. This name should match the name shown on the charter or other legal document creating the entity. You may enter any business, trade, or DBA name on line 2.

e. **Disregarded entity.** For U.S. federal tax purposes, an entity that is disregarded as an entity separate from its owner is treated as a "disregarded entity." See Regulations section 301.7701-2(c)(2)(iii). Enter the owner's name on line 1. The name of the entity entered on line 1 should never be a disregarded entity. The name on line 1 should be the name shown on the income tax return on which the income should be reported. For example, if a foreign LLC that is treated as a disregarded entity for U.S. federal tax purposes has a single owner that is a U.S. person, the U.S. owner's name is required to be provided on line 1. If the direct owner of the entity is also a disregarded entity, enter the first owner that is not disregarded for federal tax purposes. Enter the disregarded entity's name on line 2, "Business name/disregarded entity name." If the owner of the disregarded entity is a foreign person, the owner must complete an appropriate Form W-8 instead of a Form W-9. This is the case even if the foreign person has a U.S. TIN.

Line 2

If you have a business name, trade name, DBA name, or disregarded entity name, you may enter it on line 2.

Line 3

Check the appropriate box on line 3 for the U.S. federal tax classification of the person whose name is entered on line 1. Check only one box on line 3.

IF the entity/person on line 1 is a(n) . . .	THEN check the box for . . .
• Corporation	Corporation
• Individual • Sole proprietorship, or • Single-member limited liability company (LLC) owned by an individual and disregarded for U.S. federal tax purposes.	Individual/sole proprietor or singl member LLC
• LLC treated as a partnership for U.S. federal tax purposes, • LLC that has filed Form 8832 or 2553 to be taxed as a corporation, or • LLC that is disregarded as an entity separate from its owner but the owner is another LLC that is not disregarded for U.S. federal tax purposes.	Limited liability company and ent the appropriate tax classification (P= Partnership; C= C corporatic or S= S corporation)
• Partnership	Partnership
• Trust/estate	Trust/estate

Line 4, Exemptions

If you are exempt from backup withholding and/or FATCA reporting, enter in the appropriate space on line 4 any code(s) that may apply to you.

Exempt payee code.

- Generally, individuals (including sole proprietors) are not exempt fro backup withholding.
- Except as provided below, corporations are exempt from backup withholding for certain payments, including interest and dividends.
- Corporations are not exempt from backup withholding for payments made in settlement of payment card or third party network transactions
- Corporations are not exempt from backup withholding with respect t attorneys' fees or gross proceeds paid to attorneys, and corporations that provide medical or health care services are not exempt with respe to payments reportable on Form 1099-MISC.

The following codes identify payees that are exempt from backup withholding. Enter the appropriate code in the space in line 4.

1—An organization exempt from tax under section 501(a), any IRA, o a custodial account under section 403(b)(7) if the account satisfies the requirements of section 401(f)(2)

2—The United States or any of its agencies or instrumentalities 3—

A state, the District of Columbia, a U.S. commonwealth or possession, or any of their political subdivisions or instrumentalities

4—A foreign government or any of its political subdivisions, agencies or instrumentalities

5—A corporation

6—A dealer in securities or commodities required to register in the United States, the District of Columbia, or a U.S. commonwealth or possession

7—A futures commission merchant registered with the Commodity Futures Trading Commission

8—A real estate investment trust

9—An entity registered at all times during the tax year under the Investment Company Act of 1940

10—A common trust fund operated by a bank under section 584(a)

11—A financial institution

12—A middleman known in the investment community as a nominee o custodian

13—A trust exempt from tax under section 664 or described in section 4947

Attachment: Exhibit A - Fire Station ITB 22-BG-06 (2023-R-55 : Fire Station Construction)

The following chart shows types of payments that may be exempt from backup withholding. The chart applies to the exempt payees listed above, 1 through 13.

IF the payment is for . . .	THEN the payment is exempt for . . .
Interest and dividend payments	All exempt payees except for 7
Broker transactions	Exempt payees 1 through 4 and 6 through 11 and all C corporations. S corporations must not enter an exempt payee code because they are exempt only for sales of noncovered securities acquired prior to 2012.
Barter exchange transactions and patronage dividends	Exempt payees 1 through 4
Payments over $600 required to be reported and direct sales over $5,000[1]	Generally, exempt payees 1 through 5[2]
Payments made in settlement of payment card or third party network transactions	Exempt payees 1 through 4

[1] See Form 1099-MISC, Miscellaneous Income, and its instructions.

[2] However, the following payments made to a corporation and reportable on Form 1099-MISC are not exempt from backup withholding: medical and health care payments, attorneys' fees, gross proceeds paid to an attorney reportable under section 6045(f), and payments for services paid by a federal executive agency.

Exemption from FATCA reporting code. The following codes identify payees that are exempt from reporting under FATCA. These codes apply to persons submitting this form for accounts maintained outside of the United States by certain foreign financial institutions. Therefore, if you are only submitting this form for an account you hold in the United States, you may leave this field blank. Consult with the person requesting this form if you are uncertain if the financial institution is subject to these requirements. A requester may indicate that a code is not required by providing you with a Form W-9 with "Not Applicable" (or any similar indication) written or printed on the line for a FATCA exemption code.

A—An organization exempt from tax under section 501(a) or any individual retirement plan as defined in section 7701(a)(37)

B—The United States or any of its agencies or instrumentalities C—

A state, the District of Columbia, a U.S. commonwealth or possession, or any of their political subdivisions or instrumentalities

D—A corporation the stock of which is regularly traded on one or more established securities markets, as described in Regulations section 1.1472-1(c)(1)(i)

E—A corporation that is a member of the same expanded affiliated group as a corporation described in Regulations section 1.1472-1(c)(1)(i)

F—A dealer in securities, commodities, or derivative financial instruments (including notional principal contracts, futures, forwards, and options) that is registered as such under the laws of the United States or any state

G—A real estate investment trust

H—A regulated investment company as defined in section 851 or an entity registered at all times during the tax year under the Investment Company Act of 1940

I—A common trust fund as defined in section 584(a) J—

A bank as defined in section 581

K—A broker

L—A trust exempt from tax under section 664 or described in section 4947(a)(1)

M—A tax exempt trust under a section 403(b) plan or section 457(g) plan

Note: You may wish to consult with the financial institution requesting this form to determine whether the FATCA code and/or exempt payee code should be completed.

Line 5

Enter your address (number, street, and apartment or suite number). This is where the requester of this Form W-9 will mail your information returns. If this address differs from the one the requester already has or file, write NEW at the top. If a new address is provided, there is still a chance the old address will be used until the payor changes your address in their records.

Line 6

Enter your city, state, and ZIP code.

Part I. Taxpayer Identification Number (TIN)

Enter your TIN in the appropriate box. If you are a resident alien and you do not have and are not eligible to get an SSN, your TIN is your IRS individual taxpayer identification number (ITIN). Enter it in the social security number box. If you do not have an ITIN, see *How to get a TIN* below.

If you are a sole proprietor and you have an EIN, you may enter either your SSN or EIN.

If you are a single-member LLC that is disregarded as an entity separate from its owner, enter the owner's SSN (or EIN, if the owner has one). Do not enter the disregarded entity's EIN. If the LLC is classified as a corporation or partnership, enter the entity's EIN.

Note: See *What Name and Number To Give the Requester,* later, for further clarification of name and TIN combinations.

How to get a TIN. If you do not have a TIN, apply for one immediately. To apply for an SSN, get Form SS-5, Application for a Social Security Card, from your local SSA office or get this form online at *www.SSA.gov*. You may also get this form by calling 1-800-772-1213. Use Form W-7, Application for IRS Individual Taxpayer Identification Number, to apply for an ITIN, or Form SS-4, Application for Employer Identification Number, to apply for an EIN. You can apply for an EIN online by accessing the IRS website at *www.irs.gov/Businesses* and clicking on Employer Identification Number (EIN) under Starting a Business. Go to *www.irs.gov/Forms* to view, download, or print Form W-7 and/or Form SS-4. Or, you can go to *www.irs.gov/OrderForms* to place an order and have Form W-7 and/or SS-4 mailed to you within 10 business days.

If you are asked to complete Form W-9 but do not have a TIN, apply for a TIN and write "Applied For" in the space for the TIN, sign and date the form, and give it to the requester. For interest and dividend payments, and certain payments made with respect to readily tradable instruments, generally you will have 60 days to get a TIN and give it to the requester before you are subject to backup withholding on payments. The 60-day rule does not apply to other types of payments. You will be subject to backup withholding on all such payments until you provide your TIN to the requester.

Note: Entering "Applied For" means that you have already applied for a TIN or that you intend to apply for one soon.

Caution: A disregarded U.S. entity that has a foreign owner must use the appropriate Form W-8.

Part II. Certification

To establish to the withholding agent that you are a U.S. person, or resident alien, sign Form W-9. You may be requested to sign by the withholding agent even if item 1, 4, or 5 below indicates otherwise.

For a joint account, only the person whose TIN is shown in Part I should sign (when required). In the case of a disregarded entity, the person identified on line 1 must sign. Exempt payees, see *Exempt payee code*, earlier.

Signature requirements. Complete the certification as indicated in items 1 through 5 below.

Attachment: Exhibit A - Fire Station ITB 22-BG-06 (2023-R-55 : Fire Station Construction)

1. Interest, dividend, and barter exchange accounts opened before 1984 and broker accounts considered active during 1983. You must give your correct TIN, but you do not have to sign the certification.

2. Interest, dividend, broker, and barter exchange accounts opened after 1983 and broker accounts considered inactive during 1983. You must sign the certification or backup withholding will apply. If you are subject to backup withholding and you are merely providing your correct TIN to the requester, you must cross out item 2 in the certification before signing the form.

3. Real estate transactions. You must sign the certification. You may cross out item 2 of the certification.

4. Other payments. You must give your correct TIN, but you do not have to sign the certification unless you have been notified that you have previously given an incorrect TIN. "Other payments" include payments made in the course of the requester's trade or business for rents, royalties, goods (other than bills for merchandise), medical and health care services (including payments to corporations), payments to a nonemployee for services, payments made in settlement of payment card and third party network transactions, payments to certain fishing boat crew members and fishermen, and gross proceeds paid to attorneys (including payments to corporations).

5. Mortgage interest paid by you, acquisition or abandonment of secured property, cancellation of debt, qualified tuition program payments (under section 529), ABLE accounts (under section 529A), IRA, Coverdell ESA, Archer MSA or HSA contributions or distributions, and pension distributions. You must give your correct TIN, but you do not have to sign the certification.

What Name and Number To Give the Requester

For this type of account:	Give name and SSN of:
1. Individual	The individual
2. Two or more individuals (joint account) other than an account maintained by an FFI	The actual owner of the account or, if combined funds, the first individual on the account[1]
3. Two or more U.S. persons (joint account maintained by an FFI)	Each holder of the account
4. Custodial account of a minor (Uniform Gift to Minors Act)	The minor[2]
5. a. The usual revocable savings trust (grantor is also trustee)	The grantor-trustee[1]
b. So-called trust account that is not a legal or valid trust under state law	The actual owner[1]
6. Sole proprietorship or disregarded entity owned by an individual	The owner[3]
7. Grantor trust filing under Optional Form 1099 Filing Method 1 (see Regulations section 1.671-4(b)(2)(i)(A))	The grantor*
For this type of account:	**Give name and EIN of:**
8. Disregarded entity not owned by an individual	The owner
9. A valid trust, estate, or pension trust	Legal entity[4]
10. Corporation or LLC electing corporate status on Form 8832 or Form 2553	The corporation
11. Association, club, religious, charitable, educational, or other tax-exempt organization	The organization
12. Partnership or multi-member LLC	The partnership
13. A broker or registered nominee	The broker or nominee
14. Account with the Department of Agriculture in the name of a public entity (such as a state or local government, school district, or prison) that receives agricultural program payments	The public entity
15. Grantor trust filing under the Form 1041 Filing Method or the Optional Form 1099 Filing Method 2 (see Regulations section 1.671-4(b)(2)(i)(B))	The trust

[1] List first and circle the name of the person whose number you furnish. If only one person on a joint account has an SSN, that person's numb must be furnished.

[2] Circle the minor's name and furnish the minor's SSN.

[3] You must show your individual name and you may also enter your business or DBA name on the "Business name/disregarded entity" name line. You may use either your SSN or EIN (if you have one), but t IRS encourages you to use your SSN.

[4] List first and circle the name of the trust, estate, or pension trust. (Do not furnish the TIN of the personal representative or trustee unless the legal entity itself is not designated in the account title.) Also see *Speci rules for partnerships*, earlier.

***Note:** The grantor also must provide a Form W-9 to trustee of trust.

Note: If no name is circled when more than one name is listed, the number will be considered to be that of the first name listed.

Secure Your Tax Records From Identity Thef

Identity theft occurs when someone uses your personal information such as your name, SSN, or other identifying information, without your permission, to commit fraud or other crimes. An identity thief may use your SSN to get a job or may file a tax return using your SSN to receiv a refund.

To reduce your risk:

- Protect your SSN,
- Ensure your employer is protecting your SSN, and
- Be careful when choosing a tax preparer.

If your tax records are affected by identity theft and you receive a notice from the IRS, respond right away to the name and phone numb printed on the IRS notice or letter.

If your tax records are not currently affected by identity theft but you think you are at risk due to a lost or stolen purse or wallet, questionabl credit card activity or credit report, contact the IRS Identity Theft Hotlin at 1-800-908-4490 or submit Form 14039.

For more information, see Pub. 5027, Identity Theft Information for Taxpayers.

Victims of identity theft who are experiencing economic harm or a systemic problem, or are seeking help in resolving tax problems that have not been resolved through normal channels, may be eligible for Taxpayer Advocate Service (TAS) assistance. You can reach TAS by calling the TAS toll-free case intake line at 1-877-777-4778 or TTY/TDI 1-800-829-4059.

Protect yourself from suspicious emails or phishing schemes. Phishing is the creation and use of email and websites designed to mimic legitimate business emails and websites. The most common act is sending an email to a user falsely claiming to be an established legitimate enterprise in an attempt to scam the user into surrendering private information that will be used for identity theft.

Attachment: Exhibit A - Fire Station ITB 22-BG-06 (2023-R-55 : Fire Station Construction)

The IRS does not initiate contacts with taxpayers via emails. Also, the IRS does not request personal detailed information through email or ask taxpayers for the PIN numbers, passwords, or similar secret access information for their credit card, bank, or other financial accounts.

If you receive an unsolicited email claiming to be from the IRS, forward this message to *phishing@irs.gov*. You may also report misuse of the IRS name, logo, or other IRS property to the Treasury Inspector General for Tax Administration (TIGTA) at 1-800-366-4484. You can forward suspicious emails to the Federal Trade Commission at *spam@uce.gov* or report them at *www.ftc.gov/complaint*. You can contact the FTC at *www.ftc.gov/idtheft* or 877-IDTHEFT (877-438-4338). If you have been the victim of identity theft, see *www.IdentityTheft.gov* and Pub. 5027.

Visit *www.irs.gov/IdentityTheft* to learn more about identity theft and how to reduce your risk.

Privacy Act Notice

Section 6109 of the Internal Revenue Code requires you to provide your correct TIN to persons (including federal agencies) who are required to file information returns with the IRS to report interest, dividends, or certain other income paid to you; mortgage interest you paid; the acquisition or abandonment of secured property; the cancellation of debt; or contributions you made to an IRA, Archer MSA, or HSA. The person collecting this form uses the information on the form to file information returns with the IRS, reporting the above information. Routine uses of this information include giving it to the Department of Justice for civil and criminal litigation and to cities, states, the District of Columbia, and U.S. commonwealths and possessions for use in administering their laws. The information also may be disclosed to other countries under a treaty, to federal and state agencies to enforce civil and criminal laws, or to federal law enforcement and intelligence agencies to combat terrorism. You must provide your TIN whether or not you are required to file a tax return. Under section 3406, payers must generally withhold a percentage of taxable interest, dividend, and certain other payments to a payee who does not give a TIN to the payer. Certain penalties may also apply for providing false or fraudulent information.

Attachment: Exhibit A - Fire Station ITB 22-BG-06 (2023-R-55 : Fire Station Construction)

END OF SECTION

SECTION 00 48 80

E-VERIFY COMPLIANCE

Affidavit of E-Verify Requirements
Compliance

ITB 22-BG-06

The Consultant/Contractor agrees to comply with Section 448.093, Florida Statutes, and to incorporate in all subcontracts the obligation to comply with Section 448.093, Florida Statutes.

1. The Consultant/Contractor shall utilize the U.S. Department of Homeland Security's E-Verify system to verify the employment eligibility of all new employees hired by the Consultant/Contractor during the term of the Agreement and shall expressly require any subcontractors performing work or providing services pursuant to the Agreement to likewise utilize the U.S. Department of Homeland Security's E-Verify system to verify the employment eligibility of all new employees hired by the subconsultant/subcontractor during the Agreement term.

2. That the Consultant/Contractor understands and agrees that its failure to comply with the verification requirements as set forth herein or its failure to ensure that all employees and subconsultant/subcontractors performing work under this Agreement are legally authorized to work in the United States and the State of Florida constitute a breach of this Agreement for which the City may immediately terminate the Agreement without notice and without penalty. The Consultant/Contractor further understands and agrees that in the event of such termination, the Consultant/Contractor shall be liable to the City for any costs incurred by the City as a result of the Consultant's/Contractor's breach

Consultant/Contractor shall execute and return the Affidavit of E-Verify Requirements Compliance to City. IN WITNESS WHEREOF, the parties have made and executed this Agreement for the purposes stated above.

Consultant/Contractor Name and Address	Signature
	Name and Title

Attachment: Exhibit A - Fire Station ITB 22-BG-06 (2023-R-55 : Fire Station Construction)

SECTION 00 50 00

AGREEMENT

THIS AGREEMENT, entered into this ____ day of _____, 20__, by the City of Holly Hill, Florida, hereinafter called the OWNER, Party of the First Part, and a CORPORATION known as _____organized and existing under the laws of the State of_____; PARTNERSHIP known as _____ consisting of the following members: _____ an INDIVIDUAL _____trading as_____ of _____City_____State of_____ Zip Code _____, hereinafter called the CONTRACTOR, Party of the Second Part.

WITNESSETH: That the parties hereto do mutually agree as follows:

ARTICLE I.

A. The Contractor agrees to furnish all labor, materials, equipment for:

FIRE STATION CONSTRUCTION

herein called for, in strict accordance with the Drawings and Specifications prepared by Hall & Ogle Architects, Inc., which Contract include, but is not limited to, the following Contract Documents:

a. Invitation
b. Instructions
c. Proposal
d. This Agreement
e. Insurance
f. Specifications
g. Addenda (if any)
h. Drawings

ARTICLE II.

A. The Contractor agrees that the work shall be started not later than the date indicated in the Notice to Proceed and that all work shall be completed within **365 days.**

B. The Contractor further agrees that for each calendar day, with the exception of Sundays and legal holidays, which any work shall remain uncompleted after the stations completion times stipulated above, the sum of **$500 (FIVE HUNDRED DOLLARS)** shall be deducted from monies due the Contractor, not as a penalty, but as liquidated damages. If the Contractor is declared in default in accordance with the provisions of the Specifications, liquidated damages shall be charged as provided herein, and such amounts shall be deducted from the final amount payable to the Contractor or his Surety. Should the total amount chargeable as liquidated

Attachment: Exhibit A - Fire Station ITB 22-BG-06 (2023-R-55 : Fire Station Construction)

damages exceed the amount due or payable to the Contractor or his Surety, then such excess shall be paid to the Owner by the Contractor or his Surety.

ARTICLE III.

A. The Contractor shall receive and accept the compensation for the performance of the Contract (subject to additions or deductions noted therein) in accordance with the prices stipulated in the Proposal, and in the manner provided in Article IV for the Contract Price of $_____ and for additions or revisions approved in Change Orders at Unit Prices.

ARTICLE IV.

A. Payment to the Contractor shall be made as follows:

1. Not later than the fifteenth (15th) day of each calendar month, the Owner will make a partial payment to the Contractor on the basis of a duly certified and approved estimate by the Engineer of the work performed during the preceding calendar month under this Contract, and (at the option of the City) an amount equal to 50% of materials and equipment not incorporated in the work but delivered and suitably stored. When payment to the Contractor is made for stored materials and equipment, Contractor shall submit invoices marked paid by the supplier with the next month's request for payment to document that Contractor has paid for said materials and equipment or the previously paid amount for stored materials shall be deducted from any remaining payment(s) for any stored materials not so properly documented. To insure the proper performance of this Contract, the Owner will retain ten percent (5%) of the amount of each estimate.

2. .

2. Upon completion of the entire work under Contract, the Engineer shall make a final inspection and certify such completion to the Owner. Upon approval of the completion certificate by the Owner, the Owner shall notify the Contractor and the Surety of the satisfactory completion of the work and except as otherwise provided in the Specifications, final payment therefore shall be made to the Contractor within thirty (30) days after written acceptance by the Contractor of the final certificate computation. ARTICLE V.

A. The Contract shall not sublet, sell, transfer, assign, or otherwise dispose of the Contract or any portion thereof, or his right, title or interest therein, without written consent of the Owner.

ARTICLE VI.

Attachment: Exhibit A - Fire Station ITB 22-BG-06 (2023-R-55 : Fire Station Construction)

A. The work shall be subject at all times to the supervision of the Engineer and his authorized assistants. The Engineer shall decide all questions which may arise relative to the Drawings, Specifications, and the performance of the work. Any doubt concerning the meaning of the Specifications and the Drawings, or any ambiguity or obscurity as to wording or intent of them shall be decided by the Engineer, and such decisions shall be binding upon both parties hereto, and shall not be subject to arbitration.

ARTICLE VII.

A. The Contractor shall guarantee his work and shall remedy, without cost to the Owner, any defects which may develop therein during a period of one (1) year from the date of the Owner's approval of the Completion Certificate issued by the Engineer.

ARTICLE VIII.

A. In the event of conflict between any of the Contract Documents, the provisions of this Agreement shall govern.

IN WITNESS WHEREOF, the Parties hereto have signed this Contract in quintuplicate the day and year first above written.

ATTEST: CITY OF HOLLY HILL, FLORIDA

By_____

Valerie Manning Joseph A. Forte

Title City Clerk Title City Manager

_____

WITNESS: CONTRACTOR

_____ By_____

END OF SECTION

Attachment: Exhibit A - Fire Station ITB 22-BG-06 (2023-R-55 : Fire Station Construction)

SECTION 00 65 00
CERTIFICATE OF INSURANCE
FOR
PUBLIC LIABILITY AND PROPERTY DAMAGE

This is to certify _____ Company has issued to _____, of the City of _____, State of _____ ,

the following policy or policies; Public Liability Policy No. _____ effective on,

_____. 20___, limits_____,

Property Damage Policy No. _____effective on _____, 20__, and expiring

on_____, 20___, limits_____.

If at any time this coverage is to be canceled, the undersigned will notify the insured and _____, in writing thirty (30) days prior to cancellation of the policy.

_____

(This certificate must be made by a duly authorized official of the Insurance Company carrying the risk, or a separate certificate of similar context executed on Insurance Company's Standard Form may be attached hereto.)

END OF SECTION

Attachment: Exhibit A - Fire Station ITB 22-BG-06 (2023-R-55 : Fire Station Construction)

SECTION 00 66 00
AFFIDAVIT REGARDING WORKMEN'S COMPENSATION

State of _____

County of _____

_____being duly sworn according to law, deposes and says (it, he, they) ha__ accepted the Workmen's Compensation laws of the State of Florida, with its supplements and amendments and has insured (its, his, their) liability there under in accordance with the terms of said Laws with the _____Company, under the terms of Policy No. _____ for a period from ___, 20___ to _____, 20 __.

WITNESS: _____

CONTRACTOR: _____

By_____

Title_____

Sworn to and subscribed before me this ____ day of _____, 20___.

_____
Notary Public

_____
Notary Public (Print or Type)

My Commission Expires: _____

END OF SECTION

Attachment: Exhibit A - Fire Station ITB 22-BG-06 (2023-R-55 : Fire Station Construction)

SECTION 00 66 50
CERTIFICATE OF INSURANCE FOR
WORKMEN'S COMPENSATION

This is to certify that _____, Company has issued to _____, of the City of_____, State of _____,
the following policy or policies: Workmen's Compensation and Employer's Liability Policy No.
_____effective on _____, 20 _____.
Reference Policy No. _____effective on_____, 20____ and expiring on _____, 20 re limits _____.

If at any time this coverage is to be canceled, the undersigned will notify the insured and the _____in writing thirty (30) days prior to cancellation of policy.

_____

(This certificate must be made by a duly authorized official of the Insurance Company carrying the risk, or a separate certificate of similar context executed on Insurance Company's Standard Form may be attached hereto.)

END OF SECTION

Attachment: Exhibit A - Fire Station ITB 22-BG-06 (2023-R-55 : Fire Station Construction)

SECTION 00 67 00

CONTRACTOR'S STATEMENT UNDER OATH, TO OWNER

To: _____

_____

The undersigned as Contractor has heretofore, on the ___ day of _____, 20 , has been awarded a Contract by you, as Owner, to furnish all the materials and labor in the construction of a project entitled: _____ for the Contract Price of in accordance with plans and specifications therefore as prepared by Hall & Ogle Architects, Inc., located at 208 Magnolia Avenue, Daytona Beach, Florida 32114.

Said project has been completed and the Contract and Plans therefore fully complied with and all of the Contract Price has been paid by you, except the Final Payment thereon, which is now due, but is being withheld until a sworn statement is furnished, as required by _____showing whether there are any unpaid and outstanding bills in connection with said Project.

The undersigned hereby certified, under oath, that all lienors contracting directly with or directly employed by the undersigned, on said Contract, have been paid in full, and further certifies, under oath, that there are no outstanding or unpaid bills for labor performed, or materials furnished in connection with said work or improvements.

Dated at _____ this ___ day of _____, 20___.

By _____

Contractor

State of _____

County of _____

Sworn to and subscribed before me this _____ day of _____, 20 _____.

_____

Notary Public

My Commission Expires: _____

END OF SECTION 00 67 00 - 01

Attachment: Exhibit A - Fire Station ITB 22-BG-06 (2023-R-55 : Fire Station Construction)

SECTION 00 08 00A

CONTRACTORS STANDARD INSURANCE REQUIREMENTS AND INDEMNIFICATION CLAUSE

I. INSURANCE

A. Prior to commencing work, the Contractor shall provide at his own cost and expense insurance to the City of HOLLY HILL as required below. The insurance companies must be licensed in the State of Florida and be rated by A.M. Best as A: Class X or better. The required insurance shall be evidenced by certificates and/or policies as determined by the City. All policies and certificates of insurance shall be approved by the City prior to inception of any work.

B. It is required that each Certificate of Insurance and/or policy must give 30 days prior written notice of cancellation, non-renewal or adverse change to the City of HOLLY HILL Finance Department by registered mail, return receipt requested. All such notices shall name the Contractor and identify the contract number.

C. The "City of HOLLY HILL," wherever used, shall be defined to include the City itself, elected officials, officers, employees, volunteers, representatives, agents and any affiliates.

D. The "Contractor," wherever used, shall be defined to include the Contractor, any subsidiaries or affiliates, officers, employees, volunteers, representatives, agents, contractors and subcontractors.

E. If at any time any of the required policies shall be or shall become unsatisfactory to the City as to form or substance, or if the insurance company becomes unsatisfactory to the City, the Contractor shall, upon written notice to that effect from the City, promptly obtain a new policy, submit the policy to the City for approval, and submit the Certificate of Insurance, as previously required.

If at any time the Contractor shall fail to furnish and/or maintain the required insurance, this contract may be declared suspended, discontinued or terminated, at the discretion of the City. Failure of the Contractor to take out and/or maintain any of the required insurances shall not relieve the Contractor from any liability under the contract, nor shall the insurance requirements be construed to conflict with or otherwise limit the obligations of the Contractor concerning indemnification.

F. The Contractor is required to provide new Certificates of Insurance to the City at least 20 days prior to the coverage renewal dates. If any of the insurance requirements are not complied with at their renewal dates, the City may at their option, (1) withhold payments to the Contractor until those requirements have been met or, (2) pay the renewal premium and withhold such payments from any monies due the Contractor.

G. In the event of any claims having been filed due to any operation under this contract that are in excess of the insured amounts, the excess amount of such claim, or any portion thereof, may be withheld from payments due the Contractor until such time as the Contractor shall furnish such additional security covering such claims as may be determined by the City of HOLLY HILL

Attachment: Exhibit A - Fire Station ITB 22-BG-06 (2023-R-55 : Fire Station Construction)

H. The Contractor shall provide the following insurance on forms no more restrictive than the latest edition of those filed by the Insurance Services Office, and name the "City of HOLLY HILL" (as defined in "C" above) as an Insured to the extent of the City's interests.

II. LIABILITY INSURANCE

A. **WORKERS' COMPENSATION - STATUTORY** - in compliance with the Workers' Compensation law of the State of Florida including employers liability coverage of at least $100,000. If any operations are to be undertaken on or about navigable waters, coverage must be included for the U.S. Longshoremen and Harbor Workers Acts and Jones Act.

B. **COMMERCIAL GENERAL LIABILITY** - with minimum limits of:

$2,000,000	General Aggregate
$1,000,000	Products - Completed Operations Aggregate
$1,000,000	Personal and Advertisement Injury
$1,000,000	Each Occurrence
$ 100,000	Fire Damage

C. **BUSINESS AUTOMOBILE LIABILITY** - with minimum limits of $1,000,000 per occurrence combined single limit. This insurance shall include for bodily injury and property damages the following coverage's:

(1) Owned Automobiles

(2) Hired Automobiles

(3) Non-owned Automobiles

(4) Employee Non-ownership

NOTE! The required limits of liability for the above policies may include umbrella insurance with the umbrella policy making up the difference between the policy limits of the underlying policies and the total amount of coverage required. Such Umbrella Liability insurance shall be a "follow form" and be at least as broad as the underlying policies.

III. PROPERTY INSURANCE

When this contract includes construction of and/or additions to above-ground buildings or structures, Builder's Risk and/or Installation Floater policies must be provided as follows:

A. **BUILDER'S RISK** - "All risk" form in the amount of 100% of the completed value of such addition, building or structure to include personal property of others in the care, custody or control of the Contractor, and shall include a flat-premium endorsement.

Attachment: Exhibit A - Fire Station ITB 22-BG-06 (2023-R-55 : Fire Station Construction)

(1) Maximum Deductible - $5,000 each claim

(2) Certified Copy of the policy must be provided to the City prior to the commencement of work.

(3) Waiver of Occupancy Clause or Warranty - to provide that the Builder's Risk coverage will continue to apply until final acceptance by the City of the building or addition, regardless of any prior occupancy.

(4) Flood Insurance must be provided when buildings or structures are located within an identified special flood hazard area. The Flood Insurance must protect the interest of the City and be in the amount of the total insurable value of such building or structure, or the maximum amount of flood insurance coverage available under the National Flood program, whichever is the lesser.

(5) For additions or repairs of existing buildings or structures, the "Builder's Risk Completed Form" covering the Contractor's interest in improvements, repairs, additions, or alterations to completed buildings, shall be included.

(6) Bridges, Viaducts or similar structures - the "Bridge Builders Risk Form" - "All risk" contract with the flat-premium endorsement should be utilized.

B. **INSTALLATION FLOATER** - when the contract is for the installation of machinery and/or equipment into an existing structure, but does not contemplate construction of or addition to the structure itself.

(1) "All Risk" coverage to include transit and installation.

(2) Amount of Insurance - 100% of installed replacement cost value

(3) Maximum Deductible - $5,000 each claim.

(4) Cessation of Insurance - Coverage is to continue in force until final acceptance by the City.

(5) Certified Copy of the policy must be provided to the City prior to commencement of work.

(6) Flood Insurance - must be provided when machinery or equipment are located within an identified special flood hazard area. The Flood Insurance must protect the interest of the city and be in the amount of the total insurable value of such machinery or equipment.

IV. CERTIFICATE OF INSURANCE CLAUSES

All policies and Certificates of Insurance of the Contractor shall contain the following clauses and agreements:

Attachment: Exhibit A - Fire Station ITB 22-BG-06 (2023-R-55 : Fire Station Construction)

A. Insurers shall have no right of recovery or subrogation against the City of HOLLY HILL (as defined in "C" above), it being the intention of the parties that the insurance policies so effected shall protect both parties and be primary coverage for any and all losses covered by the above described insurance.

B. The clause "other insurance" in a policy in which the City of HOLLY HILL is named as an Insured shall not apply to the City of HOLLY HILL.

C. The insurance companies issuing the policies shall have no recourse against the City of HOLLY HILL (as defined in "C" above) for payment of any premiums or for assessments under any policy for insurance.

D. The contractor's insurer shall be requested to include a breach of warranty clause to prevent nullification of insurance because the Contractor breaches a condition of the policy.

E. Any and all deductibles in the above described insurance policies shall be assumed by and be for the account of, and at the sole risk of the Contractor.

F. Any loss payable under the Property Insurance, if any, is to be adjusted with and made payable to the City of HOLLY HILL, as their interest may appear.

V. CITY INDEMNIFICATION

The following Indemnification Agreement shall be a provision of this contract and also shall be endorsed onto or attached to the insurance policy and Certificate of Insurance:

"The Contractor agrees to protect, defend and pay on behalf of, and hold the City of HOLLY HILL and its elected officials, officers, employees, volunteers, representatives, agents and affiliates free and harmless from and against all claims for personal or bodily injury or death, or property damage or destruction of tangible property including loss of use thereof, losses, penalties, damages, settlements, costs, charges, professional fees or other expenses of every kind and character in connection with and arising directly or indirectly out of this agreement and/or performance thereof, unless such claims are a result of the City of HOLLY HILL's sole negligence. This indemnification clause includes claims made by the employees and subcontractors of the Contractor against the Owner and the Contractor hereby waives its entitlement, if any, to immunity under Section 440.11, Florida Statutes. Nothing contained herein shall be construed as a waiver of any immunity from or a limitation of liability the City may have under the doctrine of sovereign immunity or Chapter 768.28, Fla. Stat. This indemnification provision shall survive the completion of the project and shall be in full force and effect beyond the completion of the project or the termination of this contract.

Attachment: Exhibit A - Fire Station ITB 22-BG-06 (2023-R-55 : Fire Station Construction)

CITY OF HOLLY HILL, FLORIDA
INSURANCE REQUIREMENTS CHECKLIST
CITY OF HOLLY HILL, VOLUSIA COUNTY, FLORIDA

Items marked "X" must be provided

X	**General Liability**		**Minimum Limits Required**	
	X	**Commercial General Liability**	$ 2,000,000	**General Aggregate**
	X	**Occurrence Form**	$ 1,000,000	**Product/Completed Operations Agg.**
	___	_____	$ 1,000,000	**Personal & Advertising Injury**
	___	_____	$ 1,000,000	**Each Occurrence**
	___	_____	$ 100,000	**Fire Damage Pump Stations**

X **Automobile Liability**
Owned, Hired & Non-Owned — $ 1,000,000 **Combined Single Limit per Occurrence**

X **Worker's Compensation and Employer's Liability** — **Statutory**
$ 100,000 **Each Accident**
$ 500,000 **Disease - Policy Limit**
$ 100,000 **Disease - Each Employee**

___ **Professional Liability - Errors & Omissions (*To be completed by Bidder)**
*** Deductible: $**_____ $_____ **Aggregate ***
Claims Made (Y/N):_____ $_____ **Each Claim**
***Occurrence (Y/N):**
***Defense included in Limits (Y/N):**

X **Builder's Risk/Installation Floater (*To be completed by Bidder)**
*** Flood included $**_____ **Limit** $_____ **100% of Completed or Installed Value, All-Risk Form**
*** Transportation included $**_____ **Limit**
*** Storage included $**_____ **Limit**
City must be a named insured. Copy of policy will be required.

___ **Other**

_____ $

_____ $

X **The Certificate of Insurance must show "The City of HOLLY HILL, elected officials and employees" and the adjacent property owners as an additional insured.**

X **Certificates must give to the City of HOLLY HILL 30 days' prior written notice of cancellation, non-renewal, or adverse change.**

X **Certificates must identify bid number and bid title.**

X **A Wavier of Subrogation shall be provided to the City**

Statement of Bidder:
We understand the requirements requested and agree to comply fully.

Bidder - Authorized Signature A complete copy of this form with original signature must accompany bid.

Attachment: Exhibit A - Fire Station ITB 22-BG-06 (2023-R-55 : Fire Station Construction)

SECTION 00 84 00
CONTRACTOR REQUEST FOR INFORMATION (RFI)

PROJECT NAME: **FIRE STATION CONSTRUCTION**

OWNER: _____
ENGINEER: _____ PROJECT NO. _____
CONTRACTOR: _____ PROJECT NO. _____

RFI NO. _____ SPEC. SECT. _____ DRAWING NO. _____
RFI SHORT TITLE: _____

QUESTION/ISSUE: _____

BY: _____ DATE: _____

REPLY: _____

BY: _____ DATE: _____

CC:

- ☐ CONTRACTOR
- ☐ FIELD (INSPECTOR)
- ☐ OWNER
- ☐ ARCHITECT
- ☐ OTHER: _____

END SECTION

Attachment: Exhibit A - Fire Station ITB 22-BG-06 (2023-R-55 : Fire Station Construction)

SECTION 00 84 10
NOTICE OF AWARD FORM

Date:_____

Contractor:_____

Project:

Date of Bid Opening: _____

You are notified that your bid dated _____, 20____ for the above Contract has been considered and the OWNER, expects to award you a contract for:

_____

_____.

(Indicated total Work, Alternates or Sections of Work Awarded)

The Contract Price of your contract is _____ Dollars ($_____).

Five (5) copies of each of the following proposed Contract Documents (except Project Manual and Drawings) accompany this Notice of Award:

- Agreement Between Owner and Contractor
- Payment and Performance Bond
- Public Construction Bond
- Insurance Requirements
- Affidavit Regarding Workman's Compensation
- Certificate of Insurance for Workman's Compensation

You must comply with the following conditions to the awarded contract within ten (10) days of the date of the Notice of Award, which is by _____, 20___.

Attachment: Exhibit A - Fire Station ITB 22-BG-06 (2023-R-55 : Fire Station Construction)

1. You must deliver to the OWNER two (2) fully executed counterparts of the Agreement.

2. You must deliver with the executed Agreement two (2) completed original documents with original signatures on the Payment and Material Payment Bond and Public Construction Bond in the form specified in the Bidding Documents.

3. You must provide in writing the correct name and address of the surety which is providing the Payment and Material Payment Bond and Public Construction Bonds and the correct name and address of the surety's resident agent for service of process in Florida.

4. You must deliver with the executed Agreement two (2) completed, with original signatures, Certificates and Endorsements of Insurance in the form specified in the Bidding Documents.

Failure to comply with these conditions within the time specified will entitle the OWNER to consider your Bid abandoned, to annul this Notice of Award, and to declare your Bid Security forfeited.

Within ten (10) days after you comply with these conditions, the OWNER will return to you one (1) fully signed counterpart of the agreement with the Contract Documents attached.

OWNER'S REPRESENTATIVE:

_____

_____ Date: _____

(Authorized Signature)

_____

(Title)

END OF SECTION

Attachment: Exhibit A - Fire Station ITB 22-BG-06 (2023-R-55 : Fire Station Construction)

SECTION 00 84 20
NOTICE TO PROCEED FORM

Date: _____

Contractor: _____

_____

Notice to Proceed on Project:

You are notified that the Contract Time under the above contract will commence to run on _____ __, 20___. On that date you are to start performing the Work and your other obligations under the Contract Documents. Based on the Contract Time stated in the Agreement, we calculate that the dates of substantial Completion and Final Completion are _____ _____, 20___, and _____, 20___, respectively.

Work at the site must be started by _____, 20__ as indicated in the Contract Documents.

Enclosed is one (1) set of Drawings and one (1) bound copy of the Project Manual containing:

- Instruction to Bidders
- Bid Form
- Bid Bond
- Executed Agreement
- Payment and Performance Bond
- Public Construction Bond
- Certificates of Insurance
- General Conditions
- Supplementary Conditions
- Notice of Award
- Specifications
- Addenda Numbers ____ through ____

OWNER'S REPRESENTATIVE:

_____

_____
(Name/Title)

_____
(Date)

END OF SECTION
00 84 20-1

Attachment: Exhibit A - Fire Station ITB 22-BG-06 (2023-R-55 : Fire Station Construction)

SECTION 00 84 30

CHANGE ORDER FORM

PROJECT:

CHANGE ORDER NO. _____

CONTRACTOR:_____

The following changes are hereby made to the Contract Documents:

CHANGE IN CONTRACT PRICE: Original Contract Price: $_____	CHANGE IN CONTRACT TIMES: Original Contract Times: Substantial Completion: _____ Final Completion:
Net changes from previous Change Orders No. to No. _____. $_____	Changes in contract time from previous Change Orders No. _____ to No. _____. _____ Days
Contract Price prior to this Change Order: $_____	Contract Completion Date prior to this Change Order: Final Completion:
Net Increase (decrease) of this Change Order: $_____	Changes in contract time requested this Change Order No. _____ Days
Contract Price with all approved Change Orders: $_____	Contract Times with all approved Change Orders: Final Completion:

CHANGES ORDERED:

Attachment: Exhibit A - Fire Station ITB 22-BG-06 (2023-R-55 : Fire Station Construction)

I. GENERAL – This change order is necessary to cover changes in the work to be performed under this Contract. The General Conditions, Supplementary Conditions, Specifications and all parts of the Project Manual listed in Article 1, Definitions, of the General Conditions apply to and govern all work under this change order.

The change in price and/or delivery date described, is considered to be fair and reasonable and has been mutually agreed upon in full agreement and final settlement of all claims arising out of the modification including all claims for delays and disruptions resulting from, caused by, or incident to such modifications and change orders.

II. REQUIRED CHANGES:

III. JUSTIFICATION:

IV. PAYMENT:

Acknowledgments:

Attachment: Exhibit A - Fire Station ITB 22-BG-06 (2023-R-55 : Fire Station Construction)

The aforementioned change, and work affected thereby, is subject to all provisions of the original contract not specifically changed by this Change Order;

It is expressly understood and agreed that the approval of the Change Order shall have no effect on the original contract other than matters expressly provided herein;

The prices quoted are fair and reasonable and in proper ratio to the cost of the original work contracted for under competitive bidding; and,

The change in price and/or delivery date described is considered to be fair and reasonable and has been mutually agreed upon in full agreement and final settlement of all claims arising out of this modification including all claims for delays and disruptions resulting from, caused by, or incident to such modifications and change orders.

ACCEPTED BY:

_____
(Contractor)

By:

_____
(Date)

_____
(Authorized Signature)

APPROVED BY:

_____
(Owner)

By:

_____
(Date)

_____
(Authorized Signature)

END OF SECTION

SECTION 00 84 40

Attachment: Exhibit A - Fire Station ITB 22-BG-06 (2023-R-55 : Fire Station Construction)

APPLICATION AND CERTIFICATE FOR PAYMENT FORM

Application No. _____ Progress _____ Final _____

Engineer's Project No.: _____

Project:

Contractor: _____ Contract Date: _____

Contract for : _____

Application Date: _____ For Period Ending _____

Change Order Summary			
Change Orders approved in previous months by OWNER TOTAL		ADDITIONS $ 0.00	DEDUCTIONS $ 0.00
Approved this month			
Number	Date Approved		
	TOTALS	$ 0.00	$ 0.00
Net Change by Change Orders			$ 0.00

1.	ORIGINAL CONTRACT SUM $		0.00
2.	Net Change by Change Order $		0.00
3.	CONTRACT SUM TO DATE (Line 1 and 2) $		0.00
4.	TOTAL COMPLETED AND STORED TO DATE $		
5.	RETAINAGE: (Column I & N, Forms 00845 and 00846)		
	a. % of Completed Work $		
	b. % of Stored Material $		
	Total Retainage (Line 5a and 5b)	$	0.00
6.	TOTAL EARNED LESS RETAINAGE (Line 4 less Line 5 Total)	$	0.00
7.	LESS PREVIOUS CERTIFICATES FOR PAYMENT (Line 6 from prior Certificate)	$	0.00
8.	***AMOUNT DUE THIS APPLICATION $***		***0.00***
9.	BALANCE TO FINISH, PLUS RETAINAGE $ (Line 3 less Line 6)		0.00

Attachment: Exhibit A - Fire Station ITB 22-BG-06 (2023-R-55 : Fire Station Construction)

Contractor's Certification

The undersigned Contractor hereby swears under penalty of perjury that (1) all previous progress payments received from the Owner on account of Work performed under the contract referred to above have been applied by the undersigned to discharge in full all obligations of the undersigned incurred in connection with Work covered by prior Applications for Payment numbered 1 through ____ inclusive; and (2) all materials and equipment incorporated in said Project or otherwise listed in or covered by this Application for Payment are free and clear of all liens, claims, security interest and encumbrances; (3) all Work covered by this Application for Payment is in accordance with the Contract Documents and not defective as that term is defined in the Contract Documents.

Dated

_____ _____
(Contractor)

By: _____
(Name)

_____
(Title)

COUNTY OF
STATE OF

Before me on this _____ day of _____, 20____, personally appeared _____, known to me, who being duly sworn, deposes and says that (s)he is the _____ of the Contractor above mentioned; that s(he) executed the above Application for Payment and statement on behalf of said Contractor; and that all of the statements contained therein are true, correct and complete.

(Notary Seal)

_____
Notary Public

My commission Expires _____

Engineer's Recommendation

Payment of the above AMOUNT DUE THIS APPLICATION is recommended.

Hall & Ogle Architects, Inc.

By: _____
(Authorized Signature)

Attachment: Exhibit A - Fire Station ITB 22-BG-06 (2023-R-55 : Fire Station Construction)

Date: _____

Owner's Approval

By: _____

_____

(Title)

Acct No.

Date: _____

END OF SECTION

Attachment: Exhibit A - Fire Station ITB 22-BG-06 (2023-R-55 : Fire Station Construction)

SECTION 01 35 01

ATTACHMENTS

PART 1 – GENERAL

1.01 DESCRIPTION

A. The following attachments are hereby made part of the project specifications as fully and completely as if the same were fully set forth herein:

1. Project Manual (Exhibit A)
2. Project Drawings (Exhibit B)

Attachment: Exhibit A - Fire Station ITB 22-BG-06 (2023-R-55 : Fire Station Construction)

SECTION 01 42 00

REFERENCES

PART 1 – GENERAL

1.01 GENERAL

A. Applicable Publications. Whenever in these Specifications references are made to published specifications, codes, standards, or other requirements, it shall be understood that wherever no date is specified, only the latest specifications, standards, or requirements of the respective issuing agencies which have been published as of the date that the Work is advertised for bids, shall apply; except to the extent that said standards or requirements may be in conflict with applicable laws, ordinances, or governing codes. No requirements set forth herein or shown on the Drawings shall be waived because of any provision of or omission from said standards or requirements.

B. Assignment of Specialists. In certain instances, specification test requires (or implies) that specific work is to be assigned to specialist or expert entities who must be engaged for the performance of the Work. Such assignments shall be recognized as special requirements over which the CONTRACTOR has no choice or option. These requirements shall not be interpreted so as to conflict with the enforcement of building codes and similar regulations governing the Work. They are not intended to interfere with local union jurisdiction settlements and similar conventions. Such assignments are intended to establish which party or entity involved in a specific unit of Work is recognized as "expert" for the indicated construction processes or operations. Nevertheless, the final responsibility for fulfillment of the entire set of Contract requirements remains with the CONTRACTOR.

1.02 REFERENCE SPECIFICATIONS, CODES, AND STANDARDS

A. Without limiting the generality of other requirements of the Specifications, all Work specified herein shall conform to or exceed the requirements of such referenced documents which are not in conflict with the requirements of these Specifications or applicable codes.

B. References herein to "Building Code" shall mean the latest edition of the Florida Building Code. The latest edition of the code as approved and used by the local agency as of the date of award as adopted by the agency having jurisdiction shall apply to the Work herein, including all addenda, modifications, amendments, or other lawful changes thereto.

Attachment: Exhibit A - Fire Station ITB 22-BG-06 (2023-R-55 : Fire Station Construction)

C. In case of conflict between codes, reference standards, Drawings, and the other Contract Documents, the most stringent requirements shall govern. All conflicts shall be brought to the attention of the ARCHITECT for clarification and directions prior to ordering or providing any materials or labor. The CONTRACTOR shall bid the most stringent requirements.

D. Applicable Standard Specifications. The ARCHITECT shall construct the Work specified herein in accordance with the requirements of the Contract Documents and the referenced portions of those referenced codes, standards, and specifications listed.

PART 2 – PRODUCTS (NOT USED)

PART 3 – EXECUTION (NOT USED)

END OF SECTION

Attachment: Exhibit A - Fire Station ITB 22-BG-06 (2023-R-55 : Fire Station Construction)

SECTION 01 78 36

WARRANTIES

PART 1 – GENERAL

1.01 DESCRIPTION

A. Scope of Work:

1. Compile specified warranties and bonds as specified in these Specifications.

2. Co-execute submittals when so specified.

3. Review submittals to verify compliance with Contract Documents.

4. Submit to ARCHITECT for review and transmittal to OWNER.

1.02 SUBMITTAL REQUIREMENTS

A. Assembly warranties, bonds and service and maintenance contracts, executed by each of the respective manufacturers, suppliers, and subcontractors.

B. Number of original signed copies required: One (1) each

C. Table of Contents: Neatly typed, in orderly sequence. Provide complete information for each item.

1. Product of work item.

2. Firm, with name of principal, address, and telephone number.

3. Scope.

4. Date of beginning of warranty, bond, or service and maintenance contract.
5. Duration of warranty, bond, or service maintenance contract.

Attachment: Exhibit A - Fire Station ITB 22-BG-06 (2023-R-55 : Fire Station Construction)

6. Provide information for OWNER's personnel:

a. Proper procedure in case of failure.
b. Instances which might affect the validity of warranty or bond.

7. CONTRACTOR, name of responsible principal, address, and telephone numbers.

1.03 FORM OF SUBMITTALS

A. Prepare in duplicate packets.

B. Format:

1. Size: Eight and one-half inches by 11 inches (8-1/2" x 11"), punch sheets for standard three-post binder.

a. Fold larger sheets to fit into binders.

2. Cover: Identify each packet with typed or printed title "WARRANTIES AND BONDS". List:

a. Title of Project.
b. Name of CONTRACTOR.

C. Binders: Commercial quality, three (3)-post binder, with durable and cleanable plastic covers and maximum post width of two inches (2").

1.04 WARRANTY SUBMITTALS REQUIREMENTS

A. For all major pieces of equipment, submit a warranty from the equipment manufacturer. Manufacturer's warranty period shall be concurrent with CONTRACTOR's for one (1) year, unless otherwise specified, commencing at the time of final acceptance by OWNER.

B. CONTRACTOR shall be responsible for obtaining certificates for equipment warranty for all major equipment which has at least a one (1) hp motor or which lists for more than $1,000. ENGINEER reserves the right to request warranties for equipment not classified as major. CONTRACTOR shall still warrant equipment not considered to be "major" in the CONTRACTOR's one (1) year warranty period even though certificates of warranty may not be required.

Attachment: Exhibit A - Fire Station ITB 22-BG-06 (2023-R-55 : Fire Station Construction)

C. In the event that the equipment manufacturer or supplier is unwilling to provide a one (1) year warranty commencing at the time of OWNER acceptance, the CONTRACTOR shall obtain from the manufacturer a two (2) year warranty commencing at the time of equipment delivery to the job site. This two (2) year warranty from the manufacturer shall not relieve the CONTRACTOR of the one (1) year warranty starting at the time of OWNER acceptance of the equipment.

D. OWNER shall incur no labor or equipment cost during the guarantee period.

E. Guarantee shall cover all necessary labor, equipment and replacement parts resulting from faulty or inadequate design, improper assembly or erection, defective workmanship and materials, leakage, breakage or other failure of all equipment and components furnished by manufacturer.

PART 2 – PRODUCTS (NOT USED)

PART 3 – EXECUTION (NOT USED)

END OF SECTION

Attachment: Exhibit A - Fire Station ITB 22-BG-06 (2023-R-55 : Fire Station Construction)

HOLLY HILL
FLORIDA

REPLACEMENT FIRE STATION #96
CITY OF HOLLY HILL

PROJECT MANUAL
100% CONSTRUCTION DOCUMENTS

May 18, 2023

OWNER: CITY OF HOLLY HILL
1065 S. Ridgewood Ave.
Holly Hill, Florida 32117
(386) 248-9429

ARCHITECTS: HALL & OGLE ARCHITECTS, INC.
208 Magnolia Avenue
Daytona Beach, Florida 32114
(386) 255-6163

ENGINEERS: NEWKIRK ENGINEERING, INC. - CIVIL
1230 North US Highway 1, Suite 3
Ormond Beach, Florida 32174
(386) 872-7794

AB CONSULTING ENGINEERS – STRUCTURAL
301 Thalia Drive
Orlando, Florida 32828
(407) 275-3050

DELOSE O'NEAL ENGINEERING – MECH./PLUMBING
P.O. Box 530267
Debary, Florida 32753
(407) 766-2813

G & P ENGINEERING LLC – FIRE PROTECTION
P.O. Box 196725
Winter Springs, Florida 32719
(407) 476-3031

JOHN M. PATTERSON, P.E. – ELECTRICAL
1291 John Anderson Drive
Ormond Beach, Florida 32176
(386) 441-2382

A/E: 2204

Attachment: Exhibit B - Fire Station #96 Project Manual (2023-R-55 : Fire Station Construction)

TABLE OF CONTENTS

DIVISION 01 - GENERAL REQUIREMENTS

012000 APPLICATIONS FOR PAYMENT
013100 PROJECT COORDINATION
013200 PROJECT MEETINGS
014000 QUALITY CONTROL SERVICES
015000 TEMPORARY FACILITIES
015100 FIELD ENGINEERING
016000 PRODUCT REQUIREMENTS
016100 SUBMITTALS
017000 PROJECT CLOSEOUT

DIVISION 06 - WOOD, PLASTICS, AND COMPOSITES

061000 ROUGH CARPENTRY
064100 ARCHITECTURAL WOOD MILLWORK

DIVISION 07 - THERMAL AND MOISTURE PROTECTION

072100 BUILDING INSULATION
074100 PREFORMED METAL STANDING SEAM ROOFING
076000 FLASHING AND SHEET METAL
079000 JOINT SEALERS

DIVISION 08 - OPENINGS

081113 HOLLOW METAL DOORS AND FRAMES
081416 FLUSH WOOD DOORS
083323 OVERHEAD COILING DOORS
084120 ALUMINUM-FRAMED ENTRANCES
085113 ALUMINUM WINDOWS
087100 FINISH HARDWARE

DIVISION 09 - FINISHES

092116 GYPSUM BOARD ASSEMBLIES
092400 CEMENT PLASTER
093000 TILE
095100 ACOUSTICAL CEILINGS
096519 LUXURY VINYL TILE FLOORING
096566 RUBBER ATHLETIC FLOORING
096750 FLUID APPLIED FLOORING
096813 TILE CARPETING
099000 PAINTING

DIVISION 10 - SPECIALTIES

101400 SIGNAGE
104400 LIFE SAFETY EQUIPMENT AND ACCESSORIES

DIVISION 31 - EARTHWORK

Attachment: Exhibit B - Fire Station #96 Project Manual (2023-R-55 : Fire Station Construction)

310000 EARTHWORK
313116 TERMITE CONTROL

Attachment: Exhibit B - Fire Station #96 Project Manual (2023-R-55 : Fire Station Construction)

SECTION 012000
APPLICATIONS FOR PAYMENT

PART 1 - GENERAL

1.01 RELATED DOCUMENTS

A. Drawings and general provisions of Contract, including General and Supplementary Conditions and other Division-1 Specification Sections, apply to this Section.

1.02 SUMMARY

A. This Section specifies administrative and procedural requirements governing the Contractor's Applications for Payment.
   1. Coordinate the Schedule of Values and Applications for Payment with the Contractor's Construction Schedule, List of Subcontracts, and Submittal Schedule.

B. The Contractor's Construction Schedule and Submittal Schedule are included in Section "Submittals".

1.03 SCHEDULE OF VALUES

A. Coordinate preparation of the Schedule of Values with preparation of the Contractor's Construction Schedule. Correlate line items with other administrative schedules and the forms required for the work, including the following:
   1. Contractor's construction schedule.
   2. Application for Payment form.
   3. List of subcontractors.
   4. Schedule of alternates.
   5. List of products.
   6. List of principal suppliers and fabricators.
   7. Schedule of submittals.

B. Submit the Schedule of Values to the Architect at the earliest feasible date, but in no case later than 10 days before the date scheduled for submittal of the initial Application for Payment.

C. Format and Content: Use the Project Manual Table of Contents as a guide to establish the format for the Schedule of Values.

D. Identification: Include the following Project identification on the Schedule of Values:
   1. Project name and location.
   2. Name of the Architect.
   3. Project number.
   4. Contractor's name and address.
   5. Date of submittal.

E. Arrange the Schedule of Values in a tabular form with separate columns to indicate the following for each item listed:
   1. Generic name.
      a. Related Specification Section.
   2. Change Orders (numbers) that have affected value.
   3. Dollar value.

F. Provide a breakdown of the Contract Sum in sufficient detail to facilitate continued evaluation of Applications for Payment and progress reports.

G. Round amounts off to the nearest whole dollar; the total shall equal the Contract Sum.

H. For each part of the Work where an Application for Payment may include materials or equipment, purchased or fabricated and stored, but not yet installed, provide separate line items on the Schedule of Values for initial cost of the materials, for each subsequent stage of completion, and for total installed value of that part of the Work.

I. Margins of Cost: Show line items for indirect costs, and margins on actual costs, only to the extent that such items will be listed individually in Applications for Payment. Each item in the

Attachment: Exhibit B - Fire Station #96 Project Manual (2023-R-55 : Fire Station Construction)

Schedule of Values and Applications for Payment shall be complete including its total cost and proportionate share of general overhead and profit margin.

1. At the Contractor's option, temporary facilities and other major cost items that are not direct cost of actual work-in-place may be shown as separate line items in the Schedule of Values or distributed as general overhead expense.

J. Schedule Updating: Update and resubmit the Schedule of Values when Change Orders or Construction Change Directives result in a change in the Contract Sum.

1.04 APPLICATIONS FOR PAYMENT:

A. Each Application for Payment shall be consistent with previous applications and payments as certified by the Architect and paid for by the Owner.
   1. The initial Application for Payment, the Application for Payment at time of Substantial Completion, and the final Application for Payment involve additional requirements.

B. Payment Application Times: Each progress payment date is as indicated in the Agreement. The period of construction Work covered by each Application or Payment is the period indicated in the Agreement.

C. Payment Application Forms: Use AIA Document G 702 and Continuation Sheets G 703 as the form for Application for Payment.

D. Application Preparation: Complete every entry on the form, including notarization and execution by person authorized to sign legal documents on behalf of the Owner. Incomplete applications will be returned without action.
   1. Entries shall match data on the Schedule of Values and Contractor's Construction Schedule. Use updated schedules if revisions have been made.
   2. Include amounts of Change Orders and Construction Change Directives issued prior to the last day of the construction period covered by the application.

E. Transmittal: Submit 8 executed copies of each Application for Payment to the Architect by means ensuring receipt within 24 hours; three copies shall be complete, including waivers of lien and similar attachments, when required.
   1. Transmit each copy with a transmittal form listing attachments, and recording appropriate information related to the application in a manner acceptable to the Architect.

F. Payment Approval: At each Monthly Progress Meeting a 'Preliminary' Partial Payment Request will be submitted to Architect and Engineers for reviewal, at which time it will be reviewed, modified if required, and approved by the A/E based on 'on-site' inspection and proper documentation for materials and items properly stored. Payment will be withheld if 'as-built' drawings are not current and acceptable to A/E. Payment request will then be finalized and submitted to Architect for further action.

G. Initial Application for Payment: Administrative actions and submittals that must precede or coincide with submittal of the first Application for Payment include the following:
   1. List of subcontractors.
   2. Schedule of Values.
   3. Contractor's Construction Schedule (preliminary if not final).
   4. Submittal Schedule (preliminary if not final).
   5. List of Contractor's staff assignments.
   6. List of Contractor's principal consultants.
   7. Copies of building permits
   8. Copies of authorizations and licenses from governing authorities for performance of the Work.
   9. Initial progress report.
   10. Report of pre-construction meeting.

H. Application for Payment at Substantial Completion: Following issuance of the Certificate of Substantial Completion, submit an Application for Payment; this application shall reflect any Certificates of Partial Substantial Completion issued previously for Owner occupancy of designated portions of the Work.

Attachment: Exhibit B - Fire Station #96 Project Manual (2023-R-55 : Fire Station Construction)

I. Administrative actions and submittals that shall proceed or coincide with this application include:
   1. Occupancy permits and similar approvals.
   2. Warranties (guarantees) and maintenance agreements.
   3. Test/adjust/balance records.
   4. Maintenance instructions.
   5. Meter readings.
   6. Start-up performance reports.
   7. Change-over information related to Owner's occupancy, use, operation and maintenance.
   8. Final cleaning.
   9. Advice on shifting insurance coverages.
   10. List of incomplete Work, recognized as exceptions to Architect's Certificate of Substantial Completion.

J. Final Payment Application: Administrative actions and submittals which must precede or coincide with submittal of the final payment Application for Payment include the following:
   1. Completion of Project closeout requirements.
   2. Completion of items specified for completion after Substantial Completion.
   3. Assurance that unsettled claims will be settled.
   4. Transmittal of required Project construction records to Owner.
   5. Certified property survey.
   6. Proof that taxes, fees and similar obligations have been paid.
   7. Removal of temporary facilities and services.
   8. Removal of surplus materials, rubbish and similar elements.
   9. Change of door locks to Owner's access.

PART 2 - PRODUCTS (NOT APPLICABLE)

PART 3 - EXECUTION (NOT APPLICABLE)

END OF SECTION

Attachment: Exhibit B - Fire Station #96 Project Manual (2023-R-55 : Fire Station Construction)

SECTION 013100
PROJECT COORDINATION

PART 1 - GENERAL

1.01 RELATED DOCUMENTS

A. Drawings and general provisions of Contract, including General and Supplementary Conditions and other Division-1 Specification Sections, apply to this Section.

1.02 SUMMARY

A. This Section specifies administrative and supervisory requirements necessary for Project coordination including, but not necessarily limited to:
   1. Coordination.
   2. Administrative and supervisory personnel.
   3. General installation provisions.
   4. Cleaning and protection.

B. Field engineering is included in Section "Field Engineering".

C. Progress meetings, coordination meetings and pre-installation conferences are included in Section "Project Meetings".

D. Requirements for the Contractor's Construction Schedule are included in Section "Submittals".

1.03 COORDINATION

A. Coordination: Coordinate construction activities included under various Sections of these Specifications to assure efficient and orderly installation of each part of the Work. Coordinate construction operations included under different Sections of the Specifications that are dependent upon each other for proper installation, connection, and operation.
   1. Where installation of one part of the Work is dependent on installation of other components, either before or after its own installation, schedule construction activities in the sequence required to obtain the best results.
   2. Where availability of space is limited, coordinate installation of different components to assure maximum accessibility for required maintenance, service and repair.
   3. Make adequate provisions to accommodate items scheduled for later installation.

B. Where necessary, prepare memoranda for distribution to each party involved outlining special procedures required for coordination. Include such items as required notices, reports, and attendance at meetings.
   1. Prepare similar memoranda for the Owner and separate Contractors where coordination of their Work is required.

C. Administrative Procedures: Coordinate scheduling and timing of required administrative procedures with other construction activities to avoid conflicts and ensure orderly progress of the Work. Such administrative activities include, but are not limited to, the following:
   1. Preparation of schedules.
   2. Installation and removal of temporary facilities.
   3. Delivery and processing of submittals.
   4. Progress meetings.
   5. Project Close-out activities.

1.04 SUBMITTALS

A. Coordination Drawings: Prepare and submit coordination drawings where close and careful coordination is required for installation of products and materials fabricated off-site by separate entities, and where limited space availability necessitates maximum utilization of space for efficient installation of different components.
   1. Show the interrelationship of components shown on separate Shop Drawings.
   2. Indicate required installation sequences.
   3. Comply with requirements contained in Section "Submittals".

Attachment: Exhibit B - Fire Station #96 Project Manual (2023-R-55 : Fire Station Construction)

4. Refer to Division-15 Section "Basic Mechanical Requirements" and Division-16 Section "Basic Electrical Requirements" for specific coordination drawing requirements for mechanical and electrical installations.

B. Staff Names: Within 15 days of Notice to Proceed, submit a list of the Contractor's principal staff assignments, including the Superintendent and other personnel in attendance at the site; identify individuals, their duties and responsibilities; list their addresses and telephone numbers.
   1. Post copies of the list in the Project meeting room, the temporary field office, and each temporary telephone.

PART 2 - PRODUCTS (NOT APPLICABLE).

PART 3 - EXECUTION

3.01 GENERAL INSTALLATION PROVISIONS

A. Inspection of Conditions: Require the Installer of each major component to inspect both the substrate and conditions under which Work is to be performed. Do not proceed until unsatisfactory conditions have been corrected in an acceptable manner.

B. Manufacturer's Instructions: Comply with manufacturer's installation instructions and recommendations, to the extent that those instructions and recommendations are more explicit or stringent than requirements contained in Contract Documents.

C. Inspect materials or equipment immediately upon delivery and again prior to installation. Reject damaged and defective items.

D. Provide attachment and connection devices and methods necessary for securing Work. Secure Work true to line and level. Allow for expansion and building movement.

E. Visual Effects: Provide uniform joint widths in exposed Work. Arrange joints in exposed Work to obtain the best visual effect. Refer questionable choices to the Architect for final decision.

F. Recheck measurements and dimensions, before starting each installation.

G. Install each component during weather conditions and Project status that will ensure the best possible results. Isolate each part of the completed construction from incompatible material as necessary to prevent deterioration.

H. Coordinate temporary enclosures with required inspections and tests, to minimize the necessity of uncovering completed construction for that purpose.

I. Mounting Heights: Where mounting heights are not indicated, install individual components at standard mounting heights recognized within the industry for the particular application indicated. Refer questionable mounting height decisions to the Architect for final decision.

3.02 CLEANING AND PROTECTION

A. During handling and installation, clean and protect construction in progress and adjoining materials in place. Apply protective covering where required to ensure protection from damage or deterioration at Substantial Completion.

B. Clean and maintain completed construction as frequently as necessary through the remainder of the construction period. Adjust and lubricate operable components to ensure operability without damaging effects.

C. Limiting Exposures: Supervise construction activities to ensure that no part of the construction, completed or in progress, is subject to harmful, dangerous, damaging, or otherwise deleterious exposure during the construction period. Where applicable, such exposures include, but are not limited to, the following:
   1. Excessive static or dynamic loading.
   2. Excessive internal or external pressures.
   3. Excessively high or low temperatures.
   4. Thermal shock.
   5. Excessively high or low humidity.
   6. Air contamination or pollution.
   7. Water or ice.

Attachment: Exhibit B - Fire Station #96 Project Manual (2023-R-55 : Fire Station Construction)

8. Solvents.
9. Chemicals.
10. Light.
11. Radiation.
12. Puncture.
13. Abrasion.
14. Heavy traffic.
15. Soiling, staining and corrosion.
16. Bacteria.
17. Rodent and insect infestation.
18. Combustion.
19. Electrical current.
20. High speed operation,
21. Improper lubrication,
22. Unusual wear or other misuse.
23. Contact between incompatible materials.
24. Destructive testing.
25. Misalignment.
26. Excessive weathering.
27. Unprotected storage.
28. Improper shipping or handling.
29. Theft.
30. Vandalism.

END OF SECTION

Attachment: Exhibit B - Fire Station #96 Project Manual (2023-R-55 : Fire Station Construction)

SECTION 013200
PROJECT MEETINGS

PART 1 - GENERAL

1.01 RELATED DOCUMENTS

A. Drawings and general provisions of the Contract, including General and Supplementary Conditions and other Division-1 Specification Sections, apply to this Section.

1.02 SUMMARY

A. This Section specifies administrative and procedural requirements for project meetings including but not limited to:
   1. Pre-Construction Conference.
   2. Pre-Installation Conferences.
   3. Progress Meetings.

B. Construction schedules are specified in another Division-1 Section.

1.03 PRE-CONSTRUCTION CONFERENCE

A. Schedule a pre-construction conference and organizational meeting at the Project site or other convenient location no later than 15 days after execution of the Agreement and prior to commencement of construction activities. Conduct the meeting to review responsibilities and personnel assignments.

B. Attendees: The Owner, Architect and their consultants, the Contractor and its superintendent, major subcontractors, manufacturers, suppliers and other concerned parties shall each be represented at the conference by persons familiar with and authorized to conclude matters relating to the Work.

C. Agenda: Discuss items of significance that could affect progress including such topics as:
   1. Tentative construction schedule
   2. Critical Work sequencing
   3. Designation of responsible personnel
   4. Procedures for processing field decisions and Change Orders
   5. Procedures for processing Applications for Payment
   6. Distribution of Contract Documents
   7. Submittal of Shop Drawings, Product Data and Samples
   8. Preparation and maintenance of record drawings ('as-builts')
   9. Use of the premises
   10. Office, Work and storage areas
   11. Equipment deliveries and priorities
   12. Safety Procedures
   13. First Aid
   14. Security
   15. Housekeeping
   16. Working hours

1.04 PRE-INSTALLATION CONFERENCES

A. Conduct a pre-installation conference at the site before each major construction activity that requires coordination with other construction. The Installer and representatives of manufacturers and fabricators involved in or affected by the installation, and its coordination or integration with other materials and installations that have preceded or will follow, shall attend the meeting. Advise the Architect of scheduled meeting dates.

B. Review the progress of other construction activities and preparations for particular activity under consideration at each pre-installation conference, including requirements for:
   1. Contract Documents
   2. Options
   3. Related Change Orders and applicable Field Orders

Attachment: Exhibit B - Fire Station #96 Project Manual (2023-R-55 : Fire Station Construction)

4. Purchases
5. Deliveries
6. Shop Drawings, Product Data and quality control Samples
7. Possible conflicts
8. Compatibility problems
9. Time schedules
10. Weather limitations
11. Manufacturer's recommendations
12. Compatibility of materials
13. Acceptability of substrates
14. Temporary facilities
15. Space and access limitations
16. Governing regulations
17. Safety
18. Inspection and testing requirements
19. Required performance results
20. Recording requirements
21. Protection

C. Record significant discussions and agreements and disagreements of each conference, along with the approved schedule. Distribute the record of the meeting to everyone concerned, promptly, including the Owner and Architect.

D. Do not proceed if the conference cannot be successfully concluded. Initiate whatever actions are necessary to resolve impediments to performance of Work and reconvene the conference at the earliest feasible date.

1.05 PROGRESS MEETINGS

A. Progress meetings are held bi-weekly at regularly scheduled times in the owner's conference room.

B. Attendees: In addition to representatives of the Owner and Architect, each subcontractor, supplier or other entity concerned with current progress or involved in planning, coordination or performance of future activities shall be represented at these meetings by persons familiar with the Project and authorized to conclude matters relating to progress.

C. Agenda: Review and correct or approve minutes of the previous progress meeting. Review other items of significance that could affect progress. Include topics for discussion as appropriate to the current status of the Project.

D. Contractor's Construction Schedule: Review progress since the last meeting. Determine where each activity is in relation to the Contractor's Construction Schedule, whether on time or ahead or behind schedule. Determine how construction behind schedule will be expedited; secure commitments from parties involved to do so. Discuss whether schedule revisions are required to ensure that current and subsequent activities will be completed within the Contract Time.

E. Review the present and future needs of each entity present, including such items as:
1. Record drawings.
2. Interface requirements.
3. Time.
4. Sequences.
5. Deliveries.
6. Off-site fabrication problems.
7. Access.
8. Site utilization.
9. Temporary facilities and services.
10. Hours of Work.
11. Hazards and risks.
12. Housekeeping.

Attachment: Exhibit B - Fire Station #96 Project Manual (2023-R-55 : Fire Station Construction)

13. Quality and Work standards.
14. Change Orders.
15. Documentation of information for payment requests.

F. Reporting: No later than 3 days after each progress meeting date, distribute copies of minutes of the meeting to each party present and to other parties who should have been present. Include a brief summary, in narrative form, of progress since the previous meeting and report.

G. Schedule Updating: Revise the construction schedule after each progress meeting where revisions to the schedule have been made or recognized. Issue the revised schedule concurrently with the report of each meeting.

PART 2 - PRODUCTS (NOT APPLICABLE)

PART 3 - EXECUTION (NOT APPLICABLE)

END OF SECTION

Attachment: Exhibit B - Fire Station #96 Project Manual (2023-R-55 : Fire Station Construction)

SECTION 014000
QUALITY CONTROL SERVICES

PART 1 - GENERAL

1.01 RELATED DOCUMENTS

A. Drawings and general provisions of Contract, including General and Supplementary Conditions and other Division-1 Specification Sections, apply to this Section.

1.02 SUMMARY

A. This Section specifies administrative and procedural requirements for quality control services.

B. Quality control services include inspections and tests and related actions including reports, performed by independent agencies, governing authorities, and the Contractor. They do not include Contract enforcement activities performed by the Architect.

C. Inspection and testing services are required to verify compliance with requirements specified or indicated. These services do not relieve the Contractor of responsibility for compliance with Contract Document requirements.

D. Requirements of this Section relate to customized fabrication and installation procedures, not production of standard products.
   1. Specific quality control requirements for individual construction activities are specified in the Sections that specify those activities. Those requirements, including inspections and tests, cover production of standard products as well as customized fabrication and installation procedures.
   2. Inspections, testing and related actions specified are not intended to limit the Contractor's quality control procedures that facilitate compliance with Contract Document requirements.
   3. Requirements for the Contractor to provide quality control services required by the Architect, Owner, or authorities having jurisdiction are not limited by provisions of this Section.

1.03 RESPONSIBILITIES

A. Testing: The Owner will engage and pay a testing agency for all quality control testing. The Contractor will be responsible for coordination and scheduling of the required inspections. Costs of retesting, where initial test results prove unsatisfactory and do not indicate compliance with Contract Document requirements, will be paid by the Contractor.

B. Retesting: The Contractor is responsible for retesting where results of required inspections, tests or similar services prove unsatisfactory and do not indicate compliance with Contract Document requirements, regardless of whether the original test was the Contractor's responsibility.
   1. Cost of retesting construction revised or replaced by the Contractor is the Contractor's responsibility, where required tests were performed on original construction.

C. Associated Services: The Contractor shall cooperate with all authorized agencies performing inspections, tests and similar services and provide reasonable auxiliary services as requested. Notify the agency sufficiently in advance of operations to permit assignment of personnel. Auxiliary services required include but are not limited to:
   1. Providing access to the Work and furnishing incidental labor and facilities necessary to facilitate inspections and tests.
   2. Taking adequate quantities of representative samples of materials that require testing or assisting the agency in taking samples.
   3. Providing facilities for storage and curing of test samples, and delivery of samples to testing laboratories.
   4. Providing the agency with a preliminary design mix proposed for use for materials mixes that require control by the testing agency.
   5. Security and protection of samples and test equipment at the Project site.

D. Duties of the Testing Agency: The independent testing agency engaged to perform inspections, sampling and testing of materials and construction specified in individual Specification Sections

Attachment: Exhibit B - Fire Station #96 Project Manual (2023-R-55 : Fire Station Construction)

shall cooperate with the Architect and Contractor in performance of its duties, and shall provide qualified personnel to perform required inspections and tests.

1. The agency shall notify the Architect and Contractor promptly of irregularities or deficiencies observed in the Work during performance of its services.
2. The agency is not authorized to release, revoke, alter or enlarge requirements of the Contract Documents, or approve or accept any portion of the Work.
3. The agency shall not perform any duties of the Contractor.

E. Coordination: The Contractor and each agency engaged to perform inspections, tests and similar services shall coordinate the sequence of activities to accommodate required services with a minimum of delay. In addition the Contractor and each agency shall coordinate activities to avoid the necessity of removing and replacing construction to accommodate inspections and tests.

1. The Contractor is responsible for scheduling times for all inspections, tests, taking samples and similar activities.

1.04 SUBMITTALS

A. The independent testing agency shall submit a certified written report of each inspection, test or similar service, to the Architect, in duplicate, unless the Contractor is responsible for the service. If the Contractor is responsible for the service, submit a certified written report of each inspection, test or similar service through the Contractor, in duplicate.

1. Submit additional copies of each written report directly to the governing authority, when the authority so directs.
2. Report Data: Written reports of each inspection, test or similar service shall include, but not be limited to:
   a. Date of issue.
   b. Project title and number.
   c. Name, address and telephone number of testing agency.
   d. Dates and locations of samples and tests or inspections.
   e. Names of individuals making the inspection or test.
   f. Designation of the Work and test method.
   g. Identification of product and Specification Section.
   h. Complete inspection or test data.
   i. Test results and an interpretations of test results.
   j. Ambient conditions at the time of sample-taking and testing.
   k. Comments or professional opinion as to whether inspected or tested Work complies with Contract Document requirements.
   l. Name and signature of laboratory inspector.
   m. Indicate that the test passed or failed.
   n. If appropriate, indicate that test is a retest.
   o. Names of contractor and architect advised of failing tests.
   p. Recommendations on retesting.

1.05 QUALITY ASSURANCE

A. Qualification for Service Agencies: Engage inspection and testing service agencies, including independent testing laboratories, which are prequalified as complying with "Recommended Requirements for Independent Laboratory Qualification" by the American Council of Independent Laboratories, and which specialize in the types of inspections and tests to be performed.

1. Each independent inspection and testing agency engaged on the Project shall be authorized by authorities having jurisdiction to operate in the State in which the Project is located.

Attachment: Exhibit B - Fire Station #96 Project Manual (2023-R-55 : Fire Station Construction)

PART 2 - PRODUCTS (NOT APPLICABLE).

PART 3 - EXECUTION

3.01 REPAIR AND PROTECTION

A. General: Upon completion of inspection, testing, sample-taking and similar services, repair damaged construction and restore substrates and finishes to eliminate deficiencies, including deficiencies in visual qualities of exposed finishes. Comply with Contract Document requirements for "Cutting and Patching."

B. Protect construction exposed by or for quality control service activities, and protect repaired construction.

C. Repair and protection is the Contractor's responsibility, regardless of the assignment of responsibility for inspection, testing or similar services.

END OF SECTION

Attachment: Exhibit B - Fire Station #96 Project Manual (2023-R-55 : Fire Station Construction)

SECTION 015000
TEMPORARY FACILITIES

PART 1 - GENERAL

1.01 RELATED DOCUMENTS

A. Drawings and general provisions of the Contract, including General and Supplementary Conditions and other Division-1 Specification Sections, apply to this Section.

1.02 SUMMARY

A. This Section specifies requirements for temporary services and facilities, including utilities, construction and support facilities, security and protection.

B. Temporary utilities required include but are not limited to:
   1. Water service and distribution.
   2. Temporary electric power and light.
   3. Telephone service.

C. Temporary construction and support facilities required include but are not limited to:
   1. Temporary heat.
   2. Field offices and storage sheds.
   3. Temporary roads and paving.
   4. Sanitary facilities, including drinking water.
   5. Temporary enclosures.
   6. Temporary signs and bulletin boards.
   7. Waste disposal services.
   8. Construction aids and miscellaneous services and facilities.

D. Security and protection facilities required include but are not limited to:
   1. Temporary fire protection.
   2. Barricades, warning signs, lights.
   3. Environmental protection.

1.03 QUALITY ASSURANCE

A. Regulations: Comply with industry standards and applicable laws and regulations if authorities having jurisdiction, including but not limited to:
   1. Building Code requirements.
   2. Health and safety regulations.
   3. Utility company regulations.
   4. Police, Fire Department and Rescue Squad rules.
   5. Environmental protection regulations.

B. Standards: Comply with NFPA Code 241, "Building Construction and Demolition Operations", ANSI-A10 Series standards for "Safety Requirements for Construction and Demolition", and NECA Electrical Design Library "Temporary Electrical Facilities."
   1. Refer to "Guidelines for Bid Conditions for Temporary Job Utilities and Services", prepared jointly by AGC and ASC, for industry recommendations.
   2. Electrical Service: Comply with NEMA, NECA and UL standards and regulations for temporary electric service. Install service in compliance with National Electric Code (NFPA 70).

C. Inspections: Arrange for authorities having jurisdiction to inspect and test each temporary utility before use. Obtain required certifications and permits.

1.04 PROJECT CONDITIONS

A. Temporary Utilities: Prepare a schedule indicating dates for implementation and termination of each temporary utility. At the earliest feasible time, when acceptable to the Owner, change over from use of temporary service to use of the permanent service.

B. Conditions of Use: Keep temporary services and facilities clean and neat in appearance. Operate in a safe and efficient manner. Take necessary fire prevention measures. Do not

Attachment: Exhibit B - Fire Station #96 Project Manual (2023-R-55 : Fire Station Construction)

overload facilities, or permit them to interfere with progress. Do not allow hazardous dangerous or unsanitary conditions, or public nuisances to develop or persist on the site.

PART 2 - PRODUCTS

2.01 EQUIPMENT

A. General: Provide new equipment; if acceptable to the Architect, undamaged, previously used equipment in serviceable condition may be used. Provide equipment suitable for use intended.

B. Water Hoses: Provide 3/4" heavy-duty, abrasion-resistant, flexible rubber hoses 100 ft. long, with pressure rating greater than the maximum pressure of the water distribution system; provide adjustable shut-off nozzles at hose discharge.

C. Electrical Outlets: Provide properly configured NEMA polarized outlets to prevent insertion of 110-120 volt plugs into higher voltage outlets. Provide receptacle outlets equipped with groundfault circuit interrupters, reset button and pilot light, for connection of power tools and equipment.

D. Electrical Power Cords: Provide grounded extension cords; use "hard-service" cords where exposed to abrasion and traffic. Provide waterproof connectors to connect separate lengths of electric cords, if single lengths will not reach areas where construction activities are in progress.

E. Lamps and Light Fixtures: Provide general service incandescent lamps of wattage required for adequate illumination. Provide guard cages or tempered glass enclosures, where exposed to breakage. Provide exterior fixtures where exposed to moisture.

F. Heating Units: Provide temporary heating units that have been tested and labeled by UL, FM or another recognized trade association related to the type of fuel being consumed.

G. Temporary Offices: Provide prefabricated or mobile units or similar job-built construction with lockable entrances, operable windows and serviceable finishes. Provide heated and air-conditioned units on foundations adequate for normal loading.

H. Temporary Toilet Units: Provide self-contained single-occupant toilet units of the chemical, aerated recirculation, or combustion type, properly vented and fully enclosed with a glass fiber reinforced polyester shell or similar nonabsorbent material.

I. First Aid Supplies: Comply with governing regulations.

J. Fire Extinguishers: Provide hand-carried, portable UL-rated, class "A" fire extinguishers for temporary offices and similar spaces. In other locations provide hand-carried, portable, UL-rated, class "ABC" dry chemical extinguishers, or a combination of extinguishers of NFPA recommended classes for the exposures.

1. Comply with NFPA 10 and 241 for classification, extinguishing agent and size required by location and class of fire exposure.

PART 3 - EXECUTION

3.01 INSTALLATION

A. Use qualified personnel for installation of temporary facilities. Locate facilities where they will serve the Project adequately and result in minimum interference with performance of the Work. Relocate and modify facilities as required.

B. Provide each facility ready for use when needed to avoid delay. Maintain and modify as required. Do not remove until facilities are no longer needed, or are replaced by authorized use of completed permanent facilities.

3.02 TEMPORARY UTILITY INSTALLATION

A. General: Engage the appropriate local utility company to install temporary service or connect to existing service. Where the company provides only part of the service, provide the remainder with matching, compatible materials and equipment; comply with the company's recommendations.

1. Arrange with the company and existing users for a time when service can be interrupted, where necessary, to make connections for temporary services.

Attachment: Exhibit B - Fire Station #96 Project Manual (2023-R-55 : Fire Station Construction)

2. Provide adequate capacity at each stage of construction. Prior to temporary utility availability, provide trucked-in services.
3. Obtain easements to bring temporary utilities to the site, where the Owner's easements cannot be used for that purpose.
4. Use Charges: Cost or use charges for temporary facilities are not chargeable to the Owner or Architect, and will not be accepted as a basis of claims for a Change Order.

B. Water Service: Install water service and distribution piping of sizes and pressures adequate for construction until permanent water service is in use.
1. Sterilization: Sterilize temporary water piping prior to use.

C. Temporary Electric Power Service: Provide weatherproof, grounded electric power service and distribution system of sufficient size, capacity, and power characteristics during construction period. Include meters, transformers, overload protected disconnects, automatic ground-fault interrupters and main distribution switch gear.
1. Power Distribution System: Install wiring overhead, and rise vertically where least exposed to damage. Where permitted, wiring circuits not exceeding 125 Volts, AC 20 ampere rating, and lighting circuits may be nonmetallic sheathed cable where overhead and exposed for surveillance.

D. Temporary Lighting: Whenever overhead floor or roof deck has been installed, provide temporary lighting with local switching.
1. Install and operate temporary lighting that will fulfill security and protection requirements, without operating the entire system, and will provide adequate illumination for construction operations and traffic conditions.

E. Temporary Telephones: Provide temporary telephone service for all personnel engaged in construction activities, throughout the construction period. Install telephone on a separate line for each temporary office and first aid station.
1. At each telephone, post a list of important telephone numbers.

F. Sewers and Drainage: If sewers are available, provide temporary connections to remove effluent that can be discharged lawfully. If sewers are not available or cannot be used, provide drainage ditches, dry wells, stabilization ponds and similar facilities. If neither sewers nor drainage facilities can be lawfully used for discharge of effluent, provide containers to remove and dispose of effluent off the site in a lawful manner.
1. Maintain temporary sewers and drainage facilities in a clean, sanitary condition. Following heavy use, restore normal conditions promptly.

G. Provide earthen embankments and similar barriers in and around excavations and subgrade construction, sufficient to prevent flooding by runoff of storm water from heavy rains.

3.03 TEMPORARY CONSTRUCTION AND SUPPORT FACILITIES INSTALLATION

A. Locate field offices, storage sheds, sanitary facilities and other temporary construction and support facilities for easy access.
1. Maintain temporary construction and support facilities until near Substantial Completion. Remove prior to Substantial Completion. Personnel remaining after Substantial Completion will be permitted to use permanent facilities, under conditions acceptable to the Owner.

B. Temporary Heat: Provide temporary heat required by construction activities, for curing or drying of completed installations or protection of installed construction from adverse effects of low temperatures or high humidity. Select safe equipment that will not have a harmful effect on completed installations or elements being installed. Coordinate ventilation requirements to produce the ambient condition required and minimize consumption of energy.
1. Use of gasoline-burning space heaters, open flame, or salamander type heating units is prohibited.

C. Field Offices: Provide insulated, weathertight temporary offices of sufficient size to accommodate contractor's office personnel at the Project site, and similar separate office for

Attachment: Exhibit B - Fire Station #96 Project Manual (2023-R-55 : Fire Station Construction)

architect and owner's representative. Keep the office clean and orderly for use for small progress meetings. Furnish and equip offices as follows:

1. Contractor's offices: Furnish suitably with not less than a desk and chairs, a 4-drawer file cabinet, plan table and plan rack and a 6-shelf bookcase.

D. Storage and Fabrication Sheds: Install storage and fabrication sheds, sized, furnished and equipped to accommodate materials and equipment involved, including temporary utility service. Sheds may be open shelters or fully enclosed spaces within the building or elsewhere on the site.

E. Temporary Paving: Construct and maintain temporary roads and paving to adequately support the indicated loading and to withstand exposure to traffic during the construction period. Locate temporary paving for roads, storage areas and parking where the same permanent facilities will be located.

F. Sanitary facilities include temporary toilets, wash facilities and drinking water fixtures. Comply with regulations and health codes for the type, number, location, operation and maintenance of fixtures and facilities. Install where facilities will best serve the Project's needs.

1. Provide toilet tissue, paper towels, paper cups and similar disposable materials for each facility. Provide covered waste containers for used material.

G. Toilets: Install self-contained toilet units. Shield toilets to ensure privacy. Use of pit-type privies will not be permitted.

H. Drinking Water Facilities: Provide containerized tap-dispenser bottled-water type drinking water units, including paper supply.

I. Temporary Enclosures: Provide temporary enclosure for protection of construction in progress and completed, from exposure, foul weather, other construction operations and similar activities.

1. Where heat is needed and the permanent building enclosure is not complete, provide temporary enclosures where there is no other provision for containment of heat. Coordinate enclosure with ventilating and material drying or curing requirements to avoid dangerous conditions and effects.
2. Install tarpaulins securely, with incombustible wood framing and other materials. Close openings of 25 square feet or less with plywood or similar materials.
3. Close openings through floor or roof decks and horizontal surfaces with load-bearing wood-framed construction.

J. Project Identification Sign: Furnished by Owner--NIC.

K. Temporary Signs: Prepare signs to provide directional information to construction personnel and visitors.

L. Collection and Disposal of Waste: Collect waste from construction areas and elsewhere daily. Comply with requirements of NFPA 241 for removal of combustible waste material and debris. Enforce requirements strictly. Do not hold materials more than 7 days during normal weather or 3 days when the temperature is expected to rise above 80 deg F (27 deg C). Handle hazardous, dangerous, or unsanitary waste materials separately from other waste by containerizing properly. Dispose of material in a lawful manner.

3.04 SECURITY AND PROTECTION FACILITIES INSTALLATION

A. Temporary Fire Protection: Until fire protection needs are supplied by permanent facilities, install and maintain temporary fire protection facilities of the types needed to protect against reasonably predictable and controllable fire losses. Comply with NFPA 10 "Standard for Portable Fire Extinguishers," and NFPA 241 "Standard for Safeguarding Construction, Alterations and Demolition Operations."

1. Locate fire extinguishers where convenient and effective for their intended purpose, but not less than one extinguisher on each floor at or near each usable stairwell.
2. Store combustible materials in containers in fire-safe locations.

Attachment: Exhibit B - Fire Station #96 Project Manual (2023-R-55 : Fire Station Construction)

3. Maintain unobstructed access to fire extinguishers, fire hydrants, temporary fire protection facilities, stairways and other access routes for fighting fires. Prohibit smoking in hazardous fire exposure areas.
4. Provide supervision of welding operations, combustion type temporary heating units, and similar sources of fire ignition.

B. Barricades, Warning Signs and Lights: Comply with standards and code requirements for erection of structurally adequate barricades. Paint with appropriate colors, graphics and warning signs to inform personnel and the public of the hazard being protected against. Where appropriate and needed provide lighting, including flashing red or amber lights.

C. Security Enclosure and Lockup: Install substantial temporary enclosure of partially completed areas of construction. Provide locking entrances to prevent unauthorized entrance, vandalism, theft and similar violations of security.
1. Storage: Where materials and equipment must be stored, and are of value or attractive for theft, provide a secure lockup. Enforce discipline in connection with the installation and release of material to minimize the opportunity for theft and vandalism.

D. Security Fencing: As soon as possible after commencement of the Work, install chain link fencing (specified in Section 02830) around the entire perimeter of the site to serve as security fencing during the construction period. Provide temporary gates at entrances to the site to be replaced by permanent gates as specified at completion of the work.

E. Environmental Protection: Provide protection, operate temporary facilities and conduct construction in ways and by methods that comply with environmental regulations, and minimize the possibility that air, waterways and subsoil might be contaminated or polluted, or that other undesirable effects might result.

F. Restrict use of noise making tools and equipment to hours that will minimize complaints from persons or firms near the site.

3.05 OPERATION, TERMINATION AND REMOVAL

A. Supervision: Enforce strict discipline in use of temporary facilities. Limit availability of temporary facilities to essential and intended uses to minimize waste and abuse.

B. Maintenance: Maintain facilities in good operating condition until removal. Protect from damage by freezing temperatures and similar elements.
1. Maintain operation of temporary enclosures, heating, cooling, humidity control, ventilation and similar facilities on a 24-hour day basis where required to achieve indicated results and to avoid possibility of damage.

C. Protection: Prevent water filled piping from freezing. Maintain markers for underground lines. Protect from damage during excavation operations.

D. Termination and Removal: Unless the Architect requests that it be maintained longer, remove each temporary facility when the need has ended, or when replaced by authorized use of a permanent facility, or no later than Substantial Completion. Complete or, if necessary, restore permanent construction that may have been delayed because of interference with the temporary facility. Repair damaged Work, clean exposed surfaces and replace construction that cannot be satisfactorily repaired.

E. Remove temporary paving that is not intended for or acceptable for integration into permanent paving. Where the area is intended for landscape development, remove soil and aggregate fill that does not comply with requirements for fill or subsoil in the area. Remove materials contaminated with road oil, asphalt and other petrochemical compounds, and other substances which might impair growth of plant materials or lawns.

F. Repair or replace street paving, curbs and sidewalks at the temporary entrances, as required by the governing authority.

G. At Substantial Completion, clean and renovate permanent facilities that have been used during the construction period, including but not limited to:
1. Replace air filters and clean inside of ductwork and housings.

Attachment: Exhibit B - Fire Station #96 Project Manual (2023-R-55 : Fire Station Construction)

2. Replace significantly worn parts and parts that have been subject to unusual operating conditions.
3. Replace lamps that are burned out or noticeably dimmed by substantial hours of use.

END OF SECTION

Attachment: Exhibit B - Fire Station #96 Project Manual (2023-R-55 : Fire Station Construction)

SECTION 015100
FIELD ENGINEERING

PART 1 - GENERAL

1.01 RELATED DOCUMENTS

A. Drawings and general provisions of the Contract, including General and Supplementary Conditions and other Division-1 Specification Sections, apply to this Section.

1.02 SUMMARY

A. General: This Section specifies administrative and procedural requirements for field engineering services, including, but not necessarily limited to, the following:
   1. Land survey work.
   2. Underground systems certification.

1.03 SUBMITTALS

A. Certificates: Submit a certificate signed by the Land Surveyor or Professional Engineer certifying that the location and elevation of improvements comply with the Contract Documents.

B. Final Property Survey: Submit three (4) copies and one (1) CAD disk of both the final property survey and the certification of underground systems, signed and sealed by Land Surveyor.

C. Project Record Documents: Submit a record of Work performed and record survey data as required under provisions of Sections "Submittals" and "Project Closeout".

1.04 QUALITY ASSURANCE

A. Surveyor: Engage a Land Surveyor or Professional Engineer experienced and specializing in land survey work, who is registered in the State of Florida, to perform land surveying services specified in this section.

PART 2 - PRODUCTS (NOT APPLICABLE)

PART 3 - EXECUTION

3.01 EXAMINATION

A. Verify layout information shown on the Drawings, in relation to the property survey and existing benchmarks before proceeding to layout the Work. Locate and protect existing benchmarks and control points. Preserve permanent reference points during construction.
   1. Do not change or relocate benchmarks or control points without prior written approval. Promptly report lost or destroyed reference points, or requirements to relocate reference points because of necessary changes in grades or locations.
   2. Promptly replace lost or destroyed project control points. Base replacements on the original survey control points.

B. Establish and maintain a minimum of two permanent benchmarks on the site, referenced to data established by survey control points.
   1. Record benchmark locations, with horizontal and vertical data, on Project Record Documents.

C. Existing utilities and equipment: The existence and location of underground and other utilities and construction indicated as existing are not guaranteed. Before beginning sitework, investigate and verify the existence and location of underground utilities and other construction.
   1. Prior to construction, verify the location and invert elevation at points of connection of sanitary sewer, storm sewer and water service piping.

3.02 PERFORMANCE

A. Working from lines and levels established by the property survey, establish benchmarks and markers to set lines and levels at each story of construction and elsewhere as needed to properly locate each element of the Project. Calculate and measure required dimensions within indicated or recognized tolerances. Do not scale Drawings to determine dimensions.
   1. Advise entities engaged in construction activities, of marked lines and levels provided for their use.

Attachment: Exhibit B - Fire Station #96 Project Manual (2023-R-55 : Fire Station Construction)

2. As construction proceeds, check every major element for line, level and plumb.

B. Surveyor's Log: Maintain a surveyor's log of control and other survey Work. Make this log available for reference.
   1. Record deviations from required lines and levels, and advise the Architect when deviations that exceed indicated or recognized tolerances are detected. On Project Record Drawings, record deviations that are accepted and not corrected.
   2. On completion of foundation walls, major site improvements, and other Work requiring field engineering services, prepare a certified survey showing dimensions, locations, angles and elevations of construction and sitework.

C. Site Improvements: Locate and lay out site improvements, including pavements, stakes for grading, fill and topsoil placement, utility slopes and invert elevations by instrumentation and similar appropriate means.

D. Building Lines and Levels: Locate and lay out batter boards for structures, building foundations, column grids and locations, floor levels and control lines and levels required for mechanical and electrical Work.

E. Final Property Survey: Before Substantial Completion, prepare a final property survey showing significant features (real property) for the Project. Include on the survey a certification, signed by the Surveyor, to the effect that principal metes, bounds, lines and levels of the Project are accurately positioned as shown on the survey.

F. Certification of Underground Systems: In addition to the Final Property Survey, the surveyor must certify to the as-built locations and elevations of all underground systems as specified in individual sections of Divisions 2 through 16.

END OF SECTION

Attachment: Exhibit B - Fire Station #96 Project Manual (2023-R-55 : Fire Station Construction)

SECTION 016000
PRODUCT REQUIREMENTS

PART 1 GENERAL

1.01 SECTION INCLUDES

A. Transportation, handling, storage and protection.

B. Product option requirements.

C. Substitution limitations and procedures.

1.02 RELATED SECTIONS

A. Document 00 2113 - Instructions to Bidders: Product options and substitution procedures prior to bid date.

B. Section 01 4000 - Quality Requirements: Product quality monitoring.

1.03 REFERENCES

A. NFPA 70 - National Electrical Code; National Fire Protection Association; 2005.

1.04 SUBMITTALS

A. Product Data Submittals: Submit manufacturer's standard published data. Mark each copy to identify applicable products, models, options, and other data. Supplement manufacturers' standard data to provide information specific to this Project.

B. Shop Drawing Submittals: Prepared specifically for this Project; indicate utility and electrical characteristics, utility connection requirements, and location of utility outlets for service for functional equipment and appliances.

C. Sample Submittals: Illustrate functional and aesthetic characteristics of the product, with integral parts and attachment devices. Coordinate sample submittals for interfacing work.
   1. For selection from standard finishes, submit samples of the full range of the manufacturer's standard colors, textures, and patterns.

PART 2 PRODUCTS

2.01 NEW PRODUCTS

A. Provide new products unless specifically required or permitted by the Contract Documents.

B. Do not use products having any of the following characteristics:
   1. Made, using or containing CFC's or using HCFC's in the manufacturing process.
   2. Made of wood from newly cut old growth timber.

C. Where all other criteria are met, General Contractor shall give preference to products that:
   1. Are extracted, harvested, and/or manufactured closer to the location of the project.
   2. Have longer documented life span under normal use.
   3. Result in less construction waste.
   4. Are made of vegetable materials that are rapidly renewable.

D. Provide interchangeable components of the same manufacture for components being replaced.

E. Wiring Terminations: Provide terminal lugs to match branch circuit conductor quantities, sizes, and materials indicated. Size terminal lugs to NFPA 70, include lugs for terminal box.

F. Cord and Plug: Provide minimum 6 foot cord and plug including grounding connector for connection to electric wiring system. Cord of longer length is specified in individual specification sections.

2.02 PRODUCT OPTIONS

A. Products Specified by Reference Standards or by Description Only: Use any product meeting those standards or description.

B. Products Specified by Naming One or More Manufacturers: Use a product of one of the manufacturers named and meeting specifications, no options or substitutions allowed.

Attachment: Exhibit B - Fire Station #96 Project Manual (2023-R-55 : Fire Station Construction)

C. Products Specified by Naming One or More Manufacturers with a Provision for Substitutions: Submit a request for substitution for any manufacturer not named.

PART 3 EXECUTION

3.01 SUBSTITUTION PROCEDURES

A. Instructions to Bidders specify time restrictions for submitting requests for substitutions during the bidding period. Comply with requirements specified in this section.

B. Hall & Ogle Architects, Inc. will consider requests for substitutions only within 30 days after date of Agreement.

C. Substitutions may be considered when a product becomes unavailable through no fault of the contractor.

D. Document each request with complete data substantiating compliance of proposed substitution with Contract Documents.

E. A request for substitution constitutes a representation that the submitter:
   1. Has investigated proposed product and determined that it meets or exceeds the quality level of the specified product.
   2. Will provide the same warranty, at minimum, for the substitution as for the specified product.
   3. Will coordinate installation and make changes to other Work which may be required for the Work to be complete with no additional cost to City of Holly Hill.
   4. Waives claims for additional costs or time extension which may subsequently become apparent.
   5. Will reimburse City of Holly Hill and Hall & Ogle Architects, Inc. for review or redesign services associated with re-approval by authorities.
   6. Will allow cost savings associated with substitution to reduce Contract Sum.

F. Substitutions will not be considered when they are indicated or implied on shop drawing or product data submittals, without separate written request, or when acceptance will require revision to the Contract Documents.

G. Substitution Submittal Procedure:
   1. Submit four copies of request for substitution for consideration. Limit each request to one proposed substitution.
   2. Submit shop drawings, product data, and certified test results attesting to the proposed product equivalence. Burden of proof is on proposer.
   3. Hall & Ogle Architects, Inc. will notify General Contractor in writing of decision to accept or reject request.

3.02 TRANSPORTATION AND HANDLING

A. Coordinate schedule of product delivery to designated prepared areas in order to minimize site storage time and potential damage to stored materials.

B. Transport and handle products in accordance with manufacturer's instructions.

C. Transport materials in covered trucks to prevent contamination of product and littering of surrounding areas.

D. Promptly inspect shipments to ensure that products comply with requirements, quantities are correct, and products are undamaged.

E. Provide equipment and personnel to handle products by methods to prevent soiling, disfigurement, or damage.

F. Arrange for the return of packing materials, such as wood pallets, where economically feasible.

3.03 STORAGE AND PROTECTION

A. Designate receiving/storage areas for incoming products so that they are delivered according to installation schedule and placed convenient to work area in order to minimize waste due to excessive materials handling and misapplication.

Attachment: Exhibit B - Fire Station #96 Project Manual (2023-R-55 : Fire Station Construction)

B. Store and protect products in accordance with manufacturers' instructions.

C. Store sensitive products in weather tight, climate controlled, enclosures in an environment favorable to product.

D. For exterior storage of fabricated products, place on sloped supports above ground.

E. Provide bonded off-site storage and protection when site does not permit on-site storage or protection.

F. Cover products subject to deterioration with impervious sheet covering. Provide ventilation to prevent condensation and degradation of products.

G. Store loose granular materials on solid flat surfaces in a well-drained area. Prevent mixing with foreign matter.

H. Provide equipment and personnel to store products by methods to prevent soiling, disfigurement, or damage.

I. Arrange storage of products to permit access for inspection. Periodically inspect to verify products are undamaged and are maintained in acceptable condition.

END OF SECTION

Attachment: Exhibit B - Fire Station #96 Project Manual (2023-R-55 : Fire Station Construction)

SECTION 016100
SUBMITTALS

PART 1 - GENERAL

1.01 RELATED DOCUMENTS

A. Drawings and general provisions of Contract, including General and Supplementary Conditions and other Division-1 Specification Sections, apply to this Section.

1.02 SUMMARY

A. This Section specifies administrative and procedural requirements for submittals required for performance of the Work including;
   1. Contractor's construction schedule
   2. Submittal schedule
   3. Product Data
   4. Daily construction reports
   5. Shop Drawings
   6. Samples

B. Administrative Submittals: Refer to other Division-1 Sections and other Contract Documents for requirements for administrative submittals. Such submittals include, but are not limited to:
   1. Permits
   2. Performance and payment bonds
   3. List of Subcontractors
   4. The Schedule of Values submittal is included in Section "Applications for Payment"
   5. Inspection and test reports are included in Section "Quality Control Services"
   6. Applications for Payment
   7. Insurance certificates

1.03 SUBMITTAL PROCEDURES

A. Coordination: Coordinate preparation and processing of submittals with performance of construction activities. Transmit each submittal sufficiently in advance of performance of related construction activities to avoid delay.
   1. Coordinate each submittal with fabrication, purchasing, testing, delivery, other submittals and related activities that require sequential activity.
   2. Coordinate transmittal of different types of submittals for related elements of the Work so processing will not be delayed by the need to review submittals concurrently for coordination.
      a. The Architect reserves the right to withhold action on a submittal requiring coordination with other submittals until related submittals are received.
   3. Processing: Allow sufficient review time so that installation will not be delayed as a result of the time required to process submittals, including time for resubmittals.
      a. Allow two weeks for initial review. Allow additional time if processing must be delayed to permit coordination with subsequent submittals. The Architect will promptly advise the Contractor when a submittal being processed must be delayed for coordination.
      b. If an intermediate submittal is necessary, process the same as the initial submittal.
      c. Allow two weeks for reprocessing each submittal.
      d. No extension of Contract Time will be authorized because of failure to transmit submittals to the Architect sufficiently in advance of the Work to permit processing.

B. Submittal Preparation: Place a permanent label or title block on each submittal for identification. Indicate the name of the entity that prepared each submittal on the label or title block.
   1. Provide a space approximately 4" x 5" on the label or beside the title block on Shop Drawings to record the Contractor's review and approval markings and the action taken.
   2. Include the following information on the label for processing and recording action taken.
      a. Project name.
      b. Date.

Attachment: Exhibit B - Fire Station #96 Project Manual (2023-R-55 : Fire Station Construction)

c. Name and address of Architect.
d. Name and address of Contractor.
e. Name and address of subcontractor.
f. Name and address of supplier.
g. Name of manufacturer.
h. Number and title of appropriate Specification Section.
i. Drawing number and detail references, as appropriate.

C. Submittal Transmittal: Package each submittal appropriately for transmittal and handling. Transmit each submittal from Contractor to Architect using a transmittal form. Submittals received from sources other than the Contractor will be returned without action.
1. On the transmittal, record relevant information and requests for data. On the form, or separate sheet, record deviations from Contract Document requirements, including minor variations and limitations. Include Contractor's certification that information complies with Contract Document requirements. Submittals without Contractor Certification of compliance will be returned without review.
2. Transmittal Form: Use AIA Document G 810.

1.04 CONTRACTOR'S CONSTRUCTION SCHEDULE

A. Bar-Chart Schedule: Prepare a fully developed, horizontal bar-chart type Contractor's construction schedule. Submit within 7 days of the date established for "Commencement of the Work".
1. Provide a separate time bar for each significant construction activity. Provide a continuous vertical line to identify the first working day of each week. Use the same breakdown of units of the Work as indicated in the "Schedule of Values".
2. Within each time bar indicate estimated completion percentage in 10 percent increments. As Work progresses, place a contrasting mark in each bar to indicate Actual Completion.
3. Prepare the schedule on a sheet, or series of sheets, of stable transparency, or other reproducible media, of sufficient width to show data for the entire construction period.
4. Secure time commitments for performing critical elements of the Work from parties involved. Coordinate each element on the schedule with other construction activities; include minor elements involved in the sequence of the Work. Show each activity in proper sequence. Indicate graphically sequences necessary for completion of related portions of the Work.
5. Coordinate the Contractor's construction schedule with the schedule of values, list of subcontracts, submittal schedule, progress reports, payment requests and other schedules.
6. Indicate completion in advance of the date established for Substantial Completion. Indicate Substantial Completion on the schedule to allow time for the Architect's procedures necessary for certification of Substantial Completion.

B. Distribution: Following response to the initial submittal, print and distribute copies to the Architect, Owner, subcontractors, and other parties required to comply with scheduled dates. Post copies in the Project meeting room and temporary field office.
1. When revisions are made, distribute to the same parties and post in the same locations. Delete parties from distribution when they have completed their assigned portion of the Work and are no longer involved in construction activities.

C. Schedule Updating: Revise the schedule after each meeting or activity, where revisions have been recognized or made. Issue the updated schedule concurrently with report of each meeting.

1.05 SUBMITTAL SCHEDULE

A. After development and acceptance of the Contractor's construction schedule, prepare a complete schedule of submittals. Submit the schedule within 10 days of the date required for establishment of the Contractor's construction schedule.
1. Coordinate submittal schedule with the list of subcontracts, schedule of values and the list of products as well as the Contractor's construction schedule.

Attachment: Exhibit B - Fire Station #96 Project Manual (2023-R-55 : Fire Station Construction)

2. Prepare the schedule in chronological order; include submittals required during the first 90 days of construction. Provide the following information:
   a. Scheduled date for the first submittal.
   b. Related Section number.
   c. Submittal category.
   d. Name of subcontractor.
   e. Description of the part of the Work covered.
   f. Scheduled date for resubmittal.
   g. Scheduled date the Architect's final release or approval.

B. Distribution: Following response to initial submittal, print and distribute copies to the Architect, Owner, subcontractors, and other parties required to comply with submittal dates indicated. Post copies in the Project meeting room and field office.
   1. When revisions are made, distribute to the same parties and post in the same locations. Delete parties from distribution when they have completed their assigned portion of the Work and are no longer involved in construction activities.

C. Schedule Updating: Revise the schedule after each meeting or activity, where revisions have been recognized or made. Issue the updated schedule concurrently with report of each meeting.

1.06 DAILY CONSTRUCTION REPORTS

A. Prepare a daily construction report, recording the following information concerning events at the site:
   1. List of subcontractors at the site.
   2. Approximate count of personnel at the site.
   3. High and low temperatures, general weather conditions.
   4. Accidents and unusual events.
   5. Meetings and significant decisions.
   6. Stoppages, delays, shortages, losses.
   7. Meter readings and similar recordings.
   8. Emergency procedures.
   9. Orders and requests of governing authorities.
   10. Change Orders received, implemented.
   11. Services connected, disconnected.
   12. Equipment or system tests and start-ups.
   13. Partial Completions, occupancies.
   14. Substantial Completions authorized.

1.07 SHOP DRAWINGS

A. Submit newly prepared information, drawn to accurate scale. Highlight, encircle, or otherwise indicate deviations from the Contract Documents. Do not reproduce Contract Documents or copy standard information as the basis of Shop Drawings. Standard information prepared without specific reference to the Project is not considered Shop Drawings.
   1. Sheet Size: Except for templates, patterns and similar full-size Drawings, submit Shop Drawings on sheets at least 8-1/2" x 11" but no larger than 24" x 36".

B. Shop Drawings include fabrication and installation drawings, setting diagrams, schedules, patterns, templates and similar drawings. Include the following information:
   1. Dimensions.
   2. Identification of products and materials included.
   3. Compliance with specified standards.
   4. Notation of coordination requirements.
   5. Notation of dimensions established by field measurement.

C. Submittal: Submit a minimum of 6 sets of blue- or black-line prints. Three prints will be retained; the remainder will be returned. Submit additional copies as required for contractor's use.

Attachment: Exhibit B - Fire Station #96 Project Manual (2023-R-55 : Fire Station Construction)

1. Maintain one of the marked-up prints returned, as a "Record Document".
2. Do not use Shop Drawings without an appropriate final stamp indicating action taken in connection with construction.
3. Only Final reviewed shop drawings which have been reviewed by the Architect and the design Structural Engineer shall be used for fabrication and the field installation of products or assemblies of products. Modification of reviewed shop drawings by the manufacturer or fabricator for “Field Use” is prohibited unless proposed modifications have been reviewed by the Architect.

D. Coordination drawings are a special type of Shop Drawing that show the relationship and integration of different construction elements that require careful coordination during fabrication or installation to fit in the space provided or function as intended.
1. Preparation of coordination Drawings is specified in section "Project Coordination" and may include components previously shown in detail on Shop Drawings or Product Data.
2. Submit coordination Drawings for integration of different construction elements. Show sequences and relationships of separate components to avoid conflicts in use of space.

1.08 PRODUCT DATA

A. Collect Product Data into a single submittal for each element of construction or system. Product Data includes printed information such as manufacturer's installation instructions, catalog cuts, standard color charts, roughing-in diagrams and templates, standard wiring diagrams and performance curves. Where Product Data must be specially prepared because standard printed data is not suitable for use, submit as "Shop Drawings."
1. Mark each copy to show applicable choices and options. Where printed Product Data includes information on several products, some of which are not required, mark copies to indicate the applicable information. Include the following information:
a. Manufacturer's printed recommendations.
b. Compliance with recognized trade association standards.
c. Compliance with recognized testing agency standards.
d. Application of testing agency labels and seals.
e. Notation of dimensions verified by field measurement.
f. Notation of coordination requirements.

B. Do not submit Product Data until compliance with requirements of the Contract Documents has been confirmed.

C. Submittals: Submit 3 copies of each required submittal; submit 4 copies where required for maintenance manuals. The Architect will retain two, and will return the other marked with action taken and corrections or modifications required.
1. Unless noncompliance with Contract Document provisions is observed, the submittal may serve as the final submittal.

D. Distribution: Furnish copies of final submittal to installers, subcontractors, suppliers, manufacturers, fabricators, and others required for performance of construction activities. Show distribution on transmittal forms.
1. Do not proceed with installation until an applicable copy of Product Data applicable is in the installer's possession.
2. Do not permit use of unmarked copies of Product Data in connection with construction.

1.09 SAMPLES

A. Submit full-size, fully fabricated Samples cured and finished as specified and physically identical with the material or product proposed. Samples include partial sections of manufactured or fabricated components, cuts or containers of materials, color range sets, and swatches showing color, texture and pattern.
1. Mount, display, or package Samples in the manner specified to facilitate review of qualities indicated. Prepare Samples to match the Architect's Sample. Include the following:
a. Generic description of the Sample.
b. Sample source.
c. Product name or name of manufacturer.

Attachment: Exhibit B - Fire Station #96 Project Manual (2023-R-55 : Fire Station Construction)

d. Compliance with recognized standards.
e. Availability and delivery time.

B. Submit Samples for review of kind, color, pattern, and texture, for a final check of these characteristics with other elements, and for a comparison of these characteristics between the final submittal and the actual component as delivered and installed.
1. Where variation in color, pattern, texture or other characteristics are inherent in the material or product represented, submit multiple units (not less than 3), that show approximate limits of the variations.
2. Refer to other Specification Sections for requirements for Samples that illustrate workmanship, fabrication techniques, details of assembly, connections, operation and similar construction characteristics.

C. Preliminary submittals: Where Samples are for selection of color, pattern, texture or similar characteristics from a range of standard choices, submit a full set of choices for the material or product.
1. Preliminary submittals will be reviewed and returned with the Architect's mark indicating selection and other action.

D. Submittals: Except for Samples illustrating assembly details, workmanship, fabrication techniques, connections, operation and similar characteristics, submit 2 sets; one will be returned marked with the action taken.

E. Maintain sets of Samples, as returned, at the Project site, for quality comparisons throughout the course of construction.
1. Unless noncompliance with Contract Document provisions is observed, the submittal may serve as the final submittal.
2. Sample sets may be used to obtain final acceptance of the construction associated with each set.

F. Distribution of Samples: Prepare and distribute additional sets to subcontractors, manufacturers, fabricators, suppliers, installers, and others as required for performance of the Work. Show distribution on transmittal forms.

G. Field Samples specified in individual Sections are special types of Samples. Field Samples are full-size examples erected on site to illustrate finishes, coatings, or finish materials and to establish the standard by which the Work will be judged.
1. Comply with submittal requirements to the fullest extent possible. Process transmittal forms to provide a record of activity.

1.10 ARCHITECT'S ACTION

A. Except for submittals for record, information or similar purposes, where action and return is required or requested, the Architect will review each submittal, mark to indicate action taken, and return promptly.
1. Compliance with specified characteristics is the Contractor's responsibility.

B. Action Stamp: The Architect will stamp each submittal with a uniform, self-explanatory action stamp. The stamp will be appropriately marked, as follows, to indicate the action taken:
1. Final Unrestricted Release: Where submittals are marked "Reviewed," that part of the Work covered by the submittal may proceed provided it complies with requirements of the Contract Documents; final acceptance will depend upon that compliance.
2. Final-But-Restricted Release: When submittals are marked "Furnish as Corrected," that part of the Work covered by the submittal may proceed provided it complies with notations or corrections on the submittal and requirements of the Contract Documents; final acceptance will depend on that compliance.
3. Returned for Resubmittal: When submittal is marked "Rejected or Revise and Resubmit," do not proceed with that part of the Work covered by the submittal, including purchasing, fabrication, delivery, or other activity. Revise or prepare a new submittal in accordance with the notations; resubmit without delay. Repeat if necessary to obtain a different action mark.

Attachment: Exhibit B - Fire Station #96 Project Manual (2023-R-55 : Fire Station Construction)

a. Do not permit submittals marked "Rejected or Revise and Resubmit" to be used at the Project site, or elsewhere where Work is in progress.

4. Other Action: Where a submittal is primarily for information or record purposes, special processing or other activity, the submittal will be returned, marked "Review Not Required". Where a submittal is marked also "Submit Specified Item", further submittal information is required.

PART 2 - PRODUCTS (NOT APPLICABLE).

PART 3 - EXECUTION (NOT APPLICABLE).

END OF SECTION

Attachment: Exhibit B - Fire Station #96 Project Manual (2023-R-55 : Fire Station Construction)

SECTION 017000
PROJECT CLOSEOUT

PART 1 - GENERAL

1.01 RELATED DOCUMENTS

A. Drawings and general provisions of Contract, including General and Supplementary Conditions and other Division-1 Specification Sections, apply to this Section.

1.02 SUMMARY

A. This Section specifies administrative and procedural requirements for project closeout, including but not limited to:
   1. Inspection procedures.
   2. Project record document submittal.
   3. Operating and maintenance manual submittal.
   4. Submittal of warranties.
   5. Final cleaning.
   6. Closeout requirements for specific construction activities are included in the appropriate Sections in Divisions-2 through -16.

1.03 SUBSTANTIAL COMPLETION

A. Preliminary Procedures: Before requesting inspection for certification of Substantial Completion, complete the following. List exceptions in the request.
   1. In the Application for Payment that coincides with, or first follows, the date Substantial Completion is claimed, show 100 percent completion for the portion of the Work claimed as substantially complete. Include supporting documentation for completion as indicated in these Contract Documents and a statement showing an accounting of changes to the Contract Sum.
      a. If 100 percent completion cannot be shown, include a list of incomplete items, the value of incomplete construction, and reasons the Work is not complete.
   2. Advise Owner of pending insurance change-over requirements.
   3. Submit specific warranties, workmanship bonds, maintenance agreements, final certifications and similar documents.
   4. Obtain and submit releases enabling the Owner unrestricted use of the Work and access to services and utilities; include occupancy permits, operating certificates and similar releases.
   5. Submit record drawings, maintenance manuals, final project photographs, damage or settlement survey, property survey, and similar final record information.
   6. Deliver tools, spare parts, extra stock, and similar items.
   7. Make final change-over of permanent locks and transmit keys to the Owner. Advise the Owner's personnel of change-over in security provisions.
   8. Complete start-up testing of systems, and instruction of the Owner's operating and maintenance personnel. Discontinue or change over and remove temporary facilities from the site, along with construction tools, mock-ups, and similar elements.
   9. Complete final clean up requirements, including touch-up painting. Touch-up and otherwise repair and restore marred exposed finishes.

B. Inspection Procedures: On receipt of a request for inspection, the Architect will either proceed with inspection or advise the Contractor of unfilled requirements. The Architect will prepare the Certificate of Substantial Completion following inspection, or advise the Contractor of construction that must be completed or corrected before the certificate will be issued.
   1. The Architect will repeat inspection when requested and assured that the Work has been substantially completed.
   2. Results of the completed inspection will form the basis of requirements for final acceptance.

C. Occupancy Inspection:

Attachment: Exhibit B - Fire Station #96 Project Manual (2023-R-55 : Fire Station Construction)

1. The Architect, contractor and owner's representative, will conduct an inspection of the work to be occupied. Upon approval, the owner may occupy that portion of the work. The contractor shall cooperate, and participate in this inspection.

1.04 FINAL ACCEPTANCE

A. Preliminary Procedures: Before requesting final inspection for certification of final acceptance and final payment, complete the following. List exceptions in the request.
   1. Submit the final payment request with releases and supporting documentation not previously submitted and accepted. Include certificates of insurance for products and completed operations where required.
   2. Submit an updated final statement, accounting for final additional changes to the Contract Sum.
   3. Submit a certified copy of the Architect's final inspection list of items to be completed or corrected, stating that each item has been completed or otherwise resolved for acceptance, and the list has been endorsed and dated by the Architect.
   4. Submit consent of surety to final payment.
   5. Submit a final liquidated damages settlement statement.
   6. Submit evidence of final, continuing insurance coverage complying with insurance requirements.

B. Reinspection Procedure: The Architect will reinspect the Work upon receipt of notice that the Work, including inspection list items from earlier inspections, has been completed, except items whose completion has been delayed because of circumstances acceptable to the Architect.
   1. Upon completion of reinspection, the Architect will prepare a certificate of final acceptance, or advise the Contractor of Work that is incomplete or of obligations that have not been fulfilled but are required for final acceptance.
   2. If necessary, reinspection will be repeated.

1.05 RECORD DOCUMENT SUBMITTALS

A. General: Do not use record documents for construction purposes; protect from deterioration and loss in a secure, fire-resistive location; provide access to record documents for the Architect's reference during normal working hours.

B. Record Drawings (As-built Plans): Maintain a clean, undamaged set of blue or black line white-prints of Contract Drawings and Shop Drawings. Mark the set to show the actual installation where the installation varies substantially from the Work as originally shown. Mark whichever drawing is most capable of showing conditions fully and accurately; where Shop Drawings are used, record a cross-reference at the corresponding location on the Contract Drawings. Give particular attention to concealed elements that would be difficult to measure and record at a later date.
   1. Mark record sets with red erasable pencil; use other colors to distinguish between variations in separate categories of the Work.
   2. Mark new information that is important to the Owner, but was not shown on Contract Drawings or Shop Drawings.
   3. Note related Addenda, Field Order and Change Order numbers where applicable.
   4. The Contractor shall employ a Drafting Service at or near completion of the project for conversion of the marked-up As-built plans to CAD drawings compatible with Architect’s/Owner's CAD capabilities. Coordinate with Architect to verify compatibility and obtain electronic copy of drawing documents.
   5. The document changes shall be kept up-to-date and will be reviewed by the Architect/Engineer at the monthly progress meetings. Monthly progress payments will not be approved until changes to "as-built" drawings are current.

C. The Contractor shall record all changes made in the field as a “hard copy” set, and shall forward both the completed electronic and “hard-copy” versions of "as-built" Construction Record documents to the Architect's office for the Owner's records. Also reference and include the final property survey and certification of underground systems as required by Section 01050.

Attachment: Exhibit B - Fire Station #96 Project Manual (2023-R-55 : Fire Station Construction)

D. Record Specifications: Maintain one complete copy of the Project Manual, including addenda, and one copy of other written construction documents such as Change Orders and modifications issued in printed form during construction. Mark these documents to show substantial variations in actual Work performed in comparison with the text of the Specifications and modifications. Give particular attention to substitutions, selection of options and similar information on elements that are concealed or cannot otherwise be readily discerned later by direct observation. Note related record drawing information and Product Data.
   1. Upon completion of the Work, submit record Specifications to the Architect for the Owner's records.

E. Maintenance Manuals: Organize operating and maintenance data into suitable sets of manageable size. Bind properly indexed data in individual heavy-duty 2-inch, 3-ring vinyl-covered binders, with pocket folders for folded sheet information. Mark appropriate identification on front and spine of each binder. Include the following types of information:
   1. Emergency instructions.
   2. Spare parts list.
   3. Copies of warranties.
   4. Wiring diagrams.
   5. Recommended "turn around" cycles.
   6. Inspection procedures.
   7. Shop Drawings and Product Data.
   8. Fixture lamping schedule.
   9. Submit three (3) sets of all maintenance manuals.

PART 2 - PRODUCTS (NOT APPLICABLE)

PART 3 - EXECUTION

3.01 CLOSEOUT PROCEDURES

A. Operating and Maintenance Instructions: Arrange for each installer of equipment that requires regular maintenance to meet with the Owner's personnel to provide instruction in proper operation and maintenance. If installers are not experienced in procedures, provide instruction by manufacturer's representatives. Include a detailed review of the following items:
   1. Maintenance manuals.
   2. Record documents.
   3. Spare parts and materials.
   4. Tools.
   5. Lubricants.
   6. Fuels.
   7. Identification systems.
   8. Control sequences.
   9. Hazards.
   10. Cleaning.
   11. Warranties and bonds.
   12. Maintenance agreements and similar continuing commitments.

B. As part of instruction for operating equipment, demonstrate the following procedures:
   1. Start-up.
   2. Shutdown.
   3. Emergency operations.
   4. Noise and vibration adjustments.
   5. Safety procedures.
   6. Economy and efficiency adjustments.
   7. Effective energy utilization.

C. Submit three (3) sets of all closeout documents (Maintenance Manuals, Warranties, and other similar documents).

Attachment: Exhibit B - Fire Station #96 Project Manual (2023-R-55 : Fire Station Construction)

3.02 FINAL CLEANING

A. General: General cleaning during construction is required by the General Conditions and included in Section "Temporary Facilities".

B. Cleaning: Employ experienced workers or professional cleaners for final cleaning. Clean each surface or unit to the condition expected in a normal, commercial building cleaning and maintenance program. Comply with manufacturer's instructions.

1. Complete the following cleaning operations before requesting inspection for Certification of Substantial Completion.
   a. Remove labels that are not permanent labels.
   b. Clean transparent materials, including mirrors and glass in doors and windows. Remove glazing compound and other substances that are noticeable vision-obscuring materials. Replace chipped or broken glass and other damaged transparent materials.
   c. Clean exposed exterior and interior hard-surfaced finishes to a dust-free condition, free of stains, films and similar foreign substances. Restore reflective surfaces to their original reflective condition. Leave concrete floors broom clean. Vacuum carpeted surfaces.
   d. Wipe surfaces of mechanical and electrical equipment. Remove excess lubrication and other substances. Clean plumbing fixtures to a sanitary condition. Clean light fixtures and lamps.
   e. Clean the site, including landscape development areas, of rubbish, litter and other foreign substances. Sweep paved areas broom clean; remove stains, spills and other foreign deposits. Rake grounds that are neither paved nor planted, to a smooth even-textured surface.
2. Removal of Protection: Remove temporary protection and facilities installed for protection of the Work during construction.
3. Compliance: Comply with regulations of authorities having jurisdiction and safety standards for cleaning. Do not burn waste materials. Do not bury debris or excess materials on the Owner's property. Do not discharge volatile, harmful or dangerous materials into drainage systems. Remove waste materials from the site and dispose of in a lawful manner.
   a. Where extra materials of value remaining after completion of associated Work have become the Owner's property, arrange for disposition of these materials as directed.

END OF SECTION

Attachment: Exhibit B - Fire Station #96 Project Manual (2023-R-55 : Fire Station Construction)

SECTION 061000
ROUGH CARPENTRY

PART 1 GENERAL

1.01 SECTION INCLUDES

A. Concealed wood blocking, nailers, and supports.

B. Refer to Structural Drawings for all structural framing requirements.

1.02 REFERENCE STANDARDS

A. AFPA (WFCM) - Wood Frame Construction Manual
   1. PS 20 - American Softwood Lumber Standard; 2010.

1.03 DELIVERY, STORAGE, AND HANDLING

A. General: Cover wood products to protect against moisture. Support stacked products to prevent deformation and to allow air circulation.

PART 2 PRODUCTS

2.01 GENERAL REQUIREMENTS

A. Dimension Lumber: Comply with PS 20 and requirements of specified grading agencies.
   1. If no species is specified, provide any species graded by the agency specified; if no grading agency is specified, provide lumber graded by any grading agency meeting the specified requirements.
   2. Grading Agency: Any grading agency whose rules are approved by the Board of Review, American Lumber Standard Committee (www.alsc.org) and who provides grading service for the species and grade specified; provide lumber stamped with grade mark unless otherwise indicated.

B. Lumber fabricated from old growth timber is not permitted.

2.02 ACCESSORIES

A. Fasteners and Anchors:
   1. Metal and Finish: Stainless steel for high humidity and preservative-treated wood locations, unfinished steel elsewhere.
   2. Drywall Screws: Bugle head, hardened steel, power driven type, length three times thickness of sheathing.

PART 3 EXECUTION

3.01 INSTALLATION - GENERAL

A. Select material sizes to minimize waste.

B. Reuse scrap to the greatest extent possible; clearly separate scrap for use on site as accessory components, including: shims, bracing, and blocking.

3.02 FRAMING INSTALLATION

A. Select material sizes to minimize waste.

B. Set members level, plumb, and true to line. Discard pieces with defects that would lower required strength or result in unacceptable appearance of exposed members.

C. Install members full length without splices unless otherwise specifically detailed.

D. Comply with member sizes, spacing, and configurations indicated, and fastener size and spacing indicated, but not less than required by applicable codes and AFPA Wood Frame Construction Manual.

3.03 BLOCKING, NAILERS, AND SUPPORTS

A. Provide framing and blocking members as indicated or as required to support finishes, fixtures, specialty items, and trim.

Attachment: Exhibit B - Fire Station #96 Project Manual (2023-R-55 : Fire Station Construction)

B. In walls, provide blocking attached to studs as backing and support for wall-mounted items, unless item can be securely fastened to two or more studs or other method of support is explicitly indicated.

C. Provide the following specific nonstructural framing and blocking:
   1. Cabinets and shelf supports.

3.04 ROOF-RELATED CARPENTRY

A. Coordinate installation of roofing carpentry with deck construction, framing of roof openings, and roofing assembly installation.

3.05 CLEANING

A. Waste Disposal:.
   1. Comply with applicable regulations.
   2. Do not burn scrap on project site.
   3. Do not burn scraps that have been pressure treated.
   4. Do not send materials treated with pentachlorophenol, CCA, or ACA to co-generation facilities or “waste-to-energy” facilities.

B. Do not leave any wood, shavings, sawdust, etc. on the ground or buried in fill.

C. Prevent sawdust and wood shavings from entering the storm drainage system.

END OF SECTION

Attachment: Exhibit B - Fire Station #96 Project Manual (2023-R-55 : Fire Station Construction)

SECTION 064100
ARCHITECTURAL WOOD MILLWORK

PART 1 GENERAL

1.01 SECTION INCLUDES

A. Specially fabricated solid wood cabinet units.

B. Countertops.

C. Cabinet hardware.

D. Preparation for installing utilities.

1.02 RELATED REQUIREMENTS

A. Section 061000 - Rough Carpentry: Blocking for mounting of cabinets.

B. Section 09116 - Gypsum Board Assemblies.

C. Section 099000 - Painting.

1.03 REFERENCE STANDARDS

A. AWI/AWMAC (QSI) - Architectural Woodwork Quality Standards Illustrated; Architectural Woodwork Institute

1.04 SUBMITTALS

A. See Section 010100 for submittal procedures.

B. Shop Drawings: Indicate materials, component profiles and elevations, assembly methods, joint details, fastening methods, accessory listings, hardware location and schedule of finishes.

C. Product Data: Provide product data for specified hardware accessories.

1.05 QUALITY ASSURANCE

A. Perform work in accordance with AWI/AWMAC Architectural Woodwork Quality Standards Illustrated, Premium quality, unless other quality is indicated for specific items.

B. Perform cabinet construction in accordance with AWI/AWMAC Architectural Woodwork Quality Standards Illustrated, Premium quality, unless other quality is indicated for specific items.

C. Manufacturer Qualifications: Company specializing in manufacturing the products specified in this section with minimum five years of documented experience.

D. Manufacturer Qualifications: Member in good standing of the Architectural Woodwork Institute (AWI) or the Architectural Woodwork Manufacturers Association of Canada (AWMAC) and familiar with the AWI/AWMAC QSI.

E. Quality Certification: Provide inspection and quality certification of completed custom cabinets in accordance with AWI/AWMAC Quality Certification Program.

1.06 DELIVERY, STORAGE, AND HANDLING

A. Protect units from moisture damage and other types of damage.

1.07 FIELD CONDITIONS

A. During and after installation of custom cabinets, maintain temperature and humidity conditions in building spaces at same levels planned for occupancy.

1.08 EXTRA MATERIALS

A. Provide one box of each type of shelf support bracket and/or pin.

PART 2 PRODUCTS

2.01 WOOD-BASED COMPONENTS

A. Wood fabricated from old growth timber is not permitted.

Attachment: Exhibit B - Fire Station #96 Project Manual (2023-R-55 : Fire Station Construction)

2.02 LUMBER MATERIALS

A. Hardwood Lumber: NHLA; Graded in accordance with, Grade I/Premium; average moisture content of 4-9 percent; species as follows:
   1. Exposed Stiles and Rails: Species - Birch, Quarter or Rift Sliced.
   2. Semi-Exposed Surfaces: Species - Birch, Plain Sliced.
   3. Concealed Surfaces: Species - Any allowed by AWI.

2.03 PANEL MATERIALS

A. Veneer Faced Plywood Finish: HPVA HP-1; graded in accordance with AWI/AWMAC Architectural Woodwork Quality Standards Illustrated, core of veneer (wood plies); type of glue recommended for specific application; thickness as required; face veneer as follows:
   1. Exposed Surfaces: Grade A, Birch, quarter cut, book-matched.
   2. Semi-Exposed Surfaces: Grade A, Birch, plain sliced, random-matched.
   3. Concealed Surfaces: Grade B, Any species allowed by AWI, rotary cut, random-matched.

B. Hardwood Edgebanding: Use solid hardwood edgebanding matching species, color, grain, and grade for exposed portions of cabinetry.

2.04 COUNTERTOPS

A. Solid Surfacing Counter Tops and decorative edging:
   1. Manufacturer: Zodiaq by Dupont., www.dupont.com.
      a. Substitutions: See Section 01600 - Product Requirements.
   2. Thickness: 1/2 inch.
   3. Colors: As selected from manufacturer's full range of standard colors.

2.05 ACCESSORIES

A. Adhesive: GSA CID A-A-1936 contact adhesive.

B. Fasteners: Size and type to suit application.

C. Bolts, Nuts, Washers, Lags, Pins, and Screws: Of size and type to suit application; galvanized or chrome-plated finish in concealed locations and stainless steel or chrome-plated finish in exposed locations.

D. Concealed Joint Fasteners: Threaded steel.

E. Grommets: plastic material for cut-outs. 2-inch size unless noted otherwise on drawings. Locate as indicated on drawings.

F. Door and Drawer Silencers: Rubber or neoprene "button" type, installed at all locations.

G. Counter Supports: Provide steel as indicated on drawings to provide support of counter tops. Include additional steel as needed to provide necessary support when not shown.

2.06 HARDWARE

A. Shelf Standards and Rests: recessed metal shelf standards. Install at all locations indicated on drawings, unless noted otherwise.

B. Shelf Standards and Rests: multiple holes for pin supports. Install only at specific locations indicated on drawings.

C. Drawer and Door Pulls: Aluminum with saitin finish, unless indicated otherwise on drawings.
   1. "U" Shape Pull, 4" centers, Hafele, Model 116.05.922, or equal. Install at all locations except as listed below.
   2. Extruded Pull, 4" wide, Hafele, Model 124.02.920, or equal. Install only as indicated on drawings. Fully mortise into top of drawer front.

D. Cabinet Locks: Keyed cylinder, two keys per lock, master keyed, steel with satin finish. Provide all parts and pieces necessary for a full and complete installation. Determine model number by application.
   1. Single Doors/Drawers: Hafele, Cylinder Module System, Dead Bolt Lock, or equal.
   2. Double Doors: Hafele, Cylinder Module System, Double Dead Bolt Lock, or equal.

Attachment: Exhibit B - Fire Station #96 Project Manual (2023-R-55 : Fire Station Construction)

3. Multiple Drawers: Hafele, Cylinder Module System, Central Locking Single Pedestal, Front Mount, or equal.
4. Keying:
   a. Key all cabinets within a room identically.
   b. Furnish 5 keys for each room.
   c. Furnish 5 master keys.

E. Catches: Touch type.
1. Hafele, Model 245.50.301, or equal. Install where indicated on drawings.

F. Drawer Slides: Side mounted. Hafele Accuride, or equal. Rated for the following loads:
1. Box Drawer Slides: 100 lbf.
2. File Drawer Slides: 150 lbf.
3. Pencil Drawer Slides: 45 lbf.

G. Hinges: Frameless concealed (European) type, 95 degrees of opening.
1. Hafele, Model 329.01.509, or equal. Self-closing type. Install at all locations except as listed below.
2. Hefele, Model 329.00.502, or equal. Free-swinging type. Install at flipper/pocket doors only.

2.07 FABRICATION

A. Cabinet Style: Flush overlay.

B. Cabinet Doors and Drawer Fronts: Flush style.

C. Drawer Construction Technique: Dovetail joints.

D. Assembly: Shop assemble cabinets for delivery to site in units easily handled and to permit passage through building openings.

E. Edging: Fit shelves, doors, and exposed edges with specified edging. Do not use more than one piece for any single length.

F. Fitting: When necessary to cut and fit on site, provide materials with ample allowance for cutting. Provide matching trim for scribing and site cutting.

G. Plastic Laminate: Apply plastic laminate finish in full uninterrupted sheets consistent with manufactured sizes. Fit corners and joints hairline; secure with concealed fasteners. Slightly bevel arises. Locate counter butt joints minimum 2 feet from sink cut-outs.
1. Apply laminate backing sheet to reverse side of plastic laminate finished surfaces.
2. Cap exposed plastic laminate finish edges with scheduled solid surfacing edging.

H. Provide cutouts for louvers, plumbing fixtures, inserts, appliances, outlet boxes, and fixtures and fittings. Verify locations of cutouts from on-site dimensions. Prime paint cut edges.

PART 3 EXECUTION

3.01 EXAMINATION

A. Verify adequacy of backing and support framing.

B. Coordinate sizes and locations of framing, blocking, furring, reinforcements, and other related units of Work specified in other Sections to ensure that interior architectural woodwork can be supported and installed as indicated.

C. Verify location and sizes of utility rough-in associated with work of this section.

3.02 INSTALLATION

A. Set and secure custom cabinets in place, assuring that they are rigid, plumb, and level.

B. Use fixture attachments in concealed locations for wall mounted components.

C. Use concealed joint fasteners to align and secure adjoining cabinet units and countertops.

D. Carefully scribe casework abutting other components, with maximum gaps of 1/32 inch. Do not use additional overlay trim for this purpose.

E. Secure cabinets to floor using appropriate angles and anchorages.

Attachment: Exhibit B - Fire Station #96 Project Manual (2023-R-55 : Fire Station Construction)

F. Countersink anchorage devices at exposed locations. Conceal with solid wood plugs of species to match surrounding wood; finish flush with surrounding surfaces.

G. Install deal trays where indicated on drawings. Fully mortise into countertop with countersunk fasteners to acheive flush appearance.

H. Install inlaid metal plates of sizes indicated at locations shown on drawings. Fully mortise into countertop with countersunk fasteners to acheive flush appearance.

I. Coordinate with installation of coiling counter doors.

J. Coordinate with installation of security windows where indicated.

K. Coordinate installation of display case door system where indicated.

L. Coordinate installation of glass shelves and cable support system at display case.

3.03 ADJUSTING

A. Test installed work for rigidity and ability to support loads.

B. Adjust moving or operating parts to function smoothly and correctly.

3.04 CLEANING

A. Clean casework, counters, shelves, hardware, fittings, drawer and cabinet interiors, and fixtures.

END OF SECTION

Attachment: Exhibit B - Fire Station #96 Project Manual (2023-R-55 : Fire Station Construction)

SECTION 072100
BUILDING INSULATION

PART 1 GENERAL

1.01 SECTION INCLUDES

A. Rigid insulation on interior side of exterior wall construction.

B. Batt insulation for filling perimeter window and door shim spaces and crevices in exterior wall and roof.

C. Spray-on Insulation under roof deck.

1.02 REFERENCE STANDARDS

A. ASTM C1289 - Standard Specification for Faced Rigid Cellular Polyisocyanurate Thermal Insulation Board; 2014.

B. ASTM E84 - Standard Test Method for Surface Burning Characteristics of Building Materials; 2015a.

C. ASTM E136 - Standard Test Method for Behavior of Materials in a Vertical Tube Furnace At 750 Degrees C; 2012.

1.03 SUBMITTALS

A. See Section 013000 - Administrative Requirements, for submittal procedures.

B. Product Data: Provide data on product characteristics, performance criteria, and product limitations.

C. Manufacturer's Installation Instructions: Include information on special environmental conditions required for installation and installation techniques.

D. Manufacturer's Certificate: Certify that products meet or exceed specified requirements.

1.04 FIELD CONDITIONS

A. Do not install insulation adhesives when temperature or weather conditions are detrimental to successful installation.

1.05 SEQUENCING

A. Sequence work to ensure fireproofing and firestop materials are in place before beginning work of this section.

PART 2 PRODUCTS

2.01 POLYISO WALL INSULATION

A. Polyisocyanurate Board Insulation: Rigid cellular foam, complying with ASTM C1289; Type I, aluminum foil both faces; Class 1, non-reinforced foam core.
   1. Flame Spread Index: 75 or less, when tested in accordance with ASTM E84.
   2. Smoke Developed Index: 450 or less, when tested in accordance with ASTM E84.
   3. Board Thickness: 2 1/2" inch.
   4. Manufacturers:
      a. Dow Chemical Company; THERMAX Brand _____: www.dowbuildingsolutions.com/#sle.
      b. Rmax Inc.; ECOMAXci: www.rmax.com/#sle.

2.02 BATT INSULATION MATERIALS

A. Batt Insulation: ASTM C 665; preformed batt; friction fit, conforming to the following:
   1. Material: Glass or mineral fiber.
   2. Flame Spread Index: 25 or less, when tested in accordance with ASTM E84.
   3. Smoke Developed Index: 450 or less, when tested in accordance with ASTM E84.
   4. Combustibility: Non-combustible, when tested in accordance with ASTM E136, except for facing, if any.
   5. Formaldehyde Content: Zero.

Attachment: Exhibit B - Fire Station #96 Project Manual (2023-R-55 : Fire Station Construction)

6. Thermal Resistance: R of 19.
7. Thickness: 4 inch. (See Plan)
8. Facing: Unfaced.
9. Manufacturers:
    a. CertainTeed Corporation: www.certainteed.com/#sle.
    b. Johns Manville Corporation: www.jm.com/#sle.
    c. Owens Corning Corp: www.owenscorning.com.

2.03 SPRAY-ON INSULATION

A. International Cellulose Corporation, Houston, Texas, K-13 Spray-on System, sprayed cellulose thermal insulation. Provide where indicated on ribbed metal deck at an average thickness of 5" from bottom face of metal deck. Standard tan color.
    1. Submittals: Product data and manufacturer's certificate that product meets or exceeds specified requirements and that product contains no asbestos, fiberglass or other man-made mineral fibers.
    2. Applicator: Licensed by manufacturer.
    3. Delivery, Storage and Handling: Deliver in original, unopened containers bearing the name of the manufacturer, product identification and reference to U. L. testing. Store materials dry, off ground, and under cover. Protect liquid adhesive from freezing.
    4. Comply with ASTM E-736 for field-tested bond strength; tested @>5 years:
        a. a. Not less than 400 psf
        b. b. Not less than 600 times its weight @ 1"
    5. Comply with ASTM E-84/U.L. 723, Tested at a minimum of 5" thickness Class 1
        a. Flame Spread:5(Class 1)
            1) Smoke Development:5(Class 1)
    6. Comply with ASTM E-1042.

PART 3 EXECUTION

3.01 EXAMINATION

A. Verify that substrate, adjacent materials, and insulation materials are dry and that substrates are ready to receive insulation and adhesive.

B. Verify substrate surfaces are flat, free of honeycomb, fins, irregularities, or materials or substances that may impede adhesive bond.

3.02 BATT INSTALLATION

A. Install insulation in accordance with manufacturer's instructions.

B. Install in exterior wall and roof spaces without gaps or voids. Do not compress insulation.

C. Trim insulation neatly to fit spaces. Insulate miscellaneous gaps and voids.

D. Fit insulation tightly in cavities and tightly to exterior side of mechanical and electrical services within the plane of the insulation.

3.03 PROTECTION

A. Do not permit installed insulation to be damaged prior to its concealment.

END OF SECTION

Attachment: Exhibit B - Fire Station #96 Project Manual (2023-R-55 : Fire Station Construction)

SECTION 074100
PREFORMED METAL STANDING SEAM ROOFING

PART 1 - GENERAL

1.01 DESCRIPTION OF WORK

A. This section covers the pre-finished, pre-fabricated Architectural standing seam roof system. All metal trim, accessories, fasteners, insulation and sealants indicated on the drawings as part of this section.

B. Drawings and general provisions of the Contract, including general and Supplementary Conditions and Division 01 Specifications, apply to this section.

1.02 SUMMARY

A. Section Includes
   1. Factory formed Standing Seam metal roof panels

B. Related work specified elsewhere.
   1. Section 076000 - Flashing and Sheet Metal

1.03 DEFINITIONS

A. Metal Roof Panel Assembly: Metal roof panels, attachment system components, miscellaneous metal framing, thermal, and accessories necessary for a complete weathertight roofing system.

B. References:
   1. American Society for Testing and Materials (ASTM)
      a. ASTM A 653: Steel Sheet, Zinc Coated by the Hot Dip Process
      b. ASTM A 792: Steel Sheet, Aluminum-Zinc Alloy Coated by the Hot Dip Process
      c. ASTM B 209: Aluminum and Aluminum Alloy Sheet and Plate
      d. ASTM B370 Standard Specification for Copper Sheet and Strip for Building Construction
   2. Sheet Metal and Air Conditioning Contractors National Association (SMACNA)
      a. SMACNA Architectural Sheet Metal Manual, 1993 edition
   3. American Iron and Steel Institute (AISI)
      a. AISI Cold Formed Steel Design Manual
   4. Aluminum Association
      a. Aluminum Design Manual
   5. Metal Construction Association
      a. Preformed metal Wall Guidelines
   6. Code References
      a. ASCE, Minimum Loads for Buildings and Other Structures
      b. BOCA National Building Codes
      c. UBC Uniform Building Code
      d. SBC Standard Building Code

1.04 QUALITY ASSURANCE

A. Petersen Aluminum Corp, Acworth, GA, 800-272-4482 products establish a minimum of quality required.

B. Manufacturer and erector shall demonstrate experience of a minimum of five (5) years in this type of project.

1.05 SUBSTITUTIONS

A. The material, products and equipment specified in this section establish a standard for required function, dimension, appearance and quality to be met by any proposed substitution.

1.06 SYSTEM DESCRIPTION

A. Material to comply with:
   1. ASTM B209 Standard Specification for Aluminum and Aluminum-Alloy Sheet and Plate

Attachment: Exhibit B - Fire Station #96 Project Manual (2023-R-55 : Fire Station Construction)

1.07 ROOF SYSTEM PERFORMANCE TESTING

A. General Performance: Metal roof panels shall comply with performance requirements without failure due to defective manufacture, fabrication, installation or other defects in construction.

B. Roof System shall be designed to meet Wind Load requirements as specified on the structural documents.

C. Provide current Florida Product Approval Number or local product approval as required by building department.

D. Panels to meet:
   1. Water Penetration: When tested per ASTM E-283/1680 and ASTM E-331/1646 there shall be no uncontrolled water penetration or air infiltration through the panel joints.
   2. Roof System shall be designed to meet a UL Class 90 wind uplift in accordance with UL standard 580 and panel system shall be ASTM 1592 Tested and approved
   3. UL 2218 - Impact Resistance rated

1.08 WARRANTIES

A. Weathertight warranty: Manufacturer's standard form in which manufacturer agrees to repair or replace standing seam metal roof panel assemblies that fail to remain weathertight, including leaks, within specified warranty period.
   1. Warranty Period: 20 Years from date of Substantial Completion

B. Finish warranty: Manufacturer's standard form in which manufacturer agrees to repair finish or replace standing seam metal roof panels that show evidence of deterioration of factory-applied finish within specified warranty period.
   1. Exposed Panels Finish - deterioration includes the following:
      a. Color fading more than 5 hunter units when tested according to ASTM D 2244
      b. Chalking in excess of a No. 8 rating when tested according to ASTM D 4214
      c. Cracking, checking, peeling or failure of a paint to adhere to a bare metal.
   2. Warranty Period: 20 Years from the date of substantial completion

C. Applicator shall furnish written warranty for a two (2) year period from date of substantial completion of building covering repairs required to maintain roof and flashings in watertight condition.

1.09 SUBMITTALS

A. Furnish detailed drawings showing profile and gauge of exterior sheets, location and type of fasteners, location, gauges, shape and method of attachment of all trim locations and types of sealants, and any other details as may be required for a weather-tight installation.

B. Provide finish samples of all colors specified.

C. Shop drawings: Show fabrication and installation layouts of metal roof panels, metal wall panels or metal soffit panels, details of edge conditions, side-seam joints, panel profiles, corners, anchorages, trim, flashings, closures and accessories, and special details. Distinguish between factory and field-assembled work

D. Coordination Drawings: Roof plans, drawn to scale, on which the following are shown and coordinated with each other, base don input from installer of the items involved:
   1. Roof panels and attachments
   2. Metal trusses, bracings and supports
   3. Roof-mounted items including snow guards and items mounted on roof curbs.

1.10 DELIVERY, STORAGE AND HANDLING

A. Ordering: Comply with manufacturer's ordering instruction and lead time requirements to avoid construction delays.

B. Deliver components, sheets, metal roof panels and other manufactured items so as not to be damaged or deformed. Package metal roof panels for protection during transportation and handling.

Attachment: Exhibit B - Fire Station #96 Project Manual (2023-R-55 : Fire Station Construction)

C. Unload, store and erect metal roof panels in a manner to prevent bending, warping, twisting and surface damage.

D. Stack metal roof panels on platforms or pallets, covered with suitable weathertight and ventilated covering. Store metal roof panels to ensure dryness. Do not store metal roof panels in contact with other materials that might cause staining, denting or other surface damage.

E. Protect strippable protective coating on any metal coated product from exposure to sunlight and high humidity, except to the extent necessary for material installation.

1.11 PROJECT CONDITIONS

A. Weather Limitations: proceed with installation only when existing and forecasted weather conditions permit metal roof panel work to be performed.

B. Field Measurements: Verify actual dimensions of construction contiguous with metal roof panels by field measurements before fabrication.

1.12 COORDINATION

A. Coordinate sizes and locations of roof curbs, equipment supports and roof penetrations with actual equipment provided.

B. Coordinate metal roof panels with rain drainage work, flashing, trim and construction of decks, parapet walls and other adjoining work to provide a leakproof, secure and noncorrosive installation.

PART 2 - PRODUCTS

2.01 PANEL DESIGN

A. General: Provide factory-formed metal roof panels designed to be installed by lapping and interconnecting raised side edges of adjacent panels with joint type indicated and mechanically attaching panels to supports using concealed clips in side laps. Include clips, cleats, pressure plates and accessories required for a weathertight installation.

B. Roof panels shall be standing seam Tite-Loc Plus in 18" widths with 2" high seams that are mechanically seamed together @ 180 degrees.

C. Panels to be produced with Factory supplied hot melt mastic in the seams.

D. Panels to be produced Smooth - Factory Standard.

E. Panels to be designed for attachment with concealed fastener clips, spaced as required by the manufacturer to provide for both positive and negative design loads, while allowing for the expansion and contraction of the entire roof system resulting from variations in temperature.

F. Forming: Use continuous end rolling method. No end laps on panels.

2.02 ACCEPTABLE MANUFACTURERS

A. This project is detailed around the roofing product of Petersen Aluminum Corporation Petersen Aluminum Corp, Acworth, GA, 800-272-4482, Tite-Loc Plus.

B. Alternate Manufacturers:
   1. Merchant and Evans
   2. Bemo Usa
   3. Imetco

2.03 MATERIALS AND FINISHES

A. Preformed roofing panels shall be fabricated of .040 Aluminum

B. Color shall be as selected by Architect.

C. Finish shall be Kynar 500 or Hylar 5000 Fluorocarbon coating with a top side film thickness of 0.70 to 0.90 mil over a 0.25 to 0.3 mil prime coat to provide a total dry film thickness of 0.95 to 1.25 mil, to meet AAMA 621. Bottom side shall be coated with a primer with a dry film thickness of 0.25 mil. Finish shall conform to all tests for adhesions, flexibility and longevity as specified by Kynar 500 or Hylar 5000 finish supplier.

Attachment: Exhibit B - Fire Station #96 Project Manual (2023-R-55 : Fire Station Construction)

D. If Strippable coating to be applied on the pre-finished panels to the top side to protect the finish during fabrication, shipping and handling, film shall be removed before installation.

E. Trim: Trim shall be fabricated of the same material and finish to match the profile, and will be press broken in lengths of 10 to 12 feet. Trim shall be formed only by the manufacturer of their approved dealer. Trim to be erected in overlapped condition. Use lap strips only as indicated on drawings. Miter conditions shall be factory welded material to match the sheeting.

F. Closures: use composition or metal profiled closures at the top of each elevation to close ends of the panels. Metal closures to be made in the same material and finish as face sheet.

G. Fasteners: Fasteners shall be of type, material, size, corrosion resistance, holding power and other properties required to fasten miscellaneous framing members to substrates.

H. Substrate shall be Plywood

I. Roofing Underlayment
   1. On all surfaces to be covered with roofing material, furnish and install a 40 mil "Peel & Stick membrane", required as outlined by metal panel manufacturer. Membrane to be a minimum of 40 mil thickness, smooth, non-granular, by one of the following manufacturers:
      a. W.R Grace "Ice & water Shield"
      b. Cetco Strongseal
      c. Carlisle CCW WIP 300HT
      d. Interwrap Titanium PSU
      e. MFM Corp "Wind & Water Shield"
      f. Polyguard Deck Guard HT of Polyglas HT
      g. Tamko TW Tile and Metal Underlayment
   2. Underlayment shall be laid in horizontal layers with joints lapped toward the eaves a minimum of 6", and well secured along laps and at ends as necessary to properly hold the felt in place. All underlayment shall be preserved unbroken and whole.
   3. Ice and Water Shield shall lap all hips and ridges at least 12" to form double thickness and shall be lapped 6" over the metal of any valley or built-in gutters and shall be installed as required by the Standing Seam Panel Manufacturer to attain the desired 20 Year Weathertightness Warranty.

J. Sealants
   1. Provide two-part polysulfide class B non-sag type for vertical and horizontal joints or
   2. one part polysulfide not containing pitch or phenolic extenders or
   3. Exterior grade silicone sealant recommended by roofing manufacturer or
   4. One part non-sag, gun grade exterior type polyurethane recommended by the roofing manufacturer.

2.04 FABRICATION

A. Comply with dimensions, profile limitations, gauges and fabrication details shown and if not shown, provide manufacturer's standard product fabrication.

B. Fabricate components of the system in factory, ready for field assembly.

C. Fabricate components and assemble units to comply with fire performance requirements specified.

D. Apply specified finishes in conformance with manufacturer's standard, and according to manufacturer's instructions.

PART 3 - EXECUTION

3.01 INSPECTION

A. Examine alignment of structural steel and related supports, primary and secondary roof framing, solid roof sheathing, prior to installation.

B. For the record, prepare written report, endorsed by installer, listing conditions detrimental to performance of the Work.

C. Proceed with installation only after unsatisfactory conditions have been corrected.

Attachment: Exhibit B - Fire Station #96 Project Manual (2023-R-55 : Fire Station Construction)

3.02 FASTENERS

A. Secure units to supports per FPA testing.

B. Place fasteners as indicated in manufacturer's standards and as required by testing.

3.03 INSTALLATION

A. Panels shall be installed plumb and true in a proper alignment and in relation to the structural framing. The erector must have at least five years successful experience with similar applications.

B. Install metal panels, fasteners, trim and related sealants in accordance with approved shop drawings and as may be required for a weather-tight installation.

C. Remove all strippable coating and provide a dry-wipe down cleaning of the panels as they are erected.

3.04 DAMAGED MATERIAL

A. Upon determination of responsibility, repair or replace damaged metal panels and trim to the satisfaction of the Architect and Owner.

END OF SECTION

Attachment: Exhibit B - Fire Station #96 Project Manual (2023-R-55 : Fire Station Construction)

SECTION 076000
FLASHING AND SHEET METAL

GENERAL:

1.01 RELATED DOCUMENTS

A. Drawings and general provisions of Contract, including General and Supplementary Conditions and Division-1 Specification Sections, apply to this Section.

1.02 CONFORM TO PROFILES AND SIZES SHOWN ON DRAWINGS, AND COMPLY WITH "ARCHITECTURAL SHEET METAL MANUAL" BY SMACNA, FOR EACH GENERAL CATEGORY OF WORK REQUIRED.

A. Metal flashing and counter flashing.

B. Miscellaneous sheet metal accessories.

1.03 PRODUCTS:

A. All flashing and sheet metal shall be stainless steel; 0.050 inch.

B. Fabricate stainless steel with flat-lock seams; seal seams with epoxy metal seam cement and, where required for strength, rivet seams and joints.

C. Provide for thermal expansion of running stainless steel work by overlaps of expansion joints in fabricated work. Where required for water-tight construction, provide hooked flanges filled with polyisobutylene mastic for 1-inch embedment of flanges. Space joints at intervals of not more than 30 feet for stainless steel. Conceal expansion provisions where possible.

1. Separate stainless steel from contact with cementitious and absorptive surfaces, and from dissimilar metals, by a 15-mil coating of bituminous mastic (SSPC - Paint 12) or other permanent separation.

D. Stainless Steel Accessories: Provide stainless steel clips, straps, anchoring devices and similar accessory units as required for installation of work, matching or compatible with material being installed, noncorrosive, size and gage required for performance.

1.04 EXECUTION:

A. Anchor work in place with noncorrosive fasteners, adhesives, setting compounds, tapes and other materials and devices as recommended by manufacturer of each material or system. Provide for thermal expansion and building movements. Comply with recommendations of "Architectural Sheet Metal Manual" by SMACNA.

B. Seal moving joints in metal work with elastomeric joint sealants, complying with requirements specified in Division 7 Section "Joint Sealants."

C. Clean metal surfaces of soldering flux and other substances which could cause corrosion.

D. Performance: Water-tight and weatherproof performance of flashing and sheet metal work is required.

END OF SECTION

Attachment: Exhibit B - Fire Station #96 Project Manual (2023-R-55 : Fire Station Construction)

SECTION 079000
JOINT SEALERS

PART 1 - GENERAL

1.01 RELATED DOCUMENTS:

A. Drawings and general provisions of Contract, including General and Supplementary Conditions and Division 1 Specification Sections, apply to this Section.

1.02 SUMMARY:

A. Extent of each form and type of joint sealer is indicated on drawings and schedules.

1.03 THIS SECTION INCLUDES JOINT SEALERS FOR THE FOLLOWING LOCATIONS:

A. Exterior joints in vertical surfaces and nontraffic horizontal surfaces as indicated below.
   1. Control and expansion joints in unit masonry.
   2. Perimeter joints between unit masonry and frames of doors and windows.
   3. Other joints as indicated.

B. Exterior joints in horizontal traffic surfaces as indicated below.
   1. Control, expansion, and isolation joints in cast-in-place concrete sidewalks.
   2. Other joints as indicated.

C. Interior joints in vertical surfaces and horizontal nontraffic surfaces as indicated below:
   1. Control and expansion joints on exposed interior surfaces of exterior walls.
   2. Perimeter joints between unit masonry/concrete and roof system.
   3. Perimeter joints of exterior openings where indicated.
   4. Vertical control joints on exposed surfaces of interior unit masonry and concrete walls and partitions.
   5. Perimeter joints between interior wall surfaces and frames of interior doors, and windows.
   6. Perimeter joints of toilet fixtures.
   7. Other joints as indicated.

D. Interior joints in horizontal traffic surfaces as indicated below:
   1. Control and expansion joints in cast-in-place concrete slabs.
   2. Other joints as indicated.
   3. Sealing joints related to flashing and sheet metal for roofing is specified in another Division-7 Section.
   4. Sealants for glazing purposes are specified in Division-8 Section "Glass and Glazing."
   5. Sealing concealed perimeter joints of gypsum drywall partitions to reduce sound transmission characteristics is specified in Division-9 Section "Gypsum Drywall."
   6. Sealing tile joints is specified in Division-9 Section "Tile."

1.04 SYSTEM PERFORMANCES:

A. Provide joint sealers that have been produced and installed to establish and maintain watertight and airtight continuous seals.

1.05 SUBMITTALS:

A. Product Data from manufacturers for each joint sealer product required, including instructions for joint preparation and joint sealer application.

B. Samples for Initial Selection Purposes: Manufacturer's standard samples consisting of strips of actual products showing full range of colors available, for each product exposed to view.

C. Certificates from manufacturers of joint sealers attesting that their products comply with specification requirements and are suitable for the use indicated.

D. Qualification data complying with requirements specified in "Quality Assurance" article. Include list of completed projects with project name, addresses, names of Architects and Owners, plus other information specified.

E. Compatibility and adhesion test reports from manufacturer indicating materials forming joint substrates and joint sealant backings have been tested for compatibility and adhesion with

Attachment: Exhibit B - Fire Station #96 Project Manual (2023-R-55 : Fire Station Construction)

sealants. Include manufacturer's interpretation of test results relative to sealant performance and recommendations for primers and substrate preparation needed to obtain adhesion.

F. Product test reports for each type of joint sealers indicated, evidencing compliance with requirements specified.

G. Preconstruction field test reports indicating which products and joint preparation methods demonstrated acceptable adhesion to joint substrates.

1.06 QUALITY ASSURANCE:

A. Installer Qualifications: Engage an Installer who has successfully completed within the last 5 years at least 5 joint sealer applications similar in type and size to that of this Project and who will assign mechanics from these earlier applications to this project, of which one will serve as lead mechanic.

B. Single Source Responsibility for Joint Sealer Materials: Obtain joint sealer materials from a single manufacturer for each different product required.

C. Preconstruction Compatibility and Adhesion Testing: Submit samples of all materials that will contact or affect joint sealers to joint sealer manufacturers for compatibility and adhesion testing, as indicated below:

D. Use test methods standard with manufacturer to determine if priming and other specific joint preparation techniques are required to obtain rapid, optimum adhesion of joint sealers to joint substrates.

E. Perform tests under normal environmental conditions expected during actual installation

F. Testing will not be required when joint sealer manufacturer is able to submit joint preparation data required above which is acceptable to Architect and is based on previous testing of current sealant products for adhesion to, and compatibility with, joint substrates and other materials matching those submitted.

G. Arrange for tests to take place with both Architect and joint sealer manufacturer's technical representative present.

1.07 DELIVERY, STORAGE, AND HANDLING:

A. Deliver materials to Project site in original unopened containers or bundles with labels informing about manufacturer, product name and designation, color, expiration period for use, pot life, curing time, and mixing instructions for multicomponent materials.

B. Store and handle materials in compliance with manufacturers' recommendations to prevent their deterioration or damage due to moisture, high or low temperatures, contaminants, or other causes.

1.08 PROJECT CONDITIONS:

A. Environmental Conditions: Do not proceed with installation of joint sealers under the following conditions:

1. When ambient and substrate temperature conditions are outside the limits permitted by joint sealer manufacturers.
2. When joint substrates are wet due to rain, frost, condensation, or other causes.
3. Joint Width Conditions: Do not proceed with installation of joint sealers where joint widths are less than allowed by joint sealer manufacturer for application indicated.
4. Joint Substrate Conditions: Do not proceed with installation of joint sealers until contaminants capable of interfering with their adhesion are removed from joint substrates.

PART 2 - PRODUCTS

2.01 MATERIALS, GENERAL:

A. Compatibility: Provide joint sealers, joint fillers and other related materials that are compatible with one another and with joint substrates under conditions of service and application, as demonstrated by sealant manufacturer based on testing and field experience.

Attachment: Exhibit B - Fire Station #96 Project Manual (2023-R-55 : Fire Station Construction)

B. Colors: Provide color of exposed joint sealers indicated or, if not otherwise indicated, as selected by Architect from manufacturer's standard and custom colors.

2.02 ELASTOMERIC JOINT SEALANTS:

A. Elastomeric Sealant Standard: Provide elastomeric sealant of base polymer indicated, complying with ASTM C 920 requirements including reference to Type, Grade, Class, and Uses.

B. Urethane Sealants for use in vertical joints within or between masonry and concrete:
   1. Type M: Grade NS, Class 25, Use NT, M, A, and O

C. Products: Subject to compliance with requirements, provide one of the following:
   1. Tremco “Dymeric 511”
   2. Pecora Corp. "Dynatrol II"

2.03 URETHANE SEALANTS FOR USE IN HORIZONTAL TRAFFIC JOINTS IN CONCRETE SLABS:

A. Type M or Type S: Grade P, Class 25, Use T, M, and O

B. Products: Subject to compliance with requirements, provide one of the following:
   1. Type M: Pecora Corp. "Urexpan" NR-201
   2. Type S:Tremco “THC-900” / “901” (>5% slope)

2.04 SILICONE SEALANTS FOR USE IN VERTICAL JOINTS OTHER THAN WITHIN OR BETWEEN MASONRY AND CONCRETE):

A. Type S: Grade NS, Class 25, Use NT, M, A, and O

B. Products: Subject to compliance with requirements, provide one of the following:
   1. Tremco “Spectrem 1”
   2. Dow-Corning “795 Silicone Building Sealant”

2.05 LATEX JOINT SEALANTS:

A. Acrylic-Emulsion Sealant: Manufacturer's standard, one part, nonsag, mildew-resistant, acrylic-emulsion sealant complying with ASTM C 834, formulated to be paintable and recommended for exposed applications on interior and on protected exterior locations involving joint movement of not more than plus or minus 7.5 percent.

B. Products: Subject to compliance with requirements, provide one of the following:
   1. "AC-20"; Pecora Corp.
   2. "Tremco Acrylic Latex Caulk"; Tremco Inc.

2.06 FIRE-RESISTANT JOINT SEALERS:

A. General: Provide manufacturer's standard fire-stopping sealant, with accessory materials, having fire-resistance ratings indicated as established by testing identical assemblies per ASTM E 814 by Underwriters Laboratory, Inc. or other testing and inspecting agency acceptable to authorities having jurisdiction.

B. Foamed-In-Place-Fire-Stopping Sealant: Two-part, foamed-in-place, silicone sealant formulated for use in a through-penetration fire-stop system for filling openings around cables, conduit, pipes and similar penetrations through rated wall assemblies.

C. Products: Subject to compliance with requirements, provide one of the following:
   1. Two-Part Fire-Stopping Sealant:
      a. Dow Corning Fire Stop Sealant"; Dow Corning Corp.
   2. "Insta-FireSeal Silicone RTV Foam"; Insta-Foam Products, Inc.

2.07 JOINT SEALANT BACKING:

A. General: Provide sealant backings of material and type which are nonstaining; are compatible with joint substrates, sealants, primers and other joint fillers; and are approved for applications indicated by sealant manufacturer based on field experience and laboratory testing.

B. Plastic Foam Joint Fillers: Preformed, compressible, resilient, nonwaxing, nonextruding strips of flexible, nongassing plastic foam of material indicated below; nonabsorbent to water and gas;

Attachment: Exhibit B - Fire Station #96 Project Manual (2023-R-55 : Fire Station Construction)

and of size, shape and density to control sealant depth and otherwise contribute to producing optimum sealant performance.

C. Either open-cell polyurethane foam or closed-cell polyethylene foam, unless otherwise indicated, subject to approval of sealant manufacturer, for cold-applied sealants only.

D. Bond-Breaker Tape: Polyethylene tape or other plastic tape as recommended by sealant manufacturer for preventing sealant from adhering to rigid, inflexible joint filler materials or joint surfaces at back of joint where such adhesion would result in sealant failure. Provide self-adhesive tape where applicable.

2.08 MISCELLANEOUS MATERIALS:

A. Primer: Provide type recommended by joint sealer manufacturer where required for adhesion of sealant to joint substrates indicated, as determined from preconstruction joint sealer-substrate tests and field tests.

B. Cleaners for Nonporous Surfaces: Provide nonstaining, chemical cleaners of type which are acceptable to manufacturers of sealants and sealant backing materials, which are not harmful to substrates and adjacent nonporous materials, and which do not leave oily residues or otherwise have a detrimental effect on sealant adhesion or in-service performance.

C. Masking Tape: Provide nonstaining, nonabsorbent type compatible with joint sealants and to surfaces adjacent to joints.

D. Accessory Materials for Fire-Stopping Sealants: Provide forming, joint fillers, packing and other accessory materials required for installation of fire-stopping sealants as applicable to installation conditions indicated.

PART 3 - EXECUTION

3.01 EXAMINATION:

A. Examine joints indicated to receive joint sealers, with Installer present, for compliance with requirements for joint configuration, installation tolerances and other conditions affecting joint sealer performance. Do not proceed with installation of joint sealers until unsatisfactory conditions have been corrected.

3.02 PREPARATION:

A. Surface Cleaning of Joints: Clean out joints immediately before installing joint sealers to comply with recommendations of joint sealer manufacturers and the following requirements:

B. Remove all foreign material from joint substrates which could interfere with adhesion of joint sealer, including dust; paints, except for permanent, protective coatings tested and approved for sealant adhesion and compatibility by sealant manufacturer; old joint sealers; oil; grease; waterproofing; water repellents; water; surface dirt; and frost.

C. Clean concrete, masonry, unglazed surfaces of ceramic tile and similar porous joint substrate surfaces, by brushing, grinding, blast cleaning, mechanical abrading, or a combination of these methods to produce a clean, sound substrate capable of developing optimum bond with joint sealers. Remove loose particles remaining from above cleaning operations by vacuuming or blowing out joints with oil-free compressed air.

D. Remove laitance and form release agents from concrete.

E. Clean metal, glass, porcelain enamel, glazed surfaces of ceramic tile; and other nonporous surfaces by chemical cleaners or other means which are not harmful to substrates or leave residues capable of interfering with adhesion of joint sealers.

F. Joint Priming: Prime joint substrates where indicated or where recommended by joint sealer manufacturer based on preconstruction joint sealer-substrate tests or prior experience. Apply primer to comply with joint sealer manufacturer's recommendations. Confine primers to areas of joint sealer bond, do not allow spillage or migration onto adjoining surfaces.

G. Masking Tape: Use masking tape where required to prevent contact of sealant with adjoining surfaces which otherwise would be permanently stained or damaged by such contact or by

Attachment: Exhibit B - Fire Station #96 Project Manual (2023-R-55 : Fire Station Construction)

cleaning methods required to remove sealant smears. Remove tape immediately after tooling without disturbing joint seal.

3.03 INSTALLATION OF JOINT SEALERS:

A. General: Comply with joint sealer manufacturers' printed installation instructions applicable to products and applications indicated, except where more stringent requirements apply.

B. Elastomeric Sealant Installation Standard: Comply with recommendations of ASTM C 962 for use of joint sealants as applicable to materials, applications and conditions indicated.

C. Latex Sealant Installation Standard: Comply with requirements of ASTM C 790 for use of latex sealants.

D. Installation of Foamed-In-Place Sealant: Install sealant, including forming, packing and other accessory materials to fill openings between unit masonry walls and steel roof deck assemblies. Comply with manufacturer's installation requirements and any requirements established by testing and inspecting agency.

E. Installation of Sealant Backings: Install sealant backings to comply with the following requirements:

F. Install joint fillers of type indicated to provide support of sealants during application and at position required to produce the cross-sectional shapes and depths of installed sealants relative to joint widths which allow optimum sealant movement capability.

1. Do not leave gaps between ends of joint fillers.
2. Do not stretch, twist, puncture, or tear joint fillers.
3. Remove absorbent joint fillers which have become wet prior to sealant application and replace with dry material.

G. Install bond breaker tape between sealants and joint fillers, compression seals, or back of joints where adhesion of sealant to surfaces at back of joints would result in sealant failure.

H. Install compressible seals serving as sealant backings to comply with requirements indicated above for joint fillers.

I. Installation of Sealants: Install sealants by proven techniques that result in sealants directly contacting and fully wetting joint substrates, completely filling recesses provided for each joint configuration, and providing uniform, cross-sectional shapes and depths relative to joint widths which allow optimum sealant movement capability.

J. Tooling of Nonsag Sealants: Immediately after sealant application and prior to time skinning or curing begins, tool sealants to form smooth, uniform beads of configuration indicated, to eliminate air pockets, and to ensure contact and adhesion of sealant with sides of joint. Remove excess sealants from surfaces adjacent to joint. Do not use tooling agents which discolor sealants or adjacent surfaces or are not approved by sealant manufacturer.

K. Provide concave joint configuration per Figure 6A in ASTM C 962, unless otherwise indicated.

3.04 CLEANING:

A. Clean off excess sealants or sealant smears adjacent to joints as work progresses by methods and with cleaning materials approved by manufacturers of joint sealers and of products in which joints occur.

3.05 PROTECTION:

A. Protect joint sealers during and after curing period from contact with contaminating substances or from damage resulting from construction operations or other causes so that they are without deterioration or damage at time of Substantial Completion. If, despite such protection, damage or deterioration occurs, cut out and remove damaged or deteriorated joint sealers immediately and reseal joints with new materials to produce joint sealer installations with repaired areas indistinguishable from original work.

END OF SECTION

Attachment: Exhibit B - Fire Station #96 Project Manual (2023-R-55 : Fire Station Construction)

SECTION 081113
HOLLOW METAL DOORS AND FRAMES

PART 1 GENERAL

1.01 SECTION INCLUDES

A. Non-fire-rated hollow metal doors and frames.

B. Fire-rated hollow metal doors and frames.

C. Hollow metal frames for wood doors.

1.02 RELATED REQUIREMENTS

A. Section 081406 - Flush Wood Doors.

B. Section 087100 - Finish Hardware.

C. Section 099000 - Painting

1.03 REFERENCE STANDARDS

A. ANSI/SDI A250.8 - Specifications for Standard Steel Doors and Frames (SDI-100); 2014.

B. ANSI/SDI A250.10 - Test Procedure and Acceptance Criteria for Prime Painted Steel Surfaces for Steel Doors and Frames; 2011.

C. ASTM A653/A653M - Standard Specification for Steel Sheet, Zinc-Coated (Galvanized) or Zinc-Iron Alloy-Coated (Galvannealed) by the Hot-Dip Process; 2015.

D. ASTM A1008/A1008M - Standard Specification for Steel, Sheet, Cold-Rolled, Carbon, Structural, High-Strength Low-Alloy, High-Strength Low-Alloy with Improved Formability, Solution Hardened, and Bake Hardenable; 2015.

E. ASTM A1011/A1011M - Standard Specification for Steel, Sheet and Strip, Hot-Rolled, Carbon, Structural, High-Strength Low-Alloy, High-Strength Low-Alloy with Improved Formability, and Ultra-High Strength; 2014.

F. BHMA A156.115 - American National Standard for Hardware Preparation in Steel Doors and Steel Frames; 2014.

G. NAAMM HMMA 840 - Guide Specifications for Installation and Storage of Hollow Metal Doors and Frames; 2007.

1.04 SUBMITTALS

A. See Section 013000 - Submittals for submittal procedures.

B. Product Data: Materials and details of design and construction, hardware locations, reinforcement type and locations, anchorage and fastening methods, and finishes.

C. Shop Drawings: Details of each opening, showing elevations, glazing, frame profiles, and identifying location of different finishes, if any.

D. Manufacturer's Certificate: Certification that products meet or exceed specified requirements.

E. Provide Florida Product Approval Number for door and frame assembly.

1.05 QUALITY ASSURANCE

A. Manufacturer Qualifications: Company specializing in manufacturing the products specified in this section with minimum three years documented experience.

B. Maintain at the project site a copy of all reference standards dealing with installation.

1.06 DELIVERY, STORAGE, AND HANDLING

A. Store in accordance with NAAMM HMMA 840.

B. Protect with resilient packaging; avoid humidity build-up under coverings; prevent corrosion.

Attachment: Exhibit B - Fire Station #96 Project Manual (2023-R-55 : Fire Station Construction)

PART 2 PRODUCTS

2.01 MANUFACTURERS

A. Steel Frames and Doors:
   1. Assa Abloy Ceco, Curries, or Fleming: www.assaabloydss.com/#sle.
   2. Ceco Door Products: www.cecodoor.com.
   3. Windsor Republic Doors: www.republicdoor.com.
   4. Steelcraft: www.steelcraft.com.
   5. Substitutions: See Section 016000 - Product Requirements.

2.02 FRAMES

A. Requirements for All Doors and Frames:
   1. Steel used for fabrication of doors and frames shall comply with one or more of the following requirements; Galvannealed steel conforming to ASTM A653/A653M, cold-rolled steel conforming to ASTM A1008/A1008M, or hot-rolled pickled and oiled (HRPO) steel conforming to ASTM A1011/A1011M, Commercial Steel (CS) Type B for each.
   2. Accessibility: Comply with ANSI/ICC A117.1.
   3. Door Top Closures: Flush with top of faces and edges.
   4. Door Edge Profile: Beveled on both edges.
   5. Door Texture: Smooth faces.
   6. Glazed Lights: Non-removable stops on non-secure side; sizes and configurations as indicated on drawings.
   7. Hardware Preparation: In accordance with DHI A115 Series, with reinforcement welded in place, in addition to other requirements specified in door grade standard. Refer to door hardware schedule for exact hardware to be installed at each door.
      a. At existing frames that are scheduled to receive new doors, fabricator shall field verify existing hardware locations at frame and adapt new doors to existing hardware locations.
   8. Galvanizing for Units in wet or exterior locations or unconditioned or partly-conditioned spaces: All components hot-dipped zinc-iron alloy-coated (galvannealed), manufacturer's standard coating thickness.
   9. Finish: Factory primed, for field finishing.

B. Combined Requirements: If a particular door and frame unit is indicated to comply with more than one type of requirement, comply with the specified requirements for each type; for instance, an exterior door that is also indicated as being sound-rated must comply with the requirements specified for exterior doors and for sound-rated doors; where two requirements conflict, comply with the most stringent.

2.03 STEEL DOORS

A. Exterior Doors :
   1. Grade: ANSI A250.8 Level 3, physical performance Level A, Model 2, seamless.
   2. Core: Polystyrene foam.
   3. Weatherstripping: Separate, see Section 087100.

B. Interior Doors, Non-Fire-Rated:
   1. Grade: ANSI A250.8 Level 2, physical performance Level B, Model 2, seamless.
   2. Core: Cardboard honeycomb.
   3. Thickness: 1-3/4 inches.

2.04 STEEL FRAMES

A. General:
   1. Comply with the requirements of grade specified for corresponding door, except:
      a. ANSI A250.8 Level 2 Doors: 16 gage frames.
      b. ANSI A250.8 Level 3 Doors: 14 gage frames.
      c. Frames for Wood Doors: Comply with frame requirements indicated on frame types drawing and in opening schedule.

Attachment: Exhibit B - Fire Station #96 Project Manual (2023-R-55 : Fire Station Construction)

B. All Door Frames: Fully welded.
   1. Galvanizing: All components hot-dipped zinc-iron alloy-coated (galvannealed) in accordance with ASTM A653/A653M, with manufacturer's standard coating thickness.
   2. Weatherstripping: Separate, see Section 087100.

C. Interior Door Frames, Non-Fire-Rated: Fully welded type.
   1. Galvanizing: All components hot-dipped zinc-iron alloy-coated (galvannealed) in accordance with ASTM A 653/A 653M, with manufacturer's standard coating thickness

2.05 FINISH MATERIALS

A. Primer: Rust-inhibiting, complying with ANSI A250.10, door manufacturer's standard.

B. Bituminous Coating: Asphalt emulsion or other high-build, water-resistant, resilient coating.

PART 3 EXECUTION

3.01 EXAMINATION

A. Verify existing conditions before starting work.

B. Verify that opening sizes and tolerances are acceptable.

C. Verify that finished walls are in plane to ensure proper door alignment.

3.02 PREPARATION

A. Coat inside of frames to be installed in masonry or to be grouted, with bituminous coating, prior to installation.

3.03 INSTALLATION

A. Install in accordance with the requirements of the specified door grade standard and NAAMM HMMA 840.

B. Coordinate frame anchor placement with wall construction.

C. Coordinate installation of hardware.

D. Touch up damaged factory finishes.

3.04 TOLERANCES

A. Clearances Between Door and Frame: As specified in ANSI A250.8.

B. Maximum Diagonal Distortion: 1/16 in measured with straight edge, corner to corner.

3.05 ADJUSTING

A. Adjust for smooth and balanced door movement.

END OF SECTION

Attachment: Exhibit B - Fire Station #96 Project Manual (2023-R-55 : Fire Station Construction)

SECTION 081416
FLUSH WOOD DOORS

PART 1 GENERAL

1.01 SECTION INCLUDES

A. Flush wood doors; flush configuration; non-rated.

1.02 REFERENCE STANDARDS

A. ASTM C1048 - Standard Specification for Heat-Strengthened and Fully Tempered Flat Glass; 2012.

B. ASTM C1172 - Standard Specification for Laminated Architectural Flat Glass; 2014.

C. AWI/AWMAC (QSI) - Architectural Woodwork Quality Standards Illustrated; Architectural Woodwork Institute and Architectural Woodwork Manufacturers Association of Canada; 2005, 8th Ed., Version 2.0.

D. NFPA 80 - Standard for Fire Doors and Other Opening Protectives; 2016.

E. UBC Std 7-2, Part II - Test Standard for Smoke- and Draft-control Assemblies; International Conference of Building Officials; 1997.

1.03 SUBMITTALS

A. See Section 010100 for submittal procedures.

B. Product Data: Indicate door core materials and construction; veneer species, type and characteristics.

C. Specimen warranty.

D. Shop Drawings: Illustrate door opening criteria, elevations, sizes, types, swings, undercuts required, special beveling, special blocking for hardware, factory machining criteria, factory finishing criteria, identify cutouts for glazing.

E. Samples: Submit two samples of door veneer, 8 x 10 inch in size illustrating wood grain, stain color, and sheen.

F. Manufacturer's Installation Instructions: Indicate special installation instructions.

G. Warranty, executed in City of Holly Hill's name.

1.04 QUALITY ASSURANCE

A. Maintain one copy of the specified door quality standard on site for review during installation and finishing.

B. Manufacturer Qualifications: Company specializing in manufacturing the products specified in this section with minimum three years of documented experience.

C. Installed Fire Rated Door Assembly: Conform to NFPA 80 for fire rated class as scheduled.

D. Smoke and Draft Control Doors : In addition to required fire rating, comply with air leakage requirements of UBC Std 7-2, Part II; with "S" label; if necessary, provide additional gasketing or edge sealing.

1.05 DELIVERY, STORAGE, AND HANDLING

A. Package, deliver and store doors in accordance with specified quality standard.

B. Accept doors on site in manufacturer's packaging. Inspect for damage.

C. Protect doors with resilient packaging sealed with heat shrunk plastic. Do not store in damp or wet areas; or in areas where sunlight might bleach veneer. Seal top and bottom edges of doors immediately. Break seal on site to permit ventilation.

1.06 PROJECT CONDITIONS

A. Coordinate the work with door opening construction, door frame and door hardware installation.

Attachment: Exhibit B - Fire Station #96 Project Manual (2023-R-55 : Fire Station Construction)

1.07 WARRANTY

A. Refer to applicable Division 1 specifications sections for any additional warranty requirements and for required warranty submittals at project closeout.

B. Interior Doors: Provide manufacturer's warranty for the life of the installation.

C. Provide warranty for the following term:
   1. Interior Doors: Life of installation.

D. Include coverage for delamination of veneer, warping beyond specified installation tolerances, defective materials, and telegraphing core construction.

PART 2 PRODUCTS

2.01 MANUFACTURERS

A. Wood Veneer Faced Doors:
   1. Algoma Hardwoods, Inc.: www.algomahardwoods.com
   2. Graham Wood Doors: www.grahamdoors.com.
   3. Eggers Industries: www.eggersindustries.com/#sle.
   4. Haley Brothers: www.haleybros.com/#sle.
   5. Marshfield DoorSystems, Inc: www.marshfielddoors.com/#sle.
   6. Substitutions: See Section 016000 - Product Requirements.

2.02 DOORS

A. All Doors: See drawings for locations and additional requirements.
   1. Quality Level: Custom Grade, in accordance with AWI/AWMAC Architectural Woodwork Quality Standards Illustrated, Section 1300.
   2. Wood Veneer Faced Doors: 7-ply unless otherwise indicated.

B. Interior Doors: 1-3/4 inches thick unless otherwise indicated; flush construction.
   1. Provide solid core doors at all locations .
   2. Wood veneer facing with factory transparent finish .

2.03 DOOR CORES

A. Non-Rated Solid Core and 20 Minute Rated Doors: Type particleboard core (PC), plies and faces as indicated above.

2.04 DOOR FACINGS

A. Wood Veneer Facing for Transparent Finish: to match existing red oak, veneer grade as specified by quality standard, quarter sliced, book veneer match, running assembly match; unless otherwise indicated.
   1. Vertical Edges: Same species as face veneer.
   2. Pairs: Pair match each pair; set match pairs within 10 feet of each other when doors are closed.

B. Facing Adhesive: Type II - water resistant.

2.05 ACCESSORIES

A. Glazed Openings:
   1. Heat-Strengthened and Fully Tempered Glass: ASTM C1048.
   2. Laminated Glass: Float glass laminated in accordance with ASTM C1172.
   3. Tint: Clear.
   4. Coating: Low-E type, on #2 surface.

B. Door Hardware: As specified in Section 087100.

2.06 DOOR CONSTRUCTION

A. Fabricate doors in accordance with door quality standard specified.

B. Cores Constructed with Stiles and Rails:

C. Provide solid blocks at lock edge for hardware reinforcement.

Attachment: Exhibit B - Fire Station #96 Project Manual (2023-R-55 : Fire Station Construction)

1. Provide solid blocking for other throughbolted hardware.

D. Fit door edge trim to edge of stiles after applying veneer facing.

E. Vertical Exposed Edge of Stiles - Veneer Faces: Of same species as veneer facing.

F. Fit door edge trim to edge of stiles after applying veneer facing.

G. Factory machine doors for hardware other than surface-mounted hardware, in accordance with hardware requirements and dimensions.
   1. At existing frames that are scheduled to receive new doors, fabricator shall field verify existing hardware locations at frame and adapt new doors to existing hardware locations.

H. Factory machine openings as scheduled for glazing as indicated on Door Types drawing.

I. Factory fit doors for frame opening dimensions identified on shop drawings, with edge clearances in accordance with specified quality standard.
   1. Exception: Doors to be field finished.

J. Provide edge clearances in accordance with AWI Quality Standards Illustrated Section 1700.

K. Provide edge clearances in accordance with AWI Quality Standards Illustrated Section 1700.

2.07 FACTORY FINISHING - WOOD VENEER DOORS

A. Factory finish doors in accordance with specified quality standard:
   1. Transparent Finish: Transparent conversion varnish, Premium quality, satin sheen.

PART 3 EXECUTION

3.01 EXAMINATION

A. Verify existing conditions before starting work.

B. Verify that opening sizes and tolerances are acceptable.

C. Do not install doors in frame openings that are not plumb or are out-of-tolerance for size or alignment.

3.02 INSTALLATION

A. Install doors in accordance with manufacturer's instructions and specified quality standard.

B. Factory-Finished Doors: Do not field cut or trim; if fit or clearance is not correct, replace door.

C. Trim door height by cutting bottom edges to a maximum of 3/4 inch (19 mm).

D. Use machine tools to cut or drill for hardware.

E. Coordinate installation of doors with installation of frames and hardware.

3.03 TOLERANCES

A. Conform to specified quality standard for fit and clearance tolerances.

B. Conform to specified quality standard for maximum diagonal distortion.

3.04 ADJUSTING

A. Adjust doors for smooth and balanced door movement.

B. Adjust closers for full closure and opening force maximum limits prescribed by code and ADA..

END OF SECTION

Attachment: Exhibit B - Fire Station #96 Project Manual (2023-R-55 : Fire Station Construction)

SECTION 083323
OVERHEAD COILING DOORS

PART 1 GENERAL

1.01 SECTION INCLUDES

A. Exterior coiling doors.

B. Electric operators and control stations.

C. Radio-frequency remote door receivers and controllers.

D. Wiring from electric circuit disconnect to operators to control stations.

1.02 RELATED REQUIREMENTS

A. Section 06100 - Rough Carpentry.

B. Section 087100 - Door Hardware: Cylinder cores and keys.

1.03 REFERENCE STANDARDS

A. ASTM A36/A36M - Standard Specification for Carbon Structural Steel; 2014.

B. ASTM A123/A123M - Standard Specification for Zinc (Hot-Dip Galvanized) Coatings on Iron and Steel Products; 2015.

C. ASTM A653/A653M - Standard Specification for Steel Sheet, Zinc-Coated (Galvanized) or Zinc-Iron Alloy-Coated (Galvannealed) by the Hot-Dip Process; 2015.

D. ASTM A666 - Standard Specification for Annealed or Cold-Worked Austenitic Stainless Steel Sheet, Strip, Plate, and Flat Bar; 2015.

E. ASTM B221 - Standard Specification for Aluminum and Aluminum-Alloy Extruded Bars, Rods, Wire, Profiles, and Tubes; 2014.

F. ASTM B221M - Standard Specification for Aluminum and Aluminum-Alloy Extruded Bars, Rods, Wire, Profiles, and Tubes [Metric]; 2013.

G. NEMA 250 - Enclosures for Electrical Equipment (1000 Volts Maximum); 2014.

H. NEMA ICS 2 - Industrial Control and Systems Controllers, Contactors and Overload Relays Rated 600 Volts; 2000 (R2005), with errata, 2008.

I. NEMA MG 1 - Motors and Generators; 2014.

1.04 SUBMITTALS

A. See Section 013000 - Submittals, for submittal procedures.

B. Product Data: Provide general construction, component connections and details, electrical equipment, manual control stations.

C. Shop Drawings: Indicate pertinent dimensioning, anchorage methods, hardware locations, and installation details.

D. Warranty: Submit manufacturer warranty and ensure that forms have been completed in Owner's name and registered with manufacturer.

E. Manufacturer's Instructions: Indicate installation sequence and procedures, adjustment and alignment procedures.

F. Maintenance Data: Indicate lubrication requirements and frequency and periodic adjustments required.

1.05 QUALITY ASSURANCE

A. Products Requiring Electrical Connection: Listed and classified by testing firm acceptable to the authority having jurisdiction as suitable for the purpose specified and indicated.

1.06 WARRANTY

A. See Section 017800 - Closeout Submittals, for additional warranty requirements.

Attachment: Exhibit B - Fire Station #96 Project Manual (2023-R-55 : Fire Station Construction)

1.07 PERFORMANCE REQUIREMENTS

A. Provide doors certified to withstand a wind-load pressure determined in accordance with FBC Chapter 16, Ultimate Wind Speed 152 mph (3 second gust), Nominal Wind Speed 118 mph, Risk Category IV, Wind Exposure C, Enclosure Classification - Partially Enclosed. Refer to structural drawings for more information.

1.08 WARRANTY

A. Provide three year/20,000 cycle warranty on doord and operating systems.

PART 2 PRODUCTS

2.01 MANUFACTURERS

A. Overhead Coiling Doors:
   1. Overhead Door Corporation, 620 Series Heavy Duty Stormtite Rolling Service Doors: www.overheaddoor.com. (Basis of Design)
   2. Cornell Iron Works, Inc: www.cornelliron.com/#sle.
   3. Clopay Building Products Company, Inc: www.clopaycommercial.com.
   4. The Cookson Company: www.cooksondoor.com/#sle.
   5. _____; Product ____.

2.02 COILING DOORS

A. Exterior Coiling Doors: Steel slat curtain.
   1. Flat profile type F-265 slats.
   2. Nominal Slat Size: 2 5/8" inches wide x required length.
   3. Finish: Factory painted Powder Coat, color as selected.
   4. Guides: Angles; galvanized steel.
   5. Electric operation. With manual hand chain lift override operation.
   6. Mounting: Surface mounted.
   7. High Wind Load Option
   8. 20,000 Cycles

2.03 MATERIALS

A. Curtain Construction: Interlocking slats.
   1. Slat Ends: Alternate slats fitted with end locks to act as wearing surface in guides and to prevent lateral movement.
   2. Curtain Bottom: Fitted with angles to provide reinforcement and positive contact in closed position.
   3. Weatherstripping: Moisture and rot proof, resilient type, located at jamb edges, bottom of curtain, and where curtain enters hood enclosure of exterior doors.

B. Steel Slats: Minimum minimum 20 gage ASTM A 653/A 653M galvanized steel sheet.
   1. Galvanizing: Minimum G90/Z275 coating.

C. Guide Construction: Continuous, of profile to retain door in place with snap-on trim, mounting brackets of same metal.

D. Steel Guides: ASTM A 36/A 36M steel angles, size as required for wind loading, hot-dip galvanized per ASTM A 123/A 123M. Prime paint.

E. Hood Enclosure: Internally reinforced to maintain rigidity and shape.
   1. Prime paint.

F. Hardware:
   1. Latching: Inside mounted, adjustable keeper, spring activated latch bar with feature to keep in locked or retracted position.
   2. Latch Handle: Interior handle.

G. Roller Shaft Counterbalance: Steel pipe and helical steel spring system, capable of producing torque sufficient to ensure smooth operation of curtain from any position and capable of holding position at mid-travel; with adjustable spring tension; requiring 25 lb nominal force to operate.

Attachment: Exhibit B - Fire Station #96 Project Manual (2023-R-55 : Fire Station Construction)

2.04 ELECTRIC OPERATION

A. Operator, Controls, Actuators, and Safeties: Comply with UL 325; provide products listed by a testing agency acceptable to authorities having jurisdiction.
   1. Provide interlock switches on motor operated units.
   2. Provide tamperproof operation cycle counter.

B. Electric Operators:
   1. RHX Heavy Duty Commercial Operators
   2. Mounting: Side mounted
   3. Motor Voltage: 120 volt, single phase, 60 Hz.
   4. Brake: Adjustable friction clutch type, activated by motor controller.
   5. Manual override in case of power failure.
   6. Radio frequency remote operation function.

C. Control Station: Standard three button (OPEN-STOP-CLOSE) momentary control for each operator.

PART 3 EXECUTION

3.01 EXAMINATION

A. Verify that opening sizes, tolerances and conditions are acceptable.

3.02 COORDINATION

A. Examine drawings to ensure adquate support will be present for product installation.

B. Notify Contractor of requirements for interior wall framing that will support coiling shutters and doors.

C. Contract Sum shall include costs associated with support for products covered by this specification section.

D. Contractor to coordinate with the Owner's access control vendor for future connection of the access control system to overhead door controllers and operators.

3.03 INSTALLATION

A. Install units in accordance with manufacturer's instructions.

B. Use anchorage devices to securely fasten assembly to wall construction and building framing without distortion or stress.

C. Securely and rigidly brace components suspended from structure. Secure guides to structural members only.

D. Fit and align assembly including hardware; level and plumb, to provide smooth operation.

E. Install perimeter trim, closures, and weatherstripping.

3.04 TOLERANCES

A. Maintain dimensional tolerances and alignment with adjacent work.

B. Maximum Variation From Plumb: 1/16 inch.

C. Maximum Variation From Level: 1/16 inch.

D. Longitudinal or Diagonal Warp: Plus or minus 1/8 inch per 10 ft straight edge.

3.05 ADJUSTING

A. Adjust operating assemblies for smooth and noiseless operation.

3.06 CLEANING

A. Clean installed components.

B. Remove labels and visible markings.

C. Touch-up damaged painted surfaces upon substantial completion.

END OF SECTION

Attachment: Exhibit B - Fire Station #96 Project Manual (2023-R-55 : Fire Station Construction)

Attachment: Exhibit B - Fire Station #96 Project Manual (2023-R-55 : Fire Station Construction)

SECTION 084120
ALUMINUM-FRAMED ENTRANCES

PART 1 GENERAL

1.01 WORK INCLUDED

A. Furnish all necessary materials, labor, and equipment for the complete installation of the aluminum swing doors, door frames, and hardware as shown on the drawings and specified herein.

1.02 SUMMARY

A. Section includes: Aluminum Swing Doors, including:
   1. 1. YKK AP Model 35H Impact Resistant and Blast Mitigating Heavy Duty Swing Doors.

1.03 SYSTEM PERFORMANCE DESCRIPTION

A. Performance Requirements: Aluminum swing doors shall meet all requirements of ASTM E 1886, ASTM E 1996 and South Florida Building Code Protocols TAS 201, TAS 202, and TAS 203 and comply with the following specific
performance requirements indicated.
   1. Air Infiltration (Single Acting Butt Hinges, Continuous Hinges, or Offset Pivots): Air infiltration shall be tested in accordance with ASTM E 283 at static pressure of 1.57 PSF (75 Pa). Infiltration shall not exceed 0.50 CFM/FT² for single door or 1.00 CFM/FT² for pair doors.
   2. Water Infiltration: No uncontrolled water other than condensation on indoor face of any component tested in accordance with ASTM E 331 at a test pressure differential of 10.5 psf (503 Pa). Water test to be performed immediately after design pressure test. Standard 35H Entrances are intended for 1st floor applications.
   3. Structural: Door corner structural strength shall be tested per YKK AP's dual moment test procedure and certified by an independent testing laboratory to ensure corner integrity and weld compliance. Certified test procedures and results are available upon request.
   4. Structural Uniform Load Test:
      a. Doors:
         1) Positive Pressure: 70 PSF - Air and Water Threshold; insulating glazing.
         2) Negative Pressure: 90 PSF
   5. Forced Entry Resistance: Tests performed simultaneously with 300 lb. forces applied to the active door panel within 3" of the locks in the direction that would tend to open the door while 150 lb. forces are applied in both perpendicular directions to the 300 lb. force simultaneously.
   6. Thermal Performance: When tested in accordance with AAMA 1503 and NFRC 102:
      a. Condensation Resistance Factor (CRFf): A minimum of 28.
      b. Thermal Transmittance U Value: 0.77 BTU/HR/FT²/ºF or less.

1.04 SUBMITTALS

A. See Section 010100 for submittal procedures.

B. Product Data: Submit product data for each entrance series specified.

C. Substitutions: Whenever substitute products are to be considered, supporting technical data, samples, and test reports must be submitted ten (10) working days prior to bid date in order to make a valid comparison.

D. Shop Drawings: Submit shop drawings showing layout, profiles, and product components, including anchorage, accessories, and finish colors.

E. Samples: Submit verification samples for colors. Minimum 2½ inch by 3 inch (61mm by 73 mm) samples on actual aluminum substrates indicating full color range expected in installed system.

F. Quality Assurance / Control Submittals:
   1. Test Reports: Submit certified test reports showing compliance with specified performance characteristics and physical properties.

Attachment: Exhibit B - Fire Station #96 Project Manual (2023-R-55 : Fire Station Construction)

2. Installer Qualification Data: Submit installer qualification data.

G. Close-out Submittals:
1. Warranty: Submit executed warranty documents specified herein, endorsed by YKK AP authorized official and installer.
2. Project Record Documents: Submit project record documents, including operation and maintenance data for installed materials in accordance with Division 1 Project Close-out (Project Record Documents) Section.

1.05 QUALITY ASSURANCE

A. Qualifications:
1. Installer Qualifications: Installer experienced (as determined by contractor) to perform work of this section who has specialized in the installation of work similar to that required for this project. If requested by Owner, submit reference list of completed projects.
2. Manufacturer Qualifications: Manufacturer capable of providing field service representation during construction process.

B. Pre-Installation Meetings: Conduct pre-installation meeting to verify project requirements, substrate conditions, manufacturer's installation instructions, and manufacturer's warranty requirements.

1.06 PRODUCT CONDITIONS / SITE CONDITIONS

A. Field Measurements: Verify actual measurements/openings by field measurements before fabrication; show recorded measurements on shop drawings. Coordinate field measurements, fabrication schedule with construction progress to avoid construction delays.

1.07 WARRANTY

A. Project Warranty: Refer to "Conditions of the Contract" for project warranty provisions.

B. Manufacturer's Warranty: Submit, for Owner's acceptance, manufacturer's standard warranty document executed by an authorized company official.
1. Warranty Period: Manufacturer’s one (1) year standard warranty commencing on the substantial date of completion for the project provided that the warranty, in no event, shall start later than six (6) months from the date of shipment by YKK AP America Inc.

PART 2 PRODUCTS

2.01 MANUFACTURERS

A. Acceptable Manufacturers:
1. YKK AP America Inc.
270 Riverside Parkway, Suite A
Austell, GA 30168
Telephone (678)838-6000

B. Impact Resistant and Blast Mitigating Entrances:
1. YKK AP Model 35H Impact Resistant and Blast Mitigating Entrances.
a. 35H Description: 3-7/8" (98.36 mm) Door Stile, 2-3/8" thick.
2. Corner Construction: Fabricate door corners joined by concealed reinforcement secured with screws and sigma deep penetration welding.
3. Glazing: Manufacturer's standard glazing stops with EPDM glazing gaskets to prevent water infiltration at the exterior and structural silicone sealant for wet glazing, EPDM silicone compatible gasket for dry glazing with fixed stops at the interior.
4. Weather-stripping: Manufacturer's standard elastomer type in replaceable rabbets for stiles and rails.
5. Standard Hardware:
a. Roton® 780-226HD continuous hinge(s).
b. Type "A" standard YKK AP push/pull.
c. LCN 4040XP surface mounted closer.
d. Von Duprin® CVR (98 / 99 series) US26D Finish, Provide cylinder dogging

Attachment: Exhibit B - Fire Station #96 Project Manual (2023-R-55 : Fire Station Construction)

2.02 MATERIALS

A. Extrusions: ASTM B 221 (ASTM B 221M), 6063-T5 Aluminum Alloy.

B. Aluminum Sheet:
   1. Anodized Finish: ASTM B 209 (ASTM B 209M), 5005-H14 Aluminum Alloy, 0.050" (1.27 mm) minimum thickness.

2.03 ACCESSORIES

A. Manufacturer's Standard Accessories:
   1. Fasteners: Zinc plated steel concealed fasteners; Hardened aluminum alloys or AISI 300 series less steel exposed fasteners, countersunk, finish to match aluminum color.
   2. Perimeter Sealant: Non-skinning type, AAMA 803.3.
   3. Glazing: Setting blocks, edge blocks, and spacers in accordance with ASTM C 864, shore durometer hardness as recommended by manufacturer. Glazing gaskets in accordance with ASTM C 864.
   4. Glazing Adhesive: Dow Corning® 995 Structural Silicone Sealant.

2.04 FABRICATION

A. Shop Assembly: Fabricate and assemble units with joints only at intersection of aluminum members with uniform hairline joints; rigidly secure, and sealed in accordance with manufacturer's recommendations.

B. Hardware: Drill and cut to template for hardware. Reinforce frames and door stiles to receive hardware in accordance with manufacturer's recommendations.

C. Welding: Conceal welds on aluminum members in accordance with AWS recommendations or methods recommended by manufacturer. Members showing welding bloom or discoloration on finish or material distortion will be rejected.

2.05 FINISHES AND COLORS

A. A. YKK AP America Anodized Plus® Finish:
   1. YB5N - Dark Bronze

B. Anodized Finishing: Prepare aluminum surfaces for specified finish; apply shop finish in accordance with the following:
   1. Anodic Coating: Electrolytic color coating followed by an organic seal applied in accordance with the requirements of AAMA 612-02. Aluminum extrusions shall be produced from quality controlled billets meeting AA-6063-T5.
   2. Exposed Surfaces shall be free of scratches and other serious blemishes.
   3. Extrusions shall be given a caustic etch followed by an anodic oxide treatment and then sealed with an organic coating applied with an electrodeposition process.
   4. The anodized coating shall comply with all of the requirements of AAMA 612-02: Voluntary Specifications, Performance Requirements and Test Procedures for Combined Coatings of Anodic Oxide and Transparent Organic Coatings on Architectural Aluminum. Testing shall demonstrate the ability of the finish to resist damage from mortar, salt spray, and chemicals commonly found on construction sites, and to resist the loss of color and gloss.
   5. Overall coating thickness for finishes shall be a minimum of 0.7 mils.

PART 3 EXECUTION

3.01 MANUFACTURER'S INSTRUCTIONS / RECOMMENDATIONS

A. Compliance: Comply with manufacturer's product data, including product technical bulletins, installation instructions, and product carton instructions. The latest installation instructions for this product are available at www.ykkap.com.

3.02 EXAMINATION

A. Site Verification of Conditions: Verify conditions (which have been previously installed under other sections) are acceptable for product installation in accordance with manufacturer's instructions.

Attachment: Exhibit B - Fire Station #96 Project Manual (2023-R-55 : Fire Station Construction)

1. Verify location of preset anchors, perimeter fasteners, and block-outs are in accordance with shop drawings.

3.03 PREPARATION

A. Adjacent Surfaces Protection: Protect adjacent work areas and finish surfaces from damage during product installation.
   1. 1. Aluminum Surface Protection: Protect aluminum surfaces from contact with lime, mortar, cement, acids, and other harmful contaminants.

3.04 INSTALLATION

A. General: Install manufacturer's system in accordance with shop drawings, and within specified tolerances.

3.05 FIELD QUALITY CONTROL

A. Manufacturer's Field Services: Upon request, provide manufacturer's field service consisting of site visit for inspection of product installation in accordance with manufacturer's instructions.

3.06 ADJUSTING AND CLEANING

A. Adjusting: Adjust swing doors for operation in accordance with manufacturer's recommendations.

B. Cleaning: The General Contractor shall clean installed products in accordance with manufacturer's instructions prior to owner's acceptance, and remove construction debris from project site. Legally dispose of debris.

C. Protection: The General Contractor shall protect the installed product's finish surfaces from damage during construction.

END OF SECTION

Attachment: Exhibit B - Fire Station #96 Project Manual (2023-R-55 : Fire Station Construction)

SECTION 085113
ALUMINUM WINDOWS

PART 1 GENERAL

1.01 SUMMARY

A. Section Includes: Fixed & Operable Aluminum Window Systems:
   1. YKK AP Series YOW 225H Fixed Aluminum Window System.
   2. YKK AP Series YOW 225H Operable Aluminum Window System.

B. Related Sections:
   1. Single Source Requirement: All products listed below shall be by the same manufacturer.
      a. Section 08 41 13 Aluminum-Framed Storefronts.
      b. Section 08 41 20 Aluminum-Framed Entrances.

1.02 SYSTEM PERFORMANCE DESCRIPTION

A. All test unit sizes and configurations shall conform to the minimum sizes in accordance with AAMA/WDMA/CSA 101/I.S.A440-05 with a performance class of AW, performance grade 65 (Operable), 100 (Fixed). Windows shall also meet all requirements of South Florida Building Code Protocols TAS 201, TAS 202, and TAS 203 and comply with the following specific performance requirements indicated.
   1. Air Infiltration: When tested in accordance with ASTM E 283 and TAS 202 at differential static pressure of 6.24 PSF (299 Pa), completed window systems shall have maximum allowable infiltration of 0.30 CFM/FT2 (1.85 m3/h·m2).
   2. Water Infiltration: No uncontrolled water on indoor face of any component when tested in accordance with ASTM E 331 and TAS 202 at a static pressure of 12 PSF (575 Pa) operable, 15 PSF (718 Pa) fixed.
   3. Static Load: There shall be no damage to fasteners, hardware, accessories, or any other damage that would render the window inoperable when tested in accordance with ASTM E 330 and TAS 202 at a differential static pressure as follows:
      a. Operable windows: Large & Small Missile: ±65 psf
      b. Fixed windows:
         1) Large Missile +70/-90 psf
         2) Small Missile ± 100 psf.
   4. Forced Entry Resistance: Windows shall meet all test requirements of AAMA 1302.5 and TAS 202.
   5. Large & Small Missile Impact: Windows shall successfully pass the test requirements of both ASTM E 1886/E 1996 and South Florida Protocols TAS 201.
   6. Cyclic Load: Windows shall successfully pass the test requirements of both ASTM E 1886/E 1996 and South Florida Protocols TAS 203.
   7. Acoustical Performance: When tested in accordance with ASTM E 90 and ASTM E 1332, the Sound Transmission
      a. Class (STC), and Outdoor-Indoor Transmission Class (OITC) shall not be less than 36 STC and 27 OITC.
   8. Life Cycle Testing: When tested in accordance with AAMA 910, there shall be no damage to fasteners, hardware parts, or any other damage that would cause the specimen to be inoperable. Resistance to air leakage and water penetration resistance test results shall not exceen the gateway performance.

B. Note: Performance based on lab testing and will vary by configuration and glass type; contact YKK AP engineering for job specific analysis at higher performance levels.

1.03 SUBMITTALS

A. General: Prepare, review, approve, and submit specified submittals in accordance with “Conditions of the Contract” and Division 1 Submittals Sections. Product data, shop drawings, samples, and similar submittals are defined in “Conditions of the Contract.”

B. Product Data: Submit product data for each type window series specified.

Attachment: Exhibit B - Fire Station #96 Project Manual (2023-R-55 : Fire Station Construction)

C. Substitutions: Whenever substitute products are to be considered , supporting technical data, samples, and test reports must be submitted ten (10) working days prior to bid date in order to make a valid comparison.

D. Shop Drawings: Submit shop drawings showing layout, profiles, and product components, including anchorage, accessories, finish colors and textures.

E. Samples: Submit verification samples for colors on actual aluminum substrates indicating full color range expected in installed system.

F. Quality Assurance / Control Submittals:
   1. Test Reports: Submit certified test reports showing compliance with specified performance characteristics and physical properties.

G. Closeout Submittals:
   1. Warranty: Submit warranty documents specified herein.
   2. Project Record Documents: Submit project record documents for installed materials in accordance with Division 1 Project Closeout (Project Record Documents) Section.

1.04 QUALITY ASSURANCE

A. Qualifications:
   1. Installer Qualifications: Installer experienced (as determined by contractor) to perform work of this section who has specialized in the installation of work similar to that required for this project. If requested by Owner, submit reference list of completed projects.
   2. Manufacturer Qualifications: Manufacturer capable of providing field service representation during construction process.
   3. Pre-Installation Meetings: Conduct pre-installation meeting to verify project requirements, substrate conditions, manufacturer's installation instructions, and manufacturer's warranty requirements.

1.05 PROJECT CONDITIONS / SITE CONDITIONS

A. Field Measurements: Verify actual measurements/openings by field measurements before fabrication; show recorded measurements on shop drawings. Coordinate field measurements, fabrication schedule with construction progress to avoid construction delays.

1.06 WARRANTY

A. Project Warranty: Refer to "Conditions of the Contract" for project warranty provisions.

B. Manufacturer's Warranty: Submit, for Owner's acceptance, manufacturer's standard warranty document executed by an authorized company official.

C. Warranty Period: Manufacturer's one (1) year standard warranty commencing on the substantial date of completion for the project provided that the warranty, in no event, shall start later than six (6) months from the date of shipment by YKK AP America Inc.

PART 2 PRODUCTS

2.01 MANUFACTURERS (ACCEPTABLE MANUFACTURERS/PRODUCTS)

A. Acceptable Manufacturers: YKK AP America Inc.
   1. 270 Riverside Parkway, Suite A
   2. Austell, GA 30168
   3. Telephone: (678) 838-6000; Fax: (404) 838-6001
   4. Operable Window System: YKK AP YOW 225H Aluminum Window System.
   5. Fixed Window System: YKK AP YOW 225H Aluminum Window System
   6. AAMA Designation: AW-65 (Operable), AW-100 (Fixed).
   7. Description: The windows shall be extruded aluminum; 2-1/4" frame depth;
      a. Vents shall be flush with frame and have mitered corner construction; Factory-assembled.

B. Configuration: The windows shall be Fixed, Casement Outswing and Single Hung.

Attachment: Exhibit B - Fire Station #96 Project Manual (2023-R-55 : Fire Station Construction)

1. Glazing:
   a. Large Missile Impact: Exterior glazing tape with silicone cap bead; 9/16" monolithic units; Interior silicone compatible setting blocks & structural silicone sealant; Aluminum interior glazing beads; Factory or bench glazed.

2.02 MATERIALS

A. Extrusions: ASTM B 221 (ASTM B 221M), 6063-T5 and 6063-T6 Aluminum Alloys.

B. Aluminum Sheet:
   1. Anodized Finish: ASTM B 209 (ASTM B 209M), 5005-H14 Aluminum Alloy, 0.050” (1.27 mm) minimumthickness.
   2. Painted Finish: ASTM B 209 (ASTM B 209M), 3003-H14 Aluminum Alloy, 0.080” (1.95 mm) minimum thickness.

2.03 ACCESSORIES

A. Manufacturer’s Standard Accessories:
   1. Hardware: Standard concealed stainless steel 4 bar hinges for casement outswing and projected vents, white bronze cam handles and strikes.
   2. Fasteners: All fasteners to be AISI 300 series (except for self-drilling which are to to be AISI 400 series) stainless steel.
   3. Sealant: Non-skinning type, AAMA 803.3
   4. Glazing: Setting blocks, edge blocks, and spacers in accordance with ASTM C 864, shore durometer hardness as recommended by manufacturer; Glazing gaskets in accordance with ASTM C 864.
   5. Glazing Adhesive: Structural silicone sealant.

2.04 FABRICATION

A. Shop Assembly: Fabricate and assemble units with joints only at intersection of aluminum members with hairline joints; rigidly secure, and sealed in accordance with manufacturer’s recommendations.

B. Fabrication Tolerance:
   1. Material Cuts: Square to 1/32 inch (0.8 mm) off square, over largest dimension; proportionate amount of
      1/32 inch (0.8 mm) on the two dimensions.
   2. Maximum Offset: 1/64 inch (0.4 mm) in alignment between two consecutive members in line, end to end.
   3. Maximum Offset: 1/64 inch (0.4 mm) between framing members at glazing pocket corners.
   4. Joints (Between adjacent members in same assembly): Hairline and square to adjacent member.
   5. Variation (In squaring diagonals for doors and fabricated assemblies): 1/16 inch (1.6 mm).
   6. Flatness (For doors and fabricated assemblies): +/- 1/16 inch (1.8 mm) off neutral plane.

2.05 FINISHES AND COLORS

A. A. YKK AP America Anodized Plus® Finish:
   1. DESCRIPTION
      a. Clear Anodized Plus®

PART 3 EXECUTION

3.01 MANUFACTURER’S INSTRUCTIONS / RECOMMENDATIONS

A. Compliance: Comply with manufacturer’s product data, including product technical bulletins, installation instructions,
   1. and product carton instructions. The latest installation instructions are available at www.ykkap.com.

Attachment: Exhibit B - Fire Station #96 Project Manual (2023-R-55 : Fire Station Construction)

3.02 EXAMINATION

A. Site Verification of Conditions: Verify substrate conditions (which have been previously installed under other sections) are acceptable for product installation in accordance with manufacturer's instructions.

3.03 PREPARATION

A. Adjacent Surfaces Protection: Protect adjacent work areas and finish surfaces from damage during product installation.

3.04 INSTALLATION

A. General: Install manufacturer's system in accordance with shop drawings, and within specified tolerances.
   1. Protect aluminum members in contact with masonry, steel, concrete, or dissimilar materials using nylon pads or bituminous coating.
   2. Shim and brace aluminum system before anchoring to structure.
   3. Verify window system allows water entering system to be collected in gutters and wept to the exterior.
      a. Verify weep holes are open, and metal joints are sealed in accordance with manufacturers installation instructions.
   4. Seal metal to metal window system joints using sealant recommended by system manufacturer.

3.05 FIELD QUALITY CONTROL

A. Manufacturer's Field Services: Upon request, provide manufacturer's field service consisting of site visit for inspection of product installation in accordance with manufacturer's instructions.

B. Field Test: Conduct field test to determine watertightness of window system. Conduct test in accordance with AAMA 502-02 at locations selected by Architect.

3.06 ADJUSTING AND CLEANING

A. Adjusting: Adjust operating items as recommended by manufacturer.

B. Cleaning: The General Contractor shall clean installed products in accordance with manufacturer's instructions prior to Owner's acceptance, and remove construction debris from project site. Legally dispose of debris.

C. Protection: The General Contractor shall protect installed product's finish surfaces from damage during construction.

END OF SECTION

Attachment: Exhibit B - Fire Station #96 Project Manual (2023-R-55 : Fire Station Construction)

SECTION 087100
FINISH HARDWARE

PART 1 - GENERAL

1.01 SUMMARY

A. Section includes:

1. Mechanical and electrified door hardware
2. Electronic access control system components

B. Section excludes:

1. Windows
2. Cabinets (casework), including locks in cabinets
3. Signage
4. Toilet accessories
5. Overhead doors

C. Related Sections:

1. Division 01 Section "Alternates" for alternates affecting this section.
2. Division 06 Section "Rough Carpentry"
3. Division 06 Section "Finish Carpentry"
4. Division 07 Section "Joint Sealants" for sealant requirements applicable to threshold installation specified in this section.
5. Division 08 Sections:
   a. "Metal Doors and Frames"
   b. "Flush Wood Doors"
   c. "Stile and Rail Wood Doors"
   d. "Interior Aluminum Doors and Frames"
   e. "Aluminum-Framed Entrances and Storefronts"
   f. "Stainless Steel Doors and Frames"
   g. "Special Function Doors"
   h. "Entrances"
6. Division 26 "Electrical" sections for connections to electrical power system and for low-voltage wiring.
7. Division 28 "Electronic Safety and Security" sections for coordination with other components of electronic access control system and fire alarm system.

1.02 REFERENCES

A. UL LLC

1. UL 10B - Fire Test of Door Assemblies
2. UL 10C - Positive Pressure Test of Fire Door Assemblies
3. UL 1784 - Air Leakage Tests of Door Assemblies
4. UL 305 - Panic Hardware

B. DHI - Door and Hardware Institute

Attachment: Exhibit B - Fire Station #96 Project Manual (2023-R-55 : Fire Station Construction)

1. Sequence and Format for the Hardware Schedule
2. Recommended Locations for Builders Hardware
3. Keying Systems and Nomenclature
4. Installation Guide for Doors and Hardware

C. NFPA – National Fire Protection Association

1. NFPA 70 – National Electric Code
2. NFPA 80 – 2016 Edition – Standard for Fire Doors and Other Opening Protectives
3. NFPA 101 – Life Safety Code
4. NFPA 105 – Smoke and Draft Control Door Assemblies
5. NFPA 252 – Fire Tests of Door Assemblies

D. ANSI - American National Standards Institute

1. ANSI/BHMA A156.1 - A156.29, and ANSI/BHMA A156.31 - Standards for Hardware and Specialties
2. ANSI/BHMA A156.28 - Recommended Practices for Keying Systems
3. ANSI/WDMA I.S. 1A - Interior Architectural Wood Flush Doors
4. ANSI/SDI A250.8 - Standard Steel Doors and Frames

1.03 SUBMITTALS

A. General:

1. Submit in accordance with Conditions of Contract and Division 01 Submittal Procedures.
2. Prior to forwarding submittal:
   a. Review drawings and Sections from related trades to verify compatibility with specified hardware.
   b. Highlight, encircle, or otherwise specifically identify on submittals: deviations from Contract Documents, issues of incompatibility or other issues which may detrimentally affect the Work.

B. Action Submittals:

1. Product Data: Submit technical product data for each item of door hardware, installation instructions, maintenance of operating parts and finish, and other information necessary to show compliance with requirements.
2. Riser and Wiring Diagrams: After final approval of hardware schedule, submit details of electrified door hardware, indicating:
   a. Wiring Diagrams: For power, signal, and control wiring and including:
      1) Details of interface of electrified door hardware and building safety and security systems.
      2) Schematic diagram of systems that interface with electrified door hardware.
      3) Point-to-point wiring.
      4) Risers.

3. Samples for Verification: If requested by Architect, submit production sample of requested door hardware unit in finish indicated and tagged with full description for coordination with schedule.
   a. Samples will be returned to supplier. Units that are acceptable to Architect may, after final check of operations, be incorporated into Work, within limitations of key coordination requirements.

4. Door Hardware Schedule:

Attachment: Exhibit B - Fire Station #96 Project Manual (2023-R-55 : Fire Station Construction)

a. Submit concurrent with submissions of Product Data, Samples, and Shop Drawings. Coordinate submission of door hardware schedule with scheduling requirements of other work to facilitate fabrication of other work critical in Project construction schedule.
b. Submit under direct supervision of a Door Hardware Institute (DHI) certified Architectural Hardware Consultant (AHC) or Door Hardware Consultant (DHC) with hardware sets in vertical format as illustrated by Sequence of Format for the Hardware Schedule published by DHI.
c. Indicate complete designations of each item required for each opening, include:
    1) Door Index: door number, heading number, and Architect's hardware set number.
    2) Quantity, type, style, function, size, and finish of each hardware item.
    3) Name and manufacturer of each item.
    4) Fastenings and other pertinent information.
    5) Location of each hardware set cross-referenced to indications on Drawings.
    6) Explanation of all abbreviations, symbols, and codes contained in schedule.
    7) Mounting locations for hardware.
    8) Door and frame sizes and materials.
    9) Degree of door swing and handing.
    10) Operational Description of openings with electrified hardware covering egress, ingress (access), and fire/smoke alarm connections.

5. Key Schedule:
    a. After Keying Conference, provide keying schedule that includes levels of keying, explanations of key system's function, key symbols used, and door numbers controlled.
    b. Use ANSI/BHMA A156.28 "Recommended Practices for Keying Systems" as guideline for nomenclature, definitions, and approach for selecting optimal keying system.
    c. Provide 3 copies of keying schedule for review prepared and detailed in accordance with referenced DHI publication. Include schematic keying diagram and index each key to unique door designations.
    d. Index keying schedule by door number, keyset, hardware heading number, cross keying instructions, and special key stamping instructions.
    e. Provide one complete bitting list of key cuts and one key system schematic illustrating system usage and expansion. Forward bitting list, key cuts and key system schematic directly to Owner, by means as directed by Owner.
    f. Prepare key schedule by or under supervision of supplier, detailing Owner's final keying instructions for locks.

C. Informational Submittals:

1. Provide Qualification Data for Supplier, Installer and Architectural Hardware Consultant.
2. Provide Product Data:
    a. Certify that door hardware approved for use on types and sizes of labeled fire-rated doors complies with listed fire-rated door assemblies.
    b. Include warranties for specified door hardware.

3. Florida Building Code; Wind load: Submit certified independent lab test or NOA report on each type of exterior opening. All exterior opening submittals shall include door number, door and frame elevations and all finish hardware as tested as an assembly. These reports are to be forwarded to the building department.

D. Closeout Submittals:

1. Operations and Maintenance Data: Provide in accordance with Division 01 and include:

Attachment: Exhibit B - Fire Station #96 Project Manual (2023-R-55 : Fire Station Construction)

a. Complete information on care, maintenance, and adjustment; data on repair and replacement parts, and information on preservation of finishes.
b. Catalog pages for each product.
c. Final approved hardware schedule edited to reflect conditions as installed.
d. Final keying schedule
e. Copy of warranties including appropriate reference numbers for manufacturers to identify project.
f. As-installed wiring diagrams for each opening connected to power, both low voltage and 110 volts.

E. Inspection and Testing:

1. Submit written reports to the Owner and Authority Having Jurisdiction (AHJ) of the results of functional testing and inspection for:
   a. Fire door assemblies, in compliance with NFPA 80.
   b. Required egress door assemblies, in compliance with NFPA 101.

1.04 QUALITY ASSURANCE

A. Qualifications and Responsibilities:

1. Supplier: Recognized architectural hardware supplier with a minimum of 5 years documented experience supplying both mechanical and electromechanical door hardware similar in quantity, type, and quality to that indicated for this Project. Supplier to be recognized as a factory direct distributor by the manufacturer of the primary materials with a warehousing facility in the Project's vicinity. Supplier to have on staff, a certified Architectural Hardware Consultant (AHC) or Door Hardware Consultant (DHC) available to Owner, Architect, and Contractor, at reasonable times during the Work for consultation.
2. Installer: Qualified tradesperson skilled in the application of commercial grade hardware with experience installing door hardware similar in quantity, type, and quality as indicated for this Project.
3. Architectural Hardware Consultant: Person who is experienced in providing consulting services for door hardware installations that are comparable in material, design, and extent to that indicated for this Project and meets these requirements:
   a. For door hardware: DHI certified AHC or DHC.
   b. Can provide installation and technical data to Architect and other related subcontractors.
   c. Can inspect and verify components are in working order upon completion of installation.
   d. Capable of producing wiring diagram and coordinating installation of electrified hardware with Architect and electrical engineers.

4. Single Source Responsibility: Obtain each type of door hardware from single manufacturer.

B. Certifications:

1. Fire-Rated Door Openings:
   a. Provide door hardware for fire-rated openings that complies with NFPA 80 and requirements of authorities having jurisdiction.

Attachment: Exhibit B - Fire Station #96 Project Manual (2023-R-55 : Fire Station Construction)

b. Provide only items of door hardware that are listed products tested by UL LLC, Intertek Testing Services, or other testing and inspecting organizations acceptable to authorities having jurisdiction for use on types and sizes of doors indicated, based on testing at positive pressure and according to NFPA 252 or UL 10C and in compliance with requirements of fire-rated door and door frame labels.

2. Smoke and Draft Control Door Assemblies:
   a. Provide door hardware that meets requirements of assemblies tested according to UL 1784 and installed in compliance with NFPA 105
   b. Comply with the maximum air leakage of 0.3 cfm/sq. ft. (3 cu. m per minute/sq. m) at tested pressure differential of 0.3-inch wg (75 Pa) of water.

3. Electrified Door Hardware
   a. Listed and labeled as defined in NFPA 70, Article 100, by testing agency acceptable to authorities having jurisdiction.

4. Accessibility Requirements:
   a. Comply with governing accessibility regulations cited in "REFERENCES" article 087100, 1.02.D3 herein for door hardware on doors in an accessible route. This project must comply with all Federal Americans with Disability Act regulations and all Local Accessibility Regulations.

C. Pre-Installation Meetings

1. Keying Conference
   a. Incorporate keying conference decisions into final keying schedule after reviewing door hardware keying system including:
      1) Function of building, flow of traffic, purpose of each area, degree of security required, and plans for future expansion.
      2) Preliminary key system schematic diagram.
      3) Requirements for key control system.
      4) Requirements for access control.
      5) Address for delivery of keys.

2. Pre-installation Conference
   a. Review and finalize construction schedule and verify availability of materials, Installer's personnel, equipment, and facilities needed to make progress and avoid delays.
   b. Inspect and discuss preparatory work performed by other trades.
   c. Inspect and discuss electrical roughing-in for electrified door hardware.
   d. Review sequence of operation for each type of electrified door hardware.
   e. Review required testing, inspecting, and certifying procedures.
   f. Review questions or concerns related to proper installation and adjustment of door hardware.

3. Electrified Hardware Coordination Conference:
   a. Prior to ordering electrified hardware, schedule and hold meeting to coordinate door hardware with security, electrical, doors and frames, and other related suppliers.

4. Hurricane and Wind Load Assemblies:
   a. Provide hardware that meets the hurricane and wind load test requirements in accordance with the Florida Building code and in compliance with the local authority having jurisdiction.
   b. All openings required to meet either the impact test or wind load test as indicated by the architect shall be tested as systems with the finish hardware, hollow metal doors, and frames.

Attachment: Exhibit B - Fire Station #96 Project Manual (2023-R-55 : Fire Station Construction)

1.05 DELIVERY, STORAGE, AND HANDLING

A. Inventory door hardware on receipt and provide secure lock-up for hardware delivered to Project site. Promptly replace products damaged during shipping.

B. Tag each item or package separately with identification coordinated with final door hardware schedule, and include installation instructions, templates, and necessary fasteners with each item or package. Deliver each article of hardware in manufacturer's original packaging.

C. Maintain manufacturer-recommended environmental conditions throughout storage and installation periods.

D. Provide secure lock-up for door hardware delivered to Project. Control handling and installation of hardware items so that completion of Work will not be delayed by hardware losses both before and after installation.

E. Handle hardware in manner to avoid damage, marring, or scratching. Correct, replace or repair products damaged during Work. Protect products against malfunction due to paint, solvent, cleanser, or any chemical agent.

F. Deliver keys to manufacturer of key control system for subsequent delivery to Owner.

1.06 COORDINATION

A. Coordinate layout and installation of floor-recessed door hardware with floor construction. Cast anchoring inserts into concrete.

B. Installation Templates: Distribute for doors, frames, and other work specified to be factory or shop prepared. Check Shop Drawings of other work to confirm that adequate provisions are made for locating and installing door hardware to comply with indicated requirements.

C. Security: Coordinate installation of door hardware, keying, and access control with Owner's security consultant.

D. Electrical System Roughing-In: Coordinate layout and installation of electrified door hardware with connections to power supplies and building safety and security systems.

1.07 WARRANTY

A. Manufacturer's standard form in which manufacturer agrees to repair or replace components of door hardware that fail in materials or workmanship within published warranty period.

1. Warranty does not cover damage or faulty operation due to improper installation, improper use or abuse.
2. Warranty Period: Beginning from date of Substantial Completion, for durations indicated in manufacturer's published listings.

1.08 MAINTENANCE

A. Furnish complete set of special tools required for maintenance and adjustment of hardware, including changing of cylinders.

Attachment: Exhibit B - Fire Station #96 Project Manual (2023-R-55 : Fire Station Construction)

B. Turn over unused materials to Owner for maintenance purposes.

PART 2 - PRODUCTS

2.01 MANUFACTURERS

A. Approval of alternate manufacturers and/or products other than those listed as "Scheduled Manufacturer" in the individual article for the product category are only to be considered by official substitution request in accordance with section 01 25 00.

B. Approval of products from manufacturers is contingent upon those products providing all functions and features and meeting all requirements of scheduled manufacturer's product.

C. Where specified hardware is not adaptable to finished shape or size of members requiring hardware, furnish suitable types having same operation and quality as type specified, subject to Architect's approval.

2.02 MATERIALS

A. Fabrication

1. Provide door hardware manufactured to comply with published templates generally prepared for machine, wood, and sheet metal screws. provide screws according to manufacturer’s recognized installation standards for application intended.
2. Finish exposed screws to match hardware finish, or, if exposed in surfaces of other work, to match finish of this other work including prepared for paint surfaces to receive painted finish.
3. Provide concealed fasteners wherever possible for hardware units exposed when door is closed. Coordinate with “Metal Doors and Frames”, “Flush Wood Doors”, “Stile and Rail Wood Doors” to ensure proper reinforcements. Advise the Architect where visible fasteners, such as thru bolts, are required.

B. Provide screws, bolts, expansion shields, drop plates and other devices necessary for hardware installation.

1. Where fasteners are exposed to view: Finish to match adjacent door hardware material.

C. Cable and Connectors:

1. Where scheduled in the hardware sets, provide each item of electrified hardware and wire harnesses with number and gage of wires enough to accommodate electric function of specified hardware.
2. Provide Molex connectors that plug directly into connectors from harnesses, electric locking and power transfer devices.
3. Provide through-door wire harness for each electrified locking device installed in a door and wire harness for each electrified hinge, electrified continuous hinge, electrified pivot, and electric power transfer for connection to power supplies.

2.03 HINGES

A. Manufacturers and Products:

Attachment: Exhibit B - Fire Station #96 Project Manual (2023-R-55 : Fire Station Construction)

1. Scheduled Manufacturer and Product:
   a. Ives 5BB series

B. Requirements:

1. Provide hinges conforming to ANSI/BHMA A156.1.
2. Provide five knuckle, ball bearing hinges.
3. 1-3/4 inch (44 mm) thick doors, up to and including 36 inches (914 mm) wide:
   a. Exterior: Standard weight, bronze or stainless steel, 4-1/2 inches (114 mm) high
   b. Interior: Standard weight, steel, 4-1/2 inches (114 mm) high
4. 1-3/4 inch (44 mm) thick doors over 36 inches (914 mm) wide:
   a. Exterior: Heavy weight, bronze/stainless steel, 5 inches (127 mm) high
   b. Interior: Heavy weight, steel, 5 inches (127 mm) high
5. 2 inches or thicker doors:
   a. Exterior: Heavy weight, bronze or stainless steel, 5 inches (127 mm) high
   b. Interior: Heavy weight, steel, 5 inches (127 mm) high
6. Adjust hinge width for door, frame, and wall conditions to allow proper degree of opening.
7. Provide three hinges per door leaf for doors 90 inches (2286 mm) or less in height, and one additional hinge for each 30 inches (762 mm) of additional door height.
8. Hinge Pins: Except as otherwise indicated, provide hinge pins as follows:
   a. Steel Hinges: Steel pins
   b. Non-Ferrous Hinges: Stainless steel pins
   c. Out-Swinging Exterior Doors: Non-removable pins
   d. Out-Swinging Interior Lockable Doors: Non-removable pins
   e. Interior Non-lockable Doors: Non-rising pins
9. Provide hinges with electrified options as scheduled in the hardware sets. Provide with number and gage of wires enough to accommodate electric function of specified hardware. Locate electric hinge at second hinge from bottom or nearest to electrified locking component. Provide mortar guard for each electrified hinge specified.

2.04 ELECTRIC POWER TRANSFER

A. Manufacturers:

1. Scheduled Manufacturer and Product:
   a. Von Duprin EPT-10

B. Requirements:

1. Provide power transfer with electrified options as scheduled in the hardware sets. Provide with number and gage of wires enough to accommodate electric function of specified hardware.
2. Locate electric power transfer per manufacturer's template and UL requirements, unless interference with operation of door or other hardware items.

2.05 MORTISE LOCKS

A. Manufacturers and Products:

1. Scheduled Manufacturer and Product:
   a. Schlage L9000 series

Attachment: Exhibit B - Fire Station #96 Project Manual (2023-R-55 : Fire Station Construction)

B. Requirements:

1. Provide mortise locks conforming to ANSI/BHMA A156.13 Series 1000, Grade 1, and UL Listed for 3-hour fire doors.
2. Indicators: Where specified, provide indicator window measuring a minimum 2-inch x 1/2 inch with 180-degree visibility. Provide messages color-coded with full text and/or symbols, as scheduled, for easy visibility.
3. Provide locks manufactured from heavy gauge steel, containing components of steel with a zinc dichromate plating for corrosion resistance.
4. Provide lock case that is multi-function and field reversible for handing without opening case. Cylinders: Refer to "KEYING" article, herein.
5. Provide locks with standard 2-3/4 inches (70 mm) backset with full 3/4 inch (19 mm) throw stainless steel mechanical anti-friction latchbolt. Provide deadbolt with full 1-inch (25 mm) throw, constructed of stainless steel.
6. Provide standard ASA strikes unless extended lip strikes are necessary to protect trim. Provide electrified options as scheduled in the hardware sets. Where scheduled, provide switches and sensors integrated into the locks and latches.
7. Provide motor based electrified locksets that comply with the following requirements:
   a. Universal input voltage – single chassis accepts 12 or 24VDC to allow for changes in the field without changing lock chassis.
   b. Fail Safe/Fail Secure – changing mode between electrically locked (fail safe) and electrically unlocked (fail secure) is field selectable without opening the lock case.
   c. Low maximum current draw – maximum 0.4 amps to allow for multiple locks on a single power supply.
   d. Low holding current – maximum 0.01 amps to produce minimal heat, eliminate “hot levers” in electrically locked applications, and to provide reliable operation in wood doors that provide minimal ventilation and air flow.
   e. Connections – provide quick-connect Molex system standard.

8. Lever Trim: Solid brass, bronze, or stainless steel, cast or forged in design specified, with wrought roses and external lever spring cages. Provide thru-bolted levers with 2-piece spindles.
   a. Lever Design: 06A

2.06 THREE POINT LOCK

A. Manufacturer and Product:

1. Scheduled Manufacturer and Product:
   a. Schlage LM9300

B. Requirements:

1. Provide three-point locking system as part of integrated assembly including door, frame, and hardware.
2. Tornado Applications: Provide assembly UL approved to FEMA 361 and FEMA 320 guidelines for inswing and outswing single or pair doors. Must be used with tested and approved door and frame system.
3. Security Applications: Provide inswing and outswing single or pair doors. Must be used with tested and approved door.
4. Units to comply with life safety requirements outlined in NFPA 80 and NFPA 101 and approved for use on up to 3-hour fire rated openings.
5. Latchbolt Construction:

Attachment: Exhibit B - Fire Station #96 Project Manual (2023-R-55 : Fire Station Construction)

a. Top Bolt: 5/8-inch (16 mm) Stainless Steel square bolt with 3/4-inch (19 mm) projection. 1/2 inch (13 mm) thick steel top plate. Stainless steel sill strike and fasteners.
b. Mortised Center Latchbolt: Stainless Steel latch. Fully wrapped, 12-gauge plated steel lock case. 2-3/4 inches (70 mm) backset. ANSI/BHMA curved lip strike 1-1/4 inches (32 mm) x 4-7/8 inches (124 mm) with dust box, non-handed.
c. Bottom Bolt: 5/8-inch (16 mm) Stainless Steel square bolt with 5/8-inch (16 mm) projection. Stainless steel sill strike and fasteners.

6. Lever Trim: Solid brass, bronze, or stainless steel, cast or forged in design specified, with wrought roses or escutcheon as scheduled and external lever spring cages. Provide thru-bolted levers with 2-piece spindles.
   a. Lever Design: 06A

2.07 CYLINDRICAL LOCKS – GRADE 1

A. Manufacturers and Products:

1. Scheduled Manufacturer and Product:
   a. Schlage ND series

B. Requirements:

1. Provide cylindrical locks conforming to ANSI/BHMA A156.2 Series 4000, Grade 1, and UL Listed for 3-hour fire doors.
2. Cylinders: Refer to "KEYING" article, herein.
3. Provide locks with standard 2-3/4 inches (70 mm) backset, unless noted otherwise, with 1/2-inch latch throw. Provide proper latch throw for UL listing at pairs.
4. Provide locksets with separate anti-rotation thru-bolts, and no exposed screws.
5. Provide independently operating levers with two external return spring cassettes mounted under roses to prevent lever sag.
6. Provide standard ASA strikes unless extended lip strikes are necessary to protect trim.
7. Provide electrified options as scheduled in the hardware sets.
8. Lever Trim: Solid cast levers without plastic inserts and wrought roses on both sides.
   a. Lever Design: RHO

2.08 EXIT DEVICES

A. Manufacturers and Products:

1. Scheduled Manufacturer and Product:
   a. Von Duprin 98/99 series

B. Requirements:

1. Provide exit devices tested to ANSI/BHMA A156.3 Grade 1 and UL listed for Panic Exit or Fire Exit Hardware.
2. Cylinders: Refer to "KEYING" article, herein.
3. Provide smooth touchpad type exit devices, fabricated of brass, bronze, stainless steel, or aluminum, plated to standard architectural finishes to match balance of door hardware.
4. Touchpad must extend a minimum of one half of door width. No plastic inserts are allowed in touchpads.
5. Provide exit devices with deadlatching feature for security and for future addition of alarm kits and/or other electrified requirements.

Attachment: Exhibit B - Fire Station #96 Project Manual (2023-R-55 : Fire Station Construction)

6. Provide exit devices with weather resistant components that can withstand harsh conditions of various climates and corrosive cleaners used in outdoor pool environments.
7. Provide flush end caps for exit devices.
8. Provide exit devices with manufacturer's approved strikes.
9. Provide exit devices cut to door width and height. Install exit devices at height recommended by exit device manufacturer, allowable by governing building codes, and approved by Architect.
10. Mount mechanism case flush on face of doors or provide spacers to fill gaps behind devices. Where glass trim or molding projects off face of door, provide glass bead kits.
11. Provide cylinder or hex-key dogging as specified at non fire-rated openings.
12. Removable Mullions: 2 inches (51 mm) x 3 inches (76 mm) steel tube. Where scheduled as keyed removable mullion, provide type that can be removed by use of a keyed cylinder, which is self-locking when re-installed.
13. Provide factory drilled weep holes for exit devices used in full exterior application, highly corrosive areas, and where noted in hardware sets.
14. Provide electrified options as scheduled.
15. Top latch mounting: double- or single-tab mount for steel doors, face mount for aluminum doors eliminating requirement of tabs, and double tab mount for wood doors.
16. Provide exit devices with optional trim designs to match other lever and pull designs used on the project.
17. Special Options:
    a. HH
        1) Provide wind and impact rated hurricane exit devices and mullions certified to comply with Florida Building Code (FBC) TAS 201, 202, 203.

2.09 CYLINDERS

A. Manufacturers:

1. Scheduled Manufacturer and Product:
    a. Schlage

B. Requirements:

1. Provide cylinders/cores to match Owner’s chosen key system, compliant with ANSI/BHMA A156.5; latest revision; cylinder face finished to match lockset, manufacturer’s series as indicated. Refer to “KEYING” article, herein.

2.10 KEYING

A. Scheduled System:

1. New factory registered system:
    a. Provide a factory registered keying system, complying with guidelines in ANSI/BHMA A156.28, incorporating decisions made at keying conference.

B. Requirements:

1. Construction Keying:
    a. Temporary Construction Cylinder Keying.
        1) Provide construction cores that permit voiding construction keys without cylinder removal, furnished in accordance with the following requirements.
            a) Split Key or Lost Ball Construction Keying System.

Attachment: Exhibit B - Fire Station #96 Project Manual (2023-R-55 : Fire Station Construction)

b) 3 construction control keys, and extractor tools or keys as required to void construction keying.
c) 12 construction change (day) keys.
2) Owner or Owner's Representative will void operation of temporary construction keys.

2. Permanent Keying:
a. Provide permanent cylinders/cores keyed according to the following key system.
1) Master Keying system as directed by the Owner.
b. Forward bitting list and keys separately from cylinders, by means as directed by Owner. Failure to comply with forwarding requirements will be cause for replacement of cylinders/cores involved at no additional cost to Owner.
c. Provide keys with the following features:
1) Material: Nickel silver; minimum thickness of .107-inch (2.3mm)
2) Patent Protection: Keys and blanks protected by one or more utility patent(s).
d. Identification:
1) Mark permanent cylinders/cores and keys with applicable blind code for identification. Do not provide blind code marks with actual key cuts.
2) Identification stamping provisions must be approved by the Architect and Owner.
3) Stamp cylinders/cores and keys with Owner's unique key system facility code as established by the manufacturer; key symbol and embossed or stamped with "DO NOT DUPLICATE" along with the "PATENTED" or patent number to enforce the patent protection.
4) Failure to comply with stamping requirements will be cause for replacement of keys involved at no additional cost to Owner.
5) Forward permanent cylinders/cores to Owner, separately from keys, by means as directed by Owner.
e. Quantity: Furnish in the following quantities.
1) Change (Day) Keys: 3 per cylinder/core.
2) Permanent Control Keys: 3.
3) Master Keys: 6.

2.11 KEY CONTROL SYSTEM

A. Manufacturers:

1. Scheduled Manufacturer:
a. Telkee

B. Requirements:

1. Provide key control system, including envelopes, labels, tags with self-locking key clips, receipt forms, 3-way visible card index, temporary markers, permanent markers, and standard metal cabinet, all as recommended by system manufacturer, with capacity for 150% of number of locks required for Project.
a. Provide complete cross index system set up by hardware supplier, and place keys on markers and hooks in cabinet as determined by final key schedule.
b. Provide hinged-panel type cabinet for wall mounting.

2.12 DOOR CLOSERS

A. Manufacturers and Products:

1. Scheduled Manufacturer and Product:

Attachment: Exhibit B - Fire Station #96 Project Manual (2023-R-55 : Fire Station Construction)

a. LCN 4040XP series

B. Requirements:

1. Provide door closers conforming to ANSI/BHMA A156.4 Grade 1 requirements by BHMA certified independent testing laboratory. ISO 9000 certify closers. Stamp units with date of manufacture code.
2. Provide door closers with fully hydraulic, full rack and pinion action with high strength cast iron cylinder, and full complement bearings at shaft.
3. Cylinder Body: 1-1/2-inch (38 mm) diameter piston with 5/8-inch (16 mm) diameter double heat-treated pinion journal. QR code with a direct link to maintenance instructions.
4. Hydraulic Fluid: Fireproof, passing requirements of UL10C, and requiring no seasonal closer adjustment for temperatures ranging from 120 degrees F to -30 degrees F.
5. Spring Power: Continuously adjustable over full range of closer sizes, and providing reduced opening force as required by accessibility codes and standards. Provide snap-on cover clip, with plastic covers, that secures cover to spring tube.
6. Hydraulic Regulation: By tamper-proof, non-critical valves, with separate adjustment for latch speed, general speed, and backcheck. Provide graphically labelled instructions on the closer body adjacent to each adjustment valve. Provide positive stop on reg valve that prevents reg screw from being backed out.
7. Provide closers with solid forged steel main arms and factory assembled heavy-duty forged forearms for parallel arm closers.
8. Pressure Relief Valve (PRV) Technology: Not permitted.
9. Finish for Closer Cylinders, Arms, Adapter Plates, and Metal Covers: Powder coating finish which has been certified to exceed 100 hours salt spray testing as described in ANSI Standard A156.4 and ASTM B117, or has special rust inhibitor (SRI).
10. Provide special templates, drop plates, mounting brackets, or adapters for arms as required for details, overhead stops, and other door hardware items interfering with closer mounting.

2.13 DOOR TRIM

A. Manufacturers:

1. Scheduled Manufacturer:
   a. Ives

B. Requirements:

1. Provide push plates, push bars, pull plates, pulls, and hands-free reversible door pulls with diameter and length as scheduled.

2.14 PROTECTION PLATES

A. Manufacturers:

1. Scheduled Manufacturer:
   a. Ives

B. Requirements:

1. Provide protection plates with a minimum of 0.050 inch (1 mm) thick, beveled four edges as scheduled. Furnish with sheet metal or wood screws, finished to match plates.

Attachment: Exhibit B - Fire Station #96 Project Manual (2023-R-55 : Fire Station Construction)

2. Sizes plates 2 inches (51 mm) less width of door on single doors, pairs of doors with a mullion, and doors with edge guards. Size plates 1 inch (25 mm) less width of door on pairs without a mullion or edge guards.
3. At fire rated doors, provide protection plates over 16 inches high with UL label.

2.15 OVERHEAD STOPS AND OVERHEAD STOP/HOLDERS

A. Manufacturers:

1. Scheduled Manufacturers:
   a. Glynn-Johnson

B. Requirements:

1. Provide overhead stop at any door where conditions do not allow for a wall stop or floor stop presents tripping hazard.
2. Provide friction type at doors without closer and positive type at doors with closer.

2.16 DOOR STOPS AND HOLDERS

A. Manufacturers:

1. Scheduled Manufacturer:
   a. Ives

B. Provide door stops at each door leaf:

1. Provide wall stops wherever possible. Provide concave type where lockset has a push button of thumbturn.
2. Where a wall stop cannot be used, provide universal floor stops.
3. Where wall or floor stop cannot be used, provide overhead stop.
4. Provide roller bumper where doors open into each other and overhead stop cannot be used.

2.17 THRESHOLDS, SEALS, DOOR SWEEPS, AUTOMATIC DOOR BOTTOMS, AND GASKETING

A. Manufacturers:

1. Scheduled Manufacturer:
   a. Zero International

B. Requirements:

1. Provide thresholds, weather-stripping, and gasketing systems as specified and per architectural details. Match finish of other items.
2. Smoke- and Draft-Control Door Assemblies: Where smoke- and draft-control door assemblies are required, provide door hardware that meets requirements of assemblies tested according to UL 1784 and installed in compliance with NFPA 105.
3. Provide door sweeps, seals, astragals, and auto door bottoms only of type where resilient or flexible seal strip is easily replaceable and readily available.
4. Size thresholds 1/2 inch (13 mm) high by 5 inches (127 mm) wide by door width unless otherwise specified in the hardware sets or detailed in the drawings.

Attachment: Exhibit B - Fire Station #96 Project Manual (2023-R-55 : Fire Station Construction)

2.18 DOOR POSITION SWITCHES

A. Manufacturers:

1. Scheduled Manufacturer:
   a. Schlage

B. Requirements:

1. Provide recessed or surface mounted type door position switches as specified.
2. Coordinate door and frame preparations with door and frame suppliers. If switches are being used with magnetic locking device, provide minimum of 4 inches (102 mm) between switch and magnetic locking device.

2.19 FINISHES

A. FINISH: BHMA 626/652 (US26D); EXCEPT:

1. Hinges at Exterior Doors: BHMA 630 (US32D)
2. Aluminum Geared Continuous Hinges: BHMA 628 (US28)
3. Push Plates, Pulls, and Push Bars: BHMA 630 (US32D)
4. Protection Plates: BHMA 630 (US32D)
5. Overhead Stops and Holders: BHMA 630 (US32D)
6. Door Closers: Powder Coat to Match
7. Wall Stops: BHMA 630 (US32D)
8. Latch Protectors: BHMA 630 (US32D)
9. Weatherstripping: Clear Anodized Aluminum
10. Thresholds: Mill Finish Aluminum

PART 3 - EXECUTION

3.01 EXAMINATION

A. Prior to installation of hardware, examine doors and frames, with Installer present, for compliance with requirements for installation tolerances, labeled fire-rated door assembly construction, wall and floor construction, and other conditions affecting performance. Verify doors, frames, and walls have been properly reinforced for hardware installation.

B. Examine roughing-in for electrical power systems to verify actual locations of wiring connections before electrified door hardware installation.

C. Submit a list of deficiencies in writing and proceed with installation only after unsatisfactory conditions have been corrected.

3.02 INSTALLATION

A. Mount door hardware units at heights to comply with the following, unless otherwise indicated or required to comply with governing regulations.

1. Standard Steel Doors and Frames: ANSI/SDI A250.8.
2. Custom Steel Doors and Frames: HMMA 831.
3. Interior Architectural Wood Flush Doors: ANSI/WDMA I.S. 1A

Attachment: Exhibit B - Fire Station #96 Project Manual (2023-R-55 : Fire Station Construction)

4. Installation Guide for Doors and Hardware: DHI TDH-007-20

B. Install door hardware in accordance with NFPA 80, NFPA 101 and provide post-install inspection, testing as specified in section 1.03.E unless otherwise required to comply with governing regulations.

C. Install each hardware item in compliance with manufacturer's instructions and recommendations, using only fasteners provided by manufacturer.

D. Do not install surface mounted items until finishes have been completed on substrate. Protect all installed hardware during painting.

E. Set units level, plumb and true to line and location. Adjust and reinforce attachment substrate as necessary for proper installation and operation.

F. Drill and countersink units that are not factory prepared for anchorage fasteners. Space fasteners and anchors according to industry standards.

G. Install operating parts so they move freely and smoothly without binding, sticking, or excessive clearance.

H. Hinges: Install types and in quantities indicated in door hardware schedule but not fewer than quantity recommended by manufacturer for application indicated.

I. Lock Cylinders:

1. Install construction cores to secure building and areas during construction period.
2. Replace construction cores with permanent cores as indicated in keying section.
3. Furnish permanent cores to Owner for installation.

J. Wiring: Coordinate with Division 26, ELECTRICAL and Division 28 ELECTRONIC SAFETY AND SECURITY sections for:

1. Conduit, junction boxes and wire pulls.
2. Connections to and from power supplies to electrified hardware.
3. Connections to fire/smoke alarm system and smoke evacuation system.
4. Connection of wire to door position switches and wire runs to central room or area, as directed by Architect.
5. Connections to panel interface modules, controllers, and gateways.
6. Testing and labeling wires with Architect's opening number.

K. Key Control System: Tag keys and place them on markers and hooks in key control system cabinet, as determined by final keying schedule.

L. Door Closers: Mount closers on room side of corridor doors, inside of exterior doors, and stair side of stairway doors from corridors. Mount closers so they are not visible in corridors, lobbies and other public spaces unless approved by Architect.

M. Closer/Holders: Mount closer/holders on room side of corridor doors, inside of exterior doors, and stair side of stairway doors.

N. Power Supplies: Locate power supplies as indicated or, if not indicated, above accessible ceilings or in equipment room, or alternate location as directed by Architect.

Attachment: Exhibit B - Fire Station #96 Project Manual (2023-R-55 : Fire Station Construction)

O. Thresholds: Set thresholds in full bed of sealant complying with requirements specified in Division 07 Section "Joint Sealants."

P. Stops: Provide floor stops for doors unless wall or other type stops are indicated in door hardware schedule. Do not mount floor stops where they may impede traffic or present tripping hazard.

Q. Perimeter Gasketing: Apply to head and jamb, forming seal between door and frame.

R. Meeting Stile Gasketing: Fasten to meeting stiles, forming seal when doors are closed.

S. Door Bottoms and Sweeps: Apply to bottom of door, forming seal with threshold when door is closed.

3.03 ADJUSTING

A. Initial Adjustment: Adjust and check each operating item of door hardware and each door to ensure proper operation or function of every unit. Replace units that cannot be adjusted to operate as intended. Adjust door control devices to compensate for final operation of heating and ventilating equipment and to comply with referenced accessibility requirements.

1. Spring Hinges: Adjust to achieve positive latching when door can close freely from an open position of 30 degrees.
2. Electric Strikes: Adjust horizontal and vertical alignment of keeper to properly engage lock bolt.
3. Door Closers: Adjust sweep period to comply with accessibility requirements and requirements of authorities having jurisdiction.

B. Occupancy Adjustment: Approximately three to six months after date of Substantial Completion, examine and readjust each item of door hardware, including adjusting operating forces, as necessary to ensure function of doors and door hardware.

3.04 CLEANING AND PROTECTION

A. Clean adjacent surfaces soiled by door hardware installation.

B. Clean operating items per manufacturer's instructions to restore proper function and finish.

C. Provide final protection and maintain conditions that ensure door hardware is without damage or deterioration at time of Substantial Completion.

3.05 DOOR HARDWARE SCHEDULE

A. The intent of the hardware specification is to specify the hardware for interior and exterior doors, and to establish a type, continuity, and standard of quality. However, it is the door hardware supplier's responsibility to thoroughly review existing conditions, schedules, specifications, drawings, and other Contract Documents to verify the suitability of the hardware specified.

Attachment: Exhibit B - Fire Station #96 Project Manual (2023-R-55 : Fire Station Construction)

B. Discrepancies, conflicting hardware, and missing items are to be brought to the attention of the architect with corrections made prior to the bidding process. Omitted items not included in a hardware set should be scheduled with the appropriate additional hardware required for proper application.

C. Hardware items are referenced in the following hardware schedule. Refer to the above specifications for special features, options, cylinders/keying, and other requirements.

D. Hardware Sets:

Door#	**HwSet#**
01	01
02	10
03	09
04	11
05	13
06	16
07	10
08	08
09	19
10	15
11	15
12	14
13	19
14	12
15	18
16	17
17	17
18	17
19	19
20	02
21	03
22	04
23	05
24	04
25	07
26	06
27	02
28	20
29	20
30	20
31	20

Attachment: Exhibit B - Fire Station #96 Project Manual (2023-R-55 : Fire Station Construction)

Hardware Group No. 01

Provide each SGL door(s) with the following:

QTY		DESCRIPTION	CATALOG NUMBER		FINISH	MFR
3	EA	HINGE	5BB1HW 4.5 X 4.5 NRP		630	IVE
1	EA	POWER TRANSFER	EPT10		689	VON
1	EA	ELEC PANIC HARDWARE	RX-QEL-HH-9847-NL-OP-110MD-304L-SNB 24 VDC		626	VON
1	EA	RIM CYLINDER	20-057 ICX		626	SCH
1	EA	FSIC CORE	23-030		626	SCH
1	EA	90 DEG OFFSET PULL	8190EZHD		630-316	IVE
1	EA	SURFACE CLOSER	4040XP SCUSH		689	LCN
1	EA	PA MOUNTING PLATE	4040XP-18PA		689	LCN
1	EA	CUSH SHOE SUPPORT	4040XP-30		689	LCN
1	EA	BLADE STOP SPACER	4040XP-61		689	LCN
1	EA	KEYPAD	BY SECURITY PROVIDER		BLK	SCE
1	EA	POWER SUPPLY	PS902 900-2RS 120/240 VAC		LGR	SCE

BALANCE OF HARDWARE BY STOREFRONT DOOR MANUFACTURER
INSTALLED PER FLORIDA PRODUCT APPROVAL LEVEL E IMPACT
ACCESS CONTROL BY SECURITY SUB

Hardware Group No. 02

Provide each SGL door(s) with the following:

QTY		DESCRIPTION	CATALOG NUMBER		FINISH	MFR
3	EA	HINGE	5BB1HW 4.5 X 4.5 NRP		630	IVE
1	EA	POWER TRANSFER	EPT10		689	VON
1	EA	ELEC PANIC HARDWARE	RX-QEL-WS-9927-L-06 24 VDC		626	VON
1	EA	ROD AND LATCH GUARD	WS-LGO-3-		630	VON
1	EA	RIM CYLINDER	20-057 ICX		626	SCH
1	EA	FSIC CORE	23-030		626	SCH
1	EA	SURFACE CLOSER	4040XP SCUSH		689	LCN
1	EA	RAIN DRIP	11A		A	ZER
1	EA	GASKETING	188SBK PSA		BK	ZER
1	EA	DOOR SWEEP	39A		A	ZER
1	EA	THRESHOLD	566A		A	ZER
1	EA	KEYPAD	BY SECURITY PROVIDER		BLK	SCE
1	EA	DOOR CONTACT	BY DIV. 28		BLK	SCE
1	EA	POWER SUPPLY	PS902 900-2RS 120/240 VAC		LGR	SCE

INSTALLED PER FLORIDA PRODUCT APPROVAL LEVEL E IMPACT
ACCESS CONTROL BY SECURITY SUB
DOOR IS CLOSED AND LOCKED
FREE EGRESS AT ALL TIMES
KEY LOCKS AND UNLOCKS THE LEVER FROM THE EXTERIOR,
DOOR MOMENTARILY UNLOCKED FROM REMOTE MONITORING STATION AND RETRACTS LATCH
LOCK IS FAIL SECURE
REQUEST TO EXIT SWITCH AND DOOR CONTACT SIGNALS THE APPROPRIATE PARTY

Attachment: Exhibit B - Fire Station #96 Project Manual (2023-R-55 : Fire Station Construction)

Hardware Group No. 03

Provide each SGL door(s) with the following:

QTY		DESCRIPTION	CATALOG NUMBER		FINISH	MFR
3	EA	HINGE	5BB1HW 4.5 X 4.5 NRP		630	IVE
1	EA	POWER TRANSFER	EPT10		689	VON
1	EA	ELEC PANIC HARDWARE	RX-QEL-WS-9927-L-06 24 VDC		626	VON
1	EA	ROD AND LATCH GUARD	WS-LGO-3-		630	VON
1	EA	RIM CYLINDER	20-057 ICX		626	SCH
1	EA	FSIC CORE	23-030		626	SCH
1	EA	SURFACE CLOSER	4040XP EDA		689	LCN
1	EA	WALL STOP	WS406/407CVX		630	IVE
1	EA	GASKETING	188SBK PSA		BK	ZER
1	EA	DOOR SWEEP	39A		A	ZER
1	EA	THRESHOLD	566A		A	ZER
1	EA	KEYPAD	BY SECURITY PROVIDER		BLK	SCE
1	EA	DOOR CONTACT	BY DIV. 28		BLK	SCE
1	EA	POWER SUPPLY	PS902 900-2RS 120/240 VAC		LGR	SCE

INSTALLED PER FLORIDA PRODUCT APPROVAL LEVEL E IMPACT
ACCESS CONTROL BY SECURITY SUB
DOOR IS CLOSED AND LOCKED
FREE EGRESS AT ALL TIMES
KEY LOCKS AND UNLOCKS THE LEVER FROM THE EXTERIOR,
DOOR MOMENTARILY UNLOCKED FROM REMOTE MONITORING STATION AND RETRACTS LATCH
LOCK IS FAIL SECURE
REQUEST TO EXIT SWITCH AND DOOR CONTACT SIGNALS THE APPROPRIATE PARTY

Hardware Group No. 04

Provide each SGL door(s) with the following:

QTY		DESCRIPTION	CATALOG NUMBER		FINISH	MFR
3	EA	HINGE	5BB1HW 4.5 X 4.5 NRP		630	IVE
1	EA	MULT PT CLASSROOM	LM9370P6 06A		626	SCH
1	EA	SURFACE CLOSER	4040XP SCUSH		689	LCN
1	EA	KICK PLATE	8400 10" X 2" LDW B-CS		630	IVE
1	EA	GASKETING	188SBK PSA		BK	ZER
1	EA	DOOR SWEEP	39A		A	ZER
1	EA	THRESHOLD	566A		A	ZER

Attachment: Exhibit B - Fire Station #96 Project Manual (2023-R-55 : Fire Station Construction)

Hardware Group No. 05

Provide each SGL door(s) with the following:

QTY		DESCRIPTION	CATALOG NUMBER		FINISH	MFR
3	EA	HINGE	5BB1HW 4.5 X 4.5 NRP		630	IVE
1	EA	MULT PT STOREROOM	LM9380P6 806A 06A		626	SCH
1	EA	SURFACE CLOSER	4040XP SCUSH		689	LCN
1	EA	KICK PLATE	8400 10" X 2" LDW B-CS		630	IVE
1	EA	GASKETING	188SBK PSA		BK	ZER
1	EA	DOOR SWEEP	39A		A	ZER
1	EA	THRESHOLD	566A		A	ZER

INSTALLED PER FLORIDA PRODUCT APPROVAL LEVEL E IMPACT

Hardware Group No. 06

Provide each SGL door(s) with the following:

QTY		DESCRIPTION	CATALOG NUMBER		FINISH	MFR
3	EA	HINGE	5BB1HW 4.5 X 4.5 NRP		630	IVE
1	EA	MULT PT CLASSROOM	LM9370P6 06A		626	SCH
1	EA	OH STOP	90S		630	GLY
1	EA	SURFACE CLOSER	4040XP		689	LCN
1	EA	KICK PLATE	8400 10" X 2" LDW B-CS		630	IVE
1	EA	GASKETING	188SBK PSA		BK	ZER
1	EA	DOOR SWEEP	39A		A	ZER
1	EA	THRESHOLD	566A		A	ZER

INSTALLED PER FLORIDA PRODUCT APPROVAL LEVEL E IMPACT

Hardware Group No. 07

Provide each SGL door(s) with the following:

QTY		DESCRIPTION	CATALOG NUMBER		FINISH	MFR
3	EA	HINGE	5BB1HW 4.5 X 4.5 NRP		630	IVE
1	EA	MULT PT CLASSROOM	LM9370P6 06A		626	SCH
1	EA	SURFACE CLOSER	4040XP		689	LCN
1	EA	KICK PLATE	8400 10" X 2" LDW B-CS		630	IVE
1	EA	WALL STOP	WS406/407CVX		630	IVE
1	EA	GASKETING	188SBK PSA		BK	ZER
1	EA	DOOR SWEEP	39A		A	ZER
1	EA	THRESHOLD	566A		A	ZER

INSTALLED PER FLORIDA PRODUCT APPROVAL LEVEL E IMPACT

Attachment: Exhibit B - Fire Station #96 Project Manual (2023-R-55 : Fire Station Construction)

Hardware Group No. 08

Provide each SGL door(s) with the following:

QTY		DESCRIPTION	CATALOG NUMBER		FINISH	MFR
3	EA	HINGE	5BB1 4.5 X 4.5		652	IVE
1	EA	POWER TRANSFER	EPT10		689	VON
1	EA	EU STOREROOM LOCK	ND80P6DEU RHO RX 12V/24V DC		626	SCH
1	EA	SURFACE CLOSER	4040XP REG OR PA AS REQ		689	LCN
1	EA	KICK PLATE	8400 10" X 2" LDW B-CS		630	IVE
1	EA	WALL STOP	WS406/407CVX		630	IVE
1	EA	GASKETING	188SBK PSA		BK	ZER
1	EA	KEYPAD	BY SECURITY PROVIDER		BLK	SCE

ACCESS CONTROL AND POWER SUPPLY BY DIVISION 28
OUTSIDE LEVER UNLOCKED BY 12-24VDC.
EU IS FAIL SECURE
KEY OUTSIDE SERVES AS MECHANICAL OVERRIDE
INSIDE LEVER ALWAYS FREE FOR IMMEDIATE EGRESS.
REQUEST TO EXIT SWITCH AND DOOR CONTACT SIGNALS THE APPROPRIATE PARTY

Hardware Group No. 09

Provide each SGL door(s) with the following:

QTY		DESCRIPTION	CATALOG NUMBER	FINISH	MFR
3	EA	HINGE	5BB1 4.5 X 4.5	652	IVE
1	EA	PANIC HARDWARE	99-L-NL-06-KN	626	VON
1	EA	RIM CYLINDER	20-057 ICX	626	SCH
1	EA	FSIC CORE	23-030	626	SCH
1	EA	SURFACE CLOSER	4040XP SCUSH	689	LCN
1	EA	KICK PLATE	8400 10" X 2" LDW B-CS	630	IVE
1	EA	GASKETING	188SBK PSA	BK	ZER

Hardware Group No. 10

Provide each SGL door(s) with the following:

QTY		DESCRIPTION	CATALOG NUMBER	FINISH	MFR
3	EA	HINGE	5BB1 4.5 X 4.5	652	IVE
1	EA	STOREROOM LOCK	ND80P6D RHO	626	SCH
1	EA	SURFACE CLOSER	4040XP REG OR PA AS REQ	689	LCN
1	EA	KICK PLATE	8400 10" X 2" LDW B-CS	630	IVE
1	EA	WALL STOP	WS406/407CVX	630	IVE
1	EA	GASKETING	188SBK PSA	BK	ZER

Attachment: Exhibit B - Fire Station #96 Project Manual (2023-R-55 : Fire Station Construction)

Hardware Group No. 11

Provide each SGL door(s) with the following:

QTY		DESCRIPTION	CATALOG NUMBER		FINISH	MFR
3	EA	HINGE	5BB1 4.5 X 4.5		652	IVE
1	EA	STOREROOM LOCK	ND80P6D RHO		626	SCH
1	EA	WALL STOP	WS406/407CVX		630	IVE
1	EA	GASKETING	188SBK PSA		BK	ZER

Hardware Group No. 12

Provide each SGL door(s) with the following:

QTY		DESCRIPTION	CATALOG NUMBER		FINISH	MFR
3	EA	HINGE	5BB1 4.5 X 4.5		652	IVE
1	EA	ENTRANCE/OFFICE LOCK	ND50P6D RHO		626	SCH
1	EA	SURFACE CLOSER	4040XP REG OR PA AS REQ		689	LCN
1	EA	KICK PLATE	8400 10" X 2" LDW B-CS		630	IVE
1	EA	WALL STOP	WS406/407CCV		630	IVE
1	EA	GASKETING	188SBK PSA		BK	ZER

Hardware Group No. 13

Provide each SGL door(s) with the following:

QTY		DESCRIPTION	CATALOG NUMBER		FINISH	MFR
3	EA	HINGE	5BB1 4.5 X 4.5		652	IVE
1	EA	ENTRANCE/OFFICE LOCK	ND50P6D RHO		626	SCH
1	EA	WALL STOP	WS406/407CCV		630	IVE
1	EA	GASKETING	188SBK PSA		BK	ZER

Hardware Group No. 14

Provide each SGL door(s) with the following:

QTY		DESCRIPTION	CATALOG NUMBER		FINISH	MFR
3	EA	HINGE	5BB1 4.5 X 4.5		652	IVE
1	EA	ENTRANCE/OFFICE LOCK	ND50P6D RHO		626	SCH
1	EA	OH STOP	450S		630	GLY
1	EA	GASKETING	188SBK PSA		BK	ZER

Hardware Group No. 15

Provide each SGL door(s) with the following:

QTY		DESCRIPTION	CATALOG NUMBER		FINISH	MFR
3	EA	HINGE	5BB1 4.5 X 4.5		652	IVE
1	EA	PRIVACY LOCK	ND40S RHO		626	SCH
1	EA	SURFACE CLOSER	4040XP REG OR PA AS REQ		689	LCN
1	EA	KICK PLATE	8400 10" X 2" LDW B-CS		630	IVE
1	EA	WALL STOP	WS406/407CVX		630	IVE
1	EA	GASKETING	188SBK PSA		BK	ZER

Attachment: Exhibit B - Fire Station #96 Project Manual (2023-R-55 : Fire Station Construction)

Hardware Group No. 16

Provide each SGL door(s) with the following:

QTY		DESCRIPTION	CATALOG NUMBER		FINISH	MFR
3	EA	HINGE	5BB1 4.5 X 4.5		652	IVE
1	EA	PRIVACY LOCK	L9040 06A 09-544 L283-722		626	SCH
1	EA	SURFACE CLOSER	4040XP SCUSH		689	LCN
1	EA	KICK PLATE	8400 10" X 2" LDW B-CS		630	IVE
1	EA	GASKETING	188SBK PSA		BK	ZER

Hardware Group No. 17

Provide each SGL door(s) with the following:

QTY		DESCRIPTION	CATALOG NUMBER		FINISH	MFR
3	EA	HINGE	5BB1 4.5 X 4.5		652	IVE
1	EA	PRIVACY LOCK	ND40S RHO		626	SCH
1	EA	OH STOP	450S		630	GLY
1	EA	GASKETING	188SBK PSA		BK	ZER

Hardware Group No. 18

Provide each SGL door(s) with the following:

QTY		DESCRIPTION	CATALOG NUMBER		FINISH	MFR
3	EA	HINGE	5BB1 4.5 X 4.5		652	IVE
1	EA	PASSAGE SET	ND10S RHO		626	SCH
1	EA	OH STOP	450S		630	GLY
1	EA	GASKETING	188SBK PSA		BK	ZER

Hardware Group No. 19

For use on Door #(s):

Provide each SGL door(s) with the following:

QTY		DESCRIPTION	CATALOG NUMBER		FINISH	MFR
3	EA	HINGE	5BB1 4.5 X 4.5		652	IVE
1	EA	PUSH PLATE	8200 6" X 16"		630	IVE
1	EA	PULL PLATE	8303 10" 6" X 16"		630	IVE
1	EA	SURFACE CLOSER	4040XP REG OR PA AS REQ		689	LCN
1	EA	KICK PLATE	8400 10" X 2" LDW B-CS		630	IVE
1	EA	WALL STOP	WS406/407CVX		630	IVE
1	EA	GASKETING	188SBK PSA		BK	ZER

Hardware Group No. 20

Provide each RU door(s) with the following:

QTY		DESCRIPTION	CATALOG NUMBER		FINISH	MFR
1	EA	CYLINDER	AS REQUIRED		626	SCH

ALL HARDWARE BY ROLL UP DOOR MANUFACTURER

Attachment: Exhibit B - Fire Station #96 Project Manual (2023-R-55 : Fire Station Construction)

END OF SECTION

Attachment: Exhibit B - Fire Station #96 Project Manual (2023-R-55 : Fire Station Construction)

SECTION 092116
GYPSUM BOARD ASSEMBLIES

PART 1 GENERAL

1.01 SECTION INCLUDES

A. Acoustic insulation and sealant.

B. Gypsum wallboard.

C. Glass mat faced gypsum board.

D. Joint treatment and accessories.

1.02 RELATED REQUIREMENTS

A. Section 061000 - Rough Carpentry: Wood blocking for support of wall-mounted equipment. Plywood used in conjunction with gypsum board for security ceiling.

1.03 REFERENCE STANDARDS

A. ASTM C475/C475M - Standard Specification for Joint Compound and Joint Tape for Finishing Gypsum Board; 2015.

B. ASTM C840 - Standard Specification for Application and Finishing of Gypsum Board; 2013.

C. ASTM C1047 - Standard Specification for Accessories For Gypsum Wallboard and Gypsum Veneer Base; 2014a.

1.04 SUBMITTALS

A. See Section 01 0100 for submittal procedures.

B. Product Data: Provide data on gypsum board, glass mat faced gypsum board, accessories, and joint finishing system.

C. Product Data: Provide manufacturer's data on partition head to structure connectors, showing compliance with requirements.

1.05 QUALITY ASSURANCE

A. Applicator Qualifications: Company specializing in performing gypsum board application and finishing, with minimum 5 years of documented experience.

PART 2 PRODUCTS

2.01 GYPSUM BOARD MATERIALS

A. Manufacturers:
   1. BPB America Inc: www.bpb-na.com.
   2. Continental Building Products www.continental-bp.com/#sle.
   3. G-P Gypsum Corporation: www.gp.com/gypsum.
   4. National Gypsum Company: www.nationalgypsum.com/#sle.
   5. USG: www.usg.com.
   6. Substitutions: See Section 016000 - Product Requirements.

B. Gypsum Wallboard: Paper-faced gypsum panels as defined in ASTM C1396/C1396M; sizes to minimize joints in place; ends square cut.
   1. Application: Use for vertical surfaces and ceilings, unless otherwise indicated.
   2. Thickness:
      a. Vertical Surfaces: 5/8 inch.
      b. Ceilings: 5/8 inch.

2.02 FIBERGLASS REINFORCED BOARD MATERIALS

A. Glass Mat Gypsum Board: Gypsum panels with moisture-resistant core and coated inorganic fiberglass mat back surface designed to resist growth of mold and mildew, per ASTM D 3273.
   1. Fiberglass Mat Surface Board: Comply with performance requirements of ASTM C 1396/C 1396M for water-resistant gypsum backing board; tapered long edges.
      a. Product: DensArmor Plus manufactured by Georgia Pacific.

Attachment: Exhibit B - Fire Station #96 Project Manual (2023-R-55 : Fire Station Construction)

b. Standard Type: Thickness 5/8 inch.
c. Locations: Install at interior side of all exterior walls, refer to drawings.

2.03 ACCESSORIES

A. Acoustic Sealant: Non-hardening, non-skinning, for use in conjunction with gypsum board.

B. Finishing Accessories: ASTM C1047, galvanized steel or rolled zinc, unless otherwise indicated.
1. Types: As detailed or required for finished appearance.
2. Special Shapes: In addition to conventional galvanized steel cornerbead and control joints, provide U-bead and L-bead at exposed panel edges.

C. Joint Materials: ASTM C475 and as recommended by gypsum board manufacturer for project conditions.
1. Tape: 2 inch wide, coated glass fiber tape for joints and corners, except as otherwise indicated.
2. Tape: 2 inch wide, creased paper tape for joints and corners, except as otherwise indicated.
3. Ready-mixed vinyl-based joint compound.
4. Chemical hardening type compound.

D. High Build Drywall Primer-Surfacer: Vinyl acrylic latex-based coating for spray application, designed to take the place of skim coating and separate paint primer in achieving Level 5 finish: Sheetrock Primer-Surfacer Tuff-Hide

E. Anchorage to Substrate: Tie wire, nails, screws, and other metal supports, of type and size to suit application; to rigidly secure materials in place.

PART 3 EXECUTION

3.01 EXAMINATION

A. Verify that project conditions are appropriate for work of this section to commence.

3.02 ACOUSTIC ACCESSORIES INSTALLATION

A. Acoustic Insulation: Place tightly within spaces, around cut openings, behind and around electrical and mechanical items within partitions, and tight to items passing through partitions.

B. Acoustic Sealant: Install in accordance with manufacturer's instructions.
1. Place two beads continuously on substrate before installation of perimeter framing members.
2. Place continuous bead at perimeter of each layer of gypsum board.
3. In non-fire-rated construction, seal around all penetrations by conduit, pipe, ducts, and rough-in boxes.

3.03 GYPSUM BOARD AND GLASS MAT FACED BOARD INSTALLATION

A. Comply with ASTM C 840 and manufacturer's instructions. Install to minimize butt end joints, especially in highly visible locations.

B. Single-Layer Non-Rated: Install gypsum board in most economical direction, with ends and edges occurring over firm bearing.

C. Installation on Wood Framing: Use screws for attachment of all gypsum board except face layer of non-rated double-layer assemblies, which may be installed by means of adhesive lamination.

3.04 INSTALLATION OF TRIM AND ACCESSORIES

A. Control Joints: Place control joints consistent with lines of building spaces and as indicated.
1. Not more than 30 feet apart on walls and ceilings over 50 feet long.

B. Corner Beads: Install at external corners, using longest practical lengths.

C. Edge Trim: Install at locations where gypsum board abuts dissimilar materials and as indicated.

Attachment: Exhibit B - Fire Station #96 Project Manual (2023-R-55 : Fire Station Construction)

3.05 JOINT TREATMENT

A. Glass Mat Faced Gypsum Board: Use fiberglass joint tape, bedded and finished with chemical hardening type joint compound.

B. Paper Faced Gypsum Board: Use paper joint tape, bedded with ready-mixed vinyl-based joint compound and finished with ready-mixed vinyl-based joint compound.

C. Finish gypsum board in scheduled areas in accordance with levels defined in ASTM C 840 and as scheduled below.

D. Tape, fill, and sand exposed joints, edges, and corners to produce smooth surface ready to receive finishes.
   1. Feather coats of joint compound so that camber is maximum 1/32 inch.
   2. Taping, filling and sanding is not required at base layer of double layer applications.

E. Where Level 5 finish is indicated, spray apply high build drywall surfacer over entire surface after joints have been properly treated; achieve a flat and tool mark-free finish.

F. Fill and finish joints and corners of cementitious backing board as recommended by manufacturer.

3.06 TOLERANCES

A. Maximum Variation of Finished Gypsum Board Surface from True Flatness: 1/8 inch in 10 feet in any direction.

3.07 FINISH LEVEL SCHEDULE

A. Level 1: Above finished ceilings concealed from view.

B. Level 2: Utility areas and areas behind cabinetry.

C. Level 5: Walls and ceilings scheduled to receive paint finish.

END OF SECTION

Attachment: Exhibit B - Fire Station #96 Project Manual (2023-R-55 : Fire Station Construction)

SECTION 092400
CEMENT PLASTER

PART 1 GENERAL

1.01 WORK INCLUDED

A. Lath and plastering.

1.02 REFERENCES

A. American Concrete Institute ACI 524R: Guide to Portland Cement Plastering

B. Portland Cement Association: Portland Cement Plaster (Stucco) Manual

C. ASTM C 150: Standard Specification for Portland Cement

D. ASTM C 847: Standard Specification for Metal Lath

E. Standard Specification for Aggregate for Job Mixed Portland Cement Based Plasters

F. ASTM C 926: Standard Specification for Application of Portland Cement-Based Plaster

G. ASTM C 933: Standard Specification for Welded Wire Lath

H. ASTM C 1063: Standard Specification for Installation of Lathing and Furring to Receive Interior and Exterior Portland Cement-Based Plaster

I. ASTM C 1328: Standard Specification for Plastic (Stucco) Cement

J. ASTM D 226: Standard Specification for Asphalt Saturated Organic Felt Used in Roofing and Waterproofing

K. ASTM D 4261: Standard Practice for Surface Cleaning Concrete Masonry Units for Coating

L. ASTM D 1784: Standard Specification for Rigid Poly (Vinyl Chloride) (PVC) Compounds and Chlorinated Poly (Vinyl Chloride) (CPVC) Compounds

M. ICC-ES AC11: Cementitious Exterior Wall Coatings

1.03 SUBMITTALS

A. Product Data: Submit manufacturer's product data for cementitious materials, lath, metal support components, and accessories.

B. Material Certificates: Submit producer's certificate for each kind of plaster aggregate indicated evidencing that materials comply with requirements.

C. Finish sample indicating color and texture for approval by architect/owner.

1.04 QUALITY ASSURANCE

A. Qualifications:
   1. Manufacturer: Shall be Dryvit Systems, Inc. or approved suppliers. All materials shall be obtained from Dryvit Systems, Inc. or its authorized distributors.
   2. Plastering Contractor:
      a. Shall be knowledgeable in the proper installation of exterior lathing and cement plaster products.
      b. Shall have qualified and properly trained people to perform work.
      c. Shall have experience in application of cement plaster products on projects of comparable scope.

1.05 DELIVERY, STORAGE AND HANDLING

A. All Commercial Cement Plaster 3 materials shall be delivered to the job site in the original, unopened packages with labels intact. Questionable materials shall not be used.

B. Materials shall be stored at the job site, and at all times, in a cool, dry location, out of direct sunlight, protected from weather and other sources of damage. Minimum storage temperature shall be as follows:
   1. DPR, PMR™, HDP™, Weatherlastic® and E™ Finishes, Color Prime™, Primus®, Genesis® and NCB™: 40 °F (4 °C).

Attachment: Exhibit B - Fire Station #96 Project Manual (2023-R-55 : Fire Station Construction)

C. For other products, refer to specific product data sheets.

D. Protect all products from weather and direct sunlight.

E. Maximum storage temperature shall not exceed 100 °F (38 °C). NOTE: Minimize exposure of materials to temperatures over 90 °F (32 °C). Finishes exposed to temperatures over 110 °F (43 °C) for even short periods may exhibit skinning, increased viscosity and should be inspected prior to use.

1.06 PROJECT CONDITIONS

A. Application of wet materials shall not take place during inclement weather unless appropriate protection is provided. Protect materials from inclement weather until they are dry.

B. Dryvit CCP Base shall not be applied when wall or ambient temperatures are below 40 °F (4 °C).

C. At the time of Dryvit product application, the air and wall surface temperatures shall be from 40 °F (4 °C) minimum to 100 °F (38 °C) maximum for the following products:
   1. DPR, PMR, HDP, Weatherlastic and E Finishes™, Color Prime, Primus, Genesis and NCB.
   2. For other products, refer to specific product data sheets.

D. These temperatures shall be maintained with adequate air ventilation and circulation for a minimum of 24 hours (48 hours for Weatherlastic Finishes, Ameristone, TerraNeo and Lymestone) thereafter, or until the products are completely dry. Refer to published product data sheets for more specific information.

E. CCP Base shall be completely dry and properly cured for a minimum of 7 days prior to primer application.

F. If necessary, tenting, heating and ventilation may be utilized to maintain required conditions. Heaters shall be vented to the outside.

G. Protect the Commercial Cement Plaster 3 materials from uneven and excessive evaporation in dry, warm, or windy weather. Always work the shady side of the wall. Refer to section 3.03.B and 3.03C for CCP Base curing requirements.

1.07 SEQUENCING AND SCHEDULING

A. A. Installation of the Commercial Cement Plaster 3 shall be coordinated with other construction trades.

1.08 WARRANTY

A. A. Dryvit Systems, Inc. shall provide a limited warranty against defective material upon written request. Dryvit shall make no other warranties, expressed or implied. Dryvit does not warrant workmanship. Full details are available from Dryvit Systems, Inc.

1.09 MAINTENANCE

A. All Dryvit products are designed to require minimal maintenance. However, as with all building products, depending on location, some cleaning and minimal maintenance may be required. See Dryvit publication DS152 on Cleaning and Recoating.

B. Sealants and flashings shall be inspected by the owner or their agent on a regular basis and repairs made as necessary to maintain a watertight building enclosure.

PART II - PRODUCTS

2.01 MANUFACTURER:

A. Basis of Design:
   1. All components of Commercial Cement Plaster 3 shall be obtained from Dryvit or its authorized distributors.
   2. Other equivalent products may be considered subject to Architect's approval prior to bid.

2.02 MATERIALS

A. Air/Water Resistive Barrier components:

Attachment: Exhibit B - Fire Station #96 Project Manual (2023-R-55 : Fire Station Construction)

1. Dryvit Backstop NT: A flexible, polymer-based non cementitious air and water resistive barrier coating
2. Dryvit Grid Tape™: An open weave fiberglass mesh tape with pressure sensitive adhesive available in rolls 4 in (102 mm) wide by 100 yds (91 m) long.

B. Paper Backed Metal Lath (by others):
1. Self-Furring Diamond Mesh metal lath shall be galvanized, minimum 2.5 lbs/sq yd (1.4 kg/m2) or 3.4 lbs/yd2 (1.9 kg/m2) and comply with ASTM C 847.

C. Accessories (by others).
1. All accessories to be PVC as manufactured by AMICO or equal.
2. Depth of accessories (grounds) shall be sized for the plaster thickness.
3. PVC accessories shall meet ASTM D 1784 and ASTM C 1063.

D. Plaster Base Coat:
1. Dryvit CCP Base - Concentrate: A fiberglass reinforced, cement plaster mix utilizing alkali resistant fibers and proprietary cementitious admixtures which is field mixed with clean, graded plaster sand meeting ASTM C 897, water and Dryvit AC-100 activator (when specified). CCP Base - Concentrate is packaged in 80 lb (36.3 kg) bags.

E. Primer:
1. Dryvit Color Prime™, Color Prime-W or Primer with Sand™: A water-based, pigmented acrylic primer applied over the cured CCP base coat to improve adhesion and provide a more uniform appearance of the finish.

F. Dryvit Finish: 100% acrylic finishes with integral color and texture. Shall be the type, color and texture as selected by the architect/owner and shall be of the following types:
1. Standard DPR (Dirt Pickup Resistance): Water-based, acrylic coating with integral color and texture and formulated with DPR chemistry (Provide samples of the following):
   a. Quarzputz® DPR: Open-texture
   b. Sandblast® DPR: Medium texture
   c. Freestyle® DPR: Fine texture
   d. Sandpebble® DPR: Pebble texture
   e. Sandpebble® Fine DPR: Fine pebble texture

PART III – EXECUTION

3.01 EXAMINATION

A. Prior to installation of Commercial Cement Plaster 3, it is the contractor's responsibility to ensure that:
1. The surfaces to receive plaster are free of dust, loose particles, oil and other conditions that would affect the adhesion, installation or performance of Commercial Cement Plaster 3 materials.
2. The lath is of the proper type, installed tight, properly fastened, and meets the requirements of ASTM C 1063, ASTM C 847 (expanded metal), ASTM C 933 (Welded Wire), or ASTM C 1032 (Woven Wire), and local building code requirements.
3. All accessories including corner aids, control and expansion joints, casing beads, etc. are properly fastened and positioned according to contract drawings and local building code requirements.
4. Doors, windows, decks, and other openings and penetrations have been properly flashed in accordance with building code and contract documents.
5. 5. Metal roof flashing has been installed in accordance with Asphalt Roofing Manufacturers Association (ARMA) Standards.
6. The substrate is flat within 1/4 in (6.4 mm) in 10 ft (3.0 m).
7. The contractor shall notify the general contractor and/or owner and/or architect of all discrepancies. Do not proceed until unsatisfactory conditions are resolved.

3.02 PREPARATION

A. Protection

Attachment: Exhibit B - Fire Station #96 Project Manual (2023-R-55 : Fire Station Construction)

1. The Commercial Cement Plaster 3 materials shall be protected by permanent or temporary means from weather and other damage prior to, during, and following application, until dry.
2. Solid surfaces such as precast or cast-in-place concrete or masonry, shall have adequate suction and surface roughness to provide bond. Smooth or non-absorptive surfaces shall be prepared by the following methods:
3. Sandblasting, wire brushing, acid etching, chipping or any combination thereof. Refer to ASTM D 4258, ASTM D 4259 ASTM D 4260, or ASTM D 4261 as applicable.
4. Application of an approved bonding agent.
5. Where effective bond cannot be achieved, the entire surface shall be covered with furred metal lath in accordance with ASTM C 1063 and building code requirements.

3.03 INSTALLATION

A. Mixing and Application Instructions – refer to the product literature for specific mixing and application instructions of each product.

B. CCP Base shall be moist cured for a minimum of 48 hours following application.

C. CCP Base shall be completely dry and cured for a minimum of 7 days prior to application of primer and finish.

3.04 FIELD QUALITY CONTROL

A. The lath and water-resistive barrier installation shall be inspected as required by the local building department prior to plaster materials being applied.

B. The contractor shall be responsible for the proper application of the Commercial Cement Plaster 3 materials.

C. Dryvit assumes no responsibility for on-site inspections or application of its products

A. All surrounding areas, where the Dryvit Commercial Cement Plaster 3 has been applied, shall be left free of debris and foreign substances resulting from the contractor's work.

3.05 PROTECTION

A. The Commercial Cement Plaster 3 materials shall be protected from weather and other damage until permanent protection in the form of flashings, sealants, etc. are installed.

END OF SECTION

Attachment: Exhibit B - Fire Station #96 Project Manual (2023-R-55 : Fire Station Construction)

SECTION 093000
TILE

PART 1 - GENERAL

1.01 RELATED DOCUMENTS

A. Drawings and general provisions of Contract, including General and Supplementary Conditions and Division-1 Specification Sections, apply to this Section.

1.02 REFERENCES

A. ANSI Tile Standards: Comply with ANSI A13.1 Standard Specification for Ceramic Tile and ANSI 108 series of tile installation standards included under "American National Standard Specifications for the Installation of Ceramic Tile."

B. TCNA Installation Guidelines: TCNA "Handbook for Ceramic Tile Installation"; comply with TCNA installation methods indicated.

C. Submittals: With manufacturer's product data and installation instructions for tile work, submit samples of each type, color, and texture of tile mounted on 12-inch-square backing with joints grouted.

PART 2 - PRODUCTS

2.01 COLORS, TEXTURES, AND PATTERNS

A. Provide selections made by Architect from manufacturer's full range of standard colors, textures, and patterns for products of type indicated.

B. Sizes and Thicknesses: As indicated or, if not indicated, as selected by Architect from manufacturer's standard sizes and thicknesses.

C. Tile Grade: "Standard Grade" unless otherwise indicated.

D. Glazed Ceramic Floor Tile as follows:
   1. Dal-Tile Keystones 2" x 2" mosaics. Use for floors where scheduled.

E. Glazed Ceramic Wall Tile as follows:
   1. Dal-Tile Semi Gloss 6" x 6". Use for walls where scheduled.

F. Trim Shapes: Same material, size, color, and texture as field tile.

G. Thresholds: Schluter Schiene, height as required, A 60 Aluminum

H. Setting Materials: Provide setting materials as follows:
   1. Portland Cement Mortar: Materials complying with ANSI A 108.1 and as follows:
      a. Cleavage Membrane: Asphalt felt,ASTM D 226, Type I (NO. 15); or polyethylene sheeting ASTM D 4397, 4.0 mils thick.
      b. Reinforcing Wire Fabric: Galvanized welded wire fabric, 2 inches by 2 inches - WO.3 by WO.3 (16 ASW gage or 0.0625-inch diameter); comply with ASTM A 185 and ASTM A 82 except for minimum wire size.
      c. Latex additive (water emulsion) as follows, replacing part or all of gauging water, specifically recommended by latex additive manufacturer for use with job-mixed portland cement and aggregate mortar bed.
         1) Manufacturer's standard.
   2. Dry-Set Portland Cement Mortar: ANSI A118.1.
   3. Latex-Portland Cement Mortar: ANSI A118.4.

I. Grouting Materials: Provide grouting materials as follows:
   1. Commercial Portland Cement Grout: ANSI A118.6.
   2. Dry-Set Grout: ANSI A118.6.
   3. Latex-Portland Cement Grout: ANSI A118.6.
   4. All floor tile to receive epoxy grout, Kerapoxy or equal

Attachment: Exhibit B - Fire Station #96 Project Manual (2023-R-55 : Fire Station Construction)

J. Elastomeric Sealants: Manufacturer's standard chemically curing, elastomeric sealants of base polymer indicated that comply with requirements of Division 7 Section "Joint Sealers" including ASTM C 920 as referenced by Type, Grade, Class, and Uses.

PART 3 - EXECUTION

3.01 INSTALLATION

A. Comply with ANSI A108.1 and 108.4 through A108.10, as applicable for type of tile, setting materials, grout, and methods of installation indicated. Comply with manufacturer's instructions for application of proprietary materials. Comply with TCNA installation methods indicated below.
   1. Floor Installation Methods:
      a. Over interior concrete substrates, install in accordance with TCNA Handbook Method F-113, dry-set or latex-portland cement bond coat, with standard grout, unless otherwise indicated.
   2. Wall Installation Method:
      a. Over masonry walls, install in accordance with TCNA Handbook, Method W-211, mortar bed, bond coat, with standard grout, unless otherwise indicated.

B. Joint Pattern: Use 1/4" for all tile.

C. Expansion, Control, Contraction, and Isolation Joints: As indicated.

D. Seal tile joints with elastomeric sealants to comply with Division 7 Section "Joint Sealers."

E. Marble Thresholds: Install marble thresholds at locations indicated; set in same type setting bed as abutting field tile unless otherwise indicated.

F. Set thresholds in latex-portland cement mortar for locations where mortar bed would otherwise be exposed above adjacent non-tile floor finish.

3.02 CLEANING

A. Upon completion of placement and grouting, clean all ceramic tile surfaces so they are free of foreign matter.

B. Remove latex-portland cement grout residue from tile as soon as possible.

C. Unglazed tile may be cleaned with acid solutions only when permitted by tile and grout manufacturer's printed instructions but no sooner than 14 days after installation. Protect metal surfaces, cast iron, and vitreous plumbing fixtures from effects of acid cleaning. Flush surface with clean water before and after cleaning.

END OF SECTION

Attachment: Exhibit B - Fire Station #96 Project Manual (2023-R-55 : Fire Station Construction)

SECTION 095100
ACOUSTICAL CEILINGS

PART 1 - GENERAL

1.01 RELATED DOCUMENTS:

A. Drawings and general provisions of Contract, including General and Supplementary Conditions and Division-1 Specification sections, apply to work of this section.

1.02 SUMMARY:

A. Extent of each type of acoustical ceiling is shown and scheduled on drawings.

B. Type of acoustical ceiling specified in this section is Acoustical panels, exposed suspension.

1.03 SUBMITTALS:

A. Product Data: Submit manufacturer's technical data for each type of acoustical ceiling unit and suspension system required.

B. Samples : Submit manufacturers' standard size samples of acoustical units, but not less than 12" square, and of exposed ceiling suspension members including wall and special moldings. Provide samples showing full range of colors, textures and patterns available for each type of component required.

C. Certificates: Submit certificates from manufacturers of acoustical ceiling units and suspension systems attesting that their products comply with specification requirements.

1.04 QUALITY ASSURANCE:

A. Fire Performance Characteristics: Provide acoustical ceiling components that are identical to those tested for the following fire performance characteristics, according to ASTM test method indicated, by UL or other testing and inspecting agency acceptable to authorities having jurisdiction. Identify acoustical ceiling components with appropriate marking of applicable testing and inspecting agency.
   1. Surface Burning Characteristics: Class A, as follows, tested per ASTM E 84:
      a. Flame Spread: 25 or less.
      b. Smoke Developed: 450 or less.

B. Provide materials and installation in conformance to FBC 2001 § 804 criteria.

C. Coordination of Work: Coordinate layout and installation of acoustical ceiling units and suspension system components with other work supported by, or penetrating through, ceilings, including light fixtures, HVAC equipment, fire-suppression system components (if any), and partition system (if any).

1.05 DELIVERY, STORAGE AND HANDLING:

A. Deliver acoustical ceiling units to project site in original, unopened packages and store them in a fully enclosed space where they will be protected against damage from moisture, direct sunlight, surface contamination or other causes.

B. Before installing acoustical ceiling units, permit them to reach room temperature and a stabilized moisture content.

C. Handle acoustical ceiling units carefully to avoid chipping edges or damaging units in any way.

1.06 PROJECT CONDITIONS:

A. Space Enclosure: Do not install interior acoustical ceilings until space is enclosed and weatherproof, wet-work in space is completed and nominally dry, work above ceilings is complete, and ambient conditions of temperature and humidity will be continuously maintained at values near those indicated for final occupancy.

1.07 EXTRA MATERIALS:

A. Deliver extra materials to Owner. Furnish extra materials described below matching products installed, packaged with protective covering for storage and identified with appropriate labels.
   1. Acoustical Ceiling Units: Furnish two cartons

Attachment: Exhibit B - Fire Station #96 Project Manual (2023-R-55 : Fire Station Construction)

PART 2 - PRODUCTS

2.01 ACOUSTICAL CEILING UNITS:

A. ACT USG Radar High-NRC/High-CAC 22421, 24" x 24" x 7/8", Square Edge, NRC .70, CAC 35, Flame Spread 0-25, (ASTM-E-84), Class A (Fed. Spec.SS-S-118B) to be used where indicated on finish schedule.

2.02 METAL SUSPENSION SYSTEMS, GENERAL:

A. Standard for Metal Suspension Systems: Provide metal suspension systems of type, structural classification and finish indicated which comply with applicable ASTM C 635 requirements.

B. Finishes and Colors: Provide manufacturer's standard factory- applied finish for type of system indicated. For exposed suspension members and accessories with painted finish, provide color indicated or, if not otherwise indicated, as selected by Architect from manufacturer's full range of standard colors.

C. Attachment Devices: Size for 5 x design load indicated in ASTM C 635, Table 1, Direct Hung.

D. Hanger Wire: Galvanized carbon steel wire, ASTM A 641, soft temper, prestretched, Class 1 coating, sized so that stress at 3- times hanger design load (ASTM C 635, Table 1, Direct Hung), will be less than yield stress of wire, but provide not less than 12 gage.

E. Edge Moldings and Trim: Manufacturer's standard molding for edges and penetrations of ceiling which fits with type of edge detail and suspension system indicated.

2.03 EXPOSED METAL DIRECT-HUNG SUSPENSION SYSTEM:

A. Non-Fire-Resistance-Rated Double Web Steel Suspension System: All main beams and cross tees shall be commercial quality hot dipped galvanized steel with minimum G30 coating per ASTM A653. Main beams and cross tees are double-web steel construction with 15/16" wide exposed flange; other characteristics as follows:

B. Structural Classification: Intermediate Duty System.

C. Finish: Painted, flat white.

D. Manufacturers: Subject to compliance with requirements, provide products of one of the following:
   1. Basis of Design:
      a. USG Donn Brand Centricitee DXT24.
      b. USG Donn Brand Centricitee DXT222 & DXT424 Cross Tee.
      c. USG Donn Brand Centricitee M9 Wall Angle.
      d. USG Donn Brand DX/DXL 15/16" white grid at vinyl rock ceiling tile locations.

E. Other approved manufacturers:
   1. Chicago Metallic Corp.
   2. Armstrong World Industries, Inc.

PART 3 - EXECUTION

3.01 PREPARATION:

A. Coordination: Furnish layouts for inserts, clips, or other supports required to be installed by other trades for support of acoustical ceilings.

B. Measure each ceiling area and establish layout of acoustical units to balance border widths at opposite edges of each ceiling. Avoid use of less-than-half width units at borders, and comply with reflected ceiling plans wherever possible.

3.02 INSTALLATION:

A. General: Install materials in accordance with manufacturer's printed instructions, and to comply with governing regulations, fireresistance rating requirements as indicated, and CISCA standards applicable to work.

B. Arrange acoustical units and orient directionally-patterned units (if any) in manner shown by reflected ceiling plans.

Attachment: Exhibit B - Fire Station #96 Project Manual (2023-R-55 : Fire Station Construction)

1. Install tile with pattern running in one direction.
2. Install tile with pattern running in alternating directions to form "checkerboard" layout.

C. Install suspension systems to comply with ASTM C 636, with hangers supported only from building structural members. Locate hangers not less than 6" from each end and spaced 4'-0" along each carrying channel or direct-hung runner, unless otherwise indicated, leveling to tolerance of 1/8" in 12'-0".

D. Secure wire hangers by looping and wire-tying, either directly to structures or to inserts, eye-screws, or other devices which are secure and appropriate for substrate, and which will not deteriorate or fail with age or elevated temperatures.

E. Install hangers plumb and free from contact with insulation or other objects within ceiling plenum which are not part of supporting structural or ceiling suspension system. Splay hangers only where required to miss obstructions and offset resulting horizontal force by bracing, countersplaying or other equally effective means.

F. Install edge moldings of type indicated at perimeter of acoustical ceiling area and at locations where necessary to conceal edges of acoustical units.

G. Sealant Bed: Apply continuous ribbon of acoustical sealant, concealed on back of vertical leg before installing moldings.

H. Screw-attach moldings to substrate at intervals not over 16" o.c. and not more than 3" from ends, leveling with ceiling suspension system to tolerance of 1/8" in 12'-0". Miter corners accurately and connect securely.

I. Install acoustical panels in coordination with suspension system, with edges concealed by support of suspension members. Scribe panels to fit accurately at borders and at penetrations.

3.03 CLEANING:

A. Clean exposed surfaces of acoustical ceilings, including trim, edge moldings, and suspension members; comply with manufacturer's instructions for cleaning and touch-up of minor finish damage. Remove and replace work which cannot be successfully cleaned and repaired to permanently eliminate evidence of damage.

END OF SECTION

Attachment: Exhibit B - Fire Station #96 Project Manual (2023-R-55 : Fire Station Construction)

SECTION 096519
LUXURY VINYL TILE FLOORING

PART 1 GENERAL

1.01 SECTION INCLUDES

A. High Performance Luxury Vinyl Tile.

B. Installation accessories:
   1. Adhesives.

1.02 RELATED REQUIREMENTS

A. Section 016116 - Volatile Organic Compound (VOC) Content Restrictions: SCS FloorScore certification documentation.

1.03 REFERENCE STANDARDS

A. ASTM D2047 - Standard Test Method for Static Coefficient of Friction of Polish-Coated Flooring Surfaces as Measured by the James Machine; 2011.

B. ASTM D4060 - Standard Test Method for Abrasion Resistance of Organic Coatings by the Taber Abraser; 2014.

C. ASTM F137 - Standard Test Method for Flexibility of Resilient Flooring Materials with Cylindrical Mandrel Apparatus; 2008 (Reapproved 2013).

D. ASTM F386 - Standard Test Method for Thickness of Resilient Flooring Materials Having Flat Surfaces; 2017.

E. ASTM F710 - Standard Practice for Preparing Concrete Floors to Receive Resilient Flooring; 2011.

F. ASTM F1700 - Standard Specification for Solid Vinyl Tile; 2013a.

G. ASTM F1869 - Standard Test Method for Measuring Moisture Vapor Emission Rate of Concrete Subfloor Using Anhydrous Calcium Chloride; 2016a.

H. ASTM F2170 - Standard Test Method for Determining Relative Humidity in Concrete Floor Slabs Using in situ Probes; 2017.

I. NFPA 253 - Standard Method of Test for Critical Radiant Flux of Floor Covering Systems Using a Radiant Heat Energy Source; 2015.

1.04 SUBMITTALS

A. See Section 013000 - Administrative Requirements, for submittal procedures.

B. Manufacturer's documentation for flooring and accessories:
   1. Technical Data.
   2. Installation and Maintenance.
   3. Warranty.
   4. Safety Data Sheets (SDS) for accessories.

C. Selection Samples: Submit manufacturer's complete set of color samples for Hall & Ogle Architects, Inc.'s initial selection.

1.05 DELIVERY, STORAGE, AND HANDLING

A. Upon receipt, immediately remove any shrink-wrap and check materials for damage and that the material is of the correct style, color, quantity and run number(s).

B. Store all materials flat and off of the floor in an acclimatized, weather-tight space between 65 to 85 degrees F.

C. Do not double stack pallets.

Attachment: Exhibit B - Fire Station #96 Project Manual (2023-R-55 : Fire Station Construction)

1.06 FIELD CONDITIONS

A. Acclimate material at jobsite between 65 to 85 degrees F and 35 percent to 85 percent relative humidity for 48 hours prior to installation. Temperature and relative humidity should also be maintained at the same levels during installation, and after installation.

B. Spread unopened cartons no more than 6 cartons high and at least 4 inches apart.

C. Keep away from heating and cooling ducts and direct sunlight.

D. If permanent HVAC is not operational, temporary means should be used to maintain the recommended temperature and relative humidity levels.

E. Close areas to traffic during installation of flooring and accessories.

1.07 QUALITY ASSURANCE

A. Manufacturer Qualifications: Company specializing in manufacturing products specified in this section, with not less than ten years of documented experience.

B. Installer Qualifications: Flooring should only be installed by professional flooring mechanics that have demonstrated successful installations of jobs in similar size and scope.

PART 2 PRODUCTS

2.01 MANUFACTURERS

A. Basis of Design: Milliken Change Agent Relic; High Performance Luxury Vinyl Tile: www.milliken.com.

B. Substitutions: See Section 016000 - Product Requirements.

2.02 HIGH PERFORMANCE LUXURY VINYL TILE

A. Provide all colors of Relic Collection for selection by owner. Size of tiles to be 25 cm x 100 cm.

2.03 ACCESSORIES

A. Adhesives:
   1. 1. Acrylic Adhesive: For dry areas with no spillage, use adhesive as recommended by manufacturer.

PART 3 EXECUTION

3.01 EXAMINATION .

A. Install flooring and accessories after other operations (including painting) have been completed.

B. Acceptance of Conditions: Carefully examine all installation areas with installer/applicator present, for compliance with requirements affecting work performance.
   1. Verify that field measurements, product, adhesives, substrates, surfaces, structural support, tolerances, levelness, temperature, humidity, moisture content level, pH, cleanliness and other conditions are as required by the manufacturer, and ready to receive work.

C. Verify that substrate is contaminant-free, including old adhesives and abatement chemicals.

D. Test substrates as required by manufacturer to verify proper conditions exist.
   1. Concrete:
      a. Check for concrete additives such as fly ash, curing compounds, hardeners, or other surface treatments that may prevent proper bonding of floor coverings.
      b. Moisture testing: Perform either the In-Situ Relative Humidity (RH) test (ASTM F2170) or Moisture Vapor Emission Rate (MVER) test (ASTM F1869). Refer to the Manufacturer's Installation Guide/Manual for the maximum allowable substrate moisture content. Substrates above the maximum allowable moisture content will require a moisture mitigation system.
      c. Perform alkalinity testing per ASTM F710 to verify pH level is between 7 to 10.
      d. Check substrate for absorbency per manufacturer's recommendations.
      e. Perform bond testing per ASTM F710 to determine compatibility of adhesive to concrete substrate.

Attachment: Exhibit B - Fire Station #96 Project Manual (2023-R-55 : Fire Station Construction)

2. Wood:
   a. Shall be dry, clean, structurally sound and installed per underlayment manufacturer's installation instructions.
   b. Test wood subfloors and underlayment panels using a suitable wood moisture pin-meter. Readings between the subfloor and underlayment panels should be within 3 percent prior to installing the underlayment panels.
   c. The maximum moisture content is 14 percent.
   d. Proceed with installation only after satisfactory conditions have been met.

E. Verify that required floor-mounted utilities are in correct location.

3.02 PREPARATION

A. Luxury Vinyl Tile flooring shall be installed over subfloors conforming to ASTM F710 for concrete and other monolithic floors or ASTM F1482 for wood subfloors.

B. Moisture Testing: Moisture emissions from concrete subfloors must not exceed 5 lbs per 1000sf per 24 hours (2.25 kg H2O/24 hr/93 m2) via the Calcium Chloride Test Method (ASTM F1869) and not to exceed 85% internal concrete relative humidity as tested in accordance with ASTM F2170-02. If subfloor moisture exceeds the allowable maximum for installing Luxury Vinyl Tile, please call your local distributor for advice.

C. Wood subfloors shall not exceed 10% moisture content when measured with a Delmhorst Wood Moisture Tester.

D. The pH level of the subfloor surface shall not be higher than 9.9. If higher, subfloor must be neutralized.

E. Underlayment and Patching Compounds: Use only gray colored Portland cement based underlayments; patching compounds are used for filling cracks, holes and leveling. White gypsum materials are not acceptable.

3.03 INSTALLATION

A. Luxury Vinyl Tile Installation: Install tile in accordance with the current published Installation Guide. Failure to install tile in accordance with recommended procedures will void the Limited Product Warranty.

3.04 FIELD QUALTITY CONTROL

A. Site tests and inspections per Section 014000 and as follows:
   1. Inspect flooring installation for non-conforming work including (but not limited to) the following:
      a. Lack of adhesion.
      b. Bubbles, loose tiles or raised edges.
      c. Dirt and debris underneath flooring.
      d. Excessive gaps.
      e. Improper substrate preparation (as indicated by telegraphing).
      f. Damage to tiles, including: dents/indentations, cuts, cracks, burns or punctures.

B. Non-conforming work per General Conditions and as follows:
   1. Repair or replace damaged material if not acceptable to the Hall & Ogle Architects, Inc..

3.05 CLEANING

A. Provide progress cleaning per manufacturer's written instructions, Section 017000, and as follows:
   1. Work Areas: Clean areas where work is in progress to the level of cleanliness necessary for proper execution of the work.
      a. Clean and protect completed construction until Date of Substantial Completion.
      b. During installation, remove wet adhesive from surface of flooring per manufacturer's instructions.
   2. Site: Maintain project site free of waste materials and debris.

Attachment: Exhibit B - Fire Station #96 Project Manual (2023-R-55 : Fire Station Construction)

B. Provide final cleaning immediately prior to Date of Substantial Completion inspection per manufacturer's written instructions and Section 017000.
   1. Protection: Remove manufacturer's and other installed protection immediately prior to Date of Substantial Completion inspection, unless required otherwise.
   2. Clean floor with a neutral 6-8 pH cleaner.

3.06 MAINTENANCE

A. Initial maintenance per flooring manufacturer's written instructions and as follows:
   1. Allow the adhesive to cure for at least 48 hours prior to wet cleaning the floor.
   2. Sweep, dust mop or vacuum the floor thoroughly to remove all loose dirt, dust, grit and debris. Do not use vacuums with a beater bar assembly.
   3. Remove any dried adhesive residue from the surface with mineral spirits applied to a clean, lint-free cloth.
   4. Damp mop the floor using a cleaner recommended by the flooring manufacturer.
   5. If necessary, scrub the floor using an auto scrubber or rotary machine (300 rpm or less) with a cleaner recommended by the flooring manufacturer. Maintain the proper dilution ratio and use the appropriate scrubbing brush or pad.
   6. Thoroughly rinse the entire floor with fresh, clean water. Remove the dirty residue with a wet-vacuum or clean mop and allow the floor to dry completely.

3.07 PROTECTION

A. Protect materials from construction operations until Date of Substantial Completion or Owner occupancy, whichever occurs first.
   1. Protect finished floor from abuse and damage by using heavy non-staining kraft paper, drop cloths or equivalent. Use additional, non-damaging protective materials as needed.
   2. Light foot traffic on a newly installed floor can be permitted after 24 hours.
   3. Keep heavy traffic and rolling loads off the newly installed LVT flooring for 48 hours.
   4. Protect the floor from rolling loads by covering with protective boards.

END OF SECTION

Attachment: Exhibit B - Fire Station #96 Project Manual (2023-R-55 : Fire Station Construction)

SECTION 096566
RUBBER ATHLETIC FLOORING

PART 1 GENERAL

1.01 SECTION INCLUDES

A. Rubber sheet flooring, adhesively installed.

B. Accessories.

1.02 SUBMITTALS

A. See Section 013000 - Submittals, for submittal procedures.

B. Product Data: Manufacturer's printed data sheets for products specified.

C. Shop Drawings: Fabrication and installation details, layout, product components and accessories.

D. Selection Samples: Manufacturer's color charts for flooring materials specified , indicating full range of colors and textures available.

1.03 QUALITY ASSURANCE

A. Installer Qualifications: An experienced installer certified in writing by the flooring manufacturer to be qualified for installation of specified flooring system.

1.04 DELIVERY, STORAGE, AND HANDLING

A. Deliver materials to project site in unopened containers clearly labeled with manufacturer's name and identification of contents.

B. Store materials in dry and clean location until needed for installation. During installation, handle in a manner that will prevent marring and soiling of finished surfaces.

1.05 WARRANTY

A. Project Warranty: Refer to Conditions of the Contract for project warranty provisions.

B. Manufacturer's Warranty: Submit, for Owner's acceptance, manufacturer's standard warranty document executed by authorized company official. Manufacturer's warranty is in addition to and not a limitation of, other rights Owner may have under Contract Documents.

1. Warranty Period: Three (3) years minimum commencing in Date of Substantial Completion.

PART 2 PRODUCTS

2.01 MANUFACTURERS:

A. Manufacturer: Basis of Design: Pawling Corporation, Standard Products Division, 32 Nelson Hill Road, P.O. Box 200, Wassaic, NY 12592

2.02 ATHLETIC FLOORING:

A. Modular Floor System: Pawling Protect-O-Pad P-80, heavy duty premium-grade recycled rubber modular floor system, 4' x 4' x 1/2" interlocking matts, black color. Provide units with beveled edge at transition to Apparatus Bay.

PART 3 EXECUTION

3.01 EXAMINATION

A. Examine substrates for conditions detrimental to installation of athletic flooring. Proceed with installation only after unsatisfactory conditions have been corrected.

B. Verify that surfaces are flat to tolerances acceptable to flooring manufacturer, free of cracks that might telegraph through flooring, clean, dry, and free of curing compounds, surface hardeners, and other chemicals that might interfere with bonding of athletic flooring to substrate.

C. Concrete: Verify that slab substrates are acceptable for installation of resilient flooring, in accordance with ASTM F 710. Verify that surfaces are flat to tolerances acceptable to flooring manufacturer, free of cracks that might telegraph through flooring, clean, dry, and free of curing

Attachment: Exhibit B - Fire Station #96 Project Manual (2023-R-55 : Fire Station Construction)

compounds, surface hardeners, and other chemicals that might interfere with bonding of athletic flooring to substrate.

3.02 PREPARATION

A. Concrete: Use leveling compound as necessary to achieve substrate flatness of plus or minus 1/8 inch within 10 ft radius.

B. Remove coatings that are incompatible with flooring adhesives, using methods recommended by flooring manufacturer.

C. Broom clean areas to receive athletic flooring immediately before beginning installation.

3.03 INSTALLATION

A. Starting installation constitutes acceptance of sub-floor conditions.

B. Comply with manufacturer's recommendations and approved shop drawings.

3.04 PROTECTION

A. Protect finished athletic flooring from construction traffic to insure that it is without damage upon completion of the work.

END OF SECTION

Attachment: Exhibit B - Fire Station #96 Project Manual (2023-R-55 : Fire Station Construction)

SECTION 096750
FLUID APPLIED FLOORING

PART 1 - GENERAL

1.01 RELATED DOCUMENTS

A. Drawings and general provisions of the Contract, including General and Supplementary Conditions and Division 1 Specification Sections, apply to this Section.

1.02 SUMMARY

A. This Section includes fluid-applied flooring systems in areas scheduled, including required and / or necessary surface preparation, and application of primer, aggregate, and intermediate and finish system coats. Types of fluid-applied flooring systems include the following:
   1. Seamless epoxy broadcast flooring system 1/8” thick direct applied to concrete substrate.

1.03 SUBMITTALS

A. General: Submit the following according to Conditions of the Contract and Division 1 Specification Sections.
   1. Product data:
   2. Provide the manufacturer's technical information, including label analysis and instructions for handling, storing, and applying each material proposed for use.
   3. List each material and the specific finish system and application. Identify each material by the manufacturer's catalog number and general classification.
   4. Material Safety Data Sheets (MSDS) for each separate system component for which health and safety informational material is required by law or regulation to be published.
   5. Samples for initial finished surface color selection in the form of manufacturer's color charts.
   6. Samples for Verification Purposes: Provide samples of each color and material to be applied with texture to simulate actual conditions on representative samples of the actual substrate.
   7. Prepare a test patch at the job site for approval of texture and color to be used as the job standard.

1.04 QUALITY ASSURANCE

A. Applicator Qualifications: Engage an experienced applicator, who may be approved and certified by the manufacturer, and who has successfully completed at least five epoxy flooring system applications similar in material and extent to those indicated for the Project, in each of the preceding three years.

B. Single-Source Responsibility: Provide primers and compatible undercoat material and broadcast material either produced by, or recommended for use by, the same manufacturer as the finish coats for each type of coating.

1.05 DELIVERY, STORAGE, AND HANDLING

A. Deliver materials to the job site in the manufacturer's original, new, unopened packages, and containers bearing manufacturer's name and label.

B. Store materials in a dry, enclosed area protected from the elements, as recommended by the manufacturer. Ensure that ambient environmental conditions within the storage area can be kept within the manufacturer's range of temperature and humidity.

1.06 WARRANTY

A. Submit a one year warranty against defects in material and workmanship, upon substantial completion.

Attachment: Exhibit B - Fire Station #96 Project Manual (2023-R-55 : Fire Station Construction)

PART 2 - PRODUCTS

2.01 MANUFACTURERS:

A. Subject to compliance with requirements, manufacturers offering epoxy flooring products/systems which may be incorporated into the Work include, but are not necessarily limited to, the following:
   1. Dur-O-Quartz, Dur-O-Flex, Inc.
   2. Eucopoxy Tufcoat DBS, Euclid Chemical Co.
   3. Quartzite 6000, Valspar Corp.
   4. Floroquartz System, Florock
   5. Plexiquartz System, Plexi-Chemie, Inc.
   6. Stratashield, Tnemec Company, Inc.

2.02 MINIMUM PHYSICAL PROPERTIES OF FLUID-APPLIED FLOORING FINISH

PHYSICAL PROPERTY	TEST	RESULT
PENCIL HARDNESS	ASTM D-3363	HB
BOND STRENGTH TO CONC.	ASTM D-4541	865 PSI
IMPACT RESISTANCE	ASTM D-2794	58 IN./LBS.
DRY HEAT RESISTANCE	ASTM D-2485	180 DEG. F
ABRASION RESISTANCE (CS17 WHEEL 1 KG. LOAD 1000 CYCLES)	ASTM D-4060	64.8 MG. LOSS
FLEXIBILITY (STEEL, 180 DEG. BEND, 1/8" MANDREL)	ASTM D-522	PASSES
COEFFICIENT OF FRICTION (STANDARD SLIP-RESISTANCE)	ASTM C-1028	.60 (PASSES WET AND DRY)

PART 3 - EXECUTION

3.01 EXAMINATION AND TESTING

A. Examine substrates and conditions under which coatings will be applied for compliance with requirements on applying coatings. Surfaces to receive coatings must be thoroughly dry before coatings are applied.
   1. Do not proceed with coating application until unsatisfactory conditions have been corrected. Start of application will be construed as the Applicator's acceptance of surfaces within that particular area.

B. Test concrete slab and / or bedding substrate for moisture using ASTM F1869 “Standard Test Method for Measuring Moisture Vapor Emission Rate of Concrete Subfloor Using Anhydrous Calcium Chloride” or other approved means. Where test results indicate values not acceptable to finish flooring manufacturer, provide and install the following moisture vapor barrier system at no additional cost to the Owner:
   1. VAP 1 PH, Koester American Corp. or equal approved product.

C. Where vapor barrier system may be required, finish flooring manufacturer shall furnish certification indicating suitability of barrier system product as a substrate material, together with manufacturers' instructions and recommendations regarding preparation and installation.

3.02 PREPARATION

A. General: Surface preparation of concrete slab as substrate or of moisture barrier as substrate. shall be performed in strict accord with written specifications of manufacturer of applied coating system coming into direct contact with substrate.

Attachment: Exhibit B - Fire Station #96 Project Manual (2023-R-55 : Fire Station Construction)

B. Concrete Surface Preparation: Clean and prepare concrete surfaces to be coated according to the manufacturer's instructions for bare concrete floor slabs. Refer to SSPC-SP13/NACE 6. Minimum concrete substrate cure is 28 days at 75 deg. F.
   1. Create a surface profile with a steel blast machine and diamond grinders for edges.
   2. Rinse thoroughly to achieve a final pH between 6.0 and 10.0.
   3. Verify that surface is dry and perfectly clean, free of all oil, grease, detergent film, sealers and/or curing compounds, suitably profiled, and within acceptable pH range.

3.03 DETAILS

A. Thoroughly rout and vacuum moving cracks and joints, then fill with manufacturer's self-leveling filler.

B. Pre-patch non-moving surface deviations with patching compound comprised of 100% solids epoxy and aggregate.

C. Key in" all drains, edges and transition points according to manufacturers instructions.

D. Install integral cove base at perimeter wall, as shown and where scheduled.

3.04 FLUID-APPLIED FLOORING INSTALLATION

A. Adhere strictly to manufacturer's current written instructions and recommended spreading rates per coat.

B. Apply prime color coat of product and allow to cure.

C. Apply second color coat of product and apply aggregate before allowing to cure.

D. Broadcast application of non-skid aggregate to excess into wet color coat. Allow to cure.

E. Sweep up excess aggregate.

F. Repeat above application steps as required by manufacturer to attain recommended dry coat thickness for intended use of room areas being coated.

G. Apply final topcoat of epoxy.

3.05 CLEANING

A. Cleanup: At the end of each work day, remove rubbish, empty cans, rags, and other discarded materials from the site. After completing work, clean spattered surfaces. Do not scratch or damage adjacent finished surfaces.

3.06 PROTECTION

A. Protect work of other trades against damage from seamless flooring operation. Correct damage by cleaning, repairing, replacing, and recoating, as acceptable to the Architect. Leave in an undamaged condition.

B. At completion of other trade's construction activities, touch up and restore damaged or defaced flooring surfaces.

END OF SECTION

Attachment: Exhibit B - Fire Station #96 Project Manual (2023-R-55 : Fire Station Construction)

SECTION 096813
TILE CARPETING

PART 1 GENERAL

1.01 SECTION INCLUDES

A. Carpet tile, fully adhered.

1.02 REFERENCE STANDARDS

1.03 SUBMITTALS

A. See Section 013000 - Administrative Requirements, for submittal procedures.

B. Product Data: Provide data on specified products, describing physical and performance characteristics; sizes, patterns, colors available, and method of installation.

C. Samples: Submit two carpet tiles illustrating color and pattern design for each carpet color selected.

D. Manufacturer's Installation Instructions: Indicate special procedures.

E. Maintenance Data: Include maintenance procedures, recommended maintenance materials, and suggested schedule for cleaning.

F. Maintenance Materials: Furnish the following for City of Holly Hill's use in maintenance of project.
   1. See Section 016000 - Product Requirements, for additional provisions.
   2. Extra Carpet Tiles: Quantity equal to 5 percent of total installed of each color and pattern installed.

1.04 QUALITY ASSURANCE

A. Manufacturer Qualifications: Company specializing in manufacturing specified carpet tile with minimum three years documented experience.

B. Installer Qualifications: Company specializing in installing carpet tile with minimum three years documented experience and approved by carpet tile manufacturer.

C. Flooring contractor to provide owner a written warranty that guarantees the completed installation to be free from defects in materials and workmanship for a period of no less than two (2) years after job completion.

D. All warranties must be issued by the manufacturer as standard published warranties on all types of carpet within this document. Second source warranties that involve parties other than the carpet manufacturer are unacceptable. If the product fails to perform as warranted when installed according to the J+J Flooring Group carpet installation handbook and maintained according to J+J Flooring Group maintenance instructions, the affected area will be repaired or replaced at the expense of the manufacturer. The carpet manufacturer will provide standard published written performance warranties for the following:
   1. Lifetime warranty against excessive surface wear. Excessive wear means no more than 10% loss of pile fiber weight measured before and after use as tested under ASTM D-3936.
   2. Lifetime static protection, meaning built-in protection below 3.0 kv as tested under AATCC-134.
   3. Tuft Bind (edge ravel, yarn pulls, zippering)
   4. Delamination.
   5. Lifetime Moisture Barrier (excluding Premier Bac)
   6. Lifetime Dimensional Stability (for modular products only)

1.05 FIELD CONDITIONS

A. Store materials in area of installation for minimum period of 24 hours prior to installation.

Attachment: Exhibit B - Fire Station #96 Project Manual (2023-R-55 : Fire Station Construction)

PART 2 PRODUCTS

2.01 MANUFACTURERS

A. Basis of Design:

B. Milliken Remix

C. Substitutions - Subject to approval by Architect

2.02 MATERIALS

A. Carpet Tile Type 1:
   1. Product: Remix manufactured by Milliken
   2. Color: To be selected
   3. Construction: Tufted, Textured Loop
   4. Backing: PVC-Free WellBAC Comfort Cushion
   5. Dye Method: PrintWorks Precision Dyeing
   6. Fiber Type: Milliken-Certified WearOn Nylon
   7. Face Weight: 15 oz./sy. (508 grams/m2)
   8. Average Density: 6,541
   9. Gauge: 1/12
   10. Stitches: 9.8 stitches/in
   11. Pattern Repeat: N/A
   12. Soil Release: Yes
   13. Stain Resistance: Yes
   14. Bleach Resistance: Yes
   15. Standard Size: 9.85" X 39.4" (25 cm x 1 m)
   16. Testing Specifications - Pill Test: Yes
   17. Testing Specifications - Flooring Radiant Panel: Class 1
   18. Testing Specifications - Smoke Density: Less than 450 flaming (ASTM E 662)
   19. Testing Specifications - Static Test: Less than 3kv (AATCC-134)
   20. Testing Specifications - Lightfastness Test: 1

2.03 ACCESSORIES

A. Adhesives: Commercialon® Premium Modular Pressure Sensitive Adhesive, a premium modular flooring adhesive specifically formulated for bonding J+J Flooring Group's Nexus® Modular PVC backed carpet to the floor.

B. TileTabs® Connectors for Nexus® backed carpet tiles. A glue-free installation which eliminates the need for full spread adhesive which requires drying time. TileTabs® provide a mess-free installation and comply with CRI Green Label Plus (zero calculated emissions).

PART 3 EXECUTION

3.01 EXAMINATION

A. Examine and verify that sub-floor surfaces are smooth and flat within tolerances specified for that type of work and are ready to receive carpet tile.

B. Verify that wall surfaces are smooth and flat within the tolerances specified for that type of work, are dust-free, and are ready to receive carpet tile.

C. Verify that subfloor surfaces are dust-free and free of substances that could impair bonding of adhesive materials to subfloor surfaces.

3.02 PREPARATION

A. Dust, dirt, debris and noncompatible adhesive must be removed before the installation begins. Surfaces must be smooth and level with all holes and cracks filled with Portland cement-based patch reinforced with polymers or primed with TriSeal Sealer.

B. Remove subfloor ridges and bumps. Fill minor or local low spots, cracks, joints, holes, and other defects with subfloor filler.

Attachment: Exhibit B - Fire Station #96 Project Manual (2023-R-55 : Fire Station Construction)

C. Apply, trowel, and float filler to achieve smooth, flat, hard surface. Prohibit traffic until filler is cured.

D. Vacuum clean substrate.

E. CONCRETE MOISTURE TESTING and pH Testing - Substrate surfaces must be tested for moisture emission. It is the responsibility of the contractor to perform moisture testing prior to starting the installation. ASTM-F2170-2 relative humidity probe moisture testing or ASTM-F1869 calcium chloride testing can be performed on the concrete to determine the surface moisture emission rate. Acceptable relative humidity probe testing results are up to 75% RH. An acceptable result for calcium chloride moisture testing is up to 5 lbs per 1,000 SF per 24 hours. Alkalinity tests should also be performed per ASTM-F710. The maximum acceptable pH is 9.0. Invision prefers relative humidity probe moisture testing over calcium chloride testing, as the results are more accurate and reliable. For test results that determine RH test readings of 75% - 85%, moisture emission rates of 5 lbs - 8 lbs, or pH readings of 9.0 - 11.00, XL Brands DriSeal Concrete Moisture Sealer is required. NOTE: When both XL Brands TriSeal Sealer and DriSeal Concrete Moisture Sealer are required, TriSeal is applied prior to DriSeal.

F. New concrete requires a curing period of approximately 90 days.

3.03 INSTALLATION

A. Starting installation constitutes acceptance of subfloor conditions.

B. Install flooring in strict accordance with the finish drawings, manufacturer's instructions, and CRI Carpet Installation Standard. Install carpet tile in accordance with manufacturer's instructions and CRI 104.

C. FULL SPREAD ADHESIVE SYSTEM- J+J Flooring Group requires a full spread adhesive system for installation of Nexus Modular (carpet tile). Fully spread Commercialon® Premium Modular Pressure Sensitive Adhesive using a 1/32 x 1/16 x 1/16 “U” or “V” notch trowel or spread using a 3/8” foam paint roller. Keep the roller saturated and wet with adhesive throughout the installation in order to maintain a constant spread rate. Allow to completely dry so adhesive does not transfer when touched. The spread rate for Commercialon Premium Modular Adhesive is approximately 140 sq. yds. per four gallon bucket. Nexus® Modular Spray Adhesive is available in a 14 lbs cylinder (coverage is approx. 165 sq yds). Note: Inadequate amounts of adhesive can cause modules to shift and move and will not be covered under warranty. Warranty coverage requires the use of Commercialon Premium Modular Adhesive. J+J Flooring Group will not be responsible for the adhesive bond where other adhesives have been used.

D. TILE PLACEMENT - Arrows are embossed or printed on the module backing to show pile direction. To ensure proper alignment, check spacing every ten modules. Measure ten modules; proper spacing should be within ¼ inch. Continue to check spacing every ten modules throughout the entire installation. Tiles to be placed in an ashlar pattern.

E. PALLET AND BUNDLE SEQUENCING - It is very important to install Invision modules in the order they were manufactured; this is easily accomplished by selecting pallets in sequential order and following the numbers located on each bundle. Typically, an installation will begin with the lowest bundle numbers and progress through the highest numbers until the project is complete. Installing modules by bundle sequence will assure the most even uniform look possible. (For layout and installation instructions refer to Invision Carpet Installation Handbook or CRI 104 Standards.)

F. FINISHED INSTALLATION- Roll entire job with 75-100 lb. roller after completion of installation.

3.04 CLEANING

A. Remove excess adhesive without damage, from floor, base, and wall surfaces.

B. Clean and vacuum carpet surfaces.

END OF SECTION

Attachment: Exhibit B - Fire Station #96 Project Manual (2023-R-55 : Fire Station Construction)

SECTION 099000
PAINTING

PART 1 - GENERAL

1.01 RELATED DOCUMENTS:

A. Drawings and general provisions of Contract, including General and Supplementary Conditions and Division-1 Specification sections, apply to work of this section.

1.02 DESCRIPTION OF WORK:

A. Extent of painting work is indicated on drawings and schedules, and as herein specified.

B. Work includes painting and finishing of interior and exterior exposed items and surfaces throughout project, except as otherwise indicated.

C. Surface preparation, priming and coats of paint specified are in addition to shop-priming and surface treatment specified under other sections of work.

D. Work includes field painting of exposed bare and covered pipes and ducts (including color coding), and of hangers, exposed steel and iron work, and primed metal surfaces of equipment installed under mechanical and electrical work, except as otherwise indicated.

E. "Paint" as used herein means all coating systems materials, including primers, emulsions, enamels, stains, sealers and fillers, and other applied materials whether used as prime, intermediate or finish coats.

F. Surfaces to be Painted: Except where natural finish of material is specifically noted as a surface not to be painted, paint exposed surfaces whether or not colors are designated in "schedules". Where items or surfaces are not specifically mentioned, paint the same as similar adjacent materials or areas. If color or finish is not designated, Architect will select these from standard colors or finishes available.

G. Following categories of work are not included as part of field-applied finish work.

H. Pre-Finished Items: Unless otherwise indicated, do not include painting when factory- finishing or installer-finishing is specified for such items as (but not limited to) metal toilet enclosures, prefinished partition systems, acoustic materials, architectural woodwork and casework, elevator entrance doors and frames, elevator equipment, and finish mechanical and electrical equipment, including light fixtures, switchgear and distribution cabinets.

I. Concealed Surfaces: Unless otherwise indicated, painting is not required on surfaces such as walls or ceilings in concealed areas and generally inaccessible areas, foundation spaces, furred areas, utility tunnels, pipe spaces, duct shafts and elevator shafts.

J. Finished Metal Surfaces: Unless otherwise indicated, metal surfaces of anodized aluminum, stainless steel, chromium plate, copper, bronze and similar finished materials will not require finish painting.

K. Operating Parts: Unless otherwise indicated, moving parts of operating units, mechanical and electrical parts, such as valve and damper operators, linkages, sinkages, sensing devices, motor and fan shafts will not require finish painting.

L. Following categories of work are included under other sections of these specifications.

M. Shop Priming: Unless otherwise specified, shop priming of ferrous metal items is included under various sections for structural steel, metal fabrications, hollow metal work and similar items.

N. Unless otherwise specified, shop priming of fabricated components such as architectural woodwork, wood casework and shop-fabricated or factory-built mechanical and electrical equipment or accessories is included under other sections of these specifications.

O. Do not paint over any code-required labels, such as Underwriters' Laboratories and Factory Mutual, or any equipment identification, performance rating, name, or nomenclature plates.

Attachment: Exhibit B - Fire Station #96 Project Manual (2023-R-55 : Fire Station Construction)

1.03 QUALITY ASSURANCE:

A. Single Source Responsibility: Provide primers and other undercoat paint produced by same manufacturer as finish coats. Use only thinners approved by paint manufacturer, and use only within recommended limits.

B. Coordination of Work: Review other sections of these specifications in which prime paints are to be provided to ensure compatibility of total coatings systems for various substrates. Upon request from other trades, furnish information or characteristics of finish materials provided for use, to ensure compatible prime coats are used.

1.04 SUBMITTALS:

A. Product Data: Submit manufacturer's technical information including paint label analysis and application instructions for each material proposed for use.

B. Samples: Prior to beginning work, Architect will furnish color chips for surfaces to be painted. Use representative colors when preparing samples for review. Submit samples for Architect's review of color and texture only. Provide a listing of material and application for each coat of each finish sample.

C. On 12" x 12" hardboard, provide two samples of each color and material, with texture to simulate actual conditions. Resubmit samples as requested by Architect until acceptable sheen, color, and texture is achieved.

D. On actual wood surfaces, provide two 4" x 8" samples of natural and stained wood finish. Label and identify each as to location and application.

E. On concrete masonry, provide two 4" square samples of masonry for each type of finish and color, defining filler, prime and finish coat.

1.05 DELIVERY AND STORAGE:

A. Deliver materials to job site in original, new and unopened packages and containers bearing manufacturer's name and label, and following information:

B. Name or title of material.Manufacturer's name.

C. Fed. Spec. number, if applicable.Thinning instructions.

D. Manufacturer's stock number Contents by volume, for major pigment

and date of manufacturer and vehicle constituents

E. Application instructions.Color name and number.

F. Store materials not in actual use in tightly covered containers. Maintain containers used in storage of paint in a clean condition, free of foreign materials and residue.

G. Protect from freezing where necessary. Keep storage area neat and orderly. Remove oily rags and waste daily. Take all precautions to ensure that workmen and work areas are adequately protected from fire hazards and health hazards resulting from handling, mixing and application of paints.

1.06 JOB CONDITIONS:

A. Apply water-base paints only when temperature of surfaces to be painted and surrounding air temperatures are between 50 degrees F (10 degrees C) and 90 degrees F (32 degrees C), unless otherwise permitted by paint manufacturer's printed instructions.

B. Apply solvent-thinned paints only when temperature of surfaces to be painted and surrounding air temperatures are between 45 degrees F (7 degrees C) and 95 degrees F (35 degrees C), unless otherwise permitted by paint manufacturer's printed instructions.

C. Do not apply paint in snow, rain, fog or mist, or when relative humidity exceeds 85%, or to damp or wet surfaces, unless otherwise permitted by paint manufacturer's printed instructions.

D. Painting may be continued during inclement weather if areas and surfaces to be painted are enclosed and heated within temperature limits specified by paint manufacturer during application and drying periods.

Attachment: Exhibit B - Fire Station #96 Project Manual (2023-R-55 : Fire Station Construction)

PART 2 - PRODUCTS

2.01 ACCEPTABLE MANUFACTURERS:

A. Manufacturers:
   1. Sherwin Williams (basis of design)
   2. Coronado Paint Company/Benjamin Moore

2.02 MATERIALS:

A. Material Quality: Provide best quality grade of various types of coatings as regularly manufactured by acceptable paint materials manufacturers. Materials not displaying manufacturer's identification as a standard, best-grade product will not be acceptable.

B. Color Pigments: Pure, non-fading, applicable types to suit substrates and service indicated.

2.03 INTERIOR PAINT SYSTEMS (IPS):

A. IPS 1:Gypsum Drywall: Walls
   1. 1st coat:Sherwin Williams - B28W08000-PVA Drywall Primer & Sealer
   2. 2nd coat:Sherwin Williams - B20W12651 - Promar 200 Zero VOC Interior Latex Egg Shell.
   3. 3rd coat:Sherwin Williams - B20W12651 - Promar 200 Zero VOC Interior Latex Egg Shell.

B. IPS 2:Gypsum Drywall: Ceilings
   1. 1st coat:Sherwin Williams - B28W08000-PVA Drywall Primer & Sealer
   2. 2nd coat:Sherwin Williams - K46W00151-Pro Industrial Precatalyzed Waterbased Semi-Gloss Epoxy
   3. 3rd coat:Sherwin Williams - K46W00151-Pro Industrial Precatalyzed Waterbased Semi-Gloss Epoxy

C. IPS 3:Concrete Block:Existing Wall
   1. 1st coat:Sherwin Williams - B66W01151 - Pro Industrial DTM Acrylic Semi-Gloss
   2. 2st coat:Sherwin Williams - B66W01151 - Pro Industrial DTM Acrylic Semi-Gloss

D. IPS 4:Metal Doors and Frames
   1. 1st coat:Sherwin Williams - B66W00011 - Pro Industrial DTM Primer/Finish
   2. 2nd coat:Sherwin Williams - B66W01151 - Pro Industrial DTM Acrylic Semi-Gloss
   3. 3rd coat:Sherwin Williams - B66W01151 - Pro Industrial DTM Acrylic Semi-Gloss

E. IPS 5:Concrete Floors (other than Apparatus Bay)
   1. 1st coat:Sherwin Williams - B90W00111 - ArmorSeal Tread-Plex 100% Acrylic Floor Coating
   2. 2nd coat:Sherwin Williams - B90W00111 - ArmorSeal Tread-Plex 100% Acrylic Floor Coating (provide light sand finish)

F. IPS 6: Concrete Floors (at Apparatus Bay)
   1. 1st coat:Coronado/Insl-x Pre-Prime V155
   2. 2nd coat:Coronado/Insl-x V400 Polyamide Epoxy
   3. 3rd coat:Coronado/Insl-x V400 Polyamide Epoxy
   4. 4th coat:Coronado/Insl-x Coroguard Superthane Aliphatic Urethane 827 Line

2.04 EXTERIOR PAINT SYSTEMS (EPS)

A. EPS 1:Metal Doors and Frames
   1. 1st coat:Sherwin Williams - B66W00011 - Pro Industrial DTM Primer/Finish
   2. 2nd coat:Sherwin Williams - B66W01151 - Pro Industrial DTM Acrylic Semi-Gloss
   3. 3rd coat:Sherwin Williams - B66W01151 - Pro Industrial DTM Acrylic Semi-Gloss

PART 3 - EXECUTION

3.01 INSPECTION:

A. Applicator must examine areas and conditions under which painting work is to be applied and notify Contractor in writing of conditions detrimental to proper and timely completion of work. Do not proceed with work until unsatisfactory conditions have been corrected in a manner acceptable to Applicator.

Attachment: Exhibit B - Fire Station #96 Project Manual (2023-R-55 : Fire Station Construction)

B. Starting of painting work will be construed as Applicator's acceptance of surfaces and conditions within any particular area.

C. Do not paint over dirt, rust, scale, grease, moisture, scuffed surfaces, or conditions otherwise detrimental to formation of a durable paint film.

3.02 SURFACE PREPARATION:

A. General: Perform preparation and cleaning procedures in accordance with paint manufacturer's instructions and as herein specified, for each particular substrate condition.

B. Provide barrier coats over incompatible primers or remove and reprime as required. Notify Architect in writing of any anticipated problems in using the specified coating systems with substrates primed by others.

C. Remove hardware, hardware accessories, machined surfaces, plates, lighting fixtures, and similar items in place and not to be finish-painted, or provide surface-applied protection prior to surface preparation and painting operations. Remove, if necessary, for complete painting of items and adjacent surfaces. Following completion of painting of each space or area, reinstall removed items.

D. Clean surfaces to be painted before applying paint or surface treatments. Remove oil and grease prior to mechanical cleaning.

E. Program cleaning and painting so that contaminants from cleaning process will not fall onto wet, newly-painted surfaces.

F. Cementitious Materials: Prepare cementitious surfaces of concrete, concrete block, cement plaster and cement-asbestos board to be painted by removing efflorescence, chalk, dust, dirt, grease, oils, and by roughening as required to remove glaze.

G. Determine alkalinity and moisture content of surfaces to be painted by performing appropriate tests. If surfaces are found to be sufficiently alkaline to cause blistering and burning of finish paint, correct this condition before application of paint. Do not paint over surfaces where moisture content exceeds that permitted in manufacturer's printed directions.

H. Clean concrete floor surfaces scheduled to be painted with a commercial solution of muriatic acid, or other etching cleaner. Flush floor with clean water to neutralize acid, and allow to dry before painting.

I. Wood: Clean wood surfaces to be painted of dirt, oil, or other foreign substances with scrapers, mineral spirits, and sandpaper, as required. Sandpaper smooth those finished surfaces exposed to view, and dust off. Scrape and clean small, dry, seasoned knots and apply a thin coat of white shellac or other recommended knot sealer, before application of priming coat. After priming, fill holes and imperfections in finish surfaces with putty or plastic wood-filler. Sandpaper smooth when dried.

J. Prime, stain, or seal wood required to be job-painted immediately upon delivery to job. Prime edges, ends, faces, undersides, and backsides of such wood, including cabinets, counters, cases, paneling.

K. When transparent finish is required, use spar varnish for backpriming.

L. Backprime paneling on interior partitions only where masonry, plaster, or other wet wall construction occurs on backside.

M. Seal tops, bottoms, and cut-outs of unprimed wood doors with a heavy cot of varnish or equivalent sealer immediately upon delivery to job.

N. Ferrous Metals: Clean ferrous surfaces, which are not galvanized or shop-coated, of oil, grease, dirt, loose mill scale and other foreign substances by solvent or mechanical cleaning.

O. Touch-up shop-applied prime coats wherever damaged or bare, where required by other sections of these specifications. Clean and touch-up with same type shop primer.

P. Galvanized Surfaces: Clean free of oil and surface contaminants with non-petroleum based solvent.

Attachment: Exhibit B - Fire Station #96 Project Manual (2023-R-55 : Fire Station Construction)

3.03 MATERIALS PREPARATION:

A. Mix and prepare painting materials in accordance with manufacturer's directions.

B. Maintain containers used in mixing and application of paint in a clean condition, free of foreign materials and residue.

C. Stir materials before application to produce a mixture of uniform density, and stir as required during application. Do not stir surface film into material. Remove film and, if necessary, strain material before using.

3.04 APPLICATION:

A. General: Apply paint in accordance with manufacturer's directions. Use applicators and techniques best suited for substrate and type of material being applied.

B. Paint colors, surface treatments, and finishes, are indicated in "schedules" of the contract documents.

C. Provide finish coats which are compatible with prime paints used.

D. Apply addition coats when undercoats, stains or other conditions show through final coat of paint, until paint film is of uniform finish, color and appearance. Give special attention to insure that surfaces, including edges, corners, crevices, welds, and exposed fasteners receive a dry film thickness equivalent to that of flat surfaces.

E. Paint surfaces behind movable equipment and furniture same as similar exposed surfaces. Paint surfaces behind permanently- fixed equipment or furniture with prime coat only before final installation of equipment.

F. Paint interior surfaces of ducts, where visible through registers or grilles, with a flat, non-specular black paint.

G. Paint back sides of access panels, and removable or hinged covers to match exposed surfaces.

H. Finish exterior doors on tops, bottoms and side edges same as exterior faces, unless otherwise indicated.

I. Sand lightly between each succeeding enamel or varnish coat.

J. Omit first coat (primer) on metal surfaces which have been shop-primed and touch-up painted, unless otherwise indicated.

K. Scheduling Painting: Apply first-coat material to surfaces that have been cleaned, pretreated or otherwise prepared for painting as soon as practicable after preparation and before subsequent surface deterioration.

L. Allow sufficient time between successive coatings to permit proper drying. Do not recoat until paint has dried to where it feels firm, does not deform or feel sticky under moderate thumb pressure, and application of another coat of paint does not cause lifting or loss of adhesion of the undercoat.

M. Minimum Coating Thickness: Apply materials at not less than manufacturer's recommended spreading rate, to establish a total dry film thickness as indicated or, if not indicated, as recommended by coating manufacturer.

N. Mechanical items to be painted include, but are not limited to, items which may be indicated on drawings or in Division 15 specifications section.

O. Electrical items to be painted include, but are not limited to, : items which may be indicated on drawings or in Division 16 specifications section text.the following:

P. Prime Coats: Apply prime coat of material which is required to be painted or finished, and which has not been prime coated by others.

Q. Recoat primed and sealed surfaces where there is evidence of suction spots or unsealed areas in first coat, to assure a finish coat with no burn-through or other defects due to insufficient sealing.

Attachment: Exhibit B - Fire Station #96 Project Manual (2023-R-55 : Fire Station Construction)

R. Stipple Enamel Finish: Roll and redistribute paint to an even and fine texture. Leave no evidence of rolling such as laps, irregularity in texture, skid marks, or other surface imperfections.

S. Pigmented (Opaque) Finishes: Completely cover to provide an opaque, smooth surface of uniform finish, color, appearance and coverage. Cloudiness, spotting, holidays, laps, brush marks, runs, sags, ropiness or other surface imperfections will not be acceptable.

T. Transparent (Clear) Finishes: Use multiple coats to produce glass-smooth surface film of even luster. Provide a finish free of laps, cloudiness, color irregularity, runs, brush marks, orange peel, nail holes, or other surface imperfections.

U. Provide satin finish for final coats, unless otherwise indicated.

V. Completed Work: Match approved samples for color, texture and coverage. Remove, refinish or repaint work not in compliance with specified requirements.

3.05 CLEAN-UP AND PROTECTION:

A. Clean-Up: During progress of work, remove from site discarded paint materials, rubbish, cans and rags at end of each work day.

B. Upon completion of painting work, clean window glass and other paint-spattered surfaces. Remove spattered paint by proper methods of washing and scraping, using care not to scratch or otherwise damage finished surfaces.

C. Protection: Protect work of other trades, whether to be painted or not, against damage by painting and finishing work. Correct any damage by cleaning, repairing or replacing, and repainting, as acceptable to Architect.

D. Provide "Wet Paint" signs as required to protect newly-painted finishes. Remove temporary protective wrappings provided by others for protection of their work, after completion of painting operations.

E. At completion of work of other trades, touch-up and restore all damaged or defaced painted surfaces.

END OF SECTION

Attachment: Exhibit B - Fire Station #96 Project Manual (2023-R-55 : Fire Station Construction)

SECTION 101400
PLASTIC SIGNS

PART 1 - GENERAL

1.01 RELATED DOCUMENTS:

A. Drawings and general provisions of the Contract, including General and Supplementary Conditions and Division-1 Specification sections, apply to the work of this section.

1.02 DESCRIPTION OF WORK:

A. Forms of specialty signs required include the following:
   1. Panel Signs (Plastic Room Identification Signs). Signs to be installed at every room.

1.03 QUALITY ASSURANCE:

A. Uniformity of Manufacturer: For each sign form and graphic image process indicated furnish products of a single manufacturer.

1.04 SUBMITTALS:

A. Shop Drawings: Submit shop drawings for fabrication and erection of specialty signs. Include plans, elevations, and large scale details of sign wording and lettering layout. Show anchorages and accessory items. Furnish location template drawings for items supported or anchored to permanent construction.

B. Furnish full-size spacing templates for individual building- mounted letters and numbers.

C. Product Data: Submit manufacturer's technical data and installation instructions for each type of sign required.

D. Samples: Submit samples of each sign form and material showing finishes, colors, surface textures and qualities of manufacturer and design of each sign component including graphics.

PART 2 - PRODUCTS

2.01 MANUFACTURERS:

A. Acceptable Manufacturers: Subject to compliance with requirements, manufacturers offering products which may be incorporated into the Work include, but are not necessarily limited to, the following:
   1. Manufacturers of Panel Signs (Plastic Room Identification Signs):
      a. Andco Industries Corp.
      b. Best Manufacturing Co.
      c. U.S. Identity Group, LLC
      d. Multi-graphics
      e. Inner-Graphic Systems

2.02 PANEL SIGNS (PLASTIC ROOM IDENTIFICATION SIGNS):

A. Plastic Room Identification Signs shall be 8" x 8" or as otherwise indicated, with minimum 3/4" high letters and numbers (see details of specific sign types at end of this section)., with 1/32" thick raised letters, and Braille tag each (Grade 2). Sign thickness shall be 3/16". Mounting shall be SAM (Silastic Adhesive Mount). Colors to be selected. Where signs are scheduled to be mounted on glass panels, provide adhesive film on inside of glass surface of same size of sign, to cover mounting. Color same as sign.

B. Handicapped Access Signage shall be square corner, level edge, full center format featuring International Symbol for handicapped access.

C. Directional Signage (provided and installed by owner)
   1. Provide directional signage at corridor intersections, lobbies, balconies, etc. indicating direction of travel to designated rooms for emergency responders. Coordinate with architect for exact wording and locations.

Attachment: Exhibit B - Fire Station #96 Project Manual (2023-R-55 : Fire Station Construction)

PART 3 - EXECUTION

3.01 INSTALLATION:

A. General: Locate sign units and accessories where shown or scheduled, using mounting methods of the type described and in compliance with the manufacturer's instructions.

B. Install sign units level, plumb and at the height indicated, with sign surfaces free from distortion or other defects in appearance.

C. Metal Numbers: Mount letters and numbers using standard fastening methods recommended by the manufacturer for the letter form, type of mounting, wall construction and condition of exposure indicated. Provide heavy paper template to establish letter spacing and to locate holes for fasteners.

D. Projected Mounting: Mount letters at 1/2" from the wall surface indicated.

E. Panel Signs (Plastic Room Identification Signs):
   1. Attach plastic panel signs to wall, door and door frame surfaces using Mohawk SAM mounting system or equal. Use double-sided vinyl tape to hold sign in place until adhesive has been fully cured.

3.02 CLEANING AND PROTECTION:

A. At completion of the installation, clean soiled sign surfaces in accordance with the manufacturer's instructions. Protect units from damage until acceptance by the Owner.

3.03 NOTES:

A. Install the following sign on outside face of all Mechanical and Electrical Room doors, using 3/4" high letters (all caps):
   1. STORAGE NOT PERMITTED

B. Provide “FIRE ALARM PULL STATION AND FIRE EXTINGUISHER INSIDE” signs where indicated on the drawings, Architectural and Electrical, or if not so indicated, where required by applicable Code. Arrange sign on 8" x 8" plaque using appropriate size lettering. Color to be selected.

END OF SECTION

Attachment: Exhibit B - Fire Station #96 Project Manual (2023-R-55 : Fire Station Construction)

SECTION 104400
LIFE SAFETY EQUIPMENT AND ACCESSORIES

PART 1 GENERAL

1.01 SECTION INCLUDES

A. Fire extinguishers.

B. Fire extinguisher cabinets.

C. Accessories.

1.02 REFERENCE STANDARDS

A. NFPA 10 - Standard for Portable Fire Extinguishers; 2013.

B. UL (DIR) - Online Certifications Directory; current listings at database.ul.com.

1.03 PERFORMANCE REQUIREMENTS

A. Conform to NFPA 10.

B. Provide extinguishers classified and labeled by Underwriters Laboratories Inc. for the purpose specified and indicated.

1.04 SUBMITTALS

A. See Section 013000 - Submittals, for submittal procedures.

B. Product Data: Provide extinguisher operational features, color and finish, and anchorage details.

C. Manufacturer's Certificate: Certify that products meet or exceed specified requirements.

D. Maintenance Data: Include test, refill or recharge schedules and re-certification requirements.

PART 2 PRODUCTS

2.01 FIRE EXTINGUISHERS

A. Fire Extinguishers - General: Comply with product requirements of NFPA 10 and applicable codes, whichever is more stringent.

B. Dry Chemical: Stainless steel tank, with pressure gage.
   1. Class 4A:60B:C.
   2. Size 10.
   3. Finish: Baked enamel, red color.

2.02 FIRE EXTINGUISHER CABINETS

A. Metal: Formed stainless steel sheet; 0.036 inch thick base metal.

2.03 ACCESSORIES

A. Extinguisher Brackets: Formed steel, chrome-plated, with latching steel strap.

PART 3 EXECUTION

3.01 EXAMINATION

A. Verify existing conditions before starting work.

3.02 INSTALLATION

A. Install all specified products in accordance with manufacturer's instructions.

B. Secure all specified products rigidly in place.

C. Place extinguishers on wall brackets, as directed.

3.03 CLEANING AND PROTECTION

A. Clean all specified products after installation and prior to Substantial Completion and Owner occupancy.

Attachment: Exhibit B - Fire Station #96 Project Manual (2023-R-55 : Fire Station Construction)

B. Protect all installed products from damage by subsequent construction activities.

END OF SECTION

Attachment: Exhibit B - Fire Station #96 Project Manual (2023-R-55 : Fire Station Construction)

SECTION 310000
EARTHWORK

PART 1 - GENERAL

1.01 RELATED DOCUMENTS

A. Drawings and general provisions of Contract, including General and Supplementary Conditions and Division 1 Specification Sections, apply to this Section.

1.02 SUMMARY

A. This Section includes the following:
   1. Preparing of subgrade for building slabs, walks, grassed areas, and pavements.
   2. Supplying and placement of fill for buildings, paving, and grassed areas.
   3. Excavating and backfilling of trenches within building lines.
   4. Excavating and backfilling for underground mechanical and electrical utilities, buried mechanical and electrical appurtenances, potable water systems, fire water systems, storm sewage systems, sanitary sewage systems, and other underground utilities.

1.03 DEFINITIONS

A. Excavation consists of removal of material encountered to subgrade elevations indicated and subsequent disposal of materials removed.

B. Unauthorized excavation consists of removal of materials beyond indicated subgrade elevations or dimensions without specific direction of Architect. Unauthorized excavation, as well as remedial work directed by Architect, shall be at Contractor's expense.

C. Under footings, foundation bases, or retaining walls, fill unauthorized excavation by extending indicated bottom elevation of footing or base to excavation bottom, without altering required top elevation. Lean concrete fill may be used to bring elevations to proper position, when acceptable to Architect.

D. In locations other than those above, backfill and compact unauthorized excavations as specified for authorized excavations of same classification, unless otherwise directed by Architect.

E. Additional Excavation: When excavation has reached required subgrade elevations, notify Architect, who will make an inspection of conditions. If Architect determines that bearing materials at required subgrade elevations are unsuitable, continue excavation until suitable bearing materials are encountered and replace excavated material as directed by Architect. The Contract Sum may be adjusted by an appropriate Contract Modification.

F. Removal of unsuitable material and its replacement as directed will be paid on basis of Conditions of the Contract relative to changes in work.

G. Subgrade: The undisturbed earth or the compacted soil layer immediately below granular subbase, drainage fill, or topsoil materials.

H. Structure: Buildings, foundations, slabs, tanks, curbs, or other man-made stationary features occurring above or below ground surface.

1.04 SUBMITTALS

A. Test Reports: Submit the following reports directly to Architect from the testing services, with copy to Contractor and the Owner (UBCI):

B. Test reports on fill material.

C. Test reports on borrow material.

D. Verification of suitability of each footing subgrade material, in accordance with specified requirements.

E. Field reports; in-place soil density tests.

F. One optimum moisture-maximum density curve for each type of soil encountered.

G. Report of actual unconfined compressive strength and/or results of bearing tests of each strata tested.

Attachment: Exhibit B - Fire Station #96 Project Manual (2023-R-55 : Fire Station Construction)

1.05 QUALITY ASSURANCE

A. Codes and Standards: Perform excavation work in compliance with applicable requirements of authorities having jurisdiction.

B. Testing and Inspection Service: Owner will employ and pay for a qualified independent geotechnical testing and inspection laboratory to perform soil testing and inspection service during earthwork operations.

1.06 PROJECT CONDITIONS

A. Site Information: Data in subsurface investigation reports was used for the basis of the design and are available to the Contractor for information only. Conditions are not intended as representations or warranties of accuracy or continuity between soil borings. The Owner will not be responsible for interpretations or conclusions drawn from this data by Contractor.

B. Subsurface soil exploration and Geotechnical Engineering Evaluation prepared by Universal Engineering Sciences, report number 141214, dated February 15, 2023, is included at the end of this section.

C. Additional test borings and other exploratory operations may be performed by Contractor, at the Contractor's option; however, no change in the Contract Sum will be authorized for such additional exploration. When additional test borings or other operations are made and results available, submit a copy to the Architect, immediately.

D. Existing Utilities: Locate existing underground utilities within the limits of construction prior to beginning work. If utilities are indicated to remain in place, provide adequate means of support and protection during earthwork operations.

E. Should uncharted, or incorrectly charted, piping or other utilities be encountered during excavation, consult utility owner immediately for directions. Cooperate with Owner and utility companies in keeping respective services and facilities in operation. Repair damaged utilities to satisfaction of utility owner.

F. Do not interrupt existing utilities serving facilities occupied by Owner or others, during occupied hours, except when permitted in writing by Architect and then only after acceptable temporary utility services have been provided.
   1. Provide minimum of 48-hour notice to Architect, and receive written notice to proceed before interrupting any utility.

G. Demolish and completely remove from site existing underground utilities indicated to be removed. Coordinate with utility companies for shutoff of services if lines are active.

H. Protection of Persons and Property: Barricade open excavations occurring as part of this work and post with warning lights.

I. Protect structures, utilities, sidewalks, pavements, and other facilities from damage caused by settlement, lateral movement, undermining, washout, and other hazards created by earthwork operations.

J. Perform excavation by hand within dripline of large trees to remain. Protect root systems from damage or dryout to the greatest extent possible. Maintain moist condition for root system and cover exposed roots with moistened burlap.

PART 2 - PRODUCTS

2.01 SOIL MATERIALS

A. Satisfactory soil materials are defined as those complying with ASTM D2487 soil classification groups GW, GP, GM, SM, SW, and SP.

B. Unsatisfactory soil materials are defined as those complying with ASTM D2487 soil classification groups GC, SC, ML, MH, CL, CH, OL, OH, and PT.

C. Subbase Material: Naturally or artificially graded mixture of natural or crushed gravel, crushed stone, crushed slag, and natural or crushed sand.

Attachment: Exhibit B - Fire Station #96 Project Manual (2023-R-55 : Fire Station Construction)

D. Fill Materials within building pads and pavement: Inorganic, non-plastic granular soil, fine sand (SP) and fine sand with silt (SP-SM) containing less than 5% fines passing the No. 200 Standard Sieve.

E. Fill Materials within all other areas including grassed areas: Inorganic, non-plastic granular soil containing less than 5% fines passing the No. 200 Standard Sieve (clean sands).

F. All fill materials should be evaluated and tested by the Geotechnical Engineer prior to placement to determine if they are suitable for the intended use.

PART 3 - EXECUTION

3.01 GENERAL

A. All earthwork, including excavation and compaction, shall be accomplished in accordance with recommendations in the Subsurface soil exploration and Geotechnical Engineering Evaluation prepared by Universal Engineering Sciences, report number 141214, dated February 15, 2023.

B. Contractor shall be responsible for providing all fill material necessary to achieve the finished grades shown on the plans. No excavated on-site materials may be used for fill material. Contractor shall import fill as necessary to achieve finished grades, and shall haul off and dispose of any unsuitable fill excavated from this site, with both importing and disposal and hauling for each at no additional expense to the Owner.

3.02 EXCAVATION

A. Excavation is unclassified and includes excavation to subgrade elevations indicated, regardless of character of materials and obstructions encountered.

B. Earth Excavation includes excavation of pavements and other obstructions visible on surface; underground structures, utilities, and other items indicated to be demolished and removed; together with earth and other materials encountered that are not classified as rock or unauthorized excavation.

3.03 STABILITY OF EXCAVATIONS

A. General: Comply with local codes, ordinances, and requirements of agencies having jurisdiction.

B. Slope sides of excavations to comply with local codes, ordinances, and requirements of agencies having jurisdiction. Shore and brace where sloping is not possible because of space restrictions or stability of material excavated. Maintain sides and slopes of excavations in safe condition until completion of backfilling.

C. Shoring and Bracing: Provide materials for shoring and bracing, such as sheet piling, uprights, stringers, and cross braces, in good serviceable condition. Maintain shoring and bracing in excavations regardless of time period excavations will be open. Extend shoring and bracing as excavation progresses.

3.04 DEWATERING

A. Prevent surface water and subsurface or ground water from flowing into excavations and from flooding project site and surrounding area.

B. Do not allow water to accumulate in excavations. Remove water to prevent softening of foundation bottoms, undercutting footings, and soil changes detrimental to stability of subgrades and foundations. Provide and maintain pumps, well points, sumps, suction and discharge lines, and other dewatering system components necessary to convey water away from excavations.

C. Establish and maintain temporary drainage ditches and other diversions outside excavation limits to convey rain water and water removed from excavations to collecting or runoff areas. Do not use trench excavations as temporary drainage ditches.

D. Use of a pump greater than 4-inch diameter will require a permit from the St. John's River Water Management District. The Contractor shall be responsible for obtaining all permits and approvals required for dewatering.

Attachment: Exhibit B - Fire Station #96 Project Manual (2023-R-55 : Fire Station Construction)

3.05 STORAGE OF EXCAVATED MATERIALS

A. Stockpile excavated materials acceptable for backfill and fill where directed. Place, grade, and shape stockpiles for proper drainage.

B. Locate and retain soil materials away from edge of excavations. Do not store within drip line of trees indicated to remain.

C. Dispose of excess excavated soil material and materials not acceptable for use as backfill or fill.

3.06 EXCAVATION FOR STRUCTURES

A. Conform to elevations and dimensions shown within a tolerance of plus or minus 0.10 foot, and extending a sufficient distance from footings and foundations to permit placing and removal of concrete formwork, installation of services, and other construction and for inspection.

B. Excavations for footings and foundations: Do not disturb bottom of excavation. Excavate by hand to final grade just before concrete reinforcement is placed. Trim bottoms to required lines and grades to leave solid base to receive other work. Any unsuitable material shall be over-excavated and stockpiled separately with other deleterious materials.

C. Excavation for Underground Tanks, Basins, and Mechanical or Electrical Structures: Conform to elevations and dimensions indicated within a tolerance of plus or minus 0.10 foot; plus a sufficient distance to permit placing and removal of concrete formwork, installation of services, and other construction and for inspection. Do not disturb bottom of excavations, intended for bearing surface.

3.07 EXCAVATION FOR PAVEMENTS

A. Cut surface under pavements to comply with cross-sections, elevations and grades as indicated.

B. The entire parking and driveway areas shall be stripped and grubbed of all surface vegetation, roots, and topsoil.

C. The natural subgrade layer shall be proofrolled with nonvibratory equipment. All material in areas that yield during the compaction operation shall be removed and replaced with suitable compacted fill.

D. The subbase soils shall be compacted in accordance with recommendations of the Subsurface soil exploration and Geotechnical Engineering Evaluation prepared by Universal Engineering Sciences, report number 141214, dated February 15, 2023.

3.08 TRENCH EXCAVATION FOR PIPES AND CONDUIT

A. Excavate trenches to uniform width, sufficiently wide to provide ample working room and a minimum of 6 to 9 inches of clearance on both sides of pipe or conduit.

B. Excavate trenches and conduit to depth indicated or required to establish indicated slope and invert elevations and to support bottom of pipe or conduit on undisturbed soil.

C. For pipes or conduit less than 6 inches in nominal size, and for flat-bottomed, multiple-duct conduit units, do not excavate beyond indicated depths. Hand-excavate bottom cut to accurate elevations and support pipe or conduit on undisturbed soil.

D. For pipes and equipment 6 inches or larger in nominal size, shape bottom of trench to fit bottom of pipe for 90 degrees (bottom 1/4 of the circumference). Fill depressions with tamped sand backfill. At each pipe joint, dig bell holes to relieve pipe bell of loads ensure continuous bearing of pipe barrel on bearing surface.

3.09 COLD WEATHER PROTECTION

A. Protect excavation bottoms against freezing when atmospheric temperature is less than 35 deg.F.

3.10 BACKFILL AND FILL

A. General: Place soil material in layers to required subgrade elevations, for each area classification listed below, using materials specified in Part 2 of this Section.

Attachment: Exhibit B - Fire Station #96 Project Manual (2023-R-55 : Fire Station Construction)

B. Under grassed areas, use satisfactory excavated or borrow material.

C. Under walks and pavements, use subbase material, satisfactory excavated or borrow material, or a combination.

D. Under steps, use subbase material.

E. Under building slabs, use subbase material.

F. Under piping and conduit and equipment, use subbase materials where required over rock bearing surface, for correction of unauthorized excavation, and for stabilization of wet trench conditions. Shape excavation bottom to fit bottom 90 degrees of cylinder.

G. Backfill trenches with concrete where trench excavations pass within 18 inches of column or wall footings and that are carried below bottom of such footings or that pass under wall footings. Place concrete to level of bottom of adjacent footing.
   1. Concrete is specified in Division 3.
   2. Do not backfill trenches until tests and inspections have been made and backfilling is authorized by Architect. Use care in backfilling to avoid damage or displacement of pipe systems.
   3. Backfill excavations as promptly as work permits, but not until completion of the following:

H. Acceptance of construction below finish grade including, where applicable, dampproofing, waterproofing, and perimeter insulation.

I. Inspection, testing, approval, and recording locations of underground utilities have been performed and recorded.

J. Removal of concrete formwork.

K. Removal of shoring and bracing, and backfilling of voids with satisfactory materials. Cut off temporary sheet piling driven below bottom of structures and remove in manner to prevent settlement of the structure or utilities, or leave in place if required.

L. Removal of trash and debris from excavation.

M. Permanent or temporary horizontal bracing is in place on horizontally supported walls.

3.11 PLACEMENT AND COMPACTION

A. Ground Surface Preparation: Remove vegetation, debris, unsatisfactory soil materials, obstructions, and deleterious materials from ground surface prior to placement of fills. Plow strip, or break up sloped surfaces steeper than 1 vertical to 4 horizontal so that fill material will bond with existing surface.

B. When existing ground surface has a density less than that specified under "Compaction" for particular area classification, break up ground surface, pulverize, moisture-condition to optimum moisture content, and compact to required depth and percentage of maximum density.

C. Any structural fill which shall be required to raise the building areas to finish grade shall be placed and compacted in accordance with recommendations of the Subsurface soil exploration and Geotechnical Engineering Evaluation prepared by Universal Engineering Sciences, report number 141214, dated February 15, 2023.

D. Soils placed adjacent to footings or walls shall be carefully compacted with light rubber tired or vibratory plate compactors to avoid damage to the footings or walls. Large compaction equipment shall not be utilized adjacent to completed portions of the structure.

E. Fill placement: Any fill required to backfill excavations, trenches, or to bring the site to required grade shall be properly placed and compacted in accordance with recommendations of the Subsurface soil exploration and Geotechnical Engineering Evaluation prepared by Universal Engineering Sciences, report number 141214, dated February 15, 2023. Further, fill slopes shall not exceed 4 horizontal to 1 vertical. All fill placed in utility line trenches and adjacent to walls or footings beneath slabs on grade shall also be properly placed and compacted to the specified density.

F. Prior to beginning the compaction process, moisture contents within the foundation soils shall be controlled so that they will approach the optimum required for maximum compatibility. If

Attachment: Exhibit B - Fire Station #96 Project Manual (2023-R-55 : Fire Station Construction)

additional water is required to increase moisture contents, the water shall be applied in such a manner that it ill not cause erosion or disturbance of the surface soil.

G. Fill shall not be placed over any natural in-place soils until the natural deposits have been compacted as specified above. All proposed sources of structural fill shall be approved by the independent testing service and the Architect prior to their placement within the building areas.

H. Field tests shall be conducted during the construction phase of the project to demonstrate that the in-place soil densification and compaction operations are carried out in accordance with the intent of the project specifications.

3.12 GRADING

A. General: Uniformly grade areas within limits of grading under this section, including adjacent transition areas. Smooth finished surface within specified tolerances, compact with uniform levels or slopes between points where elevations are indicated or between such points and existing grades.

B. Grading Outside Building Lines: Grade areas adjacent to building lines to drain away from structures and to prevent ponding. Finish surfaces free from irregular surface changes and as follows:

C. Lawn or Unpaved Areas: Finish areas to receive topsoil to within not more than 0.10 foot above or below required subgrade elevations.

D. Walks: Shape surface of areas under walks to line, grade, and cross-section, with finish surface not more than 0.10 foot above or below required subgrade elevation.

E. Pavements: Shape surface of areas under pavement to line, grade, and cross-section, with finish surface not more than 1/2 inch above or below required subgrade elevation.

F. Grading Surface of Fill under Building Slabs: Grade smooth and even, free of voids, compacted as specified, and to required elevation. Provide final grades within a tolerance of 1/2 inch when tested with a 10-foot straightedge.

G. Compaction: After grading, compact subgrade surfaces to the depth and indicated percentage of maximum or relative density for each area classification.

3.13 PAVEMENT SUBBASE COURSE

A. General: Subbase course consists of placing subbase material, in layers of specified thickness, over subgrade surface to support a pavement base course.
   1. Refer to other Division 2 sections for paving specifications.
   2. Grade Control: During construction, maintain lines and grades including crown and cross-slope of subbase course.
   3. Shoulders: Place shoulders along edges of subbase course to prevent lateral movement. Construct shoulders of acceptable soil materials, placed in such quantity to compact to thickness of each subbase course layer. Compact and roll at least a 12-inch width of shoulder simultaneous with the compaction and rolling of each layer of subbase course.
   4. Placing: Place subbase course material on prepared subgrade in layers of uniform thickness, conforming to indicated cross-section and thickness. Maintain optimum moisture content for compacting subbase material during placement operations.
   5. When a compacted subbase course is indicated to be 6 inches thick or less, place material in a single layer. When indicated to be more than 6 inches thick, place material in equal layers, except no single layer more than 6 inches or less than 3 inches in thickness when compacted.

3.14 FIELD QUALITY CONTROL

A. Quality Control Testing During Construction: Allow testing service to inspect and approve each subgrade and fill layer before further backfill or construction work is performed.

B. Perform field density tests in accordance with recommendations of the Subsurface soil exploration and Geotechnical Engineering Evaluation prepared by Universal Engineering Sciences, report number 141214, dated February 15, 2023.

Attachment: Exhibit B - Fire Station #96 Project Manual (2023-R-55 : Fire Station Construction)

3.15 EROSION CONTROL

A. Provide erosion control methods in accordance with requirements of local authority of jurisdiction and the St. John's River Water Management District.

B. Take all necessary measures throughout the duration of the project to control erosion and silting of compacted subgrades, retention pond areas and other graded areas. Construction of drainage facilities as well as performance of other work which will contribute to the control of erosion and siltation shall be carried out in conjunction with earthwork and other landscaping operations as described herein.

C. Erosion and siltation control measures shall include, but not be limited to siltation fences, straw bales, construction of temporary berms or slope drains and the use of temporary mulches, mats or seeding as approved by the Architect.

D. Erosion and siltation control materials, methods and installation procedures shall be in accordance with current FDOT "Standard Specifications for Road and Bridge Construction".

3.16 MAINTENANCE

A. Protection of Graded Areas: Protect newly graded areas from traffic and erosion. Keep free of trash and debris.

B. Repair and reestablish grades in settled, eroded, and rutted areas to specified tolerances.

C. Reconditioning Compacted Areas: Where completed compacted areas are disturbed by subsequent construction operations or adverse weather, scarify surface, reshape, and compact to required density prior to further construction.

D. Settling: Where settling is measurable or observable at excavated areas during general project warranty period, remove surface (pavement, lawn, or other finish), add backfill material, compact, and replace surface treatment. Restore appearance, quality, and condition of surface or finish to match adjacent work, and eliminate evidence of restoration to greatest extent possible.

3.17 DISPOSAL OF EXCESS AND WASTE MATERIALS

A. Removal from Owner's Property: Remove waste materials, including unacceptable excavated material, trash, and debris, and dispose of it legally off Owner's property. Burning of materials on Owner's property or on adjacent property is strictly prohibited.

END OF SECTION

Attachment: Exhibit B - Fire Station #96 Project Manual (2023-R-55 : Fire Station Construction)

UNIVERSAL
ENGINEERING SCIENCES

GEOTECHNICAL EVALUATION

Fire Station No. 96 Replacement
Holly Hill, Volusia County, Florida

UES Project No. 0430.2200315.0000
UES Report No. 141214

February 15, 2023

Prepared for:

Mr. John Hall
Hall & Ogle Architects, Inc.
208 Magnolia Avenue
Daytona Beach, Florida 32114

Prepared by:

UNIVERSAL ENGINEERING SCIENCES
911 Beville Road, Suite 3
South Daytona, Florida 32119

CONSULTANTS:

Geotechnical Engineering • Environmental Engineering • Construction Materials Testing Threshold Inspection • Private Provider Inspection • Geophysical Studies

OFFICES: Daytona Beach, FL • Fort Myers, FL • Fort Pierce, FL • Gainesville, FL • Jacksonville, FL • Leesburg, FL • Miami, FL • Norcross, GA • Ocala, FL • Orange City, Orlando, FL Palm Coast, FL • Panama City, FL • Pensacola, FL • Rockledge, FL • Sarasota, FL • St. Augustine, FL • Tampa, FL • West Palm Beach, FL

Attachment: Exhibit B - Fire Station #96 Project Manual (2023-R-55 : Fire Station Construction)

UNIVERSAL
ENGINEERING SCIENCES
Consultants In: Geotechnical Engineering • Environmental Sciences
Geophysical Services • Construction Materials Testing • Threshold Inspection
Building Inspection • Plan Review • Building Code Administration

LOCATIONS:
- Atlanta
- Daytona Beach
- Fort Myers
- Fort Pierce
- Gainesville
- Jacksonville
- Kissimmee
- Leesburg
- Miami
- Ocala
- Orlando (Headquarters)
- Palm Coast
- Panama City
- Pensacola
- Rockledge
- Sarasota
- Tampa
- West Palm Beach

February 15, 2023

Mr. John Hall
Hall & Ogle Architects, Inc.
208 Magnolia Avenue
Daytona Beach, Florida 32114

Reference: **GEOTECHNICAL EVALUATION**
Fire Station No. 96 Replacement
Holly Hill, Volusia County, Florida
UES Project No. 0430.2200315.0000 and UES Report No. 141214

Dear Mr. Hall:

Universal Engineering Sciences, Inc. has completed the geotechnical evaluation for the subject project. This report contains the results of our investigations, an engineering interpretation of these with respect to the project characteristics described to us, and recommendations for foundation and pavement support, and site preparation.

We appreciate the opportunity to have worked with you on this project and look forward to a continued association. Please do not hesitate to contact us if you should have any questions, or if we may further assist you as your plans proceed.

Respectfully submitted,

UNIVERSAL ENGINEERING SCIENCES

Cody Wilson, E.I.
Project Engineer

BRIAN C. POHL LICENSE NO. 60216 STATE OF FLORIDA PROFESSIONAL ENGINEER
2/15/23
Brian C. Pohl, P.E.
Branch Manager
P.E. Number 60216

Cc: Mr. Harry Newkirk, P.E. – Newkirk Engineering, Inc.

Attachments

CW/BCP/cme

Attachment: Exhibit B - Fire Station #96 Project Manual (2023-R-55 : Fire Station Construction)

UES Project No. 0430.2200315.0000
UES Report No. 141214
February 15, 2023

1.0 INTRODUCTION

1.1 GENERAL

In this report we present the results of the subsurface evaluation for the proposed fire station replacement in Holly Hill, Florida. We have divided this report into the following sections:

- SECTION 2.0 - SCOPE OF SERVICES
- SECTION 3.0 - FINDINGS
- SECTION 4.0 - FOUNDATION AREA RECOMMENDATIONS
- SECTION 5.0 - PAVEMENT AREA RECOMMENDATIONS
- SECTION 6.0 - STORMWATER DESIGN RECOMMENDATIONS
- SECTION 7.0 - CONSTRUCTION RELATED SERVICES
- SECTION 8.0 - LIMITATIONS

2.0 SCOPE OF SERVICES

2.1 PROJECT DESCRIPTION

Project information has been provided to us in discussion with you and Mr. Harry Newkirk, P.E. with Newkirk Engineering, Inc. We were provided with the layout of the proposed construction and the requested boring locations. We understand the proposed project will consist of constructing a new 6,300 square foot fire station with associated paved parking and drive areas and four (4) stormwater management facilities. We assume the column and wall loads will not exceed 50 kips and 8 kips/foot, respectively. We anticipate one to two feet of fill will be placed within the proposed structure and pavement areas.

Our recommendations are based upon the above considerations. If any of this information is incorrect, or if you anticipate any changes, inform Universal Engineering Sciences so that we may review our recommendations.

2.2 PURPOSE

The purposes of this investigation were:

- to investigate the general subsurface conditions at the site;
- to interpret and review the subsurface conditions with respect to the proposed construction; and
- to provide geotechnical engineering recommendations for foundation and pavement support and site preparation.

This report presents an evaluation of site conditions on the basis of traditional geotechnical procedures for site characterization. The recovered samples were not examined, either visually or analytically, for chemical composition or environmental hazards. Universal Engineering Sciences would be pleased to perform these services, at your request.

Attachment: Exhibit B - Fire Station #96 Project Manual (2023-R-55 : Fire Station Construction)

Our investigation was confined to the zone of soil likely to be influenced by the proposed construction. Our work did not address the potential for surface expression of deep geological conditions, such as sinkhole development related to karst activity. A deep geological evaluation requires a more extensive range of field services than performed in this study.

2.3 FIELD INVESTIGATION

2.3.1 Borings

The subsurface conditions within the proposed structure area were investigated with three (3) Standard Penetration Test (SPT) borings, B-1 through B-3, advanced to a depth of approximately 25.0 feet below existing grade. The subsurface conditions within the stormwater management facilities were investigated with four (4) SPT Borings, P-1 through P-4, advanced to 15.0 feet each below existing grade. We also performed one (1) auger boring, R-1, advanced to a depth of approximately 6.0 feet below existing grade within the proposed pavement area. We performed the SPT and auger borings according to the procedures of ASTM D-1586 and ASTM D-1452, respectively.

Samples obtained from the borings were transported to our laboratory for further evaluation. Samples of the soils encountered will be held in our laboratory for your inspection for 60 days unless we are notified otherwise.

2.4 LABORATORY INVESTIGATION

2.4.1 Index Testing

The soil samples recovered from the soil borings were returned to our laboratory and then a UES Engineer visually examined and reviewed the field descriptions. The soils were classified in accordance with the Unified Soil Classification System (USCS). We performed tests on selected soil samples consisting of 200 wash gradations to help in classification of the soils. The results of the tests are on the Boring Profiles in Appendix A.

3.0 FINDINGS

3.1 SUBSURFACE CONDITIONS

The boring locations and detailed subsurface conditions are illustrated in Appendix A: Boring Location Plan and Subsurface Profiles. The classifications and descriptions shown on the profiles are based upon visual characterizations of the recovered soil samples. Also, see Appendix A: Key to Boring Log, for further explanation of the symbols and placement of data on the Subsurface Profiles. The following discussion summarizes the soil conditions encountered.

The results of the SPT borings, B-1 through B-3 and P-1 through P-4, generally indicated approximately 12 inches topsoil underlain by intermittent layers of loose to dense fine sand (SP), fine sand with silt (SP-SM) and sandy shell to the deepest boring termination depth of approximately 25.0 feet below existing grade.

The results of the auger boring, R-1, generally indicated approximately 6 inches of topsoil underlain by fine sand (SP), to the boring termination depth of approximately 6.0 feet below existing grade.

3.2 GROUNDWATER

Attachment: Exhibit B - Fire Station #96 Project Manual (2023-R-55 : Fire Station Construction)

We recorded groundwater subsequent to drilling, at depths varying between approximately 6.0 and 11.5 feet below the ground surface. As an exception, groundwater was not encountered at Boring Location R-1. It should be noted that our evaluation was performed during a relatively dry time period. Based on available published literature, existing site features, and the results of the borings, we estimate the normal seasonal high groundwater level to be approximately two feet above the measured levels and approximately 6 feet or greater below existing grade where groundwater is not encountered. It should be noted the estimated seasonal high water level does not provide any assurance that groundwater level will not exceed these estimated levels during any given year in the future. Should impediments to surface water drainage be present, or should rainfall intensity and duration, or total rainfall quantities, exceed the normally anticipated rainfall quantities, groundwater levels might once again exceed our seasonal high estimates. The depths of the groundwater levels encountered at the boring locations are presented on the Subsurface Profiles.

We recommend positive drainage be established and maintained on the site during construction. We further recommend permanent measures be constructed to maintain positive drainage from the site throughout the life of the project.

4.0 FOUNDATION AREA RECOMMENDATIONS

4.1 GENERAL

The following recommendations are made based upon a review of the attached soil test data, our understanding of the proposed construction, and experience with similar projects and subsurface conditions. If the structural loadings, construction locations, or grading information change from those discussed previously, we request the opportunity to review and possibly amend our recommendations with respect to those changes.

Additionally, if subsurface conditions are encountered during construction which was not encountered in the borings, report those conditions immediately to us for observation and recommendations.

4.2 STRUCTURE FOUNDATIONS

4.2.1 Bearing Pressure

The maximum allowable net soil bearing pressure for shallow foundations should not exceed 2,500 pounds per square foot (psf). Net bearing pressure is defined as the soil bearing pressure at the base of the foundation in excess of the natural overburden pressure. The foundations should be designed based upon the maximum load that could be imposed by all loading conditions.

4.2.2 Foundation Size

The minimum widths recommended for any isolated column footing and continuous wall footings are 24 inches and 18 inches, respectively. Even though the maximum allowable soil bearing pressure may not be achieved, these width recommendations should control the size of the foundations.

4.2.3 Bearing Depth

Attachment: Exhibit B - Fire Station #96 Project Manual (2023-R-55 : Fire Station Construction)

The exterior foundation should bear at a depth of at least 12 inches below the exterior final grades and the interior footings should bear at a depth of at least 12 inches below the finish floor elevation to provide confinement to the bearing level soils. We recommend stormwater and surface water be diverted away from the building exterior, both during and after construction, to reduce the possibility of erosion beneath the exterior footings.

4.2.4 Bearing Material

The foundation may bear on either the compacted suitable natural soils or compacted structural fill. The bearing level soils, after compaction, should exhibit densities of at least 95 percent of the maximum dry density of the bearing soils as determined by ASTM D-1557 (Modified Proctor), to the depth described subsequently in the Site Preparation section of the report. In addition to compaction, the bearing soils must exhibit stability and be free of "pumping" conditions.

4.2.5 Settlement Estimates

Post-construction settlement of the structure will be influenced by several interrelated factors, such as (1) subsurface stratification and strength/compressibility characteristics of the bearing soils; (2) footing size, bearing level, applied loads, and resulting bearing pressures beneath the foundation; (3) site preparation and earthwork construction techniques used by the contractor, and (4) external factors, including but not limited to vibration from offsite sources and groundwater fluctuations beyond those normally anticipated for the naturally-occurring site and soil conditions which are present.

Our settlement estimates for the structure are based upon the use of successful adherence to the site preparation recommendations presented later in this report. Any deviation from these recommendations could result in an increase in the estimated post-construction settlement of the structure.

Due to the nature of the surficial soils, following the compaction operations, we expect a significant portion of settlement to be elastic in nature. This settlement is expected to occur relatively quickly, upon application of the loads, during and immediately following construction. Using the recommended maximum bearing pressure, the assumed maximum structural loads, and the field test data which we have correlated to the strength and compressibility characteristics of the subsurface soils, we estimate the total settlements of the structures to be less than one inch.

Differential settlement results from differences in applied bearing pressures and the variations in the compressibility characteristics of the subsurface soils. Based on the subsurface conditions as determined by our borings, it is anticipated that differential settlements will be within tolerable limits.

4.3 SITE PREPARATION FOR SHALLOW FOUNDATIONS

We recommend the following site preparation procedures for the structure areas:

1. Prior to construction, the location of existing underground utility lines within the construction area should be established. Provisions should then be made to relocate interfering utilities to appropriate locations. It should be noted that if underground pipes are not properly removed or plugged, they may serve as conduits for subsurface erosion which may subsequently lead to excessive settlement of the overlying structures.

2. Strip the proposed construction limits of all grass, roots, topsoil, and other deleterious materials within and 5 feet beyond the perimeter of the proposed structure. Expect initial clearing and grubbing to depths of approximately 6 to 12 inches.

Attachment: Exhibit B - Fire Station #96 Project Manual (2023-R-55 : Fire Station Construction)

3. Based on the ground water levels and anticipated fill, dewatering for foundation excavation and compaction is not anticipated. However, we recommend implementing temporary groundwater control measures if the groundwater is within two feet of the required depth of excavation at the time of construction. Dewatering measures should be the responsibility of the contractor. We recommend the groundwater control measures remain in-place until compaction of the existing soils is completed and backfilling has reached a height of 2 feet above the groundwater level at the time of construction. The site should be graded to direct surface water runoff from the construction area.

4. Compact the exposed surface using tractor/ dozer or vibratory equipment. **We recommend that vibratory equipment be operated in static mode within 75 feet of any existing structures.** The upper one foot of soils below the exposed surface within the building area should be improved to achieve a minimum compaction requirement of 95% of the Modified Proctor Test (ASTM D-1557). We recommend the compacted soils exhibit moisture content within 2 percent of the soils optimum moisture content as determined by the Modified Proctor Test (ASTM D-1557). Should the soils experience pumping and soil strength loss during the compaction operations, compaction work should be immediately terminated and (1) the disturbed soils removed and backfilled with dry structural fill soils which are then compacted, or (2) the excess moisture content within the disturbed soils allowed to dissipate before recompacting.

5. Test the compacted surface for compliance at a minimum of one location per 2,500 square feet within the building area, or at a minimum of four locations.

6. Place fill material, as required. The fill should consist of "clean," fine sand with less than 5 percent soil fines. You may use fill materials with soil fines between 5 percent and 10 percent, but strict moisture control may be required. Place fill in uniform 8 to 12-inch loose lifts and compact each lift to a minimum density of 95 percent of the Modified Proctor maximum dry density. We recommend the compacted soils exhibit moisture content within 2 percent of the soils optimum moisture content as determined by the Modified Proctor Test (ASTM D-1557). If light compaction equipment is used, we recommend the lift thickness be reduced to 8 inch thick lifts.

7. Perform compliance tests within the backfill and fill soils at a minimum of one location per 2,500 square feet per lift (minimum four locations).

8. Compact and test footing cuts for compaction to a depth of one foot below bearing level. We recommend that you test one out of every four (25 percent) column footings and perform one test per every 50 linear feet of wall footing. Compaction operations in confined areas, such as footing excavations, can best be performed with a lightweight vibratory sled or other hand-held compaction equipment.

5.0 PAVEMENT RECOMMENDATIONS

5.1 GENERAL

It is anticipated that flexible asphaltic or rigid concrete pavement will be utilized for the subject project.

5.2 FLEXIBLE ASPHALTIC PAVEMENT

Attachment: Exhibit B - Fire Station #96 Project Manual (2023-R-55 : Fire Station Construction)

Because traffic loadings are commonly unavailable, we have generalized our pavement design into two groups. The group descriptions and the recommended component thicknesses are presented in Table 1 below.

Table 1
Pavement Component Recommendations

Traffic Group	Component Thickness (Inches)		
	Stabilized Subgrade	Base Course	Surface Course
Parking lots - light duty	12	6	1.5
Parking lots - heavy duty	12	8	2.0

5.3 STABILIZED SUBGRADE

We recommend that subgrade materials be compacted in place according to the requirements in the "Site Preparation" section of this report. Further, stabilize the subgrade materials to a minimum Limerock Bearing Ratio (LBR) of 40 percent as specified by Florida Department of Transportation (FDOT) requirements for Type B Stabilized Subgrade.

Further, the stabilized subgrade can be imported material or a blend of on-site soils and imported materials. If a blend is proposed, we recommend that the contractor perform a mix design to find the optimum mix proportions.

The primary function of stabilized subgrade beneath the base course is to provide a stable and firm subgrade so that the base course can be properly placed and compacted. Depending upon the soil type, the subgrade material may have sufficient stability to provide the needed support without additional stabilizing material. Generally speaking, sands with silt or clay typically have sufficient stability and may not require additional stabilizing material. Conversely, relatively "clean" sands may not provide sufficient stability in order to adequately construct the base course.

5.4 BASE COURSE

We recommend that the base course consist of either limerock or graded crushed aggregate (crushed concrete).

5.4.1 Limerock

Limerock should have a minimum LBR of 100 percent and should be mined from an FDOT approved source. Place limerock in maximum 6-inch lifts and compact each lift to a minimum density of 98 percent of the Modified Proctor maximum dry density.

5.4.2 Crushed Concrete Base

Crushed concrete should be supplied by an approved plant with quality control procedures. The crushed concrete stockpiled should be free of sandy pockets, foreign materials, and uncrushed particles. We recommend the following specifications be enforced.

a) Crushed concrete shall not contain lumps, balls or pockets of sand or clay sized material in sufficient quantity as to be detrimental to the proper binding, finishing or strength of the crushed concrete base.

Attachment: Exhibit B - Fire Station #96 Project Manual (2023-R-55 : Fire Station Construction)

b) Samples of base course materials shall be supplied to the engineer prior to use in the work. Additional samples shall be furnished during construction, as necessary.

c) At least 97 percent (by weight) of the material shall pass a 3-1/2 inch sieve and the material shall be graded uniformly down to dust. The fine material shall consist entirely of dust or fracture. All crushing or breaking-up which might be necessary in order to meet such size requirements shall be done before the material is placed on the road.

d) The base shall be bladed and shaped to conform to the typical sections shown on the plans. Then the base shall be compacted by rolling with a combination of steel wheel and rubber tired rollers until an average density of 98 percent of the maximum density obtainable under AASHTO Method T-180 is reached. The base shall have an average LBR of not less than 150. The LBR value of material produced at a particular source shall be determined in accordance with an approved quality control procedure.

Testing shall be performed at the following frequency:

1) Perform in-place density tests on crushed concrete base at a frequency of 2 tests per pavement area or 1 test per 5,000 square feet whichever is greater

2) Perform Limerock Bearing Ratio tests at a frequency of 1 test per visual change in material and a minimum of 1 test per pavement area or every 15,000 square feet whichever is greater.

3) Engineer should perform a final visual base inspection prior to placement of prime or tack coat and paving.

5.5 SURFACE COURSE

In light duty areas where there is occasional truck traffic, but primarily passenger cars, we recommend using an asphaltic concrete, FDOT Type SP 9.5 mix. In heavy duty areas where truck traffic is predominant, we recommend using an asphaltic concrete, FDOT Type SP 12.5 mix.

It should be noted that if a more aesthetically pleasing asphalt surface is required a layer of Friction Course (FC) (finer aggregate) can be placed. A ½ inch layer of FC asphalt can be placed above the SP asphaltic concrete. However this may result in increased costs.

Asphaltic concrete mixes should be a current FDOT approved design of the materials actually used. Samples of the materials delivered to the project should be tested to verify that the aggregate gradation and asphalt content satisfies the mix design requirements. Compact the asphalt to a minimum of 90 percent of the Gmm (maximum voidless specific gravity).

After placement and field compaction, core the wearing surface to evaluate material thickness and to perform laboratory densities. Obtain cores at frequencies of at least one core per 3,000 square feet of placed pavement or a minimum of two cores per day's production.

In parking lots, for extended life expectancy of the surface course, we recommend applying a coal tar emulsion sealer at least six months after placement of the surface course. The seal coat will help to patch cracks and voids, and protect the surface from damaging ultraviolet light and automobile liquid spillage. Please note that applying the seal coat prior to six months after placement may hinder the "curing" of the surface course, leading to its early deterioration.

5.6 CURBING

Attachment: Exhibit B - Fire Station #96 Project Manual (2023-R-55 : Fire Station Construction)

We recommend that curbing around landscaped sections adjacent to the parking lots and driveways be constructed with full-depth curb sections. Using extruded curb sections which lie directly on top of the final asphalt level, or eliminating the curbing entirely, may not significantly impede the migration of irrigation water from the landscape areas to the interface between the asphalt and the base. This migration often causes separation of the wearing surface from the base and subsequent rippling and pavement deterioration. It is recommended that the subgrade below the curbing be stabilized to a minimum LBR of 40.

5.7 CONSTRUCTION TRAFFIC

Light duty roadways and incomplete pavement sections will not perform satisfactorily under construction traffic loadings. We recommend that construction traffic (construction equipment, concrete trucks, sod trucks, garbage trucks, dump trucks, etc.) be re-routed away from these roadways or that the pavement section be designed for these loadings.

5.8 EFFECTS OF GROUNDWATER

We recommend that all pavement sections analyses incorporate the seasonal high groundwater conditions. Based on the groundwater level at the site, the below separations will be maintained.

Table 2
Recommended Minimum Clearance Between
Pavement Base and Wet Season Water Table

Type of Base	Separation (inches)
Limerock	18
Crushed Concrete	12

One of the most critical influences on the pavement performance in Central Florida is the relationship between the pavement subgrade and the seasonal high groundwater level. Many roadways and parking areas have been destroyed as a result of deterioration of the base and the base/surface course bond resulting from a high water table. **Regardless of the type of base selected, we recommend that the seasonal high groundwater and the bottom of the base course be separated by at least the amount presented in Table 2 above.**

5.9 CONCRETE "RIGID" PAVEMENTS

Concrete pavement is a rigid pavement that is strong, durable and handles heavy loads more effectively than asphalt pavement

We recommend using the existing surficial sands or approved structural fill densified to at least 98 percent of Modified Proctor test maximum dry density (ASTM D 1557) without additional stabilization under concrete pavement, with the following stipulations:

1. Prior to placement of concrete, the subgrade soils should be densified as recommended in Section 5.10 of this report.

2. The surface of the subgrade soils must be smooth, and any disturbances or wheel rutting corrected prior to placement of concrete.

3. The subgrade soils must be moistened prior to placement of concrete.

Attachment: Exhibit B - Fire Station #96 Project Manual (2023-R-55 : Fire Station Construction)

4. Concrete pavement thickness should be uniform throughout, with exception to the thickened edges (curb or footing).

5. The bottom of the pavement should be separated from the seasonal high groundwater level by at least 12 Inches.

Based on review of the FDOT Rigid Pavement Design Manual and provided that the site is prepared as recommended in this report, we recommend using at least the minimum design shown in the following table for concrete pavements.

Table 3
Minimum Concrete Pavement Thickness

Minimum Pavement Thickness	Maximum Control Joint Spacing	Recommended Saw Cut Depth
6 inches	12 feet x 12 feet	2.0 inches
7 inches	14 feet x 14 feet	2.3 inches

For loading conditions greater than those presented in the above table, we recommend that you have a complete pavement design performed based on projected traffic data.

We recommend using concrete with a minimum 28-day compressive strength of at least 4000 pounds per square inch. Layout of the saw cut control joints should form square panels, and the depth of Saw cut joints should be made to a depth of ⅓ of the concrete slab thickness.

We recommend allowing Universal to review and comment on the final concrete pavement design, including section and joint details (type of joints, joint spacing, etc.), prior to the start of construction.

For further details on concrete pavement construction, please reference the "Guide to Jointing of Non-Reinforced Concrete Pavements" published by the Florida Concrete and Products Association, Inc., and "Building Quality Concrete Parking Areas", published by the Portland Cement Association.

Specimens should be obtained to verify the compressive strength of the pavement concrete at least every 50 cubic yards, or at least once for each day's placement, whichever is greater.

5.10 SITE PREPARATION FOR PAVEMENTS

We recommend the following site preparation procedures:

1. Strip the proposed construction limits of all grass, roots, topsoil and other deleterious materials within, and 3 feet beyond, the proposed pavement limits. Expect initial clearing and grubbing to depths of approximately 6 to12-inches.

2. Proof-compact the exposed surface using tractor/ dozer or vibratory equipment until you maintain density of at least 95 percent of the Modified Proctor maximum dry density (ASTM D-1557) to a depth of 1 foot below the exposed surface, with the exception that densities of at least 98 percent should be obtained in the upper 12 inches below base course. We recommend the compacted soils exhibit moisture content within 2 percent of the soils optimum moisture content as determined by the Modified Proctor Test (ASTM D-1557). Should the soils experience pumping and soil strength loss during the compaction operations, compaction work should be immediately terminated and (1) the disturbed soils

Attachment: Exhibit B - Fire Station #96 Project Manual (2023-R-55 : Fire Station Construction)

removed and backfilled with dry structural fill soils which are then compacted, or (2) the excess moisture content within the disturbed soils allowed to dissipate before recompacting.

3. Test the compacted surface for density at a frequency of not less than one test per 10,000 square feet of pavement area (minimum three locations).

4. Place and compact backfill material, as required. The fill should consist of "clean," fine sand with less than 5 percent soil fines. You may use fill materials with soil fines between 5 percent and 10 percent, but strict moisture control may be required. Place fill in uniform 10 to 12-inch loose lifts and compact each lift to a minimum density of 95 percent of the Modified Proctor maximum dry density with the exception that densities of at least 98 percent should be obtained within the upper one foot below base course. We recommend the compacted soils exhibit moisture content within 2 percent of the soils optimum moisture content as determined by the Modified Proctor Test (ASTM D-1557).

5. Perform compliance tests within each lift of fill at a frequency of not less than one test per 10,000 square feet of pavement area (minimum of three locations).

6.0 STORMWATER DESIGN RECOMMENDATIONS

6.1 GENERAL

For a dry bottom retention facility, performance will be significantly influenced by the soil permeability and the vertical separation between the bottom and the seasonal high groundwater level. A wet retention facility should be excavated to a depth necessary to obtain a sufficient water depth to limit growth of aquatic vegetation.

If requested, UES can assist in evaluating the facility design exfiltration rates, underdrains and/or groundwater baseflow as pond geometry and stormwater volume requirements become available.

6.2 SOIL PERMEABILITY

Nine (9) Laboratory Falling-head Saturated Vertical Permeability Tests were performed on relatively undisturbed soil sample. The sample was obtained using thin-walled tube sampling techniques (Shelby Tube). The results of the test, in feet per day, describe the coefficient of hydraulic conductivity (Permeability) of the soil and are presented on the attached Subsurface Profiles. The measured permeability rate should not be construed to represent the actual pond exfiltration rates.

Upon evaluation of regional and local geology, we have evaluated that the characteristics of the soils within the vicinity of this project are comprised of sedimentary soils which often exhibit thin, alternating layers. Generally, in relatively homogeneous natural deposits where stratification may result from particle orientation, the Permeability in the Horizontal direction can be somewhat greater than that in the Vertical direction. Based on our experience, the estimated coefficient of Horizontal Permeability typically is on the order of 1.5 and 2.0 times greater than the Vertical Permeability for SP-SM and SP soil types, respectively.

7.0 CONSTRUCTION RELATED SERVICES

Attachment: Exhibit B - Fire Station #96 Project Manual (2023-R-55 : Fire Station Construction)

We recommend the owner retain Universal Engineering Sciences to perform construction materials tests and observations on this project. Field tests and observations include verification of foundation subgrades by monitoring filling operations and performing quality assurance tests on the placement of compacted natural soils and structural fill. We can also perform concrete testing, pavement section testing, structural steel testing and other construction materials testing services.

The geotechnical engineering design does not end with the advertisement of the construction documents. The design is an on-going process throughout construction. Because of our familiarity with the site conditions and the intent of the engineering design, we are most qualified to address problems that might arise during construction in a timely and cost-effective manner.

8.0 LIMITATIONS

During the early stages of most construction projects, geotechnical issues not addressed in this report may arise. Because of the natural limitations inherent in working with the subsurface, it is not possible for a geotechnical engineer to predict and address all possible problems. An Association of Engineering Firms Practicing in the Geosciences (ASFE) publication, "Important Information about Your Geotechnical Engineering Report" appears in Appendix C, and will help explain the nature of geotechnical issues. Further, we present documents in Appendix C: Constraints and Restrictions, to bring to your attention the potential concerns and the basic limitations of a typical geotechnical report.

Attachment: Exhibit B - Fire Station #96 Project Manual (2023-R-55 : Fire Station Construction)

APPENDIX A

BORING LOCATION PLAN
SUBSURFACE PROFILES
SOILS CLASSIFICATION CHART

Attachment: Exhibit B - Fire Station #96 Project Manual (2023-R-55 : Fire Station Construction)



LEGEND

△ APPROXIMATE LOCATION OF AUGER BORING

APPROXIMATE LOCATION OF STANDARD PENETRATION TEST (SPT) BORING

GRAPHIC SCALE

0 30 60

(IN FEET)

1 INCH ≈ 60 ft.

UNIVERSAL ENGINEERING SCIENCES

TITLE: BORING LOCATION PLAN			SCALE: 1" ≈ 60'
PROJECT: GEOTECHNICAL EVALUATION FIRE STATION #96 REPLACEMENT HOLLY HILL, FLORIDA			PAGE/FIG. NO: A-1
DRAWN BY: MKL	DATE: 02/15/23	PROJECT NO.: 0430.2200315.0000	
CHECKED BY: BP	DATE: 02/15/23	REPORT NO.: 141214	

Attachment: Exhibit B - Fire Station #96 Project Manual (2023-R-55 : Fire Station Construction)

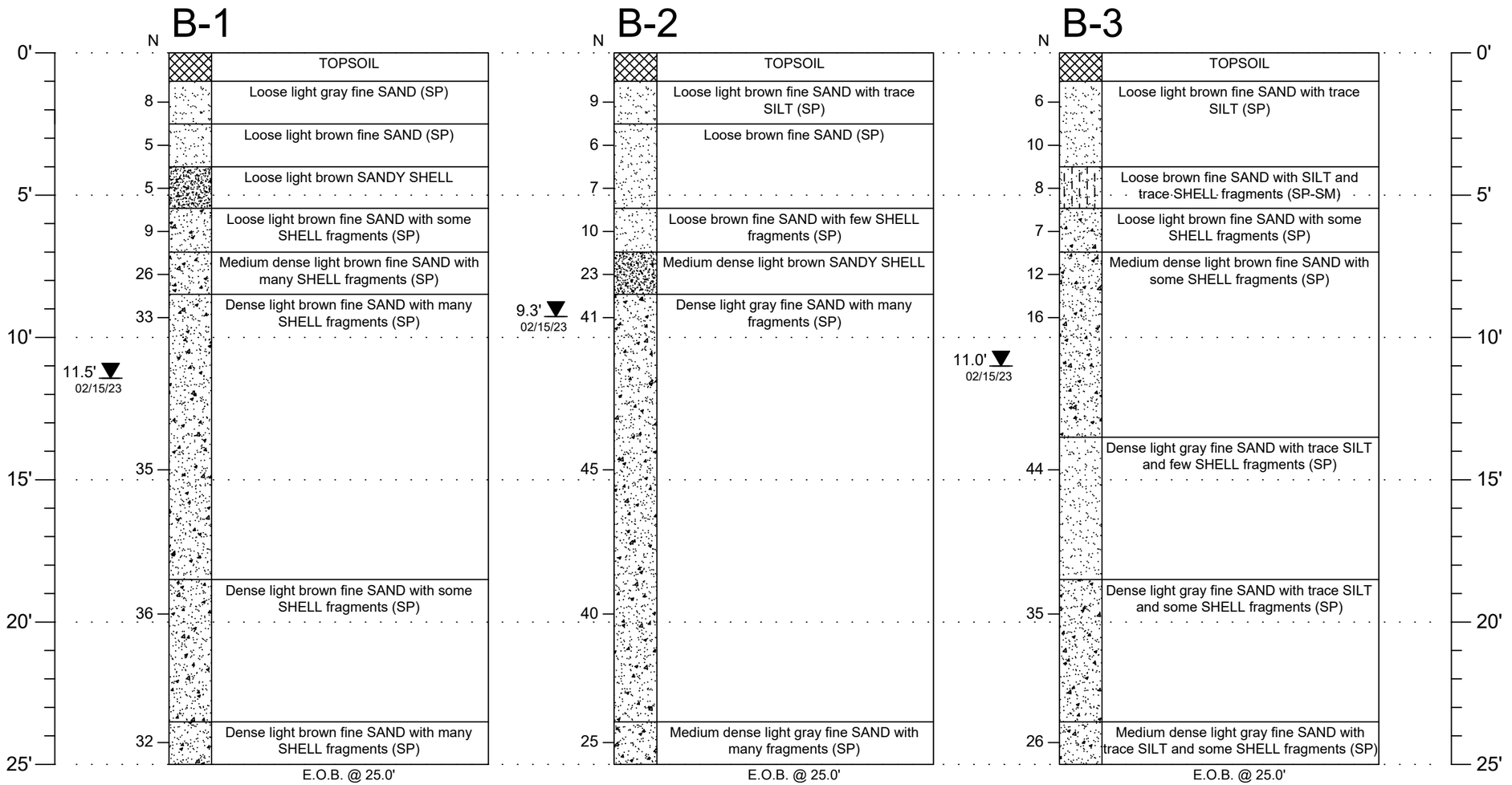

Fine SAND (SP)

Fine SAND with some to many SHELL fragments (SP)

SHELL

Fine SAND with SILT (SP-SM)

TOPSOIL

NOTES:

▼	Measured Groundwater Level 24 (+) Hours Subsequent to Time of Drilling
(SP)	Unified Soil Classification System
EOB	End of Boring
N	Penetr. Resistance, Blows/ft.
HA	Hand Auger Method
WOH	Weight of Hammer
Kv	Coefficient of Permeability, (ft/day)
-200	% Passing No. 200 Sieve

UNIVERSAL ENGINEERING SCIENCES

PROJECT:
GEOTECHNICAL EVALUATION
FIRE STATION #96 REPLACEMENT
HOLLY HILL, FLORIDA

TITLE:
SUBSURFACE PROFILES

DRAWN BY:	MKL	DATE: 02/15/23	PROJECT NO.: 0430.2200315.0000	SCALE: NA (in feet)	PAGE/FIG. NO.: A-2
CHECKED BY:	BP	DATE: 02/15/23	REPORT NO.: 141214		

Attachment: Exhibit B - Fire Station #96 Project Manual (2023-R-55 : Fire Station Construction)

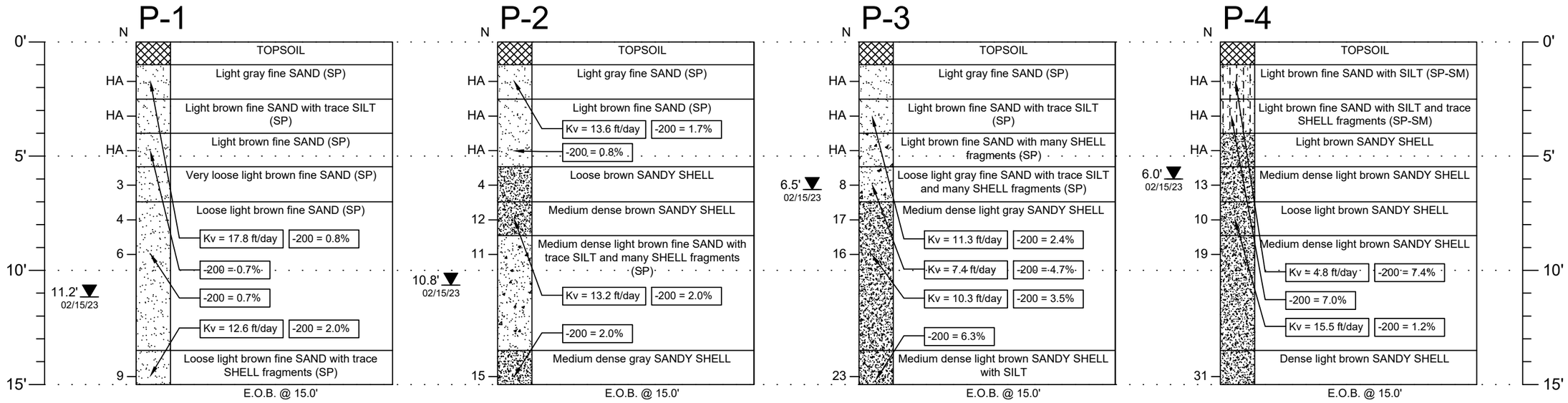

Fine SAND (SP)

Fine SAND with some to many SHELL fragments (SP)

SHELL

Fine SAND with SILT (SP-SM)

TOPSOIL

NOTES:

▼	Measured Groundwater Level 24 (+) Hours Subsequent to Time of Drilling
(SP)	Unified Soil Classification System
EOB	End of Boring
N	Penetr. Resistance, Blows/ft.
HA	Hand Auger Method
WOH	Weight of Hammer
Kv	Coefficient of Permeability, (ft/day)
-200	% Passing No. 200 Sieve

UNIVERSAL ENGINEERING SCIENCES

PROJECT:
GEOTECHNICAL EVALUATION
FIRE STATION #96 REPLACEMENT
HOLLY HILL, FLORIDA

TITLE:
SUBSURFACE PROFILES

DRAWN BY: MKL	DATE: 02/15/23	PROJECT NO.: 0430.2200315.0000	SCALE: NA (in feet)	PAGE/FIG. NO.: A-3
CHECKED BY: BP	DATE: 02/15/23	REPORT NO.: 141214		

Attachment: Exhibit B - Fire Station #96 Project Manual (2023-R-55 : Fire Station Construction)

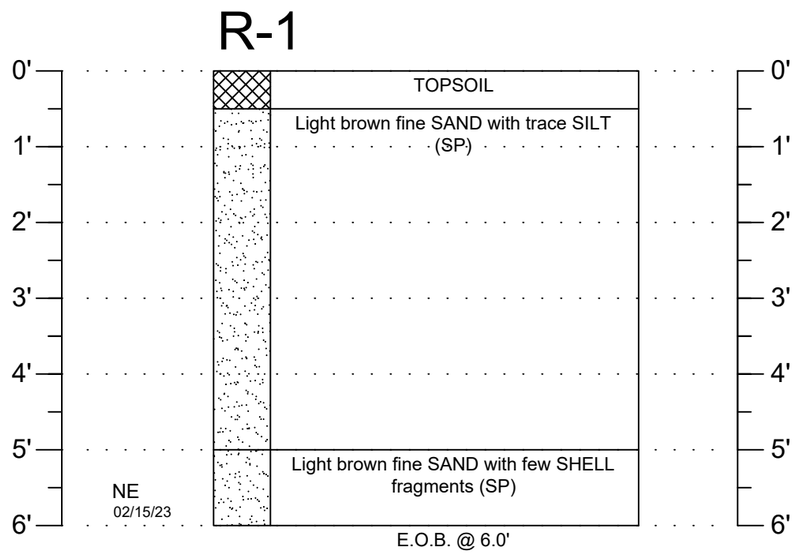

Fine SAND (SP)

TOPSOIL

NOTES:

▼	Measured Groundwater Level 24 (+) Hours Subsequent to Time of Drilling
(SP)	Unified Soil Classification System
EOB	End of Boring
NE	Groundwater Not Encountered
Kv	Coefficient of Permeability, (ft/day)
-200	% Passing No. 200 Sieve

UNIVERSAL ENGINEERING SCIENCES

PROJECT: GEOTECHNICAL EVALUATION FIRE STATION #96 REPLACEMENT HOLLY HILL, FLORIDA				TITLE: SUBSURFACE PROFILES	
DRAWN BY: MKL	DATE: 02/15/23	PROJECT NO.: 0430.2200315.0000		SCALE: NA (in feet)	PAGE/FIG. NO.: A-4
CHECKED BY: BP	DATE: 02/15/23	REPORT NO.: 141214			

Attachment: Exhibit B - Fire Station #96 Project Manual (2023-R-55 : Fire Station Construction)

UNIVERSAL
ENGINEERING SCIENCES

KEY TO BORING LOGS

SYMBOLS

SYMBOL	DESCRIPTION
N	No. of blows of a 140-lb weight falling 30 inches required to drive standard spoon 1 foot.
WOR	Weight of Drill Rods
WOH	Weight of Drill Rods and Hammer
% REC	Percent Core Recovery from Rock Core Drilling
RQD	Rock Quality Designation
EOB	End Of Boring
BT	Boring Terminated
-200	Fines Content or % Passing N0. 200 Sieve
MC	Moisture Content
LL	Liquid Limit
PI	Plasticity Index
K	Coefficient of Permeability
O.C.	Organic Content
▽	Estimated seasonal high groundwater level
▼	Measured groundwater level at time of drilling

RELATIVE DENSITY
(sand-silt)

Very Loose - Less Than 4 Blows/Ft.
Loose - 4 to 10 Blows/Ft.
Medium - 11 to 30 Blows/Ft.
Dense - 31 to 50 Blows/Ft.
Very Dense - More Than 50 Blows/Ft.

CONSISTENCY
(clay)

Very Soft - Less than 2 Blows/Ft.
Soft - 2 to 4 Blows/Ft.
Medium - 5 to 8 Blows/Ft.
Stiff - 9 to 15 Blows/Ft.
Very Stiff - 16 to 30 Blows/Ft.
Hard - More Than 30 Blows/Ft.

RELATIVE HARDNESS
(Limestone)

Soft - 100 Blows for more than 2"
Hard - 100 Blows for less than 2"

UNIFIED CLASSIFICATION SYSTEM

MAJOR DIVISIONS			GROUP SYMBOLS	TYPICAL NAMES
COARSE-GRAINED SOILS More than 50% retained on No. 200 sieve*	GRAVELS 50% or more of coarse fraction retained on No. 4 sieve	CLEAN GRAVELS	GW	Well-graded gravels and gravel-sand mixtures, little or no fines
			GP	Well-graded gravels and gravel-sand mixtures, little or no fines
		GRAVELS WITH FINES	GM	Silty gravels, gravel-sand-silt mixtures
			GC	Clayey gravels, gravel-sand-clay mixtures
	SANDS More than 50% of coarse fraction passes No. 4 sieve	CLEAN SANDS	SW**	Well-graded sands and gravelly sands, little or no fines
			SP**	Well-graded sands and gravelly sands, little or no fines
		SANDS WITH FINES	SM**	Silty sands, sand-silt mixtures
			SC**	Clayey sands, sand-clay mixtures
FINE-GRAINED SOILS 50% or more passes No. 200 sieve*	SILTS AND CLAYS Liquid limit 50% or less		ML	Inorganic silts, very fine sands, rock flour, silty or clayey fine sands
			CL	Inorganic clays of low to medium plasticity, gravelly clays, sandy clays, silty clays, lean clays
			OL	Organic silts and organic silty clays of low plasticity
	SILTS AND CLAYS Liquid limit greater than 50%		MH	Inorganic silts, micaceous or diatomaceous fine sands or silts, elastic silts
			CH	Organic clays or high plasticity, fat clays
			OH	Organic clays of medium to high plasticity
			PT	Peat, muck and other highly organic soils

* Based on the material passing the 3-in. (75 mm) sieve.
** Use dual symbol (such as, SP-SM and SP-SC) for soil with more than 5% but less than 12% passing through No. 200 sieve.

MODIFIERS

These modifiers provide our estimate of the amount of minor constituents (SILT or CLAY sized particles) in the soil sample.
Trace - 5% or less
With SILT or with CLAY - 6% to 11%
SILTY or CLAYEY - 12% to 30%
Very SILTY or Very CLAYEY - 31% to 50%

These modifiers provide our estimate of the amount of organic components in the soil sample.
Trace - 1% to 2%
Few - 3% to 4%
Some - 5% to 8%
Many - Greater than 8%

These modifiers provide our estimate of the amount of other components (Shell, Gravel, Etc.) in the soil sample
Trace - 5% or less
Few - 6% to 12%
Some - 13% to 30%
Many - 31% to 50%

Attachment: Exhibit B - Fire Station #96 Project Manual (2023-R-55 : Fire Station Construction)

APPENDIX B

LABORATORY TESTING PROCEDURES

Attachment: Exhibit B - Fire Station #96 Project Manual (2023-R-55 : Fire Station Construction)

DESCRIPTION OF LABORATORY TESTING PROCEDURES

LABORATORY PERMEABILITY TEST

The laboratory permeability test is a Falling Head Test that is performed on soil samples recovered from this site. The data recovered from this test are used to calculate Darcy's Coefficient of Permeability (k) of the soil.

WASH 200 TEST

The Wash 200 test is performed by passing a representative soil sample over a No. 200 sieve and rinsing with water. The percentage of the soil grains passing this sieve is then calculated.

ORGANIC CONTENT TESTS

The organic content test is performed by weighing a sample before and after placing in a high temperature oven which burns the organic material in the sample. The percent of organic material by weight is then calculated.

MOISTURE CONTENT DETERMINATION ASTM D-2216

Moisture content is the ratio of the weight of water to the dry weight of soil. Moisture content is measured by drying a sample at 105 degrees Celsius. The moisture content is expressed as a percent of the oven dried soil mass.

ATTERBERG LIMITS

The Atterberg Limits consist of the Liquid Limit (LL) and the Plastic Limit (PL). The LL and PL were determined in general accordance with the latest revision of ASTM D-4318. The LL is the water content of the material denoting the boundary between the liquid and plastic states. The PL is the water content denoting the boundary between the plastic and semi-solid states. The Plasticity Index (PI) is the range of water content over which a soil behaves plastically and is denoted numerically by as the difference between the LL and the PL. The water content of the sample tested was determined in general accordance with the latest revision of ASTM D-2216. The water content is defined as the ratio of "pore" or "free" water in a given mass of material to the mass of solid material particles.

CONSOLIDATION TESTING

A single selected portion of the undisturbed sample was extruded from the 3-inch diameter sample tube for consolidation testing. The selected sample was trimmed and confined into a stainless steel disc having a diameter of 2.5 inches and a height of 1 inch. The disc was then "sandwiched" between 2 porous stones, saturated and subjected to incrementally increasing loads. The resulting deformation of the sample within the steel disc was measured using a micrometer gauge.

Attachment: Exhibit B - Fire Station #96 Project Manual (2023-R-55 : Fire Station Construction)

APPENDIX C

GENERAL CONDITIONS
CONSTRAINTS AND RESTRICTIONS AND
IMPORTANT INFORMATION ABOUT YOUR
GEOTECHNICAL ENGINEERING REPORT

Attachment: Exhibit B - Fire Station #96 Project Manual (2023-R-55 : Fire Station Construction)

SECTION 1: RESPONSIBILITIES **1.1** *Universal Engineering Sciences, LLC*, and its subsidiaries and affiliated companies ("UES"), is responsible fo providing the services described under the Scope of Services. The term "UES" as used herein includes all of UES's agents, employees, professional staff, an subcontractors. **1.2** The Client or a duly authorized representative is responsible for providing UES with a clear understanding of the project nature and scope The Client shall supply UES with sufficient and adequate information, including, but not limited to, maps, site plans, reports, surveys, plans and specifications and designs, to allow UES to properly complete the specified services. The Client shall also communicate changes in the nature and scope of the project a soon as possible during performance of the work so that the changes can be incorporated into the work product. **1.3** The Client acknowledges that UES' responsibilities in providing the services described under the Scope of Services section is limited to those services described therein, and the Client hereb assumes any collateral or affiliated duties necessitated by or for those services. Such duties may include, but are not limited to, reporting requirements impose by any third party such as federal, state, or local entities, the provision of any required notices to any third party, or the securing of necessary permits c permissions from any third parties required for UES's provision of the services so described, unless otherwise agreed upon by both parties in writing.

SECTION 2: STANDARD OF CARE **2.1** Services performed by UES under this Agreement will be conducted in a manner consistent with the level of car and skill ordinarily exercised by members of UES's profession practicing contemporaneously under similar conditions in the locality of the project. No othe warranty, express or implied, is made. **2.2** Execution of this document by UES is not a representation that UES has visited the site, become generally familia with local conditions under which the work is to be performed, or correlated personal observations with the requirements of the Scope of Services. It is th Client's responsibility to provide UES with all information necessary for UES to provide the services described under the Scope of Services, and the Clier assumes all liability for information not provided to UES that may affect the quality or sufficiency of the services so described.

SECTION 3: SITE ACCESS AND SITE CONDITIONS **3.1** Client will grant or obtain free access to the site for all equipment and personnel necessary for UE to perform the work set forth in this Agreement. The Client will notify any possessors of the project site that Client has granted UES free access to the site UES will take reasonable precautions to minimize damage to the site, but it is understood by Client that, in the normal course of work, some damage ma occur, and the correction of such damage is not part of this Agreement unless so specified in the Scope of Services. **3.2** The Client is responsible for th accuracy of locations for all subterranean structures and utilities. UES will take reasonable precautions to avoid known subterranean structures, and the Clier waives any claim against UES, and agrees to defend, indemnify, and hold UES harmless from any claim or liability for injury or loss, including costs of defense arising from damage done to subterranean structures and utilities not identified or accurately located. In addition, Client agrees to compensate UES for an time spent or expenses incurred by UES in defense of any such claim with compensation to be based upon UES's prevailing fee schedule and expens reimbursement policy.

SECTION 4: BILLING AND PAYMENT **4.1** UES will submit invoices to Client monthly or upon completion of services. Invoices will show charges for differer personnel and expense classifications. **4.2** Payment is due 30 days after presentation of invoice and is past due 31 days from invoice date. Client agrees t pay a finance charge of one and one-half percent (1 ½ %) per month, or the maximum rate allowed by law, on past due accounts. **4.3** If UES incurs an expenses to collect overdue billings on invoices, the sums paid by UES for reasonable attorneys' fees, court costs, UES's time, UES's expenses, and interes will be due and owing by the Client.

SECTION 5: OWNERSHIP AND USE OF DOCUMENTS **5.1** All reports, boring logs, field data, field notes, laboratory test data, calculations, estimates, an other documents prepared by UES, as instruments of service, shall remain the property of UES. Neither Client nor any other entity shall change or modif UES's instruments of service. **5.2** Client agrees that all reports and other work furnished to the Client or his agents, which are not paid for, will be returne upon demand and will not be used by the Client for any purpose. **5.3** UES will retain all pertinent records relating to the services performed for a period of fiv years following submission of the report or completion of the Scope of Services, during which period the records will be made available to the Client in reasonable time and manner. **5.4** All reports, boring logs, field data, field notes, laboratory test data, calculations, estimates, and other documents prepared b UES, are prepared for the sole and exclusive use of Client, and may not be given to any other entity, or used or relied upon by any other entity, without th express written consent of UES. Client is the only entity to which UES owes any duty or duties, in contract or tort, pursuant to or under this Agreement.

SECTION 6: DISCOVERY OF UNANTICIPATED HAZARDOUS MATERIALS **6.1** Client represents that a reasonable effort has been made to inform UES c known or suspected hazardous materials on or near the project site. **6.2** Under this agreement, the term hazardous materials include hazardous materials hazardous wastes, hazardous substances (40 CFR 261.31, 261.32, 261.33), petroleum products, polychlorinated biphenyls, asbestos, and any other materi defined by the U.S. EPA as a hazardous material. **6.3** Hazardous materials may exist at a site where there is no reason to believe they are present. Th discovery of unanticipated hazardous materials constitutes a changed condition mandating a renegotiation of the scope of work. The discovery of unanticipate hazardous materials may make it necessary for UES to take immediate measures to protect health and safety. Client agrees to compensate UES for an equipment decontamination or other costs incident to the discovery of unanticipated hazardous materials. **6.4** UES will notify Client when unanticipate hazardous materials or suspected hazardous materials are encountered. Client will make any disclosures required by law to the appropriate governin agencies. Client will hold UES harmless for all consequences of disclosures made by UES which are required by governing law. In the event the project site i not owned by Client, Client it is the Client's responsibility to inform the property owner of the discovery of unanticipated hazardous materials or suspecte hazardous materials. **6.5** Notwithstanding any other provision of the Agreement, Client waives any claim against UES, and to the maximum extent permitte by law, agrees to defend, indemnify, and save UES harmless from any claim, liability, and/or defense costs for injury or loss arising from UES's discovery c unanticipated hazardous materials or suspected hazardous materials including any costs created by delay of the project and any cost associated with possibl reduction of the property's value. Client will be responsible for ultimate disposal of any samples secured by UES which are found to be contaminated.

SECTION 7: RISK ALLOCATION **7.1** Client agrees that UES's liability for any damage on account of any breach of contract, error, omission, or professiona negligence will be limited to a sum not to exceed $50,000 or UES's fee, whichever is greater. If Client prefers to have higher limits on contractual or professiona liability, UES agrees to increase the limits up to a maximum of $1,000,000.00 upon Client's written request at the time of accepting UES's proposal provide that Client agrees to pay an additional consideration of four percent of the total fee, or $400.00, whichever is greater. If Client prefers a $2,000,000.00 limit o contractual or professional liability, UES agrees to increase the limits up to a maximum of $2,000,000.00 upon Client's written request at the time of acceptin UES's proposal provided that Client agrees to pay an additional consideration of four percent of the total fee, or $800.00, whichever is greater. The additiona charge for the higher liability limits is because of the greater risk assumed and is not strictly a charge for additional professional liability insurance. **7.2** Clier shall not be liable to UES and UES shall not be liable to Client for any incidental, special, or consequential damages (including lost profits, loss of use, an lost savings) incurred by either party due to the fault of the other, regardless of the nature of the fault, or whether it was committed by Client or UES, the employees, agents, or subcontractors; or whether such liability arises in breach of contract or warranty, tort (including negligence), statutory, or any othe cause of action. **7.3** As used in this Agreement, the terms "claim" or "claims" mean any claim in contract, tort, or statute alleging negligence, errors, omissions strict liability, statutory liability, breach of contract, breach of warranty, negligent misrepresentation, or any other act giving rise to liability.

SECTION 8: INSURANCE **8.1** UES represents it and its agents, staff and consultants employed by UES, is and are protected by worker's compensatio insurance and that UES has such coverage under public liability and property damage insurance policies which UES deems to be adequate. Certificates fo all such policies of insurance shall be provided to Client upon request in writing. Within the limits and conditions of such insurance, UES agrees to indemnif and save Client harmless from and against loss, damage, or liability arising from negligent acts by UES, its agents, staff, and consultants employed by it. UE shall not be responsible for any loss, damage or liability beyond the amounts, limits, and conditions of such insurance or the limits described in Section 7, whichever is less. The Client agrees to defend, indemnify, and save UES harmless for loss, damage or liability arising from acts by Client, Client's agents, staff, and others employed by Client. **8.2** Under no circumstances will UES indemnify Client from or for Client's own actions, negligence, or bre

Attachment: Exhibit B - Fire Station #96 Project Manual (2023-R-55 : Fire Station Construction)

To the extent damages are covered by property insurance, Client and UES waive all rights against each other and against the contractors, consulta and employees of the other for damages, except such rights as they may have to the proceeds of such insurance.

SECTION 9: DISPUTE RESOLUTION **9.1** All claims, disputes, and other matters in controversy between UES and Client arising out of or in any way related to this Agreement will be submitted to mediation or non-binding arbitration, before and as a condition precedent to other remedies provided by law. **9.2** If dispute arises and that dispute is not resolved by mediation or non-binding arbitration, then: (a) the claim will be brought in the state or federal courts havin jurisdiction where the UES office which provided the service is located; and (b) the prevailing party will be entitled to recovery of all reasonable costs incurre including staff time, court costs, attorneys' fees, expert witness fees, and other claim related expenses.

SECTION 10: TERMINATION **10.1** This agreement may be terminated by either party upon seven (7) days written notice in the event of substantial failure b the other party to perform in accordance with the terms hereof, or in the case of a force majeure event such as terrorism, act of war, public health or othe emergency. Such termination shall not be effective if such substantial failure or force majeure has been remedied before expiration of the period specified i the written notice. In the event of termination, UES shall be paid for services performed to the termination notice date plus reasonable termination expense **10.2** In the event of termination, or suspension for more than three (3) months, prior to completion of all reports contemplated by the Agreement, UES ma complete such analyses and records as are necessary to complete its files and may also complete a report on the services performed to the date of notice termination or suspension. The expense of termination or suspension shall include all direct costs of UES in completing such analyses, records, and reports

SECTION 11: REVIEWS, INSPECTIONS, TESTING, AND OBSERVATIONS **11.1** Plan review, private provider inspections, and building inspections are performed for the purpose of observing compliance with applicable building codes. Threshold inspections are performed for the purpose of observing compliance with an approved threshold inspection plan. Construction materials testing ("CMT") is performed to document compliance of certain materials or components with applicable testing standards. UES's performance of plan reviews, private provider inspections, building inspections, threshold inspections, or CMT, or UES's presence on the site of Client's project while performing any of the foregoing activities, is not a representation or warranty by UES that Client's project is free of errors in either design or construction. **11.2** If UES is retained to provide construction monitoring or observation, UES will report to Client any observed work which, in UES's opinion, does not conform to the plans and specifications provided to UES. UES shall have no authority to reject or terminate the work of any agent or contractor of Client. No action, statements, or communications of UES, or UES's site representative, can be construed as modifying any agreement between Client and others. UES's performance of construction monitoring or observation is not a representation or warranty by UES that Client's project is free of errors in either design or construction. **11.3** Neither the activities of UES pursuant to this Agreement, nor the presence of UES or its employees, representatives, or subcontractors on the project site, shall be construed to impose upon UES any responsibility for means or methods of work performance, superintendence, sequencing of construction, or safety conditions at the project site. Client acknowledges that Client or its contractor is solely responsible for project jobsite safety. **11.4** Client is responsible for scheduling all inspections and CMT activities of UES. All testing and inspection services will be performed on a will-call basis. UES will not be responsible for tests and inspections that are not performed due to Client's failure to schedule UES's services on the project, or for any claims or damages arising from tests and inspections that are not scheduled or performed.

SECTION 12: ENVIRONMENTAL ASSESSMENTS Client acknowledges that an Environmental Site Assessment ("ESA") is conducted solely to permit UES to render a professional opinion about the likelihood or extent of regulated contaminants being present on, in, or beneath the site in question at the time services were conducted. No matter how thorough an ESA study may be, findings derived from the study are limited and UES cannot know or state for a fact that a site is unaffected by reportable quantities of regulated contaminants as a result of conducting the ESA study. Even if UES states that reportable quantities of regulated contaminants are not present, Client still bears the risk that such contaminants may be present or may migrate to the site after the ESA study is complete.

SECTION 13: SUBSURFACE EXPLORATIONS **13.1** Client acknowledges that subsurface conditions may vary from those observed at locations wher borings, surveys, samples, or other explorations are made, and that site conditions may change with time. Data, interpretations, and recommendations b UES will be based solely on information available to UES at the time of service. UES is responsible for those data, interpretations, and recommendations, bu will not be responsible for other parties' interpretations or use of the information developed or provided by UES. **13.2** Subsurface explorations may result i unavoidable cross-contamination of certain subsurface areas, as when a probe or boring device moves through a contaminated zone and links it to an aquife underground stream, or other hydrous body not previously contaminated. UES is unable to eliminate totally cross-contamination risk despite use of due care Since subsurface explorations may be an essential element of UES's services indicated herein, Client shall, to the fullest extent permitted by law, waive an claim against UES, and indemnify, defend, and hold UES harmless from any claim or liability for injury or loss arising from cross-contamination alleged caused by UES's subsurface explorations. In addition, Client agrees to compensate UES for any time spent or expenses incurred by UES in defense of an such claim with compensation to be based upon UES's prevailing fee schedule and expense reimbursement policy.

SECTION 14: SOLICITATION OF EMPLOYEES Client agrees not to hire UES's employees except through UES. In the event Client hires a UES employee within one year following any project through which Client had contact with said employee, Client shall pay UES an amount equal to one-half of the employee's annualized salary, as liquidated damages, without UES waiving other remedies it may have.

SECTION 15: ASSIGNS Neither Client nor UES may delegate, assign, sublet, or transfer its duties or interest in this Agreement without the written conse of the other party.

SECTION 16: GOVERNING LAW AND SURVIVAL **16.1** This Agreement shall be governed by and construed in accordance with the laws of the jurisdictio in which the UES office performing the services hereunder is located. **16.2** In any of the provisions of this Agreement are held illegal, invalid, or unenforceable the enforceability of the remaining provisions will not be impaired and will survive. Limitations of liability and indemnities will survive termination of this agreeme for any cause.

SECTION 17: INTEGRATION CLAUSE **17.1** This Agreement represents and contains the entire and only agreement and understanding among the partie with respect to the subject matter of this Agreement, and supersedes any and all prior and contemporaneous oral and written agreements, understandings representations, inducements, promises, warranties, and conditions among the parties. No agreement, understanding, representation, inducement, promise warranty, or condition of any kind with respect to the subject matter of this Agreement shall be relied upon by the parties unless expressly incorporated herei **17.2** This Agreement may not be amended or modified except by an agreement in writing signed by the party against whom the enforcement of any modificatio or amendment is sought.

SECTION 18: WAIVER OF JURY TRIAL Both Client and UES waive trial by jury in any action arising out of or related to this Agreement.

SECTION 19: INDIVIDUAL LIABILTY PURSUANT TO FLORIDA STAT. 558.0035, AN INDIVIDUAL EMPLOYEE OR AGENT OF UES MAY NOT BE HELD INDIVIDUALLY LIABLE FOR NEGLIGENCE.

Important Information about This

Geotechnical-Engineering Report

Subsurface problems are a principal cause of construction delays, cost overruns, claims, and disputes.

While you cannot eliminate all such risks, you can manage them. The following information is provided to help.

Geotechnical Services Are Performed for Specific Purposes, Persons, and Projects

Geotechnical engineers structure their services to meet the specific needs of their clients. A geotechnical-engineering study conducted for a civil engineer may not fulfill the needs of a constructor — a construction contractor — or even another civil engineer. Because each geotechnical- engineering study is unique, each geotechnical-engineering report is unique, prepared *solely* for the client. No one except you should rely on this geotechnical-engineering report without first conferring with the geotechnical engineer who prepared it. *And no one — not even you* — should apply this report for any purpose or project except the one originally contemplated.

Read the Full Report

Serious problems have occurred because those relying on a geotechnical-engineering report did not read it all. Do not rely on an executive summary. Do not read selected elements only.

Geotechnical Engineers Base Each Report on a Unique Set of Project-Specific Factors

Geotechnical engineers consider many unique, project-specific factors when establishing the scope of a study. Typical factors include: the client's goals, objectives, and risk-management preferences; the general nature of the structure involved, its size, and configuration; the location of the structure on the site; and other planned or existing site improvements, such as access roads, parking lots, and underground utilities. Unless the geotechnical engineer who conducted the study specifically indicates otherwise, do not rely on a geotechnical-engineering report that was:

- not prepared for you;
- not prepared for your project;
- not prepared for the specific site explored; or
- completed before important project changes were made.

Typical changes that can erode the reliability of an existing geotechnical-engineering report include those that affect:

- the function of the proposed structure, as when it's changed from a parking garage to an office building, or from a light-industrial plant to a refrigerated warehouse;
- the elevation, configuration, location, orientation, or weight of the proposed structure;
- the composition of the design team; or
- project ownership.

As a general rule, *always* inform your geotechnical engineer of project changes—even minor ones—and request an assessment of their impact. *Geotechnical engineers cannot accept responsibility or liability for problems that occur because their reports do not consider developments of which they were not informed.*

Subsurface Conditions Can Change

A geotechnical-engineering report is based on conditions that existed at the time the geotechnical engineer performed the study. *Do not rely on a geotechnical-engineering report whose adequacy may have been affected by*: the passage of time; man-made events, such as construction on or adjacent to the site; or natural events, such as floods, droughts, earthquakes, or groundwater fluctuations. *Contact the geotechnical engineer before applying this report to determine if it is still reliable.* A minor amount of additional testing or analysis could prevent major problems.

Most Geotechnical Findings Are Professional Opinions

Site exploration identifies subsurface conditions only at those points where subsurface tests are conducted or samples are taken. Geotechnical engineers review field and laboratory data and then apply their professional judgment to render an opinion about subsurface conditions throughout the site. Actual subsurface conditions may differ — sometimes significantly — from those indicated in your report. Retaining the geotechnical engineer who developed your report to provide geotechnical-construction observation is the most effective method of managing the risks associated with unanticipated conditions.

A Report's Recommendations Are Not Final

Do not overrely on the confirmation-dependent recommendations included in your report. *Confirmation-dependent recommendations are not final,* because geotechnical engineers develop them principally from judgment and opinion. Geotechnical engineers can finalize their recommendations *only* by observing actual subsurface conditions revealed during construction. *The geotechnical engineer who developed your report cannot assume responsibility or liability for the report's confirmation-dependent recommendations if that engineer does not perform the geotechnical-construction observation required to confirm the recommendations' applicability.*

A Geotechnical-Engineering Report Is Subject to Misinterpretation

Other design-team members' misinterpretation of geotechnical-engineering reports has resulted in costly

Attachment: Exhibit B - Fire Station #96 Project Manual (2023-R-55 : Fire Station Construction)

problems. Confront that risk by having your geotechnical engineer confer with appropriate members of the design team after submitting the report. Also retain your geotechnical engineer to review pertinent elements of the design team's plans and specifications. Constructors can also misinterpret a geotechnical-engineering report. Confront that risk by having your geotechnical engineer participate in prebid and preconstruction conferences, and by providing geotechnical construction observation.

Do Not Redraw the Engineer's Logs

Geotechnical engineers prepare final boring and testing logs based upon their interpretation of field logs and laboratory data. To prevent errors or omissions, the logs included in a geotechnical-engineering report should *never* be redrawn for inclusion in architectural or other design drawings. Only photographic or electronic reproduction is acceptable, *but recognize that separating logs from the report can elevate risk.*

Give Constructors a Complete Report and Guidance

Some owners and design professionals mistakenly believe they can make constructors liable for unanticipated subsurface conditions by limiting what they provide for bid preparation. To help prevent costly problems, give constructors the complete geotechnical-engineering report, *but* preface it with a clearly written letter of transmittal. In that letter, advise constructors that the report was not prepared for purposes of bid development and that the report's accuracy is limited; encourage them to confer with the geotechnical engineer who prepared the report (a modest fee may be required) and/or to conduct additional study to obtain the specific types of information they need or prefer. A prebid conference can also be valuable. *Be sure constructors have sufficient time* to perform additional study. Only then might you be in a position to give constructors the best information available to you, while requiring them to at least share some of the financial responsibilities stemming from unanticipated conditions.

Read Responsibility Provisions Closely

Some clients, design professionals, and constructors fail to recognize that geotechnical engineering is far less exact than other engineering disciplines. This lack of understanding has created unrealistic expectations that have led to disappointments, claims, and disputes. To help reduce the risk of such outcomes, geotechnical engineers commonly include a variety of explanatory provisions in their reports. Sometimes labeled "limitations," many of these provisions indicate where geotechnical engineers' responsibilities begin and end, to help others recognize their own responsibilities and risks. *Read these provisions closely.* Ask questions. Your geotechnical engineer should respond fully and frankly.

Environmental Concerns Are Not Covered

The equipment, techniques, and personnel used to perform an *environmental* study differ significantly from those used to perform a *geotechnical* study. For that reason, a geotechnical-engineering report does not usually relate any environmental findings, conclusions, or recommendations; e.g., about the likelihood of encountering underground storage tanks or regulated contaminants. *Unanticipated environmental problems have led to numerous project failures.* If you have not yet obtained your own environmental information, ask your geotechnical consultant for risk-management guidance. *Do not rely on an environmental report prepared for someone else.*

Obtain Professional Assistance To Deal with Mold

Diverse strategies can be applied during building design, construction, operation, and maintenance to prevent significant amounts of mold from growing on indoor surfaces. To be effective, all such strategies should be devised for the *express purpose* of mold prevention, integrated into a comprehensive plan, and executed with diligent oversight by a professional mold-prevention consultant. Because just a small amount of water or moisture can lead to the development of severe mold infestations, many mold- prevention strategies focus on keeping building surfaces dry. While groundwater, water infiltration, and similar issues may have been addressed as part of the geotechnical- engineering study whose findings are conveyed in this report, the geotechnical engineer in charge of this project is not a mold prevention consultant; *none of the services performed in connection with the geotechnical engineer's study were designed or conducted for the purpose of mold prevention. Proper implementation of the recommendations conveyed in this report will not of itself be sufficient to prevent mold from growing in or on the structure involved.*

Rely, on Your GBC-Member Geotechnical Engineer for Additional Assistance

Membership in the Geotechnical Business Council of the Geoprofessional Business Association exposes geotechnical engineers to a wide array of risk-confrontation techniques that can be of genuine benefit for everyone involved with a construction project. Confer with you GBC-Member geotechnical engineer for more information.

GEOTECHNICAL BUSINESS COUNCIL
of the Geoprofessional Business Association

8811 Colesville Road/Suite G106, Silver Spring, MD 20910
Telephone: 301/565-2733 Facsimile: 301/589-2017
e-mail: info@geoprofessional.org www.geoprofessional.org

Copyright 2015 by Geoprofessional Business Association (GBA). Duplication, reproduction, or copying of this document, or its contents, in whole or in part, by any means whatsoever, is strictly prohibited, except with GBA's specific written permission. Excerpting, quoting, or otherwise extracting wording from this document is permitted only with the express written permission of GBA, and only for purposes of scholarly research or book review. Only members of GBA may use this document as a complement to or as an element of a geotechnical-engineering report. Any other firm, individual, or other entity that so uses this document without being a GBA member could be commiting negligent or intentional (fraudulent) misrepresentation.

SECTION 313116
TERMITE CONTROL

PART 1 GENERAL

1.01 SECTION INCLUDES

A. Chemical soil treatment.

1.02 REFERENCE STANDARDS

A. Title 7, United States Code, 136 through 136y - Federal Insecticide, Fungicide and Rodenticide Act; 2006.

1.03 QUALITY ASSURANCE

A. Installer Qualifications: Company specializing in performing this type of work and:
   1. Having minimum of 2 years documented experience.
   2. Approved by manufacturer of treatment materials.
   3. Licensed in Florida.

1.04 REGULATORY REQUIREMENTS

A. Conform to applicable code for requirements for application, and comply with EPA regulations.

B. Provide certificate of compliance from authority having jurisdiction indicating approval of toxicants.

1.05 SEQUENCING

A. Apply toxicant immediately prior to installation of vapor barrier under slabs-on-grade.

1.06 WARRANTY

A. See Section 017800 - Closeout Submittals, for additional warranty requirements.

B. Provide five year installer's warranty against damage to building caused by termites.
   1. Include coverage for repairs to building and to contents damaged due to building damage. Repair damage and, if required, re-treat.

PART 2 PRODUCTS

2.01 MATERIALS

A. Manufacturers:
   1. Syngenta Professional Products; Product DemonMax: or equal www.syngentaprofessionalproducts.com.
   2. Substitutions: See Section 016000 - Product Requirements.

B. Toxicant Chemical: EPA approved; synthetically color dyed to permit visual identification of treated soil.

2.02 MIXES

A. Mix toxicant to manufacturer's instructions.

PART 3 EXECUTION

3.01 EXAMINATION

A. Verify that soil surfaces are sufficiently dry to absorb toxicant, and ready to receive treatment.

B. Verify final grading is complete.

3.02 APPLICATION

A. Comply with requirements of U.S. EPA and applicable State and local codes.

B. Spray apply toxicant in accordance with manufacturer's instructions.

C. Apply toxicant at following locations:
   1. Under Slabs-on-Grade.
   2. At Both Sides of Foundation Surface.

D. Under slabs, apply toxicant immediately prior to installation of vapor barrier.

Attachment: Exhibit B - Fire Station #96 Project Manual (2023-R-55 : Fire Station Construction)

E. At foundation walls, apply toxicant immediately prior to finish grading work outside foundations.

F. Apply extra treatment to structure penetration surfaces such as pipe or ducts, and soil penetrations such as grounding rods or posts.

G. Re-treat disturbed treated soil with same toxicant as original treatment.

H. If inspection or testing identifies the presence of termites, re-treat soil and re-test.

3.03 PROTECTION

A. Do not permit soil grading over treated work.

END OF SECTION

Attachment: Exhibit B - Fire Station #96 Project Manual (2023-R-55 : Fire Station Construction)

REPLACEMENT FIRE STATION #96

CITY OF HOLLY HILL

1020 DAYTONA AVENUE

HOLLY HILL, FLORIDA

BID SET

18-MAY-2023

SCHEDULE OF DRAWINGS

CIVIL

C-1 Civil Cover Sheet
C-2 Boundary and Topographic Survey
C-3 Development Information
C-4 Demolition and SWPPP Plan
C-5 SWPPP Details and Notes
C-6 Site Layout Plan
C-7 Drainage Plan
C-8 Grading Plan
C-9 Cross Sections
C-10 Cross Sections
C-11 Utility Plan
C-12 Utility Details and Notes
C-13 City of Holly Hill Standard Utility Details
C-14 City of Holly Hill Standard Utility Details
C-15 City of Holly Hill Standard Utility Details
C-16 City of Holly Hill Standard Utility Details
C-17 City of Holly Hill Standard Utility Details
C-18 Miscellaneous Details and Notes
C-19 Maintenance of Traffic Details
C-20 Autoturn - Fire Truck Plan
L-1 Landscape Plan
L-2 Landscape Details
L-3 Irrigation Plan
L-4 Irrigation Details

ARCHITECTURAL

CS Cover Sheet / Location Maps
A1.0 Site Plan
LS1.0 Life Safety Plan & Notes
A2.0 Floor Plans / Dimensioned Floor Plans
A2.1 Reflected Ceiling Plan / Roof Plan
A2.2 Metal Roof Details
A2.3 Single Ply Roof Details
A2.4 Lightning Protection Plan & Details
A3.0 Building Elevations
A4.0 Building Sections
A4.1 Building Sections & Details

ARCHITECTURAL

A4.2 Wall Types
A4.3 UL Fire Rated Penetrations
A5.0 Wall Sections & Details
A5.1 Wall Sections & Details
A6.0 Finish Schedule / Door Schedule / Window Types
A6.1 Window / Door Details
A6.2 Window / Door Details
A6.3 Misc. Plan Details
A7.0 Millwork Plans & Interior Elevations
A7.1 Millwork Plans & Interior Elevations
A7.2 Millwork Details
A7.3 Millwork Details

STRUCTURAL

S0.0 General Notes
S0.1 General Notes
S0.2 Typical Details
S0.3 Typical Details
S0.4 Typical Details
S0.5 Wind Pressure Schedule
S0.6 Wall Schedule
S1.0 Foundation Plan
S1.1 Framing Plan
S1.2 Framing Plan
S2.0 Foundation Sections
S3.0 Roof Framing Sections
S3.1 Roof Framing Sections
S3.2 Roof Framing Sections
S3.3 Roof Framing Sections

MECHANICAL

MO.1 Mechanical General Information
MO.2 Mechanical Schedules
M1.1 Mechanical Floor Plan
M.5.1 Mechanical Details
M.5.2 Mechanical Details



LOCATION MAP

NORTH

CONSTRUCTION DATA

OCCUPANCY TYPE: MIXED USE
RESIDENTIAL R-2 (LODGING & ROOMING OCCUPANCY) AND
GROUP S2: STORAGE OF FIRE EQUIP. & VEHICLES

BUILDING SIZE : OVERALL GROSS
ONE STORY, 6504 GROSS SQUARE FEET (TOTAL)
RESIDENTIAL, 3382 G.S.F.
STORAGE, 2738 G.S.F.
STORAGE, 384 G.S.F. MEZZANINE

OCCUPANCY LOAD :
RESIDENTIAL, 3382 S.F. / 200 S.F. = 16.9
STORAGE, 3122 S.F. / 300 S.F. = 10.4
TOTAL OCCUPANCY LOAD = 16.9 + 10.4 = (27.3) 28 PEOPLE
RESIDENTIAL OCCUPANCY LOAD = OWNER CERTIFIED (6) MAX.

TYPE OF CONSTRUCTION :
TYPE III UNPROTECTED/ FULLY SPRINKLERED. (STORAGE)
SEPARATED BY 2 HR. RATED WALL FROM:
TYPE III UNPROTECTED/ FULLY SPRINKLERED. (RESIDENTIAL)

REFERENCE LIFE SAFETY PLAN SHEET LS 1.0 FOR MORE INFORMATION

PLUMBING

P0.1 Plumbing General Information
P0.2 Plumbing Schedules
P1.1 Sanitary Floor Plan
P1.2 Domestic Water and Gas Floor Plan
P2.1 Plumbing Roof Plan
P5.1 Plumbing Details
P6.1 Sanitary and Storm Riser Diagrams
P7.1 Domestic Water and Gas Riser Diagrams

FIRE PROTECTION

FP1.0 Fire Protection Notes and Details
FP1.1 Fire Protection Floor Plan



SITE AERIAL

NORTH

CODE STANDARDS WITH LATEST AMENDMENTS

CONSTRUCTION TO CONFORM AS APPLICABLE TO THE FOLLOWING CODES
PERTINENT SECTIONS OF FLORIDA BUILDING CODE
SEVENTH EDITION (FBC 2020) EXISTING BUILDINGS
NATIONAL ELECTRIC CODE (NEC 2017)

PROJECT ARCHITECTS STATEMENT OF COMPLIANCE

TO THE BEST OF MY KNOWLEDGE, THESE PROJECT DOCUMENTS (DRAWINGS/ SPECIFICATIONS) ARE COMPLETE AND COMPLY WITH FLORIDA BUILDING CODE (APPLICABLE EDITIONS).

IT IS THE INTENT OF THE ARCHITECT THAT THIS PROJECT BE IN COMFORMANCE WITH ALL REQUIREMENTS OF THE BUILDINGS AUTHORITIES HAVING JURISDICTION OVER THIS TYPE OF CONSTRUCTION AND OCCUPANCY.
THE CONTRACTOR AND ALL SUB-CONTRACTORS SHALL DO THEIR WORK IN CONFORMANCE WITH ALL APPLICABLE CODES AND REGULATIONS.

GENERAL NOTES:

- CONTRACTOR TO FIELD VERIFY ALL DIMENSIONS BEFORE COMMENCING WORK NOTIFY ARCHITECT OF ANY DISCREPANCIES BEFORE PROCEEDING WITH WORK.
- DIMENSIONS ARE TO FACE OF STUD FOR ALL NEW WORK AND FACE OF GWB AT ALL EXISTING WALLS (VERIFY).

ELECTRICAL

E1.0 Electrical Site Plan
E2.0 Electrical Power and System Plan
E3.0 Electrical Lighting Plan

HALL & OGLE ARCHITECTS, INC.
208 MAGNOLIA AVENUE
DAYTONA BEACH, FLORIDA 32114
www.hoarchitects.com
PH:(386) 255-6163
FAX:(386)257-5650
AA-C000925

SEAL

REVISIONS

NO.	DATE	DESCRIPTION

Replacement Fire Station # 96
City of Holly Hill, Fl.
1020 Daytona Avenue
Holly Hill , Florida

ARCHITECT OF RECORD
JOHN E. HALL AR0010727
DAVID D. OGLE AR93986

DESIGNED BY	DRAWN BY
JEH	SC/ JH
ISSUE DATE	AE PROJECT NUMBER
18-MAY-2023	2204

SHEET TITLE
COVER SHEET

DRAWING NO.
CS

Attachment: Exhibit C - Fire Station #96 Bid Set (2023-R-55 : Fire Station Construction)

INDEX OF SHEETS	
DWG.NO.	DESCRIPTION
1	COVER
2	BOUNDARY AND TOPOGRAPHIC SURVEY
3	DEVELOPMENT INFORMATION
4	DEMOLITION AND SWPPP PLAN
5	SWPPP DETAILS AND NOTES
6	SITE LAYOUT PLAN
7	DRAINAGE PLAN
8	GRADING PLAN
9	CROSS SECTIONS
10	CROSS SECTIONS
11	UTILITY PLAN
12	UTILITY DETAILS AND NOTES
13	CITY OF HOLLY HILL STANDARD UTILITY DETAILS
14	CITY OF HOLLY HILL STANDARD UTILITY DETAILS
15	CITY OF HOLLY HILL STANDARD UTILITY DETAILS
16	CITY OF HOLLY HILL STANDARD UTILITY DETAILS
17	CITY OF HOLLY HILL STANDARD UTILITY DETAILS
18	MISCELLANEOUS DETAILS AND NOTES
19	MAINTENANCE OF TRAFFIC DETAILS
20	AUTOTURN - FIRE TRUCK PLAN
L1	LANDSCAPE PLAN
L2	IRRIGATION DETAILS
L3	IRRIGATION PLAN
L4	IRRIGATION DETAILS
A3.0	BUILDING ELEVATIONS

LEGAL DESCRIPTION

THE EASTERLY 320 OF LOTS TEN (10 AND ELEVEN (11) EXCEPT THE NORTHERLY 125 FEET THEREOF, BLOCK SEVEN (7) OF W.S. FLEMING SUBDIVISION, HOLLY HILL, AS PER MAP IN DEED BOOK C, PAGE 699, PUBLIC RECORDS OF VOLUSIA COUNTY, FLORIDA.

LAND LYING IN VOLUSIA COUNTY, FLORIDA CONTAINS 83,785 SQUARE FEET OR 1.923 ACRES MORE OR LESS.

PROJECT STATEMENT

PROPOSED TO REPLACE EXISTING 4,639 SF FIRE STATION #96 WITH A NEW 6,500 SF FIRE STATION BUILDING. THE EXISTING 4,639 SF FIRE STATION BUILDING WILL REMAIN AND BE CONVERTED INTO A GOVERNMENTAL BUILDING. THE SITE CONSISTS OF 1.923 ACRES WITH 0.804 ACRES OF IMPERVIOUS SURFACE.

JURISDICTIONAL AGENCY	PERMIT No.
CITY OF HOLLY HILL (SITE PLAN)	SP2023-04
SJRWMD (STORMWATER)	78603-5
FDEP (NPDES NOI)	FLR

THE GENERAL CONTRACTOR SHALL ENSURE THAT ANY SUBCONTRACTOR HAS A COMPLETE SET OF CONSTRUCTION DRAWINGS FOR ITS RESPECTIVE WORK. THE ENGINEER ASSUMES NO RESPONSIBILITY FOR SUBCONTRACTORS ONLY UTILIZING INDIVIDUAL DRAWINGS FOR ITS WORK WHERE ADDITIONAL INFORMATION MAY BE CONTAINED ON OTHER DRAWINGS WITHIN THE SET.

THESE DRAWINGS ARE THE PROPERTY OF NEWKIRK ENGINEERING, INC. ANY USE OR REPRODUCTION IN WHOLE OR PART IS PROHIBITED WITHOUT THE EXPRESSED WRITTEN CONSENT OF NEWKIRK ENGINEERING, INC. COPYRIGHT 2013 ALL RIGHTS RESERVED.

SITE PLAN DRAWINGS FOR

REPLACEMENT FIRE STATION #96

SECTION 35, TOWNSHIP 14 S, RANGE 32 E
TAX PARCEL ID # 4235-05-07-0110
1020 DAYTONA AVENUE
HOLLY HILL, FL 32117

MAY 18, 2023 BIDDING

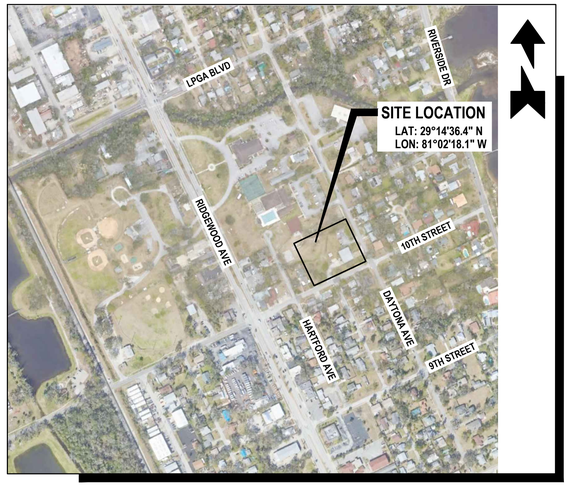

AERIAL MAP

SCALE: 1" = 400'



LOCATION MAP

SCALE: 1" = 300'

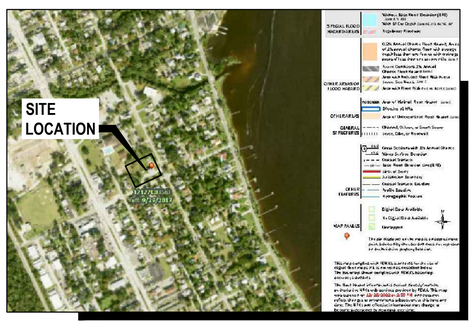

FLOOD ZONE MAP

SCALE: 1" = 800'

FLOOD ZONE "X"
PANEL No. 12127C0356 J
DATED SEPTEMBER 29, 2017

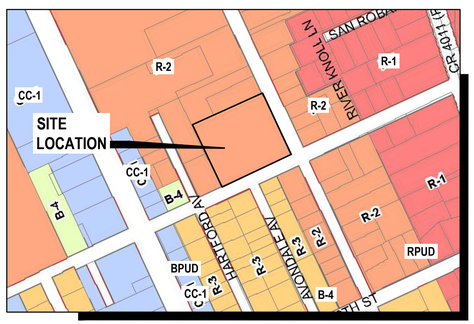

ZONING MAP

SCALE: 1" = 300'

ZONING: (R-2) LOW-MEDIUM DENSITY SINGLE FAMILY RESIDENTIAL

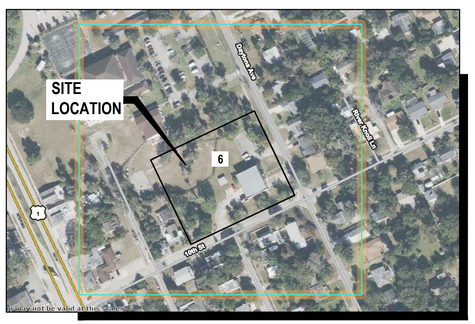

SOILS MAP

SCALE: 1" = 200'

SOIL TYPE: (6) ASTATULA-URBAN LAND COMPLEX, 0 TO 8 PERCENT SLOPES

PROJECT TEAM

PROPERTY OWNER/ APPLICANT: CITY OF HOLLY HILL
1065 RIDGEWOOD AVENUE
HOLLY HILL, FL 32117
PHONE: (386) 248-9424
EMAIL: BWALKER@HOLLYHILLFL.ORG

CIVIL ENGINEER / PROJECT MANAGER / LANDSCAPE ARCHITECT: NEWKIRK ENGINEERING, INC.
1230 NORTH US HIGHWAY 1, SUITE 3
ORMOND BEACH, FL 32174
PHONE: (386) 872-7794
EMAIL: HARRY@NEWKIRK-ENGINEERING.COM

ARCHITECT: HALL & OGLE ARCHITECTS, INC.
208 MAGNOLIA AVENUE
DAYTONA BEACH, FL 32114
PHONE: (386) 255-6163
EMAIL: JHALL@HOARCHITECTS.COM

SURVEYOR: A1A SURVEYING, INC.
555 W GRANADA BOULEVARD, SUITE D7
ORMOND BEACH, FL 32174
PHONE: (386) 672-3633
EMAIL: ALLEN@AIASURVEYING.COM

GEOTECHNICAL: UNIVERSAL ENGINEERING SCIENCES INC
911 BEVILLE ROAD, SUITE 3
SOUTH DAYTONA, FL 32119
PHONE: (386) 756-1105
FAX: (386) 760-4067
EMAIL: BPOHL@UNIVERSALENGINEERING.COM

CONTACT NUMBERS

PLANNING DIVISION - CITY OF HOLLY HILL (386) 248-9442
BUILDING SERVICES - CITY OF HOLLY HILL (386) 248-9442
WATER/ WASTEWATER - CITY OF HOLLY HILL PUBLIC WORKS (386) 248-9463
GAS - TECO PEOPLES GAS (386) 672-2232
ELECTRIC - FLORIDA POWER & LIGHT (386) 322-3420
TELEPHONE/CABLE - AT&T (386) 254-8550

1230 North US1, Suite 3
Ormond Beach, Florida 32174
Phone (386) 872-7794
www.Newkirk-Engineering.com
C.A. # 30026
L.C. # 26000584
© 2013
Civil Engineering, Transportation, CEI & Landscape Architecture
NEWKIRK ENGINEERING INC.

THIS DRAWING IS THE PROPERTY OF NEWKIRK ENGINEERING ANY USE OR REPRODUCTION IN WHOLE OR PART IS PROHIBITED WITHOUT THE EXPRESSED WRITTEN CONSENT OF NEWKIRK ENGINEERING COPYRIGHT 2013 ALL RIGHTS RESERVED

THIS ITEM HAS BEEN DIGITALLY SIGNED AND SEALED BY HARRY NEWKIRK, PE # 62971 ON

HARRY NEWKIRK LICENSE NO. 62971 STATE OF FLORIDA PROFESSIONAL ENGINEER

PRINTED COPIES OF THIS DOCUMENT ARE NOT CONSIDERED SIGNED AND SEALED AND THE SIGNATURE MUST BE VERIFIED ON ANY ELECTRONIC COPIES.

DRAWING NUMBER

1

PROJECT No. 2022-205

Attachment: Exhibit C - Fire Station #96 Bid Set (2023-R-55 : Fire Station Construction)

1020 DAYTONA AVENUE

Holly Hill, Florida

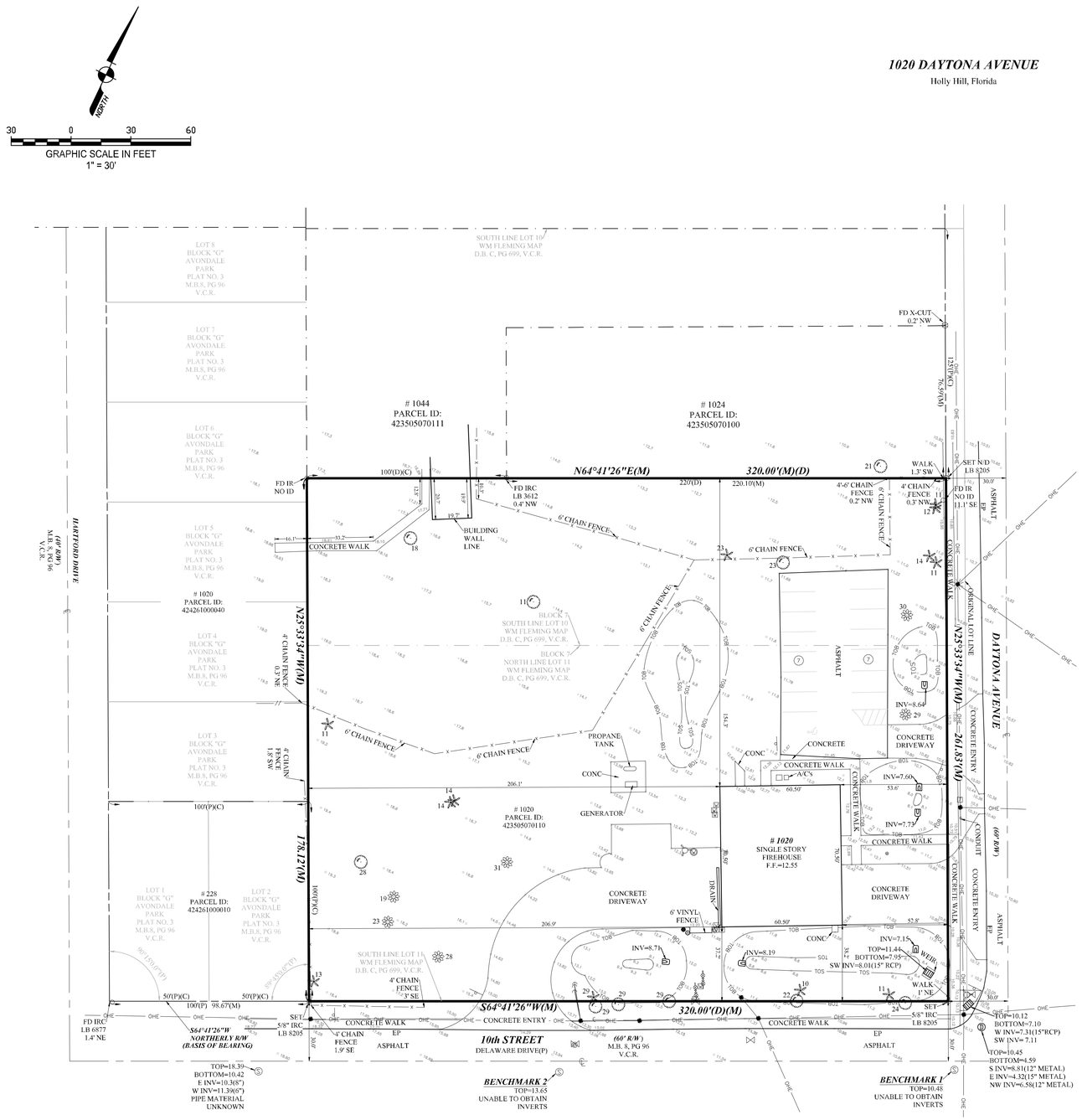

LEGAL DESCRIPTION:

THE EASTERLY 320 OF LOTS TEN (10 AND ELEVEN (11) EXCEPT THE NORTHERLY 125 FEET THEREOF, BLOCK SEVEN (7) OF W.S. FLEMING SUBDIVISION, HOLLY HILL, AS PER MAP IN DEED BOOK C, PAGE 699, PUBLIC RECORDS OF VOLUSIA COUNTY, FLORIDA.

LAND LYING IN VOLUSIA COUNTY, FLORIDA CONTAINS 83,785 SQUARE FEET OR 1.923 ACRES MORE OR LESS.

GENERAL NOTES:

1. BEARING STRUCTURE ASSUMED (S 64° 41" 26" W) ALONG THE NORTHERLY RIGHT-OF-WAY LINE OF 10th STREET. FOR ANGLE MEASUREMENT ONLY.

2. LEGAL DESCRIPTION PER OFFICIAL RECORDS 3558, PAGE 132, PUBLIC RECORDS OF VOLUSIA COUNTY, FLORIDA. NO TITLE WORK PROVIDED TO THIS SURVEYOR.

3. THIS MAP IS INTENDED TO BE DISPLAYED AT A SCALE OF 1" = 30" OR SMALLER. ANY USE OF THIS FILE AT A SCALE LARGER THAN STATED, SHALL BE AT THE USER'S OWN RISK.

4. RECORD DIMENSIONS ARE SHOWN IN PARENTHESIS ( ) , WHEN DIFFERS FROM MEASURED.

5. FLOOD PLANE CERTIFICATION ACCORDING TO THE FEMA (FEDERAL EMERGENCY MANAGEMENT AGENCY) F.I.R.M (FEDERAL INSURANCE RATE MAP), COMMUNITY OF CITY OF HOLLY HILL, FLORIDA NUMBER 125112, PANEL NUMBER 12127 C 0356 J, DATED: SEPTEMBER 29, 2019. THE PROPERTY IS IN FLOOD ZONE "X".

6. DATA SOURCES:

ELEVATIONS REFER TO (NAVD) NORTH AMERICAN VERTICAL DATUM 1988 FEET AND DECIMAL PART THEREOF. BENCHMARK REFERENCE NAVD DATUM OF 1988. BENCHMARK IS A NATIONAL GEODETIC SURVEY DESIGNATION: V 722, ELEVATION = 12.09 FEET.

7. HISTORY REFERENCE TO PREVIOUS SURVEY OR HELPER SURVEYS, LINEAGE OF DATA HORIZONTAL DATA REFERENCES, DATE OF ORIGINAL PLAT.

A.) OFFICIAL RECORDS BOOK 3559, PAGE 132, PUBLIC RECORDS OF VOLUSIA COUNTY, FLORIDA.
B.) AVONDALE PARK, AS RECORDED IN MAP BOOK 14, PAGE 87, OF THE PUBLIC RECORDS OF VOLUSIA COUNTY, FLORIDA.
C.) AVONDALE PARK PLAT NO. 3, AS RECORDED IN MAP BOOK 8, PAGE 96, OF THE PUBLIC RECORDS OF VOLUSIA COUNTY, FLORIDA.
D.) MASON & CARSWELLS, AS RECORDED IN MAP BOOK 12, PAGES 3 AND 4, OF THE PUBLIC RECORDS OF VOLUSIA COUNTY, FLORIDA.
E.) W.S. FLEMING SUBDIVISION, AS RECORDED IN DEED BOOK C, PAGE 699, OF THE PUBLIC RECORDS OF VOLUSIA COUNTY, FLORIDA.

8. THE BOUNDARY LINES SHOWN ARE COMPRISED FROM THE SAID INFORMATION ALONG WITH EXISTING MONUMENTATION FOUND IN THE FIELD. SURVEY DOES NOT DETERMINE OR REFLECT OWNERSHIP. THERE MAY BE OTHER INFORMATION NOT ON RECORD OR PROVIDED, SUCH AS: DEEDS OR SURVEY HELPERS FROM OTHER THAT ARE NOT ON RECORD TO A1A SURVEYING AT THE TIME OF SURVEY. A1A SURVEYING ATTEMPTS TO CONTACT LOCAL SURVEYORS FOR HELPER SURVEYS. SEE LIMITATIONS.

9. UNDERGROUND UTILITIES NOT LOCATED EXCEPT AS SHOWN, PER FIELD VISIBLE LOCATIONS OR MARKINGS.

10. LIMITATIONS:

A.) THE CLIENT AND/OR THEIR LEGAL REPRESENTATIVE(S) IS REQUIRED PER FLORIDA STATUTE RULE 5J-17.052(2)(D)(4) AND THE ALTA REQUIREMENTS THAT ALL RECORDED INSTRUMENTS (EASEMENTS, RIGHT-OF-WAY(S) & ETC.) THAT APPLIES TO THIS SURVEY MUST BE PROVIDED TO THIS SURVEYOR. SOME INSTRUMENTS OF RECORD REFLECTING EASEMENTS, RIGHT-OF-WAY(S) AND OR OWNERSHIP HAVE BEEN FURNISHED TO THE SURVEYOR, PER TITLE COMMITMENT. THERE MAY BE ADDITIONAL RECORDINGS NOT PROVIDED TO THIS SURVEYOR THAT MAY BE FOUND IN THE PUBLIC RECORDS OF THIS COUNTY OR A PREVIOUS SURVEY BY OTHERS NOT ON RECORD THAT WERE NOT PROVIDED AT THE TIME OF THIS SURVEY. THIS SURVEYOR RETAINS THE RIGHT TO REVISE HIS OR HER SURVEY WHEN SAID DOCUMENTATION IS PRESENTED.

B.) IT IS UNDERSTOOD TO BE THE PROFESSIONAL OPINION OF THIS SURVEYOR AND THE FIRM FROM WHICH IS FORMULATED ON HIS / HER BEST KNOWLEDGE, INFORMATION AND BELIEF, AND AS SUCH, DOES NOT CONSTITUTE A GUARANTEE OR WARRANTY, EITHER EXPRESSED OR IMPLIED. FURTHERMORE, THIS SURVEYOR AND FIRM DOES NOT ASSUME RESPONSIBILITY AND SHALL NOT BE LIABLE FOR CLAIMS ARISING FROM ERRONEOUS OR INCORRECT INFORMATION FURNISHED BY THE OWNER, LENDER, OR OWNER'S CONTRACTORS OR OTHERS WHICH IS USED AS A BASIS TO FORMULATE THIS SURVEYORS OPINION.

C.) ADDITIONS OR DELETIONS TO SURVEY MAPS OR REPORTS BY OTHER THAN THE SIGNING PARTY IS PROHIBITED WITHOUT WRITTEN CONSENT OF THE PARTY PER FLORIDA STATUES CHAPTER RULE 5J-17.051(3)(5)(6).

D.) THE ACCEPTANCE OF THIS SURVEY AS CERTIFIED FOR THE EXCLUSIVE USE OF NAMES SHOWN HEREON SHALL CONSTITUTE FULFILLMENT OF MY CONTRACTUAL OBLIGATION. "ORIGINAL" AS DEFINED HEREON REFERS TO THE SIGNED AND SEALED GRAPHIC REPRESENTATION OF THE FIELD SURVEY. CAD FILES ARE NOT THE SURVEY AND THERE MAY BE A SURCHARGE FOR THEM.

E.) TAX PARCEL IDENTIFICATION NUMBERS, ADJACENT OWNERS NAME AND ADDRESS WHEN SHOWN, IS TAKEN FROM SAID COUNTY PROPERTY WEB SITE.

F.) TREE INFORMATION:
TREES AS SHOWN ON THE SURVEY IS FOR THE LOCATION AND DIAMETER TAKEN APPROXIMATELY 4 TO 4-1/2 FEET ABOVE GROUND LEVEL (APPROXIMATELY CHEST HEIGHT). THE TREE IDENTIFICATION SHOWN IS USUALLY A COMMONLY KNOWN NAME. HOWEVER, THE ACCURACY OF THE SPECIES OF SAID IDENTIFICATION SHOULD BE IDENTIFIED AND CONSULTED BY AN ARBORIST OR ANY OTHER PROFESSIONAL LICENSED TO IDENTIFY TREES (LANDSCAPE ARCHITECT, ENVIRONMENTALIST, ETC.). IDENTIFICATION IS OUT OF THE EXPERTISE OF A FLORIDA SURVEYOR OR MAPPER, UNLESS THEY POSSESS SUCH CERTIFICATES.

11. PIPE SIZE, MATERIAL AND INVERTS OF SEWER AND DRAINAGE STRUCTURES WERE OBTAINED WHERE ACCESSIBLE. DUE TO THE NATURE OF OBTAINING THE DATA WHERE THE STRUCTURES ARE IN USE AND THE ACTUAL INVERTS ARE OBSCURED, THE INFORMATION OBTAINED MAY BE THE BEST APPROXIMATION OF THE TRUE MEASUREMENTS. IT IS THE RESPONSIBILITY OF THE END USER TO VERIFY THE DIAMETER AND MATERIAL UTILIZING AS-BUILD DRAWINGS OR OTHER RESOURCES PRIOR TO CONSTRUCTION.

12. IN INSTANCES WHERE THE STRUCTURES ARE FULL OF WATER OR EFFLUENT AND THE INVERTS WERE OBSCURED, THE BOTTOM OF THE STRUCTURE WAS OBTAINED.

13. UNITS OF MEASUREMENT ARE IN U.S. SURVEY FEET AND DECIMAL PARTS THEREOF. WELL IDENTIFIED FEATURES IN THIS SURVEY WERE FIELD MEASURED TO A HORIZONTAL POSITIONAL ACCURACY OF 0.05'. THE ELEVATIONS ON IMPERVIOUS SURFACES WERE FIELD MEASURED TO 0.03' AND ON GROUND SURFACES TO 0.1'.

14. ABBREVIATIONS; ℄ = CENTERLINE; (C) = CALCULATED; CM = CONCRETE MONUMENT; C.N.F. = CORNER NOT FOUND; (D) = DEED; D.B. = DEED BOOK; EL = ELEVATION; EP = EDGE OF PAVEMENT; FD = FOUND; ID = IDENTIFICATION; INV = INVERT; IR/C = IRON ROD AND CAP; LB = LICENSED BUSINESS; LS = LICENSED SURVEYOR; (M) = MEASURED; M.B. = MAP BOOK; N/D = NAIL AND DISK (AS NOTED): No. = NUMBER; O.R.B. = OFFICIAL RECORDS BOOK; (P) = PLAT; P.B. = PLAT BOOK; PG = PAGE; PRM = PERMANENT REFERENCE MONUMENT; PSM = PROFESSIONAL SURVEYOR AND MAPPER; R/W = RIGHT-OF-WAY; V.C.R. = VOLUSIA COUNTY RECORDS

TREE LEGEND

COMMON NAME / SYMBOLS / COUNT		
MAGNOLIA		06
OAK		10
PALM		12
TOTAL TREE COUNT		28

12" DENOTES 12" DIAMETER TRUNK (TYPICAL)

LEGEND

- BACK FLOW PREVENTOR VALVE
- BENCHMARK
- CATCH BASIN
- CLEAN OUT
- DRAINAGE MANHOLE
- EXISTING HARD ELEVATION
- EXISTING HARD ELEVATION
- FIRE HYDRANT
- FLAG POLE
- GUY ANCHOR
- MITERED END SECTION
- NAIL AND DISK
- NUMBER OF REGULAR PARKING
- SANITARY MANHOLE
- SIGN (UNLESS NOTED)
- SPIGOT
- TELEPHONE RISER
- VAULT
- WATER METER
- WATER VALVE
- WOOD UTILITY POLE
- WOOD UTILITY POLE WITH LIGHT
- YARD DRAIN
- TOP OF BANK
- TOE OF SLOPE
- OVERHEAD ELECTRIC

CERTIFIED TO:
--

TYPE OF SURVEY:
Boundary, Tree and Topographic

REVISIONS:

Field Work by: CK Date: 12/05/22 Office Work by: BR Date: 12/09/22
Field Book: 12 Page: 70 Scale: 1" = 30'

SITE ADDRESS:
1020 Daytona Avenue
Holly Hill, Florida

PROJECT:
22-147

A1A SURVEYING, INC.
Professional Surveyor
Residential Commercial Construction
Phone: 386.238.9231
555 W Granada Blvd., Suite D7, Ormond Beach, Florida 32174 LB 8205

THE FOREGOING BOUNDARY, TREE AND TOPOGRAPHIC IS CERTIFIED TO MEET THE STANDARDS OF PRACTICE SET FORTH BY THE FLORIDA BOARD OF PROFESSIONAL SURVEYOR & MAPPERS, PER CHAPTER 5J-17, SECTION 472.027, FLORIDA STATUTES.

NOT VALID WITHOUT THE SIGNATURE AND THE ORIGINAL RAISED SEAL OF A FLORIDA LICENSED SURVEYOR AND MAPPER.

12-09-2022
PSM #6378
David McMillen

Attachment: Exhibit C - Fire Station #96 Bid Set (2023-R-55 : Fire Station Construction)

GENERAL CONSTRUCTION NOTES

1. GOVERNING SPECIFICATIONS: CITY OF HOLLY HILL LAND DEVELOPMENT CODE, CITY OF HOLLY HILL STANDARD CONSTRUCTION DETAILS AND SPECIFICATIONS, CURRENT EDITION.
2. ALL CONSTRUCTION IN THE FDOT ROW SHALL CONFIRM TO THE LATEST EDITIONS OF THE FDOT DESIGN STANDARDS [INDEXES], THE FDOT STANDARD SPECIFICATIONS FOR ROAD AND BRIDGE CONSTRUCTION AND THE FDOT UTILITY ACCOMMODATION MANUAL.
3. ALL UTILITY MATERIAL, CONSTRUCTION AND TESTING COVERED BY THESE DRAWINGS SHALL COMPLY WITH THE CITY OF HOLLY HILL STANDARD CONSTRUCTION DETAILS AND SPECIFICATIONS, LATEST EDITION. ALL UTILITY WORK AND CONNECTIONS SHALL BE COORDINATED WITH THE CITY OF HOLLY HILL INSPECTOR.
4. THE CONTRACTOR SHALL PAY FOR AND OBTAIN A BUILDING PERMIT. THE ENGINEER WILL SCHEDULE THE PRECONSTRUCTION CONFERENCE BEFORE THE CONTRACTOR'S START OF WORK. THE CONTRACTOR SHALL CONTACT THE BUILDING DEPARTMENT AT (386) 248-9442 FOR INFORMATION ON ISSUANCE OF CITY PERMITS AND / OR OTHER REQUIREMENTS.
5. IT IS THE CONTRACTOR'S RESPONSIBILITY TO NOTIFY THE ENGINEER OF ANY DEFICIENCIES OR DISCREPANCIES AMONG THE DIVISIONS OF THE DRAWING AND SPECIFICATIONS PRIOR TO THE BID DATE. NEITHER THE OWNER OR ENGINEER WILL BE RESPONSIBLE FOR ANY DEFICIENCIES OR DISCREPANCIES RAISED AFTER THE BID OPENING. ACCORDINGLY, IN LIGHT OF THESE OBLIGATIONS, THE ENGINEER IS OBLIGATED TO INTERPRET THE DRAWINGS AND SPECIFICATIONS IN A MANNER THAT WILL PROVIDE THE OWNER WITH A COMPLETE, FUNCTIONING FACILITY FOR THE BID PRICE.
6. THESE DRAWINGS AND THE PROJECT MANUAL ARE COMPLEMENTARY, AND ANY REQUIREMENT OF ONE SHALL BE A REQUIREMENT OF THE OTHER. IT IS THE CONTRACTOR'S RESPONSIBILITY TO CAREFULLY EXAMINE THE DRAWINGS AND SPECIFICATIONS AND TO COMPARE THE REQUIREMENTS OF EACH DIVISION AND ENSURE THAT EACH TRADE OR SUBCONTRACTOR IS MAKING THE ALLOWANCES NECESSARY TO PROVIDE THE OWNER A COMPLETE FACILITY, OPERATIONAL IN ALL RESPECTS, UNLESS OTHERWISE SPECIFICALLY STATED IN THE DRAWINGS.
7. THE ENGINEER ASSUMES NO RESPONSIBILITY FOR INSTRUCTING THE CONTRACTOR IN THE METHODS OF CONSTRUCTION. IT IS THE CONTRACTOR'S RESPONSIBILITY TO DETERMINE THE METHOD TO CONSTRUCT THE IMPROVEMENTS AS SHOWN ON THE PLANS.
8. ONLY ONE TEMPORARY CONSTRUCTION SIGN IS PERMITTED, NOT TO EXCEED 32 SQUARE FEET IN SIGN AREA, MAXIMUM HEIGHT OF 8 FEET AND NO CLOSER THAN 10 FT FROM PUBLIC RIGHT-OF-WAY. THE CONTRACTOR SHALL APPLY FOR A TEMPORARY SIGN PERMIT AT THE CITY OF HOLLY HILL BUILDING DEPARTMENT. THE SIGN MUST BE REMOVED UPON RECEIPT OF THE CERTIFICATE OF OCCUPANCY.
9. LITTER CONTROL MEASURES TO PREVENT WIND-DRIVEN DEBRIS SHALL BE IMPLEMENTED THROUGHOUT THE DURATION OF CONSTRUCTION. ALL DEBRIS SHALL BE REMOVED AND THE PROJECT SITE CLEANED WITHIN 30 DAYS OF COMPLETION OF CONSTRUCTION.
10. AT NO TIME SHALL EXCAVATIONS BE LEFT UNCOVERED AFTER WORKING HOURS. CONTRACTOR SHALL SECURE THE WORK AREA AT THE END OF EACH DAY'S WORK.
11. AT ALL TIMES, THE CONTRACTOR SHALL TAKE PRECAUTIONS TO PROTECT UNDERGROUND UTILITIES, STRUCTURES AND OTHER ASSOCIATED FACILITIES FROM DAMAGE DURING CONSTRUCTION. IT IS THE CONTRACTOR'S RESPONSIBILITY TO DETERMINE THE MEASURES OF PROTECTION. ANY DAMAGED FACILITIES SHALL BE REPAIRED OR REPLACED AS DIRECTED BY THE CITY OR ENGINEER AT THE CONTRACTORS EXPENSE.
12. THERE SHALL BE NO DEVIATIONS FROM THESE PLANS UNLESS APPROVED IN WRITING BY THE ENGINEER AND THE OWNER.
13. THE CONTRACTOR SHALL CONTACT ALL CONCERNED UTILITIES AT LEAST FORTY-EIGHT (48) HOURS IN ADVANCE OF CONSTRUCTION OPERATIONS.
14. CONTRACTOR SHALL COORDINATE AND COMPLY WITH ALL UTILITY COMPANIES INVOLVED IN PROJECT AND PAY ALL REQUIRED FEES AND COST.
15. THE CONTRACTOR SHALL BE RESPONSIBLE FOR PROVIDING CERTIFIED MATERIAL TEST RESULTS TO THE ENGINEER OF THE RECORD PRIOR TO THE RELEASE OF FINAL CERTIFICATION BY THE ENGINEER, TEST RESULTS MUST INCLUDE, BUT MAY NOT BE LIMITED TO, DENSITIES FOR SUBGRADE AND BASE DENSITIES AT UTILITY CROSSINGS, MANHOLES, INLETS, STRUCTURES. TEST SHALL INCLUDE ASPHALT GRADATION REPORTS, CONCRETE CYLINDERS, ETC.
16. WHERE NEW ASPHALT MEETS EXISTING ASPHALT, THE EXISTING ASPHALT SHALL BE SAW CUT TO PROVIDE A STRAIGHT EVEN LINE.
17. PRIOR TO REMOVING CURB OR GUTTER, THE ADJACENT ASPHALT SHALL BE SAW CUT TO PROVIDE A STRAIGHT EVEN LINE.
18. ALL PROPOSED ELEVATIONS REFER TO FINISHED GRADES.
19. CONCRETE WALKS SHALL BE 4 INCHES THICK HAVING A 3,000 PSI STRENGTH, POURED OVER PROPERLY PREPARED SUBGRADE. ALL CONCRETE SIDEWALKS SHALL BE 8 INCHES THICK ACROSS DRIVEWAYS. 1/2 INCH EXPANSION JOINTS SHALL BE PLACED AT A MAXIMUM OF 50'. CRACK CONTROL JOINTS SHALL BE 5' ON CENTERS.
20. CORE TESTS SHALL BE TAKEN TO VERIFY THICKNESS AND SUBSURFACE COMPACTION. PROVIDE FOR THREE SAMPLES, RANDOMLY LOCATED. TEST FOR EXTRACTION, GRADATION, LABORATORY DENSITY, AND MARSHALL'S STABILITY. PROVIDE A CERTIFICATE FROM THE TESTING AGENCY THAT MATERIALS AND INSTALLATION COMPLY WITH SPECIFICATIONS, SIGNED BY THE ASPHALTIC CONCRETE PRODUCER AND CONTRACTOR. ALL COSTS OF TESTS SHALL BE PAID BY THE CONTRACTOR. IF TESTS SHOW THE INSTALLATION DOES NOT MEET SPECIFICATIONS, THE PAVING SHALL BE REMOVED, REPLACED, AND RETESTED.
21. IF ANY MUCK-LIKE MATERIAL IS DISCOVERED, IT WILL BE REQUIRED TO BE REMOVED, BACKFILLED WITH APPROPRIATE FILL, COMPACTED, AND TESTED USING AASHTO T-180 MODIFIED PROCTOR METHOD.
22. FILL MATERIAL IS TO BE PLACED IN ONE FOOT LIFTS AND COMPACTED TO THE APPROPRIATE DENSITY (98% FOR PAVED AREAS AND 95% FOR BUILDING PADS AND ALL OTHER AREAS AS PER AASHTO T-180).
23. NO BURYING OF ANY ORGANIC MATERIALS ALLOWED.

SITE AND GENERAL INFORMATION

1. THE PROPERTY AREA BOUNDARY CONSISTS OF 83,785 SF OR 1.923 ACRES. FOR BOUNDARY AND TOPOGRAPHIC SURVEY REFER TO THE SURVEY PERFORMED BY A1A SURVEYING. (SEE SHEET No. SU-1 OF THESE PLANS).
2. THE ZONING IS R-2 (LOW-MEDIUM DENSITY SINGLE FAMILY RESIDENTIAL) THE FUTURE LAND USE IS COMMERCIAL, CITY OF HOLLY HILL. THE PARCEL NUMBER IS 4235-05-07-0110.
3. THE EXISTING SITE CONDITION IS DEVELOPED WITH AN EXISTING FIRE STATION. THE FLUCFCS LAND USE IS (175) GOVERNMENTAL.
4. PER THE USDA NATURAL RESOURCES CONSERVATION SERVICE FOR VOLUSIA COUNTY, THE SCS SOILS MAP INDICATES THE SITE CONSISTS OF (6) ASTATULA-URBAN LAND COMPLEX, 0 TO 8 PERCENT SLOPES.
5. THE SITE IS LOCATED WITHIN ZONE "X" PER FEMA MAP PANEL No. 12127C0356 J, DATED SEPTEMBER 29, 2017.
6. ELECTRICAL UTILITY SERVICE WILL BE PROVIDED BY FLORIDA POWER AND LIGHT. NATURAL GAS WILL BE PROVIDED BY TECO PEOPLES GAS. TELEPHONE, CABLE AND INTERNET SERVICE WILL BE PROVIDED BY AT&T. CABLE TV AND INTERNET CAN ALSO BE PROVIDED BY SPECTRUM.
7. SOLID WASTE WILL BE COLLECTED AND DISPOSED OF BY WASTE MANAGEMENT, INC.
8. THE SITE IS NOT LOCATED WITHIN THE LIMITS OF A WELLHEAD PROTECTION ZONE AND THERE IS NO ORDINARY HIGH WATER (OHW) LINE WITHIN THE SITE.
9. POTABLE WATER SERVICE PROVIDED BY PROPOSED 1.5" INCH WATER METER CONNECTED TO CITY OF HOLLY HILL WATER MAIN.
10. WASTEWATER WILL BE PROVIDED BY A 6" SANITARY SERVICE.
11. IRRIGATION SERVICE WILL BE PROVIDED BY NEW IRRIGATION METER SERVICE.
12. ALL ON-SITE WATER AND SEWER FACILITIES ARE OWNED AND MAINTAINED BY THE PROPERTY OWNER.

LEGEND

NOTE: NOT ALL SYMBOLS SHOWN HERE MAY BE APPLICABLE TO THESE DRAWINGS, ALSO THERE MAY BE ADDITIONAL SYMBOLS WITHIN PLANS NOT SHOWN HERE, SEE INDIVIDUAL DRAWING LEGEND WHERE APPLICABLE.

#3	BENCHMARK ID		4" BY 4" CONCRETE MONUMENT
B24	BORING ID		EXISTING EASEMENT
TV	EXISTING CABLE TV PEDESTAL	FOC	EXISTING UNDERGROUND FIBER OPTIC CABLE
	EXISTING CAP OR PLUG	#FM	EXISTING FORCE MAIN (# INDICATES SIZE)
	EXISTING CLEAN OUT	GAS	EXISTING GAS MAIN
	EXISTING CONDUIT RISER/ MARKER	OHE	EXISTING OVERHEAD ELECTRIC CABLES
E	EXISTING ELECTRIC METER	OHT	EXISTING OVERHEAD TRAFFIC SIGNAL CABLE
x 11.7	EXISTING ELEVATION (SOFT)	#RAW	EXISTING RAW WATER MAIN (# INDICATES SIZE)
5.0±	PROPOSED ELEVATION (SOFT)	#REC	EXISTING RECLAIM WATER MAIN (# INDICATES SIZE)
x 11.75	EXISTING ELEVATION (HARD)	#SAN	PROPOSED SANITARY SEWER (# INDICATES SIZE)
5.00	PROPOSED ELEVATION (HARD)	#WM	PROPOSED WATER MAIN (# INDICATES SIZE)
	EXISTING FIRE HYDRANT	12	EXISTING CONTOUR
	PROPOSED FIRE HYDRANT		PROPOSED CONTOUR (SOFT)
	EXISTING FLOW DIRECTION		PROPOSED CONTOUR (HARD)
	PROPOSED FLOW DIRECTION	UTEL	EXISTING UNDERGROUND TELEPHONE CABLE
	EXISTING GAS METER	UTV	EXISTING UNDERGROUND TELEVISION CABLE
	EXISTING GAS VALVE	UGE	EXISTING UNDERGROUND ELECTRICAL POWER CABLE
	EXISTING GUY WIRE & ANCHOR PIN		JURISDICTIONAL WETLAND LINE
	EXISTING MAIL BOX	#SAN	EXISTING SANITARY SEWER (# INDICATES SIZE)
	EXISTING MANHOLE (UNKNOWN)	#WM	EXISTING WATER MAIN (# INDICATES SIZE)
	PROPOSED MANHOLE		EXISTING PIPE OR CONDUIT (TYPE SPECIFIED)
	EXISTING SANITARY SEWER CLEANOUT		EXISTING SWALE OR CENTER OF DITCH
	EXISTING SANITARY SEWER MANHOLE		PROPOSED SWALE OR CENTER OF DITCH
	EXISTING ROAD SIGNS AND POSTS		EXISTING TOP OF DITCH BANK
	PROPOSED SIGN AND POST		EXISTING BOTTOM OF DITCH BANK
	EXISTING TEE		EXISTING WOOD FENCE
	EXISTING UTILITY POLE		EXISTING WIRE OR CHAIN LINK FENCE
	EXISTING VALVE IRRIGATION		PROPOSED WIRE OR CHAIN LINK FENCE
	EXISTING VALVE WATER		PROPOSED SILT/SEDIMENT FENCE
	PROPOSED WATER VALVE		PROPOSED COIR ROLL OR WATTLE
	EXISTING WATER METER		PROPOSED FLOATING TURBIDITY BARRIER
	EXISTING STORM SEWER WITH INLET	TP TP	PROPOSED TREE PROTECTION
	PROPOSED STORM SEWER WITH INLET		
	1/2" IRON ROD (NO I.D.)		

SITE DEVELOPMENT USAGE

1. SETBACK:

	BUILDING REQUIRED / PROVIDED	LANDSCAPE REQUIRED / PROVIDED
FRONT (DAYTONA AVE)	30 FT / 52.8 FT	10 FT / 10 FT
REAR (WEST)	8 FT / 165.4 FT	5 FT / 5 FT
SIDE (NORTH)	8 FT / 15.3 FT	5 FT / 5 FT
CORNER (10TH STREET)	30 FT / 37.2 FT	10 FT / 10 FT
MAXIMUM BUILDING HEIGHT 30 FT		
MAXIMUM LOT COVERAGE (35%)		

2. EXISTING SITE COVERAGE:

	SQ. FT	ACRE	%
BUILDING	4,639	0.106	5.5
PAVEMENT	12,330	0.283	14.7
CONCRETE SIDEWALKS / PATIOS	1,460	0.034	1.8
OPEN SPACE	65,356	1.500	78.0
TOTAL SITE	83,785	1.923	100.00
TOTAL IMPERVIOUS	18,429	0.423	22.0

3. PROPOSED SITE COVERAGE:

	SQ. FT	ACRE	%
PRPOPOSED BUILDING	6,500	0.149	7.8
EXISTING BUILDING	4,639	0.107	5.5
PAVEMENT	20,920	0.480	25.0
CONCRETE SIDEWALKS / PATIOS	2,943	0.068	3.5
OPEN SPACE	48,783	1.119	58.2
TOTAL SITE	83,785	1.923	100.00
TOTAL IMPERVIOUS	35,002	0.804	41.8
TOTAL BUILDING COVERAGE	11,139	0.256	13.3

4. PARKING REQUIREMENTS

FIRE STATION - 1.5 SPACES PER EMPLOYEE
= 8 EMPLOYEES x 1.5 = 12 SPACES
PUBLIC BUILDING - 1.5 SPACES PER EMPLOYEE
= 4 EMPLOYEES x 1.5 = 6 SPACES
TOTAL PARKING REQUIRED = 18 SPACES

5. PARKING PROVIDED

		%
HANDICAP	2	9.5
STANDARD	19	90.5
TOTAL PARKING PROVIDED	21	100.0

STATE OF FLORIDA DEPARTMENT OF TRANSPORTATION ROADWAY AND TRAFFIC DESIGN STANDARDS - 2022 / 2023 AND QUALIFIED PRODUCTS LIST

INDEX NO.	DESCRIPTION
102	TEMPORARY EROSION AND SEDIMENT CONTROL
102-600	GENERAL INFORMATION FOR TRAFFIC CONTROL THROUGH WORK ZONES
102-602	TWO-LANE AND MULTILANE, WORK ON SHOULDER
102-660	SIDEWALK CLOSURE
205	PIPE BACKFILL
350-001	CONCRETE PAVEMENT JOINTS
425-010	STRUCTURE BOTTOMS - TYPES J AND P
425-024	CURB INLET TOP - TYPE 9
425-052	CURB INLET TOP - TYPES C, D, E AND H
430-001	MISCELLANEOUS DRAINAGE DETAILS
430-011	U-TYPE CONCRETE ENDWALLS - 15" TO 30" PIPE
520-001	CURB & CURB AND GUTTER
522-022	PUBLIC SIDEWALK CURB RAMPS
522-001	CONCRETE SIDEWALK
514	OPTIONAL BASE GROUP AND STRUCTURAL NUMBERS
700-101	TYPICAL SECTIONS FOR PLACEMENT OF SINGLE & MULTIPLE-COLUMN SIGNS
711-001	SPECIAL MARKING AREAS

ABBREVIATIONS

AWWA	AMERICAN WATER	GW	GROUND WATER	R	RADIUS
WORKS	ASSOCIATION	H/C	HANDICAP	RCP	REINFORCED CONCRETE
CMP	CORRUGATED METAL	HDPE	HIGH DENSITY		PIPE
PIPE			POLYETHYLENE	RPM	REFLECTIVE PAVEMENT
CPP	CORRUGATED PLASTIC	INV	INVERT		MARKER
	PIPE	K_H	HORIZONTAL	R/W	RIGHT-OF-WAY
CTV	CABLE TELEVISION		PERMEABILITY	SAN	SANITARY
DIP	DUCTILE IRON PIPE	K_V	VERTICAL PERMEABILITY	SH	SEASONAL HIGH
ESMT	EASEMENT	KO	KNOCK OUT	SMH	SANITARY MANHOLE
EXIST	EXISTING	LF	LINEAL FEET	SJRWMD	ST. JOHNS RIVER WATER
FAC	FLORIDA ADMINISTRATIVE CODE	MB	MAP BOOK		MANAGEMENT DISTRICT
		MES	MITERED END SECTION	SS	SANITARY SEWER
FDEP	FLORIDA DEPARTMENT OF ENVIRONMENTAL PROTECTION	MJ	MECHANICAL JOINT	SWPPP	STORMWATER POLLUTION PREVENTION PLAN
		N/A	NOT APPLICABLE		
		NIC	NOT IN CONTRACT	TSB	TEMPORARY SEDIMENT BASIN
FEMA	FEDERAL EMERGENCY MANAGEMENT AGENCY	NGVD	NATIONAL GEODETIC VERTICAL DATUM	TYP	TYPICAL
				UGE	UNDERGROUND ELECTRIC
FH	FIRE HYDRANT	OHE	OVERHEAD ELECTRIC	UGT	UNDERGROUND TELEPHONE
FOC	FIBER OPTIC CABLE	OR	OFFICIAL RECORD		
FF EL	FINISH FLOOR ELEVATION	PG	PAGE	USACOE	UNITED STATES ARMY CORP OF ENGINEERS
FM	FORCE MAIN	PSI	POUNDS PER SQUARE INCH		
FPD	FEET PER DAY			W	WATER (POTABLE)
G	GAS	PVC	POLYVINYL CHLORIDE		
GPC	GULF POWER COMPANY	PVMT	PAVEMENT		

SITE GEOTECHNICAL CONSIDERATIONS

SEE GEOTECHNICAL REPORT UNIVERSAL ENGINEERING SCIENCES, INC. (REPORT #141214, DATED FEBRUARY 15, 2023) FOR ALL SITE PREPARATION AND EARTHWORK REQUIREMENTS.

CITY OF HOLLY HILL PRE-CONSTRUCTION REQUIREMENTS

PLEASE NOTE, A PRE-CONSTRUCTION MEETING WILL BE REQUIRED PRIOR TO CONSTRUCTION. THE FOLLOWING SHALL BE SUBMITTED PRIOR TO THE PRE-CONSTRUCTION MEETING:

A. IF SUBMITTED PLANS REQUIRE REVISION, PLEASE SUBMIT FIVE (5) COMPLETE PLAN SETS IN 24x36.
B. ENGINEER'S OPINION OF PROBABLE COST (MUST BE SUBMITTED IN ADVANCE)
THE EOPC SHOULD BE ACCOMPANIED BY A CHECK FOR INSPECTION FEES. THIS IS SEPARATE FROM THE BUILDING PERMIT FEES AND IS BASED ON THE ENGINEER'S OPINION OF COST MINUS WATER AND SEWER INSTALLATION. INSPECTION FEES CAN BE FOUND IN THE FEE SCHEDULE AND IS 2% FOR THE FIRST $125,000; 1% OVER $125,000 TO $500,000 AND 0.5% OVER $500,000.
C. CONSTRUCTION SCHEDULE (MUST BE SUBMITTED IN ADVANCE).

REVISIONS

DATE	DESCRIPTION
4/11/23	CITY COMMENTS
5/17/23	ARCHITECT COMMENTS
5/18/23	BIDDING

1230 North US1, Suite 3
Ormond Beach, Florida 32174
Phone (386) 672-7784
www.Newkirk-Engineering.com
C.A. # 30209
L.C. # 26000584
© 2013
Civil Engineering
Transportation, CEI &
Landscape Architecture

NEWKIRK ENGINEERING INC.

DEVELOPMENT INFORMATION
REPLACEMENT FIRE STATION # 96
1020 DAYTONA AVENUE
HOLLY HILL, FL 32117

THIS DRAWING IS THE PROPERTY OF NEWKIRK ENGINEERING ANY USE OR REPRODUCTION IN WHOLE OR PART IS PROHIBITED WITHOUT THE EXPRESSED WRITTEN CONSENT OF NEWKIRK ENGINEERING COPYRIGHT 2013 ALL RIGHTS RESERVED

THIS ITEM HAS BEEN DIGITALLY SIGNED AND SEALED BY HARRY NEWKIRK, PE # 62971 ON

HARRY NEWKIRK LICENSE NO. 62971 STATE OF FLORIDA PROFESSIONAL ENGINEER

PRINTED COPIES OF THIS DOCUMENT ARE NOT CONSIDERED SIGNED AND SEALED AND THE SIGNATURE MUST BE VERIFIED ON ANY ELECTRONIC COPIES.

PROJECT No:	2022-205
DATE:	MAY 18, 2023
DESIGN BY:	HHN
DRAWN BY:	NWS
CHECKED BY:	HHN
SCALE:	

DRAWING NUMBER

3

Attachment: Exhibit C - Fire Station #96 Bid Set (2023-R-55 : Fire Station Construction)

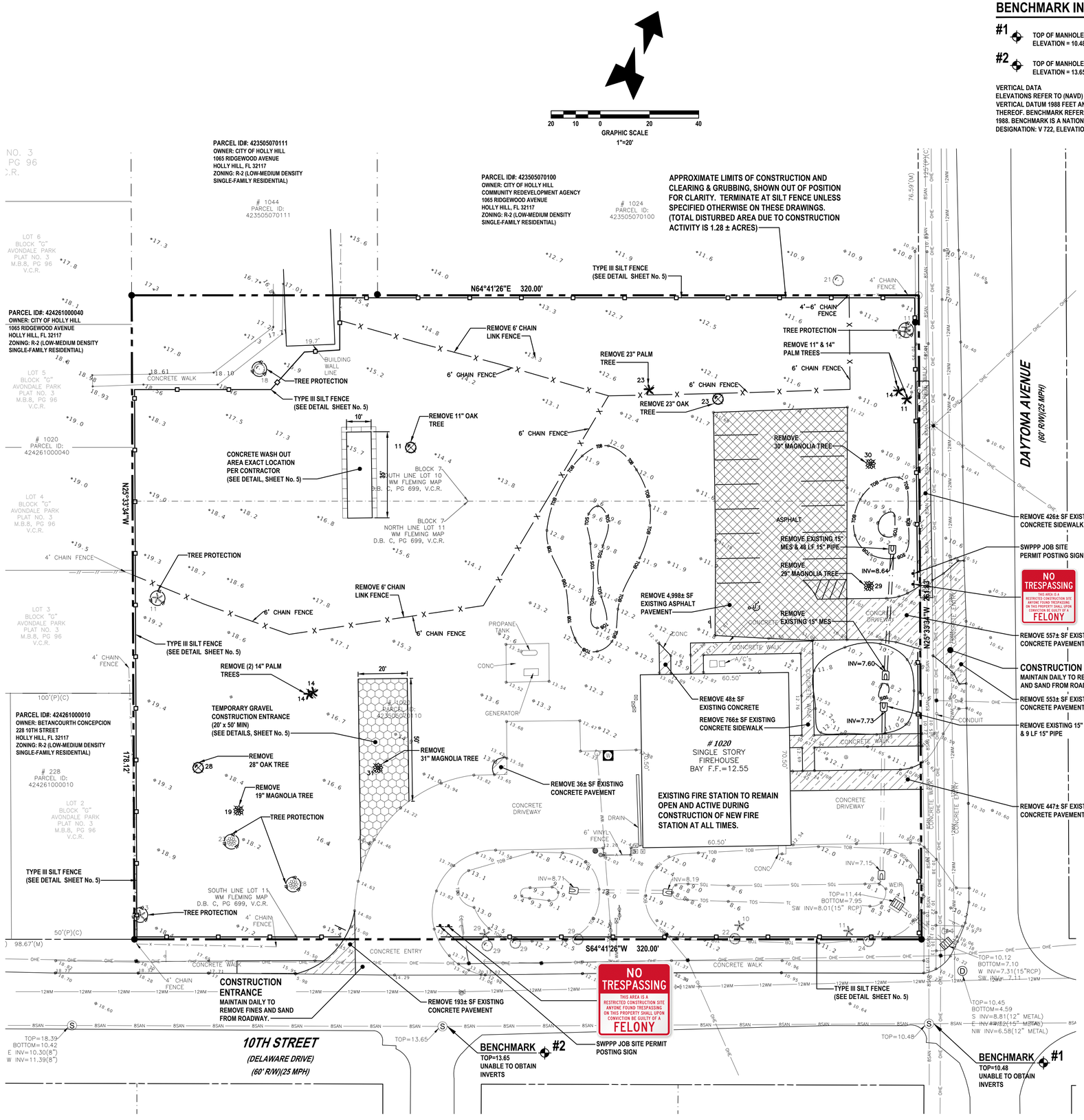

BENCHMARK INFORMATION:

#1 TOP OF MANHOLE ELEVATION = 10.48'

#2 TOP OF MANHOLE ELEVATION = 13.65'

VERTICAL DATA
ELEVATIONS REFER TO (NAVD) NORTH AMERICAN VERTICAL DATUM 1988 FEET AND DECIMAL PART THEREOF. BENCHMARK REFERENCE NAVD DATUM OF 1988. BENCHMARK IS A NATIONAL GEODETIC DESIGNATION: V 722, ELEVATION = 12.09 FEET.

DEMOLITION AND SWPPP NOTES:

1. ALL EROSION CONTROL DEVICES AND VISIBLE BARRICADES SHALL BE INSTALLED AND APPROVED BY THE ENGINEER PRIOR TO THE START OF CLEARING AND GRUBBING.
2. THE CONTRACTOR SHALL SCHEDULE A PRECONSTRUCTION MEETING WITH THE CITY AS SPECIFIED PRIOR TO START OF CONSTRUCTION.
3. THE SITE SHALL BE CLEARED AND GRUBBED OF ALL VEGETATION AND DEBRIS WITHIN THE APPROXIMATE LIMITS OF CLEARING AS INDICATED ON THE DRAWING.
4. THE CONTRACTOR SHALL BE RESPONSIBLE FOR CONTACTING THE CITY OF HOLLY HILL UTILITY DEPARTMENT, FLORIDA SUNSHINE AND EMERGENCY SERVICES FOR RESPECTIVE UTILITY LOCATIONS AND "NOTICE" OF CONSTRUCTION ACTIVITY.
5. ALL REMOVED MATERIAL SHALL BE HAULED OFF-SITE TO AN APPROVED LANDFILL. TREES MAY BE LOGGED OR MULCHED FOR OFF-SITE DISPOSAL AT THE CONTRACTOR'S DISCRETION.
6. ALL EROSION CONTROL DEVICES SHALL BE PLACED PRIOR TO THE START OF WORK AND REMAIN IN PLACE UNTIL ALL WORK IS COMPLETE.
7. CONTRACTOR SHALL BE RESPONSIBLE FOR PERIODIC INSPECTION AND REMOVAL OF DEBRIS AND SILT BEHIND EROSION CONTROL DEVICES.
8. ALL INLETS AND PIPE SHALL BE PROTECTED DURING CONSTRUCTION BY INLET PROTECTION MEASURES TO PREVENT SILTATION IN THE DRAINAGE SYSTEM (SEE DETAILS THIS DRAWING). THE ENTIRE DRAINAGE SYSTEM SHALL BE CLEANED OF ALL DEBRIS PRIOR TO FINAL ACCEPTANCE.
9. ALL OFF-SITE AREAS DISTURBED DURING CONSTRUCTION ACTIVITY SHALL BE IMMEDIATELY RESTORED TO PRIOR CONDITION UPON COMPLETION OF WORK.
10. SOILS ARE TO BE STABILIZED BY WATER OR OTHER MEANS DURING CONSTRUCTION. THIS IS INTENDED TO REDUCE SOIL EROSION, BLOWING SAND AND THE IMPACT TO NEIGHBORING PROPERTIES.
11. THE CONTRACTOR SHALL PROVIDE THE ENGINEER, CITY A MOT PLAN AT PRECONSTRUCTION MEETING. TRAFFIC SHALL BE ALLOWED TO CONTINUE DURING WORK. PROVIDE MEASURES TO DETOUR TRAFFIC AROUND OPEN EXCAVATION WITH ADEQUATE BARRICADES, SIGNAGE AND FLAGPERSON TO DIRECT TRAFFIC. EMERGENCY SERVICES SHALL BE NOTIFIED 48 HOUR IN ADVANCE.
12. EXISTING DRIVEWAYS SHOWN ADJACENT TO OR OUTSIDE LIMITS OF CONSTRUCTION SHALL REMAIN IN-SERVICE. EXISTING UTILITIES AND DRIVEWAYS SHALL NOT BE REMOVED UNLESS OTHERWISE NOTED.
13. IF ANY DEWATERING IS TO OCCUR DURING ANY PHASE OF CONSTRUCTION THEN DEWATERING ACTIVITY SHALL ADHERE TO CHAPTER 40C-22 FAC MORE SPECIFICALLY AS FOLLOWS. PER 40C-22.030(3) A "NOTICED GENERAL SHORT-TERM DEWATERING PERMIT" IS REQUIRED "ONLY IF" DEWATERING EXCEEDS 4 MILLION GALLONS PER DAY, EXCEPT DURING THE FIRST 120 HOURS OF DEWATERING WHEN THE DAILY AND INSTANTANEOUS PUMPAGE RATES SHALL NOT EXCEED 6 MILLION GALLONS PER DAY. AVERAGE DAILY WITHDRAWAL SHALL NOT EXCEED 2 MILLION GALLONS PER DAY FOR THE FIRST 60 DAYS OF THE DEWATERING ACTIVITY AND SHALL NOT EXCEED ONE MILLION GALLONS PER DAY OF A 180 DAY DURATION. EACH SPECIFIC DEWATERING PROJECT SHALL NOT EXCEED 180 DAYS. THE CONTRACTOR SHALL BE RESPONSIBLE TO ENSURE ANY DEWATERING ACTIVITY IS BELOW THE SPECIFIED THRESHOLD. OTHERWISE A PERMIT WILL BE REQUIRED AT THE EXPENSE OF THE CONTRACTOR. THE CONTRACTOR SHALL FAMILIARIZE ITSELF WITH CHAPTER 40C-22 FAC AND BE SOLELY RESPONSIBLE FOR OBTAINING AND SUBMITTING FORM RDS-50 TO SJRWMD A MINIMUM OF 10 DAYS PRIOR TO ANY DEWATERING ACTIVITY. SUBMITTAL OF FORM RDS-50 IS NOT REQUIRED IF DEWATERING IS 300,000 GALLONS PER DAY OR LESS AND WILL NOT EXCEED 30 DAYS IN DURATION.

EROSION CONTROL NOTES:

1. LAND DISTURBING ACTIVITIES SHALL NOT COMMENCE UNTIL APPROVAL TO DO SO HAS BEEN RECEIVED BY GOVERNING AUTHORITIES. THE GENERAL CONTRACTOR SHALL STRICTLY ADHERE TO THE SWPPP DURING CONSTRUCTION OPERATIONS.
2. NO LAND CLEARING OR GRADING SHALL BEGIN UNTIL ALL EROSION CONTROL DEVICES HAVE BEEN INSTALLED.
3. THE CONTRACTOR SHALL POST "NO TRESPASSING" SIGNAGE AT ALL SITE ENTRANCES PRIOR TO CONSTRUCTION.
4. MAINTAIN EROSION CONTROL MEASURES AFTER EACH RAIN AND AT LEAST ONCE A WEEK.
5. THIS PLAN SHALL NOT BE CONSIDERED ALL INCLUSIVE AS THE GENERAL CONTRACTOR SHALL TAKE ALL NECESSARY PRECAUTIONS TO PREVENT SOIL SEDIMENT FROM LEAVING THE SITE.
6. GENERAL CONTRACTOR SHALL COMPLY WITH ALL STATE AND LOCAL ORDINANCES THAT APPLY.
7. ADDITIONAL EROSION AND SEDIMENT CONTROL MEASURES WILL BE INSTALLED IF DEEMED NECESSARY BY ON SITE INSPECTION.
8. NO TURBID WATER SHALL BE DISCHARGED OFF-SITE FROM THE DEWATERING OPERATION. CONTRACTOR SHALL TAKE MEASURES TO CONTROL TURBIDITY.
9. IF INSTALLATION OF STORM DRAINAGE SYSTEM SHOULD BE INTERRUPTED BY WEATHER OF NIGHTFALL, THE PIPE ENDS SHALL BE COVERED WITH FILTER FABRIC.
10. GENERAL CONTRACTOR SHALL BE RESPONSIBLE TO TAKE WHATEVER MEANS NECESSARY TO ESTABLISH PERMANENT SOIL STABILIZATION.
11. PROVIDE DUST CONTROL FOR ALL EARTHWORK OPERATIONS. COVER AREA WITH LIGHT COATING OF WATER OR OTHER APPROVED METHOD.

SWPPP INSPECTIONS AND RECORD KEEPING:

INSPECTIONS ARE REQUIRED AT LEAST EVERY SEVEN (7) CALENDAR DAYS AND WITHIN 24 HOURS FOLLOWING A RAINFALL EVENT OF ONE-HALF (1/2) OF AN INCH OF RAINFALL OR GREATER AND SHALL CONTINUE UNTIL THE SITE COMPLIES WITH FINAL STABILIZATION (NOTICE OF TERMINATION). INSPECTIONS MUST BE CONDUCTED BY A "QUALIFIED" INSPECTOR. "QUALIFIED" IS DEFINED AS A PERSON THAT A). HAS SUCCESSFULLY COMPLETED AND MET ALL REQUIREMENTS NECESSARY TO BE FULLY CERTIFIED THROUGH THE FDEP STORMWATER, EROSION AND SEDIMENTATION CONTROL INSPECTOR TRAINING PROGRAM; B). HAS SUCCESSFULLY COMPLETED AN EQUIVALENT FORMAL TRAINING PROGRAM; OR C). THAT IS QUALIFIED BY OTHER TRAINING OR PRACTICAL EXPERIENCE IN THE FIELD OF STORMWATER POLLUTION PREVENTION AND EROSION AND SEDIMENTATION CONTROL. EACH INSPECTION MUST BE FOLLOWED UP BY A REPORT DOCUMENTING THE INSPECTOR'S FINDINGS AND REQUEST THE REQUIRED MAINTENANCE AND/OR REPAIR FOR THE EROSION AND SEDIMENTATION CONTROL MEASURES. THESE RECORDS ARE USED TO PROVE THAT THE REQUIRED INSPECTION AND MAINTENANCE WERE PERFORMED AND SHALL BE PLACED IN THE SWPPP LEDGER. IN ADDITION TO INSPECTION AND MAINTENANCE REPORTS, RECORDS SHOULD BE KEPT OF CONSTRUCTION ACTIVITIES THAT OCCUR ON THE SITE. THE CONTRACTOR SHALL RETAIN COPIES OF THE SWPPP, ALL REPORTS AND DATA FOR A MINIMUM OF FIVE (5) YEARS AFTER THE PROJECT IS COMPLETE IN PAPER AND CD FORMAT.

LEGEND:

- PROPOSED SILT FENCE (SEE DETAIL, SHEET No. 5)
- ASPHALT PAVEMENT REMOVAL
- CONCRETE REMOVAL
- 11 EXISTING TREE (No. INDICATES SIZE)
- 11 TREES TO BE REMOVED

One Nation... One Number... 811 Know what's below. Call before you dig.

WARNING !!

CONTRACTOR SHALL TAKE ALL PRECAUTIONS DURING CONSTRUCTION TO AVOID CONTACT WITH EXISTING UNDERGROUND UTILITIES, GAS MAINS AND OVERHEAD ELECTRIC IN THE RIGHT-OF-WAY.

REVISIONS

DATE	DESCRIPTION
4/11/23	CITY COMMENTS
5/17/23	ARCHITECT COMMENTS
5/18/23	BIDDING

1230 North US1, Suite 3
Ormond Beach, Florida 32174
Phone (386) 872-7784
www.Newkirk-Engineering.com
C.A. # 30209
L.C. # 26000584
© 2013
Civil Engineering
Transportation, CEI &
Landscape Architecture
NEWKIRK ENGINEERING INC.

DEMOLITION AND SWPPP PLAN
REPLACEMENT FIRE STATION # 96

1020 DAYTONA AVENUE
HOLLY HILL, FL 32117

THIS DRAWING IS THE PROPERTY OF NEWKIRK ENGINEERING ANY USE OR REPRODUCTION IN WHOLE OR PART IS PROHIBITED WITHOUT THE EXPRESSED WRITTEN CONSENT OF NEWKIRK ENGINEERING COPYRIGHT 2013 ALL RIGHTS RESERVED

THIS ITEM HAS BEEN DIGITALLY SIGNED AND SEALED BY HARRY NEWKIRK, PE # 62971 ON

HARRY NEWKIRK LICENSE NO. 62971 STATE OF FLORIDA PROFESSIONAL ENGINEER

PRINTED COPIES OF THIS DOCUMENT ARE NOT CONSIDERED SIGNED AND SEALED AND THE SIGNATURE MUST BE VERIFIED ON ANY ELECTRONIC COPIES.

PROJECT No:	2022-205
DATE:	MAY 18, 2023
DESIGN BY:	HHN
DRAWN BY:	NWS
CHECKED BY:	HHN
SCALE:	1" = 20'

DRAWING NUMBER

4

Attachment: Exhibit C - Fire Station #96 Bid Set (2023-R-55 : Fire Station Construction)

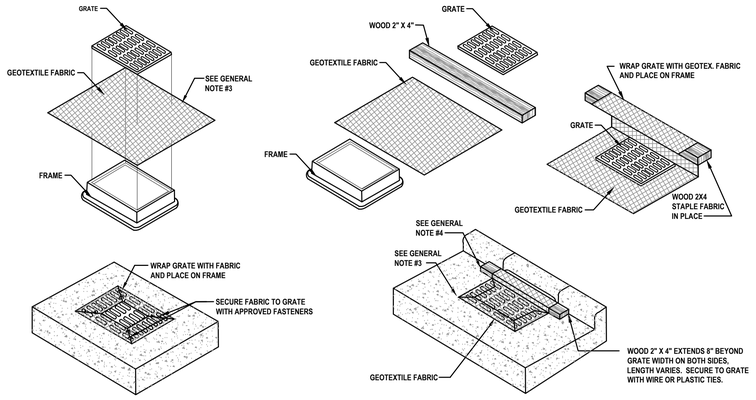

YARD INLET PROTECTION
(CAN BE INSTALLED IN ANY INLET WITHOUT A CURB BOX)

CURB INLET PROTECTION

GENERAL NOTES:

1. GEOTEXTILE TO BE MIRAFI FILTERWEAVE 402 OR GEOTEX 111F. ALTERNATIVES INCLUDE APPROVED EQUAL ASTM D4491 OR 100 TO 150 GALLON PER MINUTE PER SQUARE FOOT.
2. WHEN REMOVING OR MAINTAINING INLET PROTECTION, CARE SHALL BE TAKEN SO THAT THE SEDIMENT TRAPPED ON THE GEOTEXTILE FABRIC DOES NOT FALL INTO THE INLET. ANY MATERIAL FALLING INTO THE INLET SHALL BE REMOVED IMMEDIATELY.
3. FINISHED SIZE, INCLUDING FLAP POCKETS WHERE REQUIRED, SHALL EXTEND A MINIMUM OF 10" AROUND THE PERIMETER TO FACILITATE MAINTENANCE OR REMOVAL.
4. FOR CURB INLET PROTECTION AN ADDITIONAL 18" OF FABRIC IS WRAPPED AROUND THE WOOD AND SECURED WITH STAPLES. THE WOOD SHALL NOT BLOCK THE ENTIRE HEIGHT OF THE CURB BOX OPENING.
5. TRIM EXCESS FABRIC IN THE FLOW LINE TO WITHIN 3" OF THE GRATE.
6. THE CONTRACTOR SHALL DEMONSTRATE A METHOD OF MAINTENANCE, USING A SEWN FLAP, HAND HOLDS, OR OTHER METHOD TO PREVENT ACCUMULATED SEDIMENT FROM ENTERING THE INLET.

GEOTEXTILE FABRIC INLET PROTECTION

NOT TO SCALE

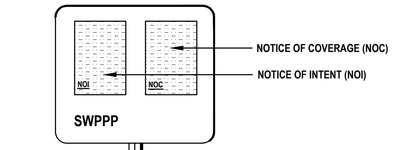

1. NOTICE OF INTENT (NOI) (APPLICATION FOR PERMIT COVERAGE) AND NOTICE OF COVERAGE (NOC) (OR APPROVAL FROM REGULATORY AGENCY) ARE TO BE POSTED.
2. ALL POSTING IS TO BE AT JOB SITE ENTRANCE WHERE IT MAY BE VIEWED BY AUTHORITIES HAVING JURISDICTION AND THE PUBLIC.
3. POSTING IS REQUIRED FROM THE DAY CONSTRUCTION ACTIVITIES START UNTIL THE NOTICE OF TERMINATION (NOT) IS FILED.
4. PROJECT MUST BE POSTED IN TWO LOCATIONS; AT THE JOB SITE ENTRANCE AND INSIDE WALL OF JOB TRAILER.

JOB SITE PERMIT POSTING DETAIL

NOT TO SCALE

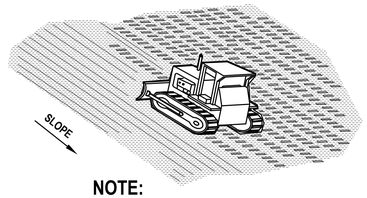

NOTE:

USE DOZER TRACKS TO CREATE GROOVES PERPENDICULAR TO THE SLOPE. GROOVES WILL CATCH SEED, FERTILIZER, MULCH, RAINFALL AND DECREASE SEDIMENT IN RUNOFF.

TRACKING DETAIL

NOT TO SCALE

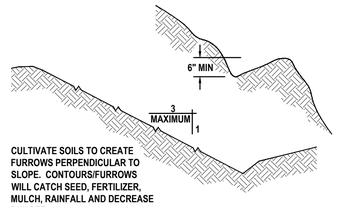

CULTIVATE SOILS TO CREATE FURROWS PERPENDICULAR TO SLOPE. CONTOURS/FURROWS WILL CATCH SEED, FERTILIZER, MULCH, RAINFALL AND DECREASE RUNOFF.

SURFACE ROUGHENING

(NOT TO SCALE)

TEMPORARY SEEDING SPECIFICATION:

GENERAL
SEEDING CAN BE USED FOR TEMPORARY STABILIZATION. DISTURBED AREAS OF THE SITE WHERE CONSTRUCTION ACTIVITY HAS CEASED FOR MORE THAN 7 DAYS SHALL BE TEMPORARILY SEEDED AND WATERED. AREAS WHERE FINAL GRADING HAS BEEN COMPLETED FOR MORE THAN 7 DAYS SHALL BE TEMPORARILY SEEDED. TEMPORARY SEED MIXTURE IS SPECIFIED BELOW.

SEEDING MIXTURES
SEED MIXTURE SHALL BE BERMUDA COMMON 90 LB PURE LIVE SEED PER ACRE, FIBER 2000 LB PER ACRE, STABILIZER 120 LB PER ACRE AND FERTILIZER 300 LB PER ACRE.

ALL SLOPES AND FLAT GRADE
APPLY 6:20:20 COMMERCIAL ORGANIC FERTILIZER AT A RATE OF 300 LB PER ACRE AND SEED IN ACCORDANCE WITH THE FOLLOWING SCHEDULE:

TEMPORARY SEEDING

PLANTING DATES	SEED VARIETY	APPLICATION RATE
APRIL 15 - OCTOBER 15	PENSACOLA BAHIA (SCARIFIED)	90
	BERMUDA COMMON (50% HULLED)	25
0CTOBER 16 - APRIL 14	PENSACOLA BAHIA (SCARIFIED)	100
	BERMUDA COMMON (50% HULLED)	35
	ANNUAL RYE GRASS	10
	RYE GRAIN	30

MULCH SEEDED AREA WITH 2 TONS PER ACRE CLEAN GRAIN STRAW. ANCHOR STRAW WITH HYDRAULIC WOOD FIBER MULCH AT THE RATE OF 1000 LB PER ACRE, OR 150-200 POUNDS OF ORGANIC MULCH TACKIFIER PER ACRE, OR USE NETTING.

HYDRO FIBER MULCH MIXTURE SHALL BE PERFORMED IN A TANK WITH A CONTINUOUS AGITATION AND RECIRCULATION SYSTEM WITH SUFFICIENT OPERATING CAPACITY TO PRODUCE A HOMOGENOUS SLURRY AND DISCHARGE SYSTEM WHICH WILL APPLY THE SLURRY AT A CONTINUOUS AND UNIFORM RATE. MIXTURE SHALL CONTAIN A GREEN FUGITIVE DYE AS AN APPLICATION INDICATOR.

REVISIONS

DATE	DESCRIPTION
4/11/23	CITY COMMENTS
5/17/23	ARCHITECT COMMENTS
5/18/23	BIDDING

1230 North US1, Suite 3
Ormond Beach, Florida 32174
Phone (386) 872-7784
www.Newkirk-Engineering.com
C.A. # 30209
L.C. # 26000584
© 2013
Civil Engineering
Transportation, CEI &
Landscape Architecture
NEWKIRK ENGINEERING INC.

SWPPP DETAILS AND NOTES

REPLACEMENT FIRE STATION # 96

1020 DAYTONA AVENUE
HOLLY HILL, FL 32117

THIS DRAWING IS THE PROPERTY OF NEWKIRK ENGINEERING ANY USE OR REPRODUCTION IN WHOLE OR PART IS PROHIBITED WITHOUT THE EXPRESSED WRITTEN CONSENT OF NEWKIRK ENGINEERING COPYRIGHT 2013 ALL RIGHTS RESERVED

THIS ITEM HAS BEEN DIGITALLY SIGNED AND SEALED BY HARRY NEWKIRK, PE # 62971 ON

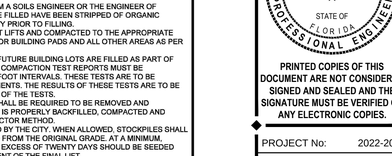

PRINTED COPIES OF THIS DOCUMENT ARE NOT CONSIDERED SIGNED AND SEALED AND THE SIGNATURE MUST BE VERIFIED ON ANY ELECTRONIC COPIES.

PROJECT No:	2022-205
DATE:	MAY 18, 2023
DESIGN BY:	HHN
DRAWN BY:	NWS
CHECKED BY:	HHN
SCALE:	

DRAWING NUMBER

5

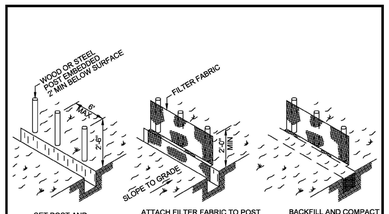

SILT FENCE DETAIL

NOTES:
1. MATERIALS, CONSTRUCTION METHODS AND MAINTENANCE SHALL BE IN ACCORDANCE WITH THE FLORIDA DEPARTMENT OF TRANSPORTATION (FDOT) STANDARD SPECIFICATIONS AND STANDARDS INDEX (LATEST EDITION).
2. CONTRACTOR SHALL PROVIDE SILT FENCES, SYNTHETIC JUTE BALES, WATTLES, AND/OR HAVE BEST MANAGEMENT PRACTICES (BMP'S) AS REQUIRED AT ALL STORMWATER DISCHARGE POINTS FOR EROSION CONTROL AND SEDIMENT CONTROL DURING CONSTRUCTION.
3. CONTRACTOR SHALL ROUGH GRADE STORM- WATER SWALES AND RETENTION AREAS PRIOR TO CONSTRUCTION OF SITE IMPROVEMENTS.
4. CONTRACTOR SHALL MEET ALL PERMIT CONDITIONS AS ESTABLISHED BY THE CITY OF HOLLY HILL AND ALL OTHER APPLICABLE AGENCIES, INCLUDING BUT NOT LIMITED TO COUNTY, FDOT, AND THE SJRWMD.
5. CONTRACTOR WILL BE ALLOWED TO USE A SMALL PIECE OF EQUIPMENT UP TO THE SIZE AND WEIGHT OF A D-3 DOZER TO CLEAR A NARROW PATH TO INSTALL THE SILT FENCE.

HOLLY HILL FLORIDA	CITY OF HOLLY HILL, FLORIDA STANDARD CONSTRUCTION DETAILS	DATE 02/2020
	SILT FENCE TURBIDITY BARRIER	DETAIL NUMBER RD-17

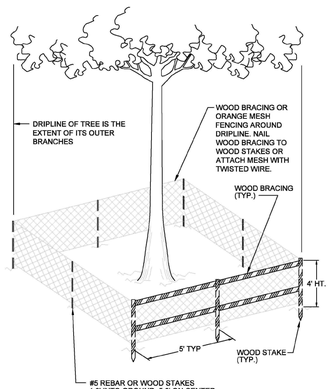

NOTE: BARBED WIRE FENCING IS NOT PERMISSIBLE

HOLLY HILL FLORIDA	CITY OF HOLLY HILL, FLORIDA STANDARD CONSTRUCTION DETAILS	DATE 02/2020
	TREE PROTECTION BARRICADE	DETAIL NUMBER RD-18

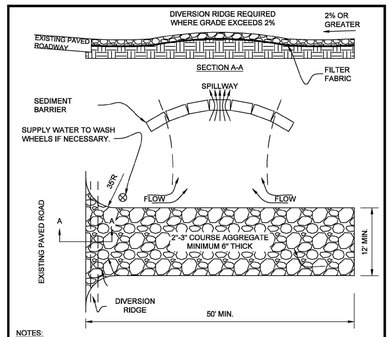

NOTES:
1. THE ENTRANCE SHALL BE MAINTAINED IN A CONDITION THAT WILL PREVENT TRACKING OR FLOWING OF SEDIMENT ONTO PUBLIC RIGHTS-OF-WAY. THIS MAY REQUIRE TOP DRESSING, REPAIR AND/OR CLEANOUT OF ANY MEASURES USED TO TRAP SEDIMENT.
2. WHEN NECESSARY, WHEELS SHALL BE CLEANED PRIOR TO ENTRANCE ONTO PUBLIC RIGHTS-OR-WAY.
3. WHEN WASHING IS REQUIRED, IT SHALL BE DONE ON AN AREA STABILIZED WITH CRUSHED STONE THAT DRAINS INTO AN APPROVED SEDIMENT TRAP OR SEDIMENT BASIN.
4. ALL MATERIALS SPILLED, DROPPED, OR TRACKED ONTO PUBLIC ROADS (INCLUDING T.G.G.E. AGGREGATE AND CONSTRUCTION MUD) SHALL BE REMOVED DAILY, OR MORE FREQUENTLY IF SO DIRECTED.
5. A SOIL TRACKING PREVENTION DEVICE (STPD) IS AN ACCEPTABLE ALTERNATIVE TO THIS DETAIL. REFERENCE FDOT STANDARD PLANS (LATEST EDITION).

HOLLY HILL FLORIDA	CITY OF HOLLY HILL, FLORIDA STANDARD CONSTRUCTION DETAILS	DATE 02/2020
	TEMPORARY GRAVEL CONSTRUCTION ENTRANCE	DETAIL NUMBER RD-20

CONTRACTOR REQUIREMENTS FOR SITE CLEARING, GRADING, AND EROSION CONTROL DESIGN AND CONSTRUCTION NOTES (1 OF 2)

THE FOLLOWING MEASURES REPRESENT MINIMUM STANDARDS TO BE ADHERED TO BY THE CONTRACTOR THROUGHOUT THE CONSTRUCTION OF A PROJECT. THE CITY RESERVES THE RIGHT TO REQUIRE ADDITIONAL MEASURES TO BE EMPLOYED WHEN WARRANTED BY EXTREME CONDITIONS AND/OR THE FAILURE OF THE CONTRACTOR TO EMPLOY THE APPROPRIATE EROSION CONTROL BEST MANAGEMENT PRACTICES. FAILURE TO COMPLY WITH THESE PROVISIONS SHALL RESULT IN THE ISSUANCE OF A "STOP WORK ORDER".

1. NO DISTURBANCE OF PROPOSED CONSERVATION EASEMENTS, NATURAL BUFFERS, OR WATER BODIES IS PERMITTED. THE CONTRACTOR SHALL LOCATE THESE AREAS ON SITE AND BARRICADE THEM TO AVOID ANY UNAUTHORIZED CLEARING. BARRICADES AND OTHER PROTECTIVE FENCING ARE TO BE LOCATED AT THE DRIP LINE OF EXISTING NATIVE TREES OR AT THE EDGE OF THE NATIVE UNDER- STORY HABITAT, WHICHEVER IS NEAREST TO THE CONSTRUCTION ACTIVITY.
2. SPECIMEN AND HISTORIC TREES, CONSERVATION EASEMENTS, NATURAL VEGETATION BUFFERS, AND SIMILAR AREAS MUST BE PROTECTED BY BARRICADES OR FENCING PRIOR TO CLEARING. BARRICADES ARE TO BE SET AT THE DRIP LINE OF THE TREES AND MAINTAINED THROUGHOUT THE DURATION OF THE PROJECT. BARBED WIRE IS NOT PERMITTED AS A PROTECTIVE BARRIER.
3. WHERE A CHANGE OF GRADE OCCURS AT THE DRIP LINE OF A SPECIMEN TREE, SILT FENCES WILL BE REQUIRED DURING CONSTRUCTION AND RETAINING WALLS MUST BE INSTALLED PRIOR TO FINAL ACCEPTANCE BY THE CITY.
4. IT SHALL BE THE RESPONSIBILITY OF THE CONTRACTOR TO HAVE ALL PROTECTIVE VEGETATION BARRICADES AND EROSION CONTROL STRUCTURES AND MEASURES IN PLACE PRIOR TO THE COMMENCEMENT OF ANY EARTHWORK, INCLUDING PRELIMINARY GRUBBING. THESE MEASURES INCLUDE, BUT ARE NOT LIMITED TO, TEMPORARY CONSTRUCTION FENCES, SYNTHETIC JUTE BALES, WATTLES, &/OR HAVE BEST MANAGEMENT PRACTICES (BMP'S) AS REQUIRED, SILT FENCES, AND FLOATING TURBIDITY BARRIERS. FURTHER, IT SHALL BE THE RESPONSIBILITY OF THE CONTRACTOR TO MAINTAIN ALL EROSION CONTROL DEVICES THROUGHOUT THE DURATION OF THE ENTIRE PROJECT. MAINTENANCE SHALL INCLUDE PERIODIC INSPECTION AND REMOVAL OF DEBRIS ABUTTING EROSION CONTROL DEVICES.
5. PRIOR TO THE INSTALLATION OF ANY FILL MATERIALS ON SUBJECT SITE, SILT FENCES SHALL BE INSTALLED (1) ALONG SUBJECT SITE BOUNDARY AND PROPERTY LINES, (2) AT THE EDGE OF CONSERVATION EASEMENTS AND WETLANDS, (3) ADJACENT TO NATURAL LANDSCAPE BUFFERS. (4) AROUND THE PERIMETER OF EXISTING STORM WATER TREATMENT FACILITIES, AND (5) AT ANY ADDITIONAL AREAS THAT THE CITY DEEMS NECESSARY TO BE PROTECTED FROM POTENTIAL EROSION IMPACTS DURING CONSTRUCTION. THESE CONDITIONS SHALL APPLY IN ALL INSTANCES WHERE FILL MATERIAL IS BEING INSTALLED WITHIN 25 FEET OF ANY OF THE AFOREMENTIONED LOCATIONS. WHILE THESE ITEMS REPRESENT THE MINIMUM REQUIREMENTS, THE CITY RESERVES THE RIGHT TO IMPOSE ADDITIONAL PROTECTIVE MEASURES, AS DETERMINED DURING ACTUAL SITE VISITS CONDUCTED AS PART OF THE STANDARD REVIEW OF THE SITE-SPECIFIC ABC CLEARING PERMIT APPLICATION AND THROUGHOUT PROJECT CONSTRUCTION.
6. WHERE FILL MATERIAL IS INTENDED TO BE INSTALLED ADJACENT TO EXISTING VEGETATION WHICH IS INTENDED TO REMAIN NATURAL, THE CONTRACTOR MAY INSTALL SILT FENCING AS A TREE PROTECTION MEASURE, IN LIEU OF INSTALLING EITHER WOOD BRACING OR ORANGE MESH FENCING. THIS PRACTICE IS ENCOURAGED BY THE CITY. IF THE SILT FENCE FAILS TO PROVIDE ADEQUATE PROTECTION FROM IMPACT DUE TO CONSTRUCTION, THEN ADDITIONAL CONSTRUCTION FENCING OR WOOD BRACING SHALL BE REQUIRED.
7. AT A MINIMUM, THE CONTRACTOR SHALL SEED AND MULCH ALL DISTURBED AREAS. SUFFICIENT GRASS COVERAGE IS TO BE ESTABLISHED WITHIN THIRTY DAYS.
8. IT SHALL BE THE RESPONSIBILITY OF THE CONTRACTOR THROUGH SCHEDULING, TO MINIMIZE THE DISTURBANCE OF SITE AREAS THAT HAVE BEEN BROUGHT TO THEIR PROPOSED FINAL GRADE. WITHIN TWENTY DAYS OF BRINGING A SUBJECT AREA TO ITS FINAL GRADE, THE CONTRACTOR SHALL INSTALL SEED AND MULCH OR SOD, AS REQUIRED.

HOLLY HILL FLORIDA	CITY OF HOLLY HILL, FLORIDA STANDARD CONSTRUCTION DETAILS	DATE 02/2020
	CONTRACTOR REQUIREMENTS FOR SITE CLEARING, GRADING, AND EROSION CONTROL DESIGN AND CONSTRUCTION NOTES	DETAIL NUMBER RD-21.1

CONTRACTOR REQUIREMENTS FOR SITE CLEARING, GRADING, AND EROSION CONTROL DESIGN AND CONSTRUCTION NOTES (2 OF 2)

9. FOR INDIVIDUAL CONSTRUCTION PROJECTS INVOLVING MULTIPLE PHASES, UPON COMPLETION OF EACH PHASE OF THE PROJECT, SEEDING AND MULCHING AND OR/ SODDING IS TO BE PERFORMED PRIOR TO COMMENCING THE NEXT PHASE OF CONSTRUCTION.
10. ONCE AN AREA IS SEEDED OR SODDED, IT MUST BE MAINTAINED BY THE CONTRACTOR TO ALLOW THE GRASS TO BECOME ESTABLISHED.
11. ANY BURNING OF CLEARED MATERIALS MUST BE INSPECTED AND PERMITTED ON A DAILY BASIS. CONTACT THE FIRE CHIEF AT 248-8473 PRIOR TO EACH DAY OF DESIRED BURNING.
12. ABSOLUTELY NO BURYING OF CLEARED MATERIALS IS PERMITTED.
13. THE REMOVAL OF ALL VEGETATION AND TOPSOIL ON THE FUTURE ROADWAY, PARKING AND BUILDING LOT AREAS IS REQUIRED TO BE COMPLETED PRIOR TO THE PLACEMENT OF FILL ON THOSE AREAS. THE TOPSOIL MAY BE TEMPORARILY STOCKPILED AND USED AS TOPSOIL OVER OVER PROPOSED GREEN AREAS SUCH AS PLAN' BEDS, SODDED AREAS, AND WHERE TREES ARE TO BE INSTALLED OR RELOCATED.
14. A SIGNED, DATED, AND SEALED LETTER FROM A SOILS ENGINEER OR THE ENGINEER OF RECORD CERTIFYING THAT THE AREAS TO BE FILLED HAVE BEEN STRIPPED OF ORGANIC MATERIALS, MUST BE SUBMITTED TO THE CITY PRIOR TO FILLING.
15. FILL MATERIAL IS TO BE PLACED IN ONE FOOT LIFTS AND COMPACTED TO THE APPROPRIATE DENSITY (98% FOR PAVED AREAS AND 95% FOR BUILDING PADS AND ALL OTHER AREAS AS PER AASHTO T-180).
16. DURING SUBDIVISION DEVELOPMENT WHEN FUTURE BUILDING LOTS ARE FILLED AS PART OF THE OVERALL SUBDIVISION IMPROVEMENTS, COMPACTION TEST REPORTS MUST BE PERFORMED ON THE BUILDING LOTS AT 500 FOOT INTERVALS. THESE TESTS ARE TO BE PERFORMED IN ONE-FOOT VERTICAL INCREMENTS. THE RESULTS OF THESE TESTS ARE TO BE SUBMITTED TO THE CITY UPON COMPLETION OF THE TESTS.
17. IF ANY MUCK MATERIAL IS DISCOVERED, IT SHALL BE REQUIRED TO BE REMOVED AND REPLACED WITH A SUITABLE MATERIAL THAT IS PROPERLY BACKFILLED, COMPACTED AND TESTED USING AASHTO T-180 MODIFIED PROCTOR METHOD.
18. STOCKPILING IS NOT GENERALLY PERMITTED BY THE CITY. WHEN ALLOWED, STOCKPILES SHALL NOT EXCEED SIX FEET IN HEIGHT MEASURED FROM THE ORIGINAL GRADE. AT A MINIMUM, STOCK PILES THAT WILL REMAIN IN PLACE IN EXCESS OF TWENTY DAYS SHOULD BE SEEDED AND MULCHED IMMEDIATELY UPON PLACEMENT OF THE FINAL LIFT.
19. SOILS ARE TO BE STABILIZED BY WATER OR OTHER MEANS DURING CONSTRUCTION. THIS IS INTENDED TO REDUCE SOIL EROSION AND THE IMPACT TO NEIGHBORING COMMUNITIES. ADEQUATE WATERING METHODS SHOULD BE EMPLOYED TO ALLOW DAILY COVERAGE OF THE ENTIRE LIMITS OF ALL AREAS THAT DO NOT HAVE AN ESTABLISHED VEGETATIVE COVER. METHODS TO BE EMPLOYED INCLUDE, BUT ARE NOT LIMITED TO, WATER TRUCKS, PERMANENT IRRIGATION SYSTEMS, TEMPORARY SPRINKLER SYSTEMS OPERATED BY PUMPING UNITS CONNECTED TO WET RETENTION PONDS, WATER CANNONS, TEMPORARY IRRIGATION SYSTEMS MOUNTED ATOP STOCKPILE AREAS, AND OTHER METHODS AS DEEMED NECESSARY BY THE CITY.
20. ALL FILL MATERIALS LOCATED BENEATH STRUCTURES AND PAVEMENT SHALL CONSIST OF CLEAN GRANULAR SAND FREE FROM ORGANICS AND SIMILAR MATERIAL THAT COULD DECOMPOSE.
21. ALL FILL TO BE PLACED IN LANDSCAPED AREAS SHALL HAVE A Ph RANGE BETWEEN 5.5 AND 7.5, BE ORGANIC IN NATURE, FREE OF ROCKS AND DEBRIS, OR MATCH NATIVE EXISTING SOILS.

HOLLY HILL FLORIDA	CITY OF HOLLY HILL, FLORIDA STANDARD CONSTRUCTION DETAILS	DATE 02/2020
	CONTRACTOR REQUIREMENTS FOR SITE CLEARING, GRADING, AND EROSION CONTROL DESIGN AND CONSTRUCTION NOTES	DETAIL NUMBER RD-21.2

Attachment: Exhibit C - Fire Station #96 Bid Set (2023-R-55 : Fire Station Construction)

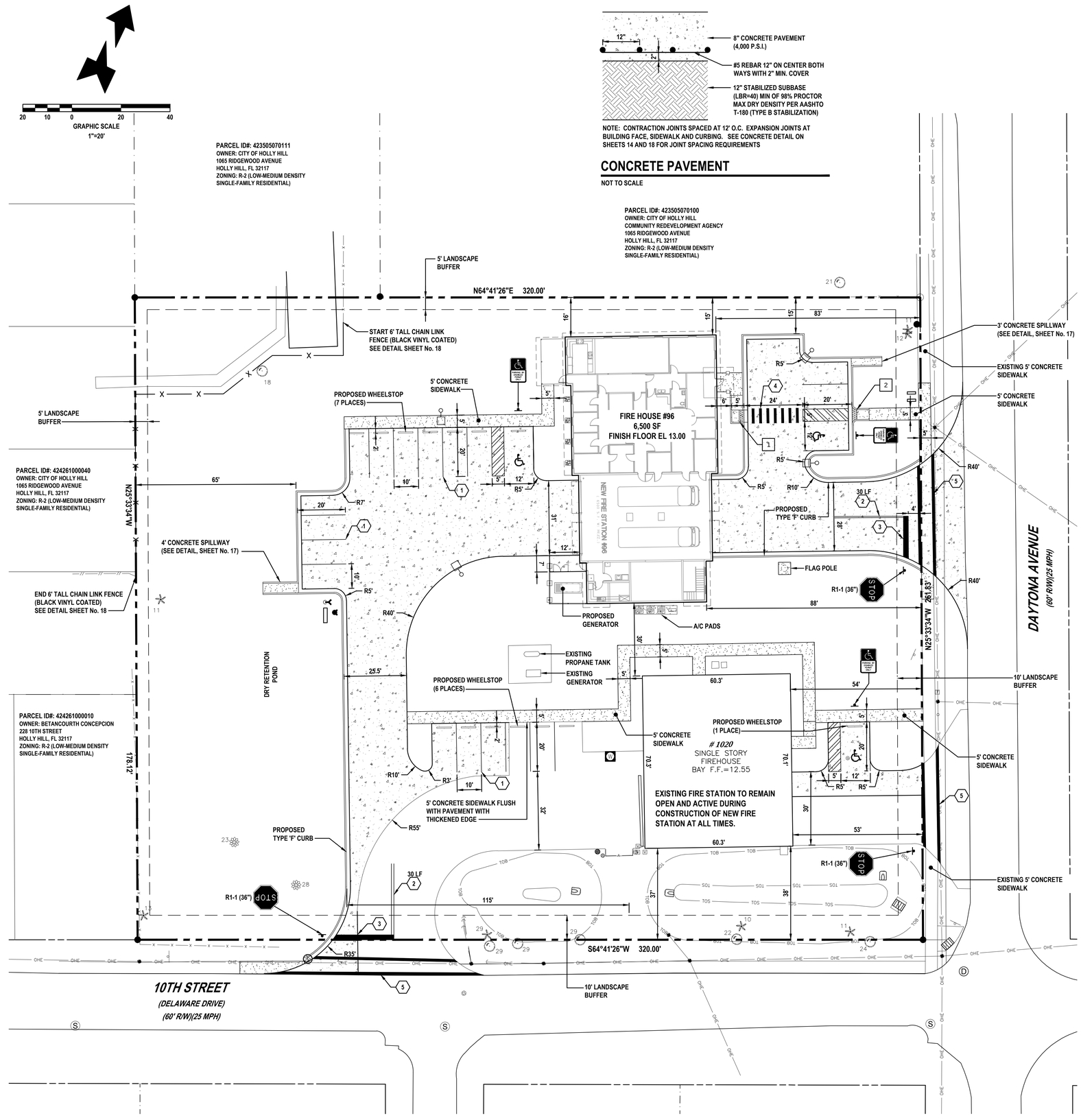

GENERAL NOTES:

1. CITY OF HOLLY HILL BUILDING PERMITS ARE REQUIRED FOR BUILDING, CANOPIES, DUMPSTER ENCLOSURE, LIGHT POLES, FENCE AND SIGNS. CONTRACTOR SHALL BE RESPONSIBLE FOR SUBMITTING APPROPRIATE INFORMATION (ENGINEERING, SPECIFICATIONS, ETC.) AT TIME OF BUILDING PERMIT.
2. ALL CONSTRUCTION IN THE FDOT ROW SHALL CONFIRM TO THE LATEST EDITIONS OF THE FDOT DESIGN STANDARDS [INDEXES], THE FDOT STANDARD SPECIFICATIONS FOR ROAD AND BRIDGE CONSTRUCTION AND THE FDOT UTILITY ACCOMMODATION MANUAL.
3. ALL DIMENSIONS AND TIES ARE TO THE EDGE OF PAVEMENT AND OUTSIDE FACE OF BUILDING.
4. ALL IMPROVEMENTS SHALL BE STAKED FOR CONSTRUCTION BY MEANS OF DIGITAL COORDINATES BY SURVEYOR UTILIZING GEODETIC TOTAL STATION OR GPS. SCALING OF DRAWINGS FOR PURPOSES OF STAKING ARE AT THE SURVEYOR'S RISK.
5. THE CONTRACTOR SHALL COORDINATE WITH THE EXISTING ADJACENT BUSINESSES TO ENSURE THERE IS NO DISRUPTION TO THEIR RESPECTIVE OPERATIONS.
6. THE CONTRACTOR AT ITS OWN DISCRETION SHALL MAINTAIN THE CONSTRUCTION SITE SECURE FROM TRESPASS.
7. SOD ALL DISTURBED AREAS IN RIGHT-OF-WAY WITH BAHIA SOD.
8. ALL CURB RAMPS SHALL COMPLY WITH SECTION 406 OF FLORIDA ACCESSIBILITY CODE FOR BUILDING CONSTRUCTION (FACBC).
9. ALL PAVEMENT EDGE SHALL HAVE TYPE "D" CURBING UNLESS OTHERWISE NOTED ON THESE PLANS.
10. ALL WALL-MOUNTED EQUIPMENT SUCH AS ELECTRICAL METERS, IRRIGATION METERS, PHONE/CABLE BOXES, EXTERNAL VENTS AND LOUVERS, ETC., SHALL BE PAINTED TO MATCH THE WALL ON WHICH IT IS MOUNTED OR OTHERWISE CONSISTENT WITH THE COLOR(S) OF THE BUILDING.
11. ALL MATERIALS, MACHINERY AND VEHICLES SHALL BE STORED ON-SITE IN AN ORDERLY ORGANIZED FASHION.
12. COMMERCIAL IMPACT FEE SHALL BE CALCULATED, DUE AND PAYABLE WITHIN 30 DAYS OF INITIATION OF PERMANENT ELECTRIC SERVICE.
13. CONTRACTOR TO PROVIDE PREMISE IDENTIFICATION FOR BUILDING DURING CONSTRUCTION.
14. ALL CONSTRUCTION IN THE FDOT ROW SHALL CONFORM TO THE LATEST EDITIONS OF THE FDOT DESIGN STANDARDS [INDEXES], THE FDOT STANDARD SPECIFICATIONS FOR ROAD AND BRIDGE CONSTRUCTION, AND THE FDOT UTILITY ACCOMMODATION MANUAL.
15. EXISTING FIRE STATION TO REMAIN ACTIVE DURING NEW CONSTRUCTION. COORDINATE WITH FIRE CHIEF TO MINIMIZE CONFLICTS.

PAVEMENT MARKING NOTES:

1. ALL SIGNS SHALL BE PLACED IN ACCORDANCE WITH FDOT INDEX NO. 700-101 AND THE "MANUAL ON UNIFORM TRAFFIC CONTROL DEVICES FOR STREETS AND HIGHWAYS" (LATEST EDITION).
2. PAINTED PAVEMENT MARKINGS SHALL BE APPLIED AFTER PAVEMENT SURFACE HAS CURED. SURFACE SHALL BE FREE OF FINE SAND AND DEBRIS PRIOR TO APPLICATIONS.
3. APPLY PAINTED PAVEMENT MARKINGS AT LAST STAGE OF CONSTRUCTION AFTER LANDSCAPE PLANTINGS ARE INSTALLED.
4. PAINT SHALL BE SHERWIN WILLIAMS LOW-VOC ACRYLIC PRO PARK PAINT, APPLY PER MANUFACTURER'S RECOMMENDATIONS. REFER TO DRAWINGS FOR LOCATIONS OF SPECIFIC COLORS.
5. ALL STOP BARS SHALL BE THERMOPLASTIC.
6. ALL REFLECTIVE PAVEMENT MARKERS ARE TO BE PLACED IN ACCORDANCE WITH FDOT STANDARD INDEX NO. 706-001.
7. LOCATION OF SIGNS IS APPROXIMATE ONLY AND IS SUBJECT TO CHANGE AS DIRECTED BY THE ENGINEER.
8. FOR ADDITIONAL DETAILS SEE INDEX NO. 700-010, 711-001 AND 711-002.
9. ALL TRAFFIC CONTROL SIGNS SHALL BE FABRICATED USING 3M BRAND DIAMOND GRADE VIP REFLECTIVE SHEETING ON MINIMUM .08 GA ALUMINUM BLANKS. ALL SIGNS SHALL BE INSTALLED ON 2"x2" SQUARE STEEL POSTS WITH 3/8" HOLES SPACED AT 1" ON CENTER.

LEGEND

- TYPE "F" CURB
- 2' ENVIRONMENTAL CURB
- TRANSITION FROM 'F' CURB TO FLUSH
- TRANSITION FROM 'F' CURB TO ENVIRONMENTAL CURB
- CONCRETE WHEEL STOP
- 24" ADA MAT
- SITE LIGHTING SEE SHEET ARCHITECTURAL PLANS FOR DETAILS

PAVING LEGEND

CONCRETE PAVEMENT — 8" CONCRETE (4,000 P.S.I. @ 28 DAYS) #5 REBAR 12" ON CENTER BOTH WAYS WITH 2" MINIMUM COVER
12" STABILIZED SUBGRADE (LBR 40) MIN OF 98% MODIFIED PROCTOR MAX DRY DENSITY PER ASTM D1557, AASHTO T-180 (6" LIFTS) SEE DETAILS, THIS SHEET AND SHEET No. 14 & 18

CONCRETE SIDEWALK — 4" THICK CONCRETE (3,000 P.S.I. @ 28 DAYS), CLASS I, APPROVED FDOT DESIGN MIX (FDOT INDEX No. 522-001) SEE DETAIL SHEET No. 13 & 18

STRIPING LEGEND:

1. 6" SOLID WHITE LINE (TYPICAL)
2. 6" SOLID DOUBLE YELLOW LINE (TYPICAL)
3. 24" WHITE STOP BAR (THERMOPLASTIC)
4. STANDARD EMPHASIS CROSSWALK (THERMOPLASTIC)
5. SPECIAL EMPHASIS CROSSWALK (THERMOPLASTIC)

CURB RAMP LEGEND:

1. SIDEWALK CURB RAMP (CR-C) WITH 24" DETECTABLE WARNING MAT PER FDOT INDEX 522-002
2. SIDEWALK CURB RAMP (CR-E) WITH 24" DETECTABLE WARNING MAT PER FDOT INDEX 522-002

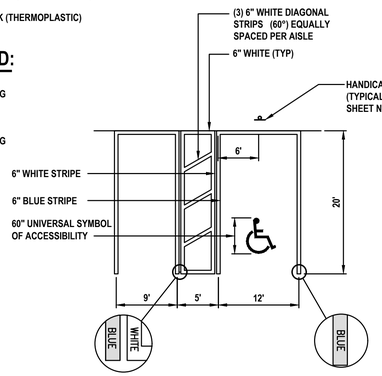

NOTE: MAXIMUM PAVEMENT SLOPE 1/4" PER FOOT ANY DIRECTION IN SPACE AND AISLE.

(UNIVERSAL SPACES PER FLORIDA ADA)

HANDICAP PARKING STRIPING

SCALE: 1" = 10'

REVISIONS

DATE	DESCRIPTION
4/11/23	CITY COMMENTS
5/17/23	ARCHITECT COMMENTS
5/18/23	BIDDING

1230 North US1, Suite 3
Ormond Beach, Florida 32174
Phone (386) 872-7784
www.Newkirk-Engineering.com
C.A. # 30209
L.C. # 26000584
© 2013
Civil Engineering
Transportation, CEI &
Landscape Architecture
NEWKIRK ENGINEERING INC.

SITE LAYOUT PLAN
REPLACEMENT FIRE STATION # 96
1020 DAYTONA AVENUE
HOLLY HILL, FL 32117

THIS DRAWING IS THE PROPERTY OF NEWKIRK ENGINEERING ANY USE OR REPRODUCTION IN WHOLE OR PART IS PROHIBITED WITHOUT THE EXPRESSED WRITTEN CONSENT OF NEWKIRK ENGINEERING COPYRIGHT 2013 ALL RIGHTS RESERVED

THIS ITEM HAS BEEN DIGITALLY SIGNED AND SEALED BY HARRY NEWKIRK, PE # 62971 ON

HARRY NEWKIRK LICENSE NO. 62971 STATE OF FLORIDA PROFESSIONAL ENGINEER

PRINTED COPIES OF THIS DOCUMENT ARE NOT CONSIDERED SIGNED AND SEALED AND THE SIGNATURE MUST BE VERIFIED ON ANY ELECTRONIC COPIES.

PROJECT No:	2022-205
DATE:	MAY 18, 2023
DESIGN BY:	HHN
DRAWN BY:	NWS
CHECKED BY:	HHN
SCALE:	1" = 20'

DRAWING NUMBER

6

Attachment: Exhibit C - Fire Station #96 Bid Set (2023-R-55 : Fire Station Construction)

SUMMARY OF DRAINAGE:

THE MINIMUM WATER QUALITY TREATMENT VOLUME REQUIRED IS EQUAL TO 1.25-INCHES OVER THE IMPERVIOUS SURFACE PLUS 0.5-INCHES OF RUNOFF OVER THE DRAINAGE BASIN. STORMWATER TREATMENT IS PROVIDED BY A DRY RETENTION SYSTEM. THE TREATMENT SYSTEM IS DESIGNED SO THAT THE POST DEVELOPMENT DISCHARGE RATE AND VOLUME DOES NOT EXCEED THE PRE-DEVELOPMENT DISCHARGE RATE AND VOLUME FOR THE MEAN ANNUAL, 25 YEAR 24 HOUR AND 100 YEAR 24 HOUR STORM EVENTS.

PERMITTED RUNOFF			OFF	
Design Storm		Rainfall (inches)	Charge Rate (cfs)	Inflow Volume (ft^3)
Mean Annual, 24-Hour	PRE	5.30	0.00	0
25 Year, 24-Hour	PRE	9.50	0.00	0
100 Year, 24-Hour	PRE	12.40	1.28	6,732

PROPOSED - DISCHARGE			OFF		STAGE				
Design Storm		Rainfall (inches)	Inflow Rate (cfs)	Inflow Volume (ft^3)	POND 1	POND 2	POND 3	POND 4	POND 5
Mean Annual, 24-Hour	POST	5.30	0.00	0	9.02	9.01	9.02	9.17	8.61
25 Year, 24-Hour	POST	9.50	0.00	0	10.02	10.02	10.02	10.02	10.02
100 Year, 24-Hour	POST	12.40	0.01	41	10.76	10.76	10.76	10.75	10.75
					11.00	**11.00**	**11.00**	**11.00**	**11.00**

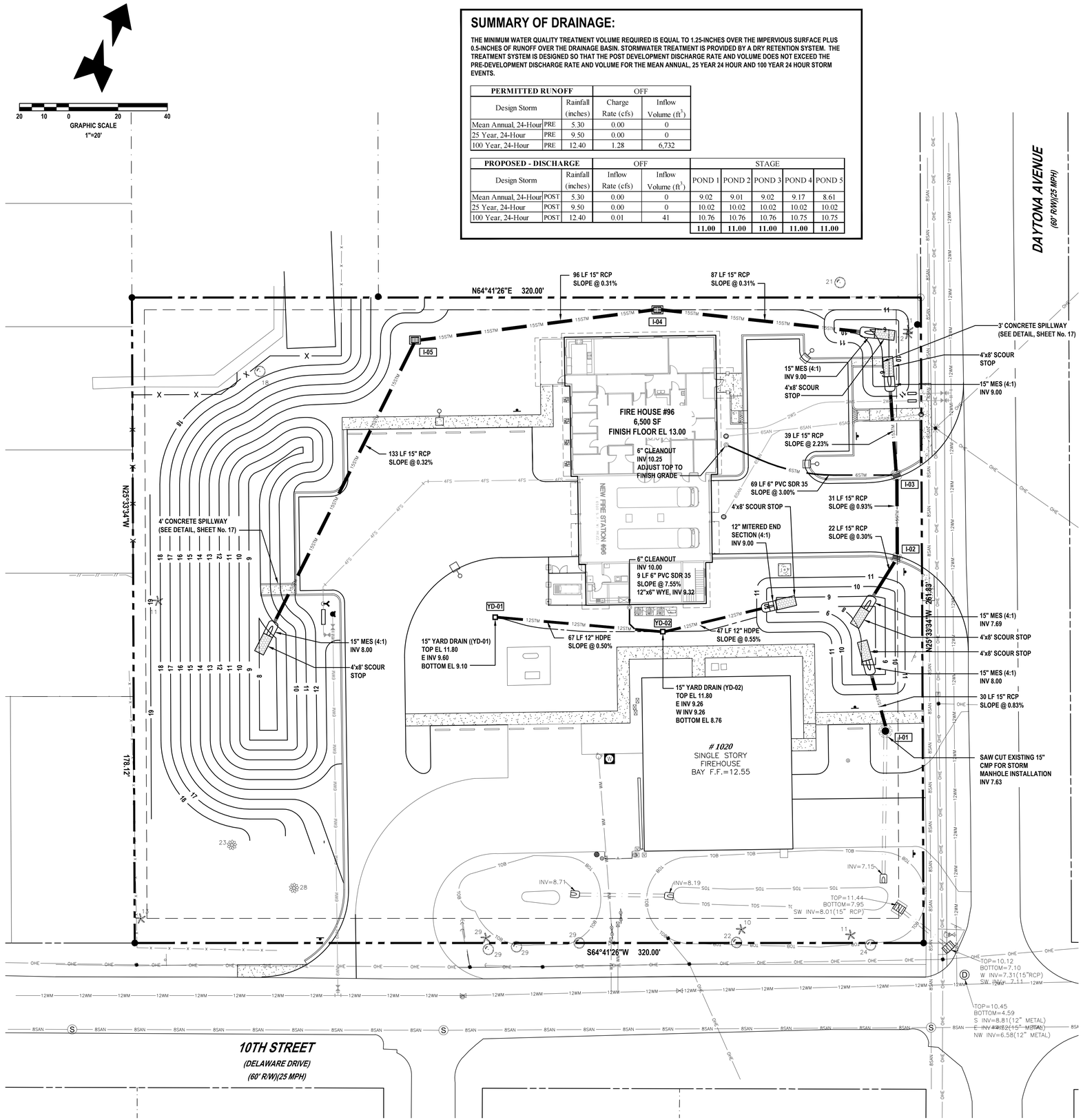

GENERAL DRAINAGE NOTES:

1. THE CONTRACTOR SHALL BE RESPONSIBLE FOR ANY DAMAGE TO DRAINAGE SYSTEM AND SHALL RESTORE ANY DAMAGED STRUCTURES.
2. ALL PIPE FROM THE BUILDING DRAINS SHALL BE SMOOTH INTERIOR PVC SDR 35 OR HDPE (SICE) PIPE WITH WATERTIGHT JOINTS BY THE MANUFACTURER.
3. ALL STORM PIPE SHALL BE CONSTRUCTED OF REINFORCED CONCRETE PIPE (RCP). RCP JOINTS SHALL BE WRAPPED WHERE APPLICABLE PER FDOT SPECIFICATIONS.
4. THE CONTRACTOR SHALL SUBMIT SHOP DRAWINGS OF ALL MATERIAL AND STRUCTURES TO THE ENGINEER (NEWKIRK ENGINEERING, INC.) FOR APPROVAL PRIOR TO THE PRECONSTRUCTION MEETING.
5. CONTRACTOR TO PLACE FILTER FABRIC BETWEEN DRAINAGE STRUCTURES AND TOPS TO PREVENT SOIL INTRUSION. THE FABRIC SHALL BE PERIODICALLY CLEANED OF SAND A DEBRIS FABRIC SHALL REMAIN IN PLACE UNTIL PAVING IS COMPLETE.
6. ALL EXISTING STRUCTURES, UNLESS OTHERWISE NOTED TO REMAIN. FENCING TREES, & ETC., WITHIN THE CONSTRUCTION AREA SHALL BE REMOVED AND DISPOSED OF OFFSITE.
7. ALL DRAINAGE STRUCTURES SHALL BE PRE-CAST PER FDOT SPECIFICATIONS.
8. ALL DRAINAGE STRUCTURES AND STORM SEWER PIPES SHALL MEET HEAVY DUTY TRAFFIC (H20) LOADING AND BE INSTALLED ACCORDINGLY PER FDOT STANDARD SPECIFICATIONS AND MANUFACTURES SPECIFICATIONS RESPECTIVELY.
9. ALL DRAINAGE STRUCTURES AND PIPES SHALL BE CLEANED OF SAND AT THE LAST STAGE OF CONSTRUCTION PRIOR TO THE FINAL INSPECTION.
10. ALL STORM INLET GRATES SHALL BE STEEL (TRAFFIC RATED).

STORM STRUCTURE SCHEDULE

I.D.	SIZE	TYPE BOT	TYPE TOP	TOP ELEV	BOT ELEV	N INV	S INV	E INV	W INV
I-01	4'-0"	A	M.H.	RIM 11.50	6.50	15" 7.75	15" 7.63	---	---
I-02	4'-0"	A	9	EOP 10.77	6.76	15" 7.76	15" 7.76	---	---
I-03	4'-0"	A	9	EOP 10.77	6.87	15" 8.13	15" 7.87	---	6" 8.18
I-04	---	B	C	11.80	7.73	---	---	15" 8.73	15" 8.73
I-05	---	B	C	11.80	7.43	---	15" 8.43	15" 8.43	---

1. ROUND STRUCTURE BOTTOMS ARE FDOT ALTERNATE 'A'.
2. SQUARE/RECTANGULAR STRUCTURE BOTTOMS ARE FDOT ALTERNATE 'B'.
3. 4'-0" DIAMETER AND SMALLER AND 3'-6" SQUARE STANDARD STRUCTURE BOTTOMS ARE FDOT TYPE DESIGNATED 'P' LARGER STANDARD STRUCTURE BOTTOMS ARE DESIGNATED TYPE 'J'.
4. INSTALL 12"x12" WEEP HOLE AT BOTTOM OF STRUCTURE WITH 24"x24"x12" THICK AGGREGATE BED WRAPPED WITH FILTER FABRIC.

DRAINAGE PIPE MINIMUM SLOPE REQUIREMENTS

PIPE SIZE (IN)	SELF-CLEANSING VELOCITY (FPS)	MANNINGS (N)	RADIUS (FT)	CROSS-SECTIONAL AREA (FT)	WETTED PERIMETER	MINIMUM SLOPE (FT / 100 FT)
15	3.0	0.012	0.625	1.227	FULL & ½ FULL	0.0028

STORMWATER LEGEND

- PROPOSED U - TYPE CONCRETE ENDWALL
- PROPOSED TYPE "9" INLET
- 15STM — PROPOSED STORM PIPE

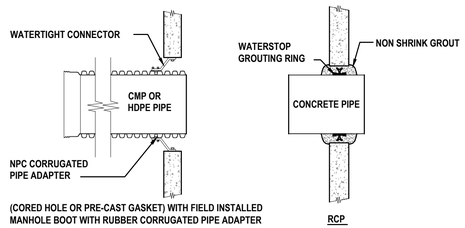

(CORED HOLE OR PRE-CAST GASKET) WITH FIELD INSTALLED MANHOLE BOOT WITH RUBBER CORRUGATED PIPE ADAPTER

WATER-TIGHT PIPE TO MANHOLE CONNECTION DETAIL

PRECAST HOLES REQUIRED

NOT TO SCALE

WARNING !!

CONTRACTOR SHALL TAKE ALL PRECAUTIONS DURING CONSTRUCTION TO AVOID CONTACT WITH EXISTING UNDERGROUND UTILITIES, GAS MAINS AND OVERHEAD ELECTRIC IN THE RIGHT-OF-WAY.

REVISIONS

DATE	DESCRIPTION
4/11/23	CITY COMMENTS
5/17/23	ARCHITECT COMMENTS
5/18/23	BIDDING

1230 North US1, Suite 3
Ormond Beach, Florida 32174
Phone (386) 872-7784
www.Newkirk-Engineering.com
C.A. # 30209
L.C. # 26000584
Civil Engineering
Transportation, CEI &
Landscape Architecture
NEWKIRK ENGINEERING INC.

DRAINAGE PLAN
REPLACEMENT FIRE STATION # 96
1020 DAYTONA AVENUE
HOLLY HILL, FL 32117

THIS DRAWING IS THE PROPERTY OF NEWKIRK ENGINEERING ANY USE OR REPRODUCTION IN WHOLE OR PART IS PROHIBITED WITHOUT THE EXPRESSED WRITTEN CONSENT OF NEWKIRK ENGINEERING COPYRIGHT 2013 ALL RIGHTS RESERVED

THIS ITEM HAS BEEN DIGITALLY SIGNED AND SEALED BY HARRY NEWKIRK, PE # 62971 ON

HARRY NEWKIRK LICENSE NO. 62971 STATE OF FLORIDA PROFESSIONAL ENGINEER

PRINTED COPIES OF THIS DOCUMENT ARE NOT CONSIDERED SIGNED AND SEALED AND THE SIGNATURE MUST BE VERIFIED ON ANY ELECTRONIC COPIES.

PROJECT No:	2022-205
DATE:	MAY 18, 2023
DESIGN BY:	HHN
DRAWN BY:	NWS
CHECKED BY:	HHN
SCALE:	1" = 20'

DRAWING NUMBER

7

One Nation... One Number... 811 Know what's below. Call before you dig.

Attachment: Exhibit C - Fire Station #96 Bid Set (2023-R-55 : Fire Station Construction)

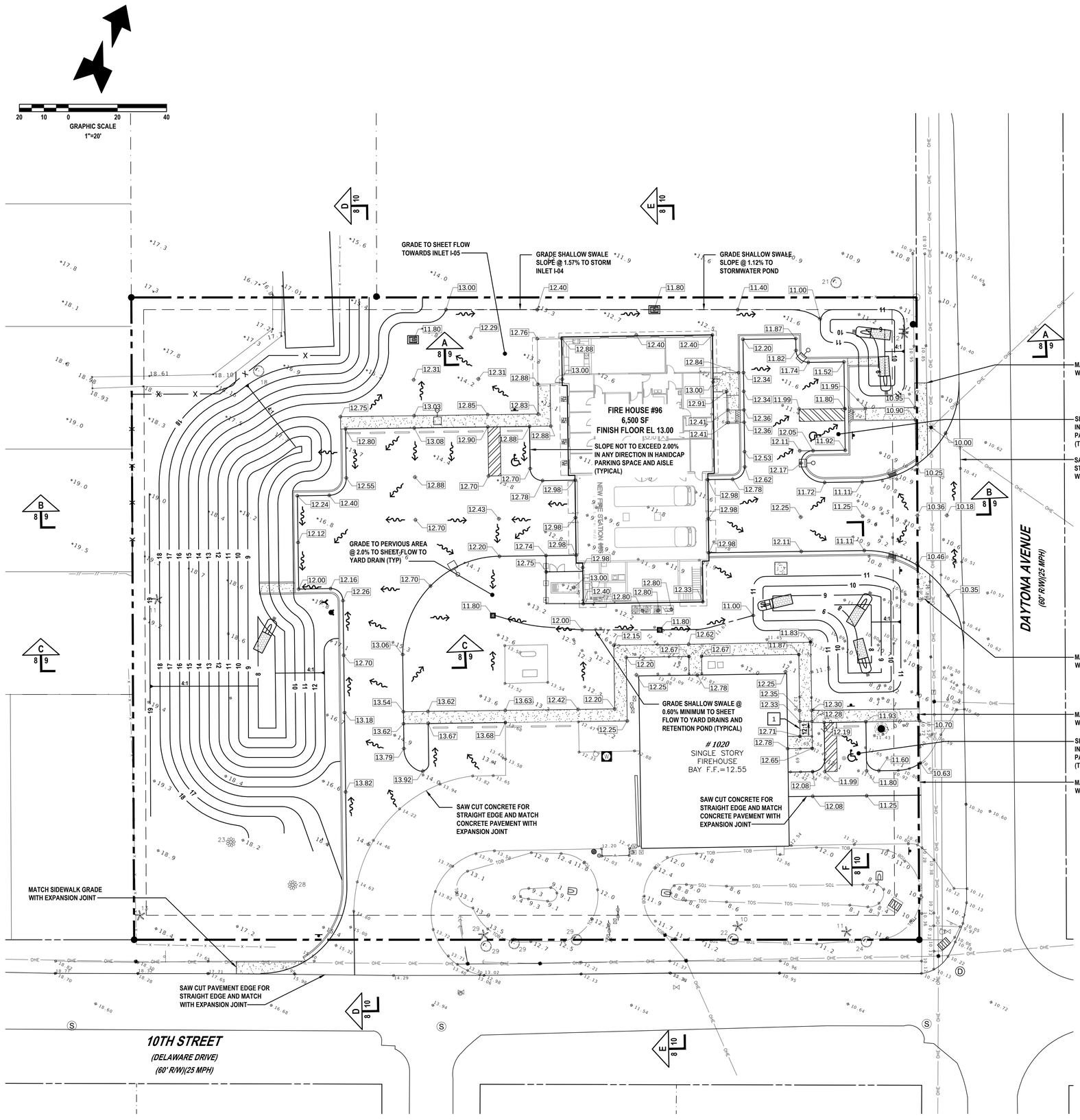

One Nation... One Number... 811
Know what's below. Call before you dig.

WARNING !!

CONTRACTOR SHALL TAKE ALL PRECAUTIONS DURING CONSTRUCTION TO AVOID CONTACT WITH EXISTING UNDERGROUND UTILITIES, GAS MAINS AND OVERHEAD ELECTRIC IN THE RIGHT-OF-WAY.

GENERAL GRADING NOTES:

1. CROSS SLOPES OF ACCESSIBLE PARKING SPACES AND ACCESS AISLE SHALL NOT EXCEED 1:48 IN ACCORDANCE WITH SECTION 502.4 OF FLORIDA ACCESSIBILITY CODE FOR BUILDING CONSTRUCTION (FACBC).
2. SIDEWALK TO BE FLUSH WITH FINISH FLOOR AT BUILDING ENTRANCES.
3. ALL SIDEWALK LANDINGS SHALL HAVE SLOPES NO GREATER THAN 1/4 INCH / 1 FOOT IN MANEUVERING SPACES AT ALL DOORWAYS.
4. ALL SIDEWALKS SHALL HAVE A 1.0% CROSS SLOPE (2.0% MAXIMUM).
5. ALL HANDICAP PARKING SPACES SHALL BE GRADED NOT TO EXCEED 2.0% SLOPE IN ANY DIRECTION.
6. ALL CURB RAMPS SHALL COMPLY WITH SECTION 406 OF FACBC.
7. ALL IMPROVEMENTS SHALL BE STAKED FOR CONSTRUCTION BY MEANS OF DIGITAL COORDINATES BY SURVEY OR UTILIZING GEODETIC TOTAL STATION. SCALING OF DRAWINGS FOR PURPOSES OF STAKING ARE AT THE SURVEYOR.

GENERAL EARTHWORK NOTES:

1. IF ANY MUCK OR MUCK-LIKE MATERIAL IS DISCOVERED, IT WILL BE REQUIRED TO BE REMOVED, BACKFILLED WITH APPROPRIATE FILL, COMPACTED, AND TESTED USING AASHTO T-180 MODIFIED PROCTOR METHOD.
2. ALL FILLING IS TO BE PERFORMED IN ONE-FOOT LIFTS. THE COMPACTION REQUIREMENT IS 98% FOR PAVED AREAS AND 95% FOR UNPAVED AREAS PER AASHTO T-180 MODIFIED PROCTOR TEST.
3. TEMPORARY FILL STOCKPILING IS NOT PERMITTED IN LIFTS GREATER THAN SIX FEET.
4. SOILS ARE TO BE STABILIZED BY WATER OR OTHER MEANS DURING CONSTRUCTION. THIS IS INTENDED TO REDUCE SOIL EROSION AND THE IMPACT TO NEIGHBORING COMMUNITIES.
5. ONCE AN AREA IS SEEDED OR SODDED, IT MUST BE MAINTAINED TO ALLOW THE GRASS TO GROW.
6. ALL NON-PAVED AREAS MUST BE PLANTED, GRASSED, OR MULCHED.

GRADING LEGEND:

- 85 — EXISTING CONTOUR
- 72 — PROPOSED CONTOUR
- DRAINAGE FLOW ARROW
- +72.0 EXISTING SPOT ELEVATION
- 32.00 PROPOSED SPOT ELEVATION
- M.E.G. MATCH EXISTING GRADE

BENCHMARK INFORMATION:

#1 TOP OF MANHOLE ELEVATION = 10.48'

#2 TOP OF MANHOLE ELEVATION = 13.65'

VERTICAL DATA
ELEVATIONS REFER TO (NAVD) NORTH AMERICAN VERTICAL DATUM 1988 FEET AND DECIMAL PART THEREOF. BENCHMARK REFERENCE NAVD DATUM OF 1988. BENCHMARK IS A NATIONAL GEODETIC DESIGNATION: V 722, ELEVATION = 12.09 FEET.

CURB RAMP LEGEND:

1 SIDEWALK CURB RAMP (CR-E) WITH 24" DETECTABLE WARNING MAT PER FDOT INDEX 522-002

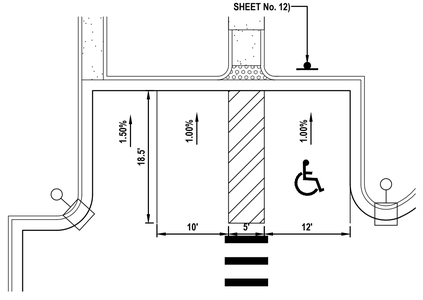

HANDICAP PARKING DETAIL

NOT TO SCALE

REVISIONS

DATE	DESCRIPTION
4/11/23	CITY COMMENTS
5/17/23	ARCHITECT COMMENTS
5/18/23	BIDDING

1230 North US1, Suite 3
Ormond Beach, Florida 32174
Phone (386) 872-7784
www.Newkirk-Engineering.com
C.A. # 30209
L.C. # 26000584
© 2013
Civil Engineering
Transportation, CEI &
Landscape Architecture
NEWKIRK ENGINEERING INC.

GRADING PLAN
REPLACEMENT FIRE STATION # 96
1020 DAYTONA AVENUE
HOLLY HILL, FL 32117

THIS DRAWING IS THE PROPERTY OF NEWKIRK ENGINEERING ANY USE OR REPRODUCTION IN WHOLE OR PART IS PROHIBITED WITHOUT THE EXPRESSED WRITTEN CONSENT OF NEWKIRK ENGINEERING COPYRIGHT 2013 ALL RIGHTS RESERVED

THIS ITEM HAS BEEN DIGITALLY SIGNED AND SEALED BY HARRY NEWKIRK, PE # 62971 ON

HARRY NEWKIRK LICENSE NO. 62971 STATE OF FLORIDA PROFESSIONAL ENGINEER

PRINTED COPIES OF THIS DOCUMENT ARE NOT CONSIDERED SIGNED AND SEALED AND THE SIGNATURE MUST BE VERIFIED ON ANY ELECTRONIC COPIES.

PROJECT No:	2022-205
DATE:	MAY 18, 2023
DESIGN BY:	HHN
DRAWN BY:	NWS
CHECKED BY:	HHN
SCALE:	1" = 20'

DRAWING NUMBER

8

Attachment: Exhibit C - Fire Station #96 Bid Set (2023-R-55 : Fire Station Construction)

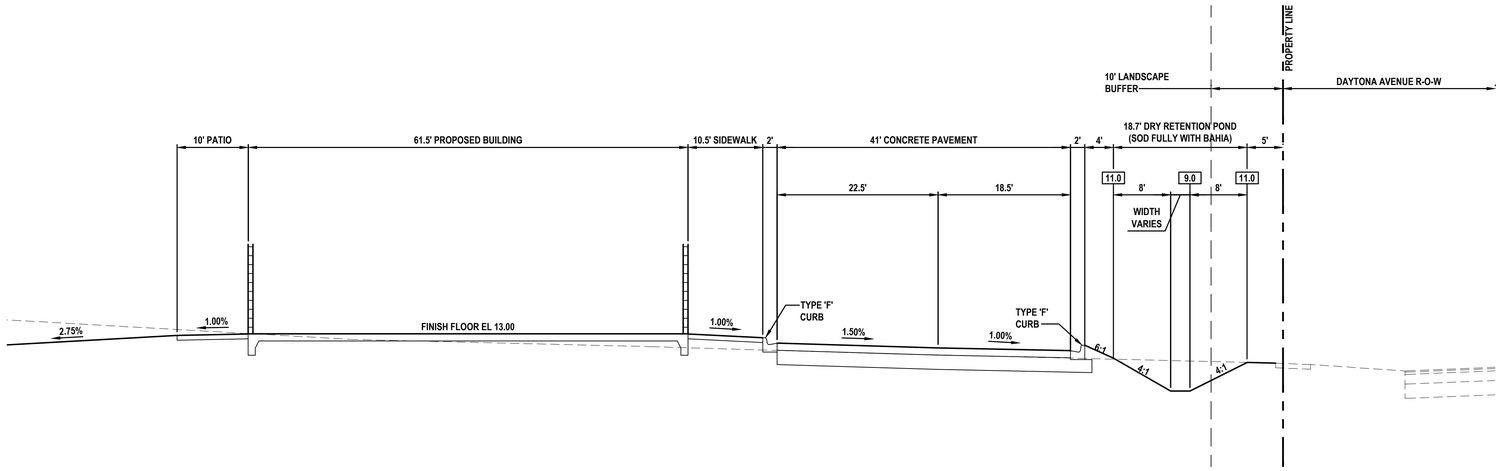

SECTION A

NOT TO SCALE

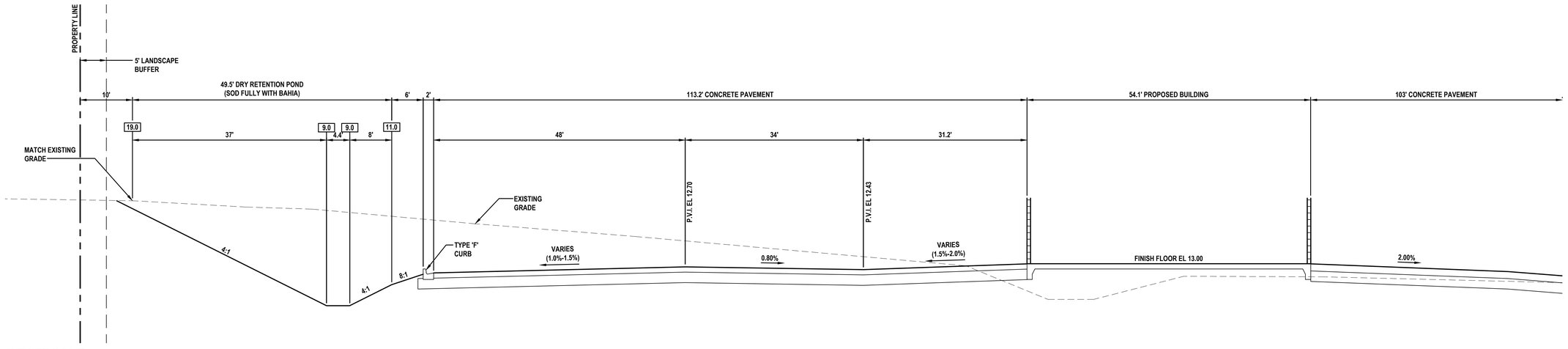

SECTION B

NOT TO SCALE

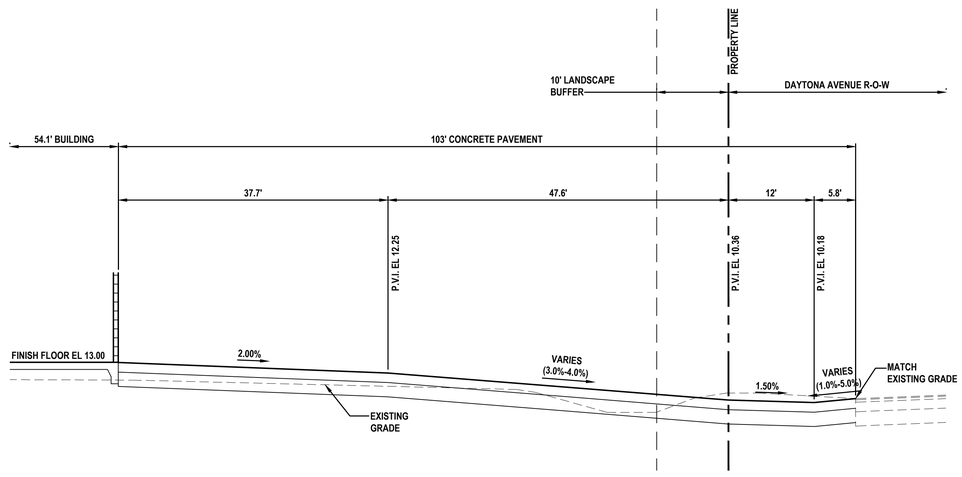

SECTION B

NOT TO SCALE

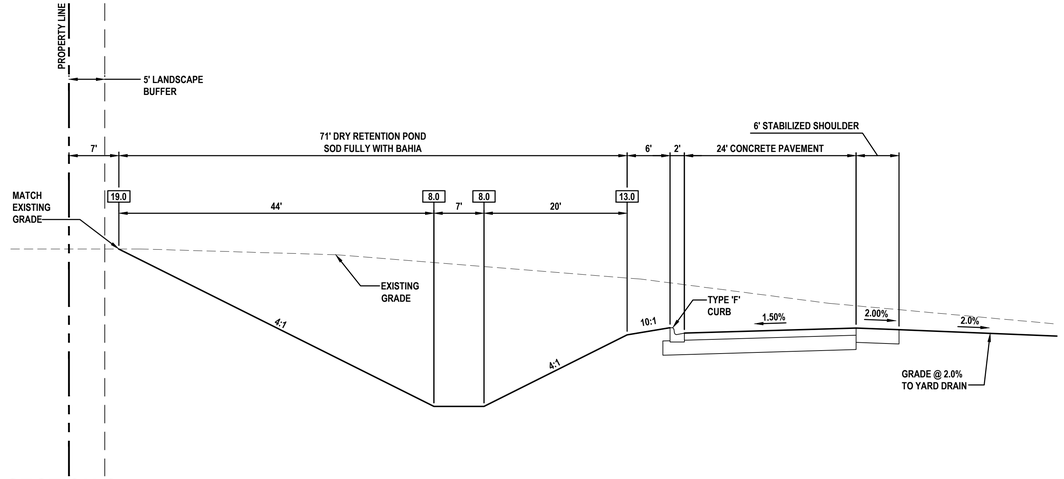

SECTION C

NOT TO SCALE

REVISIONS	
DATE	DESCRIPTION
4/11/23	CITY COMMENTS
5/17/23	ARCHITECT COMMENTS
5/18/23	BIDDING

1230 North US1, Suite 3
Ormond Beach, Florida 32174
Phone (386) 872-7784
www.Newkirk-Engineering.com
C.A. # 30209
L.C. # 26000584
© 2013
Civil Engineering
Transportation, CEI &
Landscape Architecture
NEWKIRK ENGINEERING INC.

CROSS SECTIONS

REPLACEMENT FIRE STATION # 96

1020 DAYTONA AVENUE
HOLLY HILL, FL 32117

THIS DRAWING IS THE PROPERTY OF NEWKIRK ENGINEERING ANY USE OR REPRODUCTION IN WHOLE OR PART IS PROHIBITED WITHOUT THE EXPRESSED WRITTEN CONSENT OF NEWKIRK ENGINEERING COPYRIGHT 2013 ALL RIGHTS RESERVED

THIS ITEM HAS BEEN DIGITALLY SIGNED AND SEALED BY HARRY NEWKIRK, PE # 62971 ON

HARRY NEWKIRK LICENSE NO. 62971 STATE OF FLORIDA PROFESSIONAL ENGINEER

PRINTED COPIES OF THIS DOCUMENT ARE NOT CONSIDERED SIGNED AND SEALED AND THE SIGNATURE MUST BE VERIFIED ON ANY ELECTRONIC COPIES.

PROJECT No:	2022-205
DATE:	MAY 18, 2023
DESIGN BY:	HHN
DRAWN BY:	NWS
CHECKED BY:	HHN
SCALE:	

DRAWING NUMBER

9

Attachment: Exhibit C - Fire Station #96 Bid Set (2023-R-55 : Fire Station Construction)

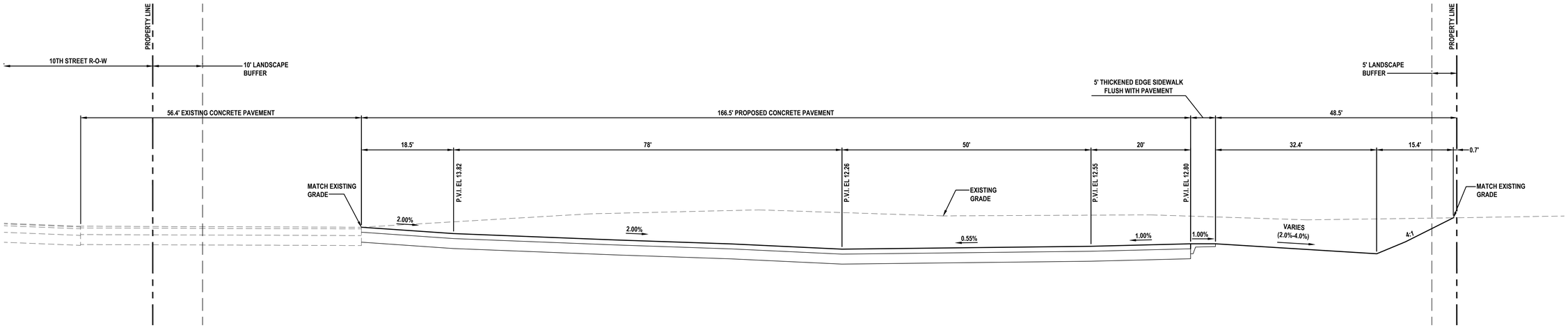

SECTION D

NOT TO SCALE

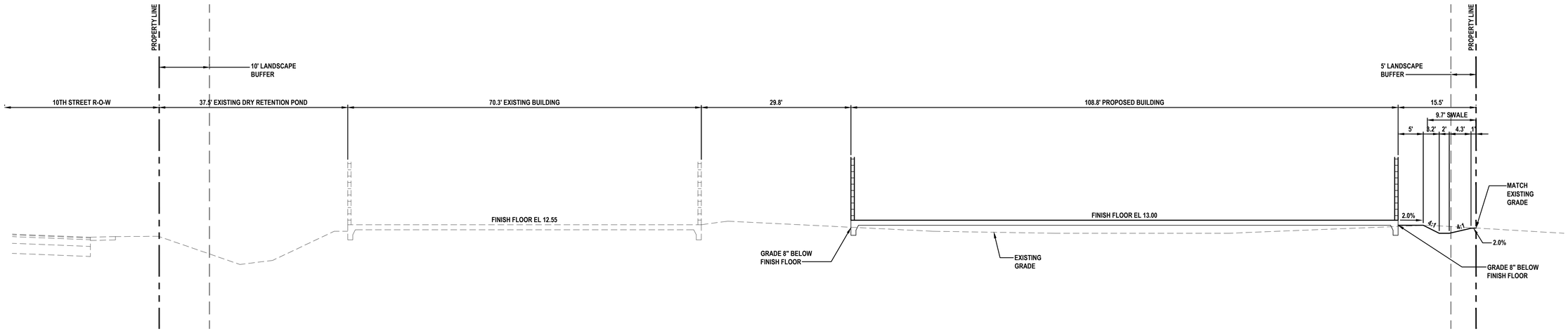

SECTION E

NOT TO SCALE

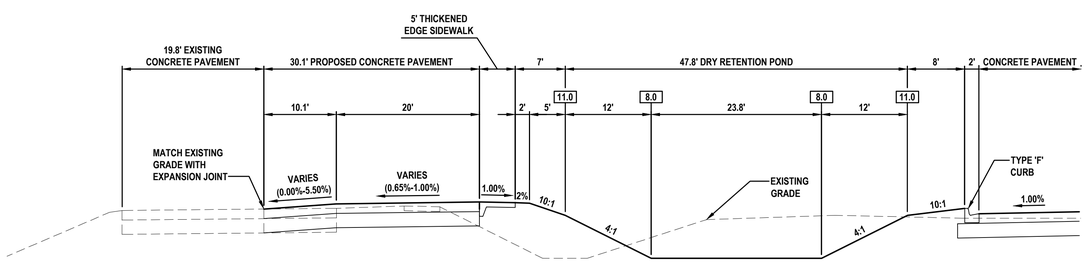

SECTION F

NOT TO SCALE

REVISIONS

DATE	DESCRIPTION
4/11/23	CITY COMMENTS
5/17/23	ARCHITECT COMMENTS
5/18/23	BIDDING

1230 North US1, Suite 3
Ormond Beach, Florida 32174
Phone (386) 672-7784
www.Newkirk-Engineering.com
C.A. # 30209
L.C. # 26000584
© 2013
Civil Engineering
Transportation, CEI &
Landscape Architecture
NEWKIRK ENGINEERING INC.

CROSS SECTIONS

REPLACEMENT FIRE STATION # 96

1020 DAYTONA AVENUE
HOLLY HILL, FL 32117

THIS DRAWING IS THE PROPERTY OF NEWKIRK ENGINEERING ANY USE OR REPRODUCTION IN WHOLE OR PART IS PROHIBITED WITHOUT THE EXPRESSED WRITTEN CONSENT OF NEWKIRK ENGINEERING COPYRIGHT 2013 ALL RIGHTS RESERVED

THIS ITEM HAS BEEN DIGITALLY SIGNED AND SEALED BY HARRY NEWKIRK, PE # 62971 ON

HARRY NEWKIRK LICENSE NO. 62971 STATE OF FLORIDA PROFESSIONAL ENGINEER

PRINTED COPIES OF THIS DOCUMENT ARE NOT CONSIDERED SIGNED AND SEALED AND THE SIGNATURE MUST BE VERIFIED ON ANY ELECTRONIC COPIES.

PROJECT No:	2022-205
DATE:	MAY 18, 2023
DESIGN BY:	HHN
DRAWN BY:	NWS
CHECKED BY:	HHN
SCALE:	

DRAWING NUMBER

10

Attachment: Exhibit C - Fire Station #96 Bid Set (2023-R-55 : Fire Station Construction)

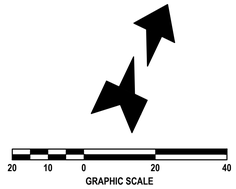

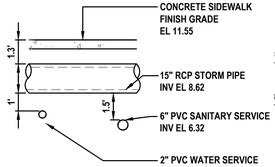

CONFLICT POINT 1

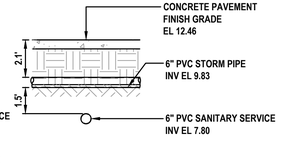

CONFLICT POINT 2

UTILITY CONFLICT DETAIL

NOT TO SCALE

REQUIRED FIRE FLOW:

"SITE DESIGNED IN ACCORDANCE TO THE FLORIDA FIRE PREVENTION CODE, 7TH EDITION.

FLORIDA BUILDING CODE CONSTRUCTION TYPE:	V - SPRINKLERED
FIRE AREA:	6,500 SF
REQUIRED FIRE FLOW:	2,250 GPM @ 2 HOURS
FIRE SPRINKLER SYSTEM REDUCTION (75%)	1,687 GPM
REQUIRED FIRE FLOW	563 GPM @ 2 HOURS USE 1,000 GPM @ 2 HOURS (MIN.)

BASED ON NFPA 18.4.5.2.1, REDUCTION IN REQUIRED FIRE FLOW OF 75% SHALL BE PERMITTED WHEN THE BUILDING IS PROTECTED THROUGHOUT BY AN APPROVED SPRINKLER SYSTEM. THE RESULTING FIRE FLOW SHALL NOT BE LESS THAN 1,000 GPM.

PROPOSED UTILITY LEGEND

#FM	FORCE MAIN (# INDICATES SIZE)
#SAN	SANITARY SEWER (# INDICATES SIZE)
#WS	POLYETHYLENE WATER SERVICE (# INDICATES SIZE)
#WM	WATER MAIN (# INDICATES SIZE)
#FS	FIRE SERVICE (# INDICATES SIZE)
#GAS	GAS SERVICE (# INDICATES SIZE)
#UGE	UNDERGROUND ELECTRICAL CONDUIT (# INDICATES SIZE)
BSP	BACTERIOLOGICAL SAMPLING POINT
RPZ	REDUCED PRESSURE BACKFLOW PREVENTER
1	UTILITY CONFLICT (SEE DETAIL, THIS SHEET)
	UTILITY SCHEMATIC (SEE DETAIL, THIS SHEET)

GENERAL WATER NOTES:

1. THE CITY OF HOLLY HILL WATER UTILITY DEPARTMENT SHALL BE NOTIFIED PRIOR TO BEGINNING ANY WATER SYSTEM CONSTRUCTION.
2. ALL WATER DISTRIBUTION CONSTRUCTION SHALL BE IN ACCORDANCE WITH FDEP REGULATIONS AND THE CITY OF HOLLY HILL UTILITY DETAILS AND SPECIFICATIONS (LATEST EDITION).
3. CONTRACTOR IS TO VERIFY THE LOCATION (HORIZONTAL AND VERTICAL) OF ALL EXISTING UTILITIES (UNDERGROUND AND OVERHEAD) PRIOR TO COMMENCEMENT OF CONSTRUCTION. ANY CONFLICTS SHALL BE REPORTED TO THE ENGINEER.
4. CONTRACTOR IS RESPONSIBLE FOR RESTORATION OF ANY EXISTING PAVEMENT, SIDEWALK, CURBING, UTILITIES AND DRAINAGE SYSTEMS DAMAGED DURING CONSTRUCTION. ALL DAMAGED AREAS TO BE RESTORED TO ORIGINAL CONDITION OR BETTER.
5. LOCATION OF TELEPHONE, T.V. CABLE AND ELECTRICAL SERVICE CONNECTIONS TO BE DETERMINED BY APPROPRIATE UTILITIES PERSONNEL IN COOPERATION WITH CONTRACTOR.
6. ALL WATER MAINS SHALL BE LAID ON A FIRM FOUNDATION WITH ALL UNSUITABLE MATERIAL (MUCK, ROCK, COQUINA, ETC.) REMOVED AND REPLACED WITH CLEAN GRANULAR MATERIAL.
7. TRENCHES SHALL BE BACKFILLED WITH MATERIAL ACCEPTABLE TO THE CITY WITH A MINIMUM COMPACTION OF 98 PERCENT (AASHTO-T180).
8. WATER SERVICES FROM 3/4" TO 2" POLYETHYLENE (ENDOTRACE) WITH 30" MINIMUM COVER.
9. WATER MAIN FROM 4" TO 12" SHALL BE PVC CLASS 150 (DR 18) WITH 36" MINIMUM COVER.
10. ALL WATER AND FIRE SERVICES ARE REQUIRED TO HAVE A HARD BODY GATE VALVE OFF THE MAIN LINE.
11. ALL VALVES SHALL BE BOLTED TO TEES.
12. ALL POTABLE WATER PIPE SHALL HAVE "NSF POTABLE WATER" IMPRINTED ON THE PIPE.
13. ALL WATER MAIN FITTINGS 4 INCHES OR LARGER SHALL BE CEMENT LINED DIP.
14. A TAPPING CONTRACTOR ACCEPTABLE TO THE CITY OF HOLLY HILL WILL BE REQUIRED FOR TAPS.
15. THE CONTRACTOR SHALL MAKE ALL ATTEMPTS TO LOCATE BURIED UTILITIES AND NOTIFY THE UTILITY COMPANIES 48 HR. PRIOR TO CONSTRUCTION.
16. UTILITY TRENCH CONSTRUCTION SHALL CONFORM TO CITY OF HOLLY HILL AND OSHA REQUIREMENTS.
17. IN THE CASE WHERE SOLVENT CONTAMINATION IS FOUND IN THE TRENCH, WORK WILL BE STOPPED AND THE PROPER AUTHORITIES NOTIFIED. WITH THE APPROVAL OF THE CITY OF HOLLY HILL UTILITY DEPARTMENT, DUCTILE IRON PIPE, FITTINGS AND APPROVED SOLVENT RESISTANT GASKET MATERIAL SHALL BE USED IN THE CONTAMINATED AREA. THE DUCTILE IRON PIPE WILL EXTEND AT LEAST 100 FEET BEYOND ANY DISCOVERED SOLVENT.

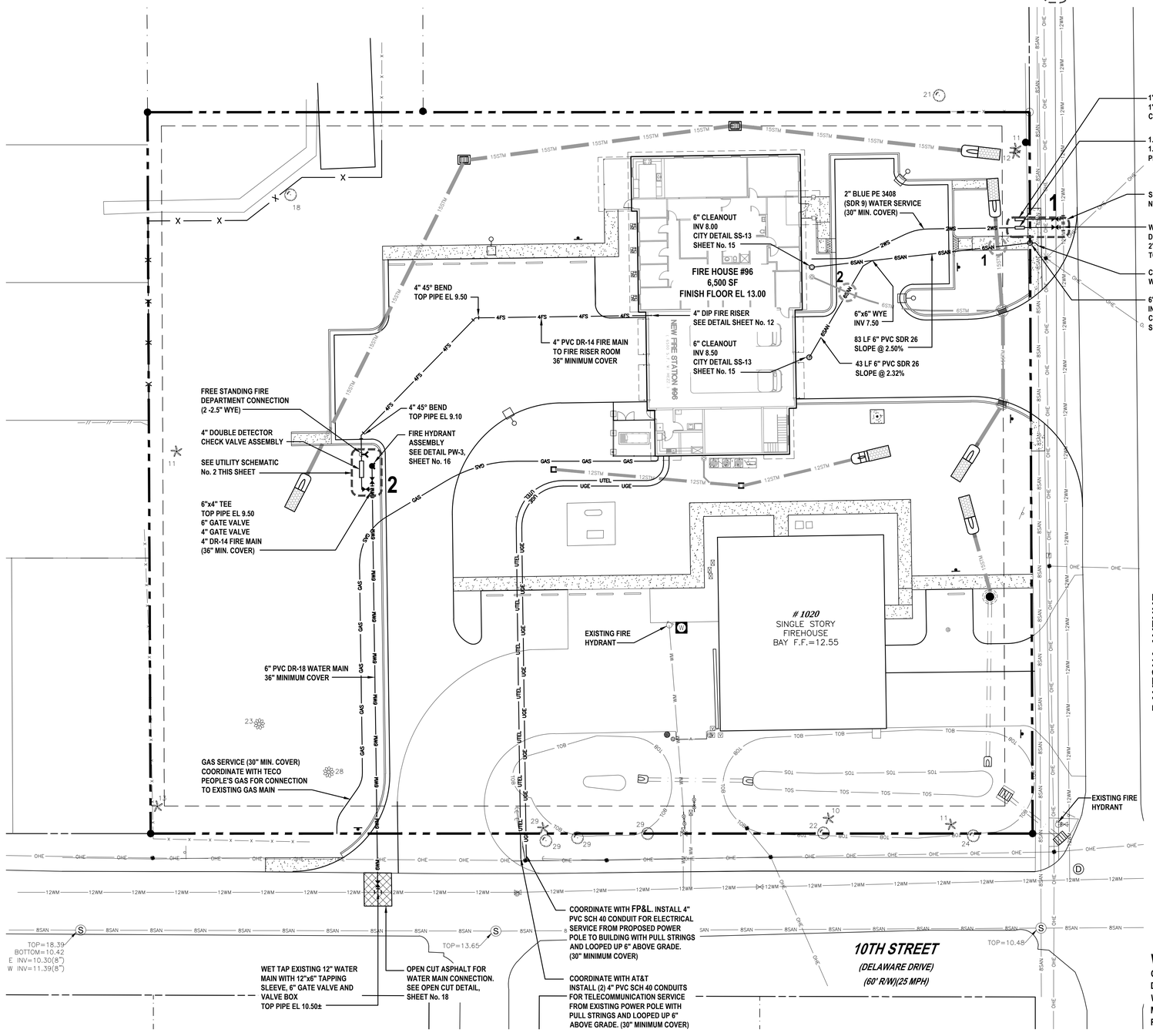

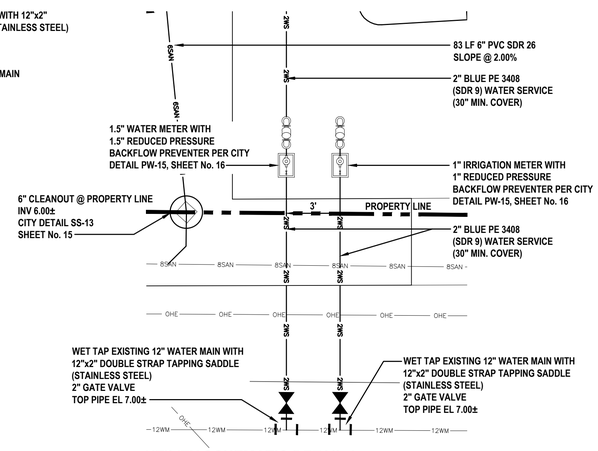

UTILITY SCHEMATIC DETAIL 1

NOT TO SCALE

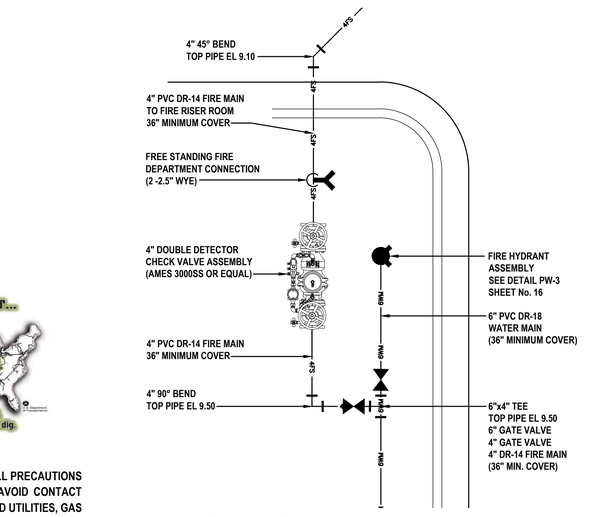

UTILITY SCHEMATIC DETAIL 2

NOT TO SCALE

One Nation... One Number... 811 Know what's below. Call before you dig.

WARNING !!

CONTRACTOR SHALL TAKE ALL PRECAUTIONS DURING CONSTRUCTION TO AVOID CONTACT WITH EXISTING UNDERGROUND UTILITIES, GAS MAINS AND OVERHEAD ELECTRIC IN THE RIGHT-OF-WAY.

REVISIONS

DATE	DESCRIPTION
4/11/23	CITY COMMENTS
5/17/23	ARCHITECT COMMENTS
5/18/23	BIDDING

1230 North US1, Suite 3
Ormond Beach, Florida 32174
Phone (386) 872-7784
www.Newkirk-Engineering.com
C.A. # 30209
L.C. # 26000584
© 2013
Civil Engineering
Transportation, CEI &
Landscape Architecture
NEWKIRK ENGINEERING INC.

UTILITY PLAN
REPLACEMENT FIRE STATION # 96
1020 DAYTONA AVENUE
HOLLY HILL, FL 32117

THIS DRAWING IS THE PROPERTY OF NEWKIRK ENGINEERING ANY USE OR REPRODUCTION IN WHOLE OR PART IS PROHIBITED WITHOUT THE EXPRESSED WRITTEN CONSENT OF NEWKIRK ENGINEERING COPYRIGHT 2013 ALL RIGHTS RESERVED

THIS ITEM HAS BEEN DIGITALLY SIGNED AND SEALED BY HARRY NEWKIRK, PE # 62971 ON

HARRY NEWKIRK LICENSE NO. 62971 STATE OF FLORIDA PROFESSIONAL ENGINEER

PRINTED COPIES OF THIS DOCUMENT ARE NOT CONSIDERED SIGNED AND SEALED AND THE SIGNATURE MUST BE VERIFIED ON ANY ELECTRONIC COPIES.

PROJECT No:	2022-205
DATE:	MAY 18, 2023
DESIGN BY:	HHN
DRAWN BY:	NWS
CHECKED BY:	HHN
SCALE:	1" = 20'

DRAWING NUMBER

11

Attachment: Exhibit C - Fire Station #96 Bid Set (2023-R-55 : Fire Station Construction)

FDEP DOMESTIC WATER NOTES

1. ALL PIPE, PIPE FITTINGS, PIPE JOINT PACKING AND JOINTING MATERIALS, VALVES, FIRE HYDRANTS, AND METERS INSTALLED UNDER THIS PROJECT WILL CONFORM TO APPLICABLE AMERICAN WATER WORKS ASSOCIATION (AWWA) STANDARDS.

2. ALL PUBLIC WATER SYSTEM COMPONENTS, EXCLUDING FIRE HYDRANTS, THAT WILL BE INSTALLED UNDER THIS PROJECT AND THAT WILL COME INTO CONTACT WITH DRINKING WATER WILL CONFORM TO NSF INTERNATIONAL STANDARD 61.

3. ALL PROPOSED WATER MAINS SHALL BE FLUSHED, DISINFECTED AND BACTERIOLOGICALLY CLEARED FOR SERVICE IN ACCORDANCE WITH AWWA SPECIFICATIONS C-651 AND THE FDEP PROTECTION REQUIREMENTS.

4. POTABLE WATER PIPES SHALL BE HYDROSTATICALLY TESTED FOR PRESSURE AND LEAKAGE IN ACCORDANCE WITH AWWA STANDARD C600 FOR DUCTILE IRON PIPES AND C605 FOR PVC PIPES, RESPECTIVELY.

5. ALL PIPE AND PIPE FITTINGS INSTALLED UNDER THIS PROJECT WILL BE LEAD FREE. ANY SOLDER OR FLUX USED IN THIS PROJECT SHALL CONTAIN NO MORE THAN 0.2 PERCENT LEAD.

6. ALL PIPE AND PIPE FITTINGS INSTALLED UNDER THIS PROJECT WILL BE COLOR CODED OR MARKED IN ACCORDANCE WITH SUBPARAGRAPH 62-555.320(21)(B)3, F.A.C., USING BLUE AS A PREDOMINANT COLOR FOR WATER AND GREEN FOR SEWER. (UNDERGROUND PLASTIC PIPE WILL BE SOLID-WALL BLUE PIPE, WILL HAVE A CO-EXTRUDED BLUE EXTERNAL SKIN, OR WILL BE WHITE OR BLACK PIPE WITH BLUE STRIPES INCORPORATED INTO, OR APPLIED TO, THE PIPE WALL; AND UNDERGROUND METAL OR CONCRETE PIPE WILL HAVE BLUE STRIPES APPLIED TO THE PIPE WALL. PIPE STRIPED DURING MANUFACTURING OF THE PIPE WILL HAVE CONTINUOUS STRIPES THAT RUN PARALLEL TO THE AXIS OF THE PIPE, THAT ARE LOCATED AT NO GREATER THAN 90-DEGREE INTERVALS AROUND THE PIPE, AND THAT WILL REMAIN INTACT DURING AND AFTER INSTALLATION OF THE PIPE. IF TAPE OR PAINT IS USED TO STRIPE PIPE DURING INSTALLATION OF THE PIPE, THE TAPE OR PAINT WILL BE APPLIED IN A CONTINUOUS LINE THAT RUNS PARALLEL TO THE AXIS OF THE PIPE AND THAT IS LOCATED ALONG THE TOP OF THE PIPE; FOR PIPE WITH AN INTERNAL DIAMETER OF 24 INCHES OR GREATER, TAPE OR PAINT WILL BE APPLIED IN CONTINUOUS LINES ALONG EACH SIDE OF THE PIPE AS WELL AS ALONG THE TOP OF THE PIPE. ABOVEGROUND PIPE WILL BE PAINTED BLUE OR WILL BE COLOR CODED OR MARKED LIKE UNDERGROUND PIPE.)

7. POTABLE WATER PIPES MUST BE MANUFACTURED IN ACCORDANCE WITH THE FOLLOWING AWWA SPECIFICATIONS:
   - A. DUCTILE IRON PIPE (3 INCHES TO 54 INCHES) - AWWA C150 AND AWWA C151;
   - B. PVC PIPE
     - (1) AWWA C900/ASTM 1784 (1 INCH TO 12 INCHES) WITH CL200 MINIMUM:
     - (2) AWWA C905 (14 INCHES TO 48 INCHES);

8. ALL FIRE HYDRANTS THAT WILL BE INSTALLED UNDER THIS PROJECT AND THAT WILL HAVE UNPLUGGED, UNDERGROUND DRAINS WILL BE LOCATED AT LEAST THREE FEET FROM ANY EXISTING OR PROPOSED STORM SEWER, STORMWATER FORCE MAIN, PIPELINE CONVEYING RECLAIMED WATER OR VACUUM-TYPE SANITARY SEWER; AT LEAST SIX FEET FROM ANY EXISTING OR PROPOSED GRAVITY- OR PRESSURE-TYPE SANITARY SEWER, WASTEWATER FORCE MAIN, OR PIPELINE CONVEYING RECLAIMED WATER NOT REGULATED UNDER PART III OF CHAPTER 62-10, F.A.C.; AND AT LEAST TEN FEET FROM ANY EXISTING OR PROPOSED "ON-SITE SEWAGE TREATMENT AND DISPOSAL SYSTEM."

9. NEW OR ALTERED WATER MAINS INCLUDED IN THIS PROJECT WILL BE INSTALLED IN ACCORDANCE WITH APPLICABLE AWWA STANDARDS OR IN ACCORDANCE WITH MANUFACTURERS' RECOMMENDED PROCEDURES.

10. A CONTINUOUS AND UNIFORM BEDDING WILL BE PROVIDED IN TRENCHES FOR UNDERGROUND PIPE INSTALLED UNDER THIS PROJECT; BACKFILL MATERIAL WILL BE TAMPED IN LAYERS AROUND UNDERGROUND PIPE INSTALLED UNDER THIS PROJECT AND TO A SUFFICIENT HEIGHT ABOVE THE PIPE TO ADEQUATELY SUPPORT AND PROTECT THE PIPE; AND UNSUITABLY SIZED STONES (AS DESCRIBED IN APPLICABLE AWWA STANDARDS OR MANUFACTURERS' RECOMMENDED INSTALLATION PROCEDURES) FOUND IN TRENCHES WILL BE REMOVED FOR A DEPTH OF AT LEAST SIX INCHES BELOW THE BOTTOM OF UNDERGROUND PIPE INSTALLED UNDER THIS PROJECT.

11. ALL WATER MAIN TEES, BENDS, PLUGS, AND HYDRANTS INSTALLED UNDER THIS PROJECT WILL BE PROVIDED WITH THRUST BLOCKS OR RESTRAINED JOINTS TO PREVENT MOVEMENT.

12. NEW OR ALTERED WATER MAINS THAT ARE INCLUDED IN THIS PROJECT AND THAT WILL BE CONSTRUCTED OF POLYVINYL CHLORIDE PIPE WILL BE PRESSURE AND LEAKAGE TESTED IN ACCORDANCE WITH AWWA STANDARD C603 OR C605, RESPECTIVELY, AND ALL OTHER NEW OR ALTERED WATER MAINS INCLUDED IN THIS PROJECT WILL BE PRESSURE AND LEAKAGE TESTED IN ACCORDANCE WITH AWWA STANDARD C600.

13. NEW OR RELOCATED, UNDERGROUND WATER MAINS INCLUDED IN THIS PROJECT WILL BE LAID TO PROVIDE A HORIZONTAL DISTANCE OF AT LEAST THREE FEET BETWEEN THE OUTSIDE OF THE WATER MAIN AND THE OUTSIDE OF ANY EXISTING OR PROPOSED VACUUM-TYPE SANITARY SEWER, STORM SEWER, STORMWATER FORCE MAIN, OR PIPELINE CONVEYING RECLAIMED WATER REGULATED UNDER PART III OF CHAPTER 62-610, F.A.C.; A HORIZONTAL DISTANCE OF AT LEAST SIX FEET BETWEEN THE OUTSIDE OF THE WATER MAIN AND THE OUTSIDE OF ANY EXISTING OR PROPOSED GRAVITY-TYPE SANITARY SEWER (OR A HORIZONTAL DISTANCE OF AT LEAST THREE FEET BETWEEN THE OUTSIDE OF THE WATER MAIN AND THE OUTSIDE OF ANY EXISTING OR PROPOSED GRAVITY-TYPE SANITARY SEWER IF THE BOTTOM OF THE WATER MAIN WILL BE LAID AT LEAST SIX INCHES ABOVE THE TOP OF THE SEWER); A HORIZONTAL DISTANCE OF AT LEAST SIX FEET BETWEEN THE OUTSIDE OF THE WATER MAIN AND THE OUTSIDE OF ANY EXISTING OR PROPOSED PRESSURE-TYPE SANITARY SEWER, WASTEWATER FORCE MAIN, OR PIPELINE CONVEYING RECLAIMED WATER NOT REGULATED UNDER PART III OF CHAPTER 62-610, F.A.C.; AND A HORIZONTAL DISTANCE OF AT LEAST TEN FEET BETWEEN THE OUTSIDE OF THE WATER MAIN AND ALL PARTS OF ANY EXISTING OR PROPOSED "ON-SITE SEWAGE TREATMENT AND DISPOSAL SYSTEM."

14. NEW OR RELOCATED, UNDERGROUND WATER MAINS THAT ARE INCLUDED IN THIS PROJECT AND THAT WILL CROSS ANY EXISTING OR PROPOSED GRAVITY- OR VACUUM-TYPE SANITARY SEWER OR STORM SEWER WILL BE LAID SO THE OUTSIDE OF THE WATER MAIN IS AT LEAST SIX INCHES ABOVE THE OTHER PIPELINE OR AT LEAST 12 INCHES BELOW THE OTHER PIPELINE; AND NEW OR RELOCATED, UNDERGROUND WATER MAINS THAT ARE INCLUDED IN THIS PROJECT AND THAT WILL CROSS ANY EXISTING OR PROPOSED PRESSURE-TYPE SANITARY SEWER, WASTEWATER OR STORMWATER FORCE MAIN, OR PIPELINE CONVEYING RECLAIMED WATER WILL BE LAID SO THE OUTSIDE OF THE WATER MAIN IS AT LEAST 12 INCHES ABOVE OR BELOW THE OTHER PIPELINE.

15. AT THE UTILITY CROSSINGS DESCRIBED ABOVE, ONE FULL LENGTH OF WATER MAIN PIPE WILL BE CENTERED ABOVE OR BELOW THE OTHER PIPELINE SO THE WATER MAIN JOINTS WILL BE AS FAR AS POSSIBLE FROM THE OTHER PIPELINE OR THE PIPES WILL BE ARRANGED SO THAT ALL WATER MAIN JOINTS ARE AT LEAST THREE FEET FROM ALL JOINTS IN VACUUM-TYPE SANITARY SEWERS, STORM SEWERS, STORMWATER FORCE MAINS, OR PIPELINES CONVEYING RECLAIMED WATER REGULATED UNDER PART III OF CHAPTER 62-610, F.A.C., AND AT LEAST SIX FEET FROM ALL JOINTS IN GRAVITY- OR PRESSURE-TYPE SANITARY SEWERS, WASTEWATER FORCE MAINS, OR PIPELINES CONVEYING RECLAIMED WATER NOT REGULATED UNDER PART III OF CHAPTER 62-610, F.A.C.

16. IF CONNECTION OF THE PROPOSED ACTIVITY TO THE WATER MAIN WILL RESULT IN A DEPRESSURIZATION OF THE EXISTING SYSTEM BELOW 20 POUNDS PER SQUARE INCH, ONE OF THE FOLLOWING MUST OCCUR;
   - A. PRECAUTIONARY BOIL WATER NOTICES MUST BE ISSUED IN CASES OF PLANNED DISTRIBUTION INTERRUPTIONS, WHICH ARE DEEMED AN IMMINENT PUBLIC HEALTH THREAT BY THE DEP CENTRAL DISTRICT OR WILL AFFECT THE BACTERIOLOGICAL QUALITY OF THE DRINKING WATER UNLESS THE PUBLIC WATER SYSTEM CAN DEMONSTRATE, BY SOUND ENGINEERING JUDGMENT, THAT THE INTEGRITY OF THE WATER SYSTEM HAS BEEN MAINTAINED; OR
   - B. IN CASE OF BRIEF INTERRUPTION IN SERVICE, ADVISORIES (NOT BOIL WATER NOTICES) SHOULD BE ISSUED IF TEMPORARY CHANGES IN WATER QUALITY ARE EXPECTED TO OCCUR AND NOT DEEMED AN IMMINENT PUBLIC HEALTH RISK.

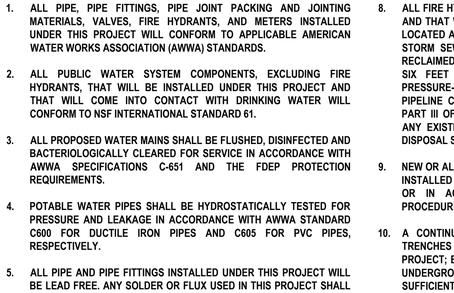

TYPICAL FIRE HYDRANT CLEARANCE REQUIREMENT

NOT TO SCALE

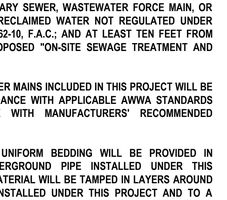

TOP OF FLANGE REFERENCE POINT DETAIL

NOT TO SCALE

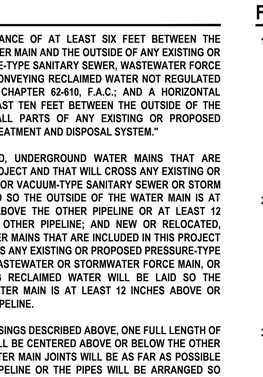

BACTERIOLOGICAL SAMPLE POINT DETAIL

NOT TO SCALE

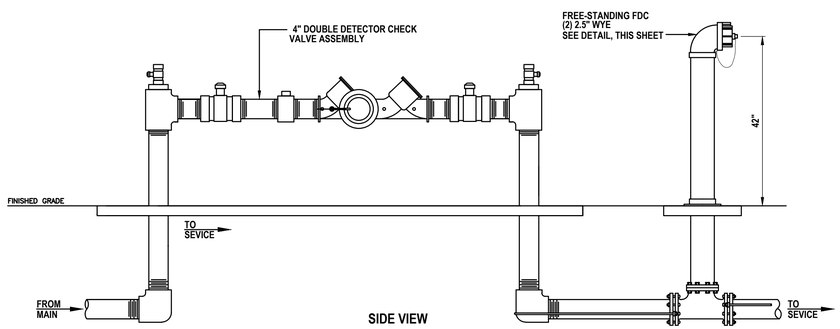

DDC TO FDC DETAIL

NOT TO SCALE

FDEP WASTEWATER NOTES

1. APPROPRIATE DEFLECTION TEST ARE SPECIFIED FOR ALL FLEXIBLE PIPE. TESTING IS REQUIRED AFTER THE FINAL BACKFILL HAS BEEN IN PLACE AT LEAST 30 DAYS TO PERMIT STABILIZATION OF THE SOIL-PIPE SYSTEM. TESTING REQUIREMENTS SPECIFY: 1) NO PIPE SHALL EXCEED A DEFLECTION OF 5%; 2) USING RIGID BALL OR MANDREL FOR THE DEFLECTION TEST WITH A DIAMETER NOT LESS THAN 95% OF THE BASE INSIDE DIAMETER OR AVERAGE INSIDE DIAMETER OF THE PIPE, DEPENDING ON WHICH IS SPECIFIED IN THE ASTM SPECIFICATIONS, INCLUDING THE APPENDIX, TO WHICH THE PIPE IS MANUFACTURE; AND 3) PERFORMING THE TEST WITHOUT MECHANICAL PULLING DEVICES.

2. LEAKAGE TEST ARE SPECIFIED REQUIRING THAT: 1) THE LEAKAGE EXFILTRATION OR INFILTRATION DOES NOT EXCEED 200 GALLONS PER INCH OF PIPE DIAMETER PER MILE PER DAY FOR ANY SECTION OF THE SYSTEM; 2) EXFILTRATION OR INFILTRATION TEST BE PERFORMED WITH A MINIMUM POSITIVE HEAD OF 2 FEET; AND 3) AIR TEST, AS A MINIMUM, CONFORM TO THE TEST PROCEDURE DESCRIBED IN ASTM C-828 FOR CLAY PIPE, ASTM C 924 FOR CONCRETE PIPE, ASTM F-1417 FOR PLASTIC PIPE, AND OTHER MATERIAL APPROPRIATE TEST PROCEDURES.

3. MANHOLE INSPECTION AND TESTING FOR WATERTIGHTNESS OR DAMAGE PRIOR TO PLACING INTO SERVICE ARE REQUIRED. AIR TESTING SPECIFIED FOR CONCRETE SEWER MANHOLES, SHALL CONFORM TO THE TEST PROCEDURES DESCRIBED IN ASTM C-1244.

4. SUITABLE COUPLINGS COMPLYING WITH ASTM SPECIFICATIONS ARE REQUIRED FOR JOINING DISSIMILAR MATERIALS.

5. CONCRETE MANHOLES SHALL HAVE THE FOLLOWING: 1) MANHOLE LIFT HOLES AND GRADE ADJUSTMENT RINGS SEALED WITH NON-SHRINK MORTAR OR OTHER APPROPRIATE MATERIAL; 2) INLET AND OUTLET PIPES BE JOINED TO THE MANHOLE WITH A GASKETED FLEXIBLE WATERTIGHT CONNECTION OR ANOTHER WATERTIGHT CONNECTION ARRANGEMENT THAT ALLOWS DIFFERENTIAL SETTLEMENT OF THE PIPE AND MANHOLE WALL; 3) WATERTIGHT MANHOLE COVERS BE USED WHEREVER THE TOPS MAY BE FLOODED BY STREET RUNOFF OR HIGH WATER.

LOCATION OF PUBLIC WATER SYSTEM MAINS IN ACCORDANCE WITH F.A.C. RULE 62-555.314

OTHER PIPE	HORIZONTAL SEPARATION	CROSSINGS (1)	JOINT SPACING AT CROSSINGS (FULL JOINT CENTERED)
STORM SEWER, STORMWATER FORCE MAIN, RECLAIMED WATER (2)	WATER MAIN 3 FT MINIMUM	WATER MAIN 12 INCHES IS THE MINIMUM EXCEPT FOR STORM SEWER, THEN 6 INCHES IS THE MINIMUM AND 12 INCHES IS PREFERRED	ALTERNATE 3 FT MINIMUM WATER MAIN
VACUUM SANITARY SEWER	WATER MAIN 10 FT PREFERRED 3 FT MINIMUM	WATER MAIN 12 INCHES PREFERRED 6 INCHES MINIMUM	ALTERNATE 3 FT MINIMUM WATER MAIN
GRAVITY OR PRESSURE SANITARY SEWER, SANITARY SEWER FORCE MAIN, RECLAIMED WATER (4)	WATER MAIN 10 FT PREFERRED 6 FT MINIMUM (3)	WATER MAIN 12 INCHES IS THE MINIMUM EXCEPT FOR STORM SEWER, THEN 6 INCHES IS THE MINIMUM AND 12 INCHES IS PREFERRED	ALTERNATE 6 FT MINIMUM WATER MAIN
ON-SITE SEWAGE TREATMENT AND DISPOSAL SYSTEM	10 FT MINIMUM (3)	———	———

(1) WATER MAIN SHOULD CROSS ABOVE OTHER PIPE. WHEN WATER MAIN MUST BE BELOW OTHER PIPE, THE MINIMUM SEPARATION IS 12 INCHES.
(2) RECLAIMED WATER REGULATED UNDER PART III OF CHAPTER 62-610, F.A.C.
(3) 3 FT FOR GRAVITY SANITARY SEWER WHERE THE BOTTOM OF THE WATER MAIN IS LAID AT LEAST 6 INCHES ABOVE THE TOP OF THE GRAVITY SANITARY SEWER.
(4) RECLAIMED WATER NOT REGULATED UNDER PART III OF CHAPTER 62-610, F.A.C.

TABLE 1: CLASSES OF EMBEDMENT AND BACKFILL MATERIALS

ASTM D 2321 MATERIAL CLASS	ASTM D 2487 USCS SOIL GROUP	MATERIAL TYPE	% PASSING			ATTERBERG LIMITS	
			1 1/2 IN.	NO. 4	NO. 200	LL	PI
IA	NONE	MANUFACTURED OPEN GRADED AGGREGATES	100%	≤10%	<5%	NON PLASTIC	
IB	NONE	MANUFACTURED DENSE GRADED AGGREGATES	100%	≤50%	<5%	NON PLASTIC	
II	GW	COARSE-GRAINED SOILS, CLEAN	100%	<50% OF "COARSE FRACTION"	<5%	NON PLASTIC	
	GP						
	SW			>50% OF "COARSE FRACTION"			
	SP						
III	GM	COARSE-GRAINED SOILS W/ FINES	100%	<50% OF "COARSE FRACTION"	12% TO 50%		<4 OR <"A" LINE
	GC						<7 OR >"A" LINE
	SM			>50% OF "COARSE FRACTION"			>4 OR <"A" LINE
	SC						>7 OR >"A" LINE
IV-A	ML	FINE-GRAINED SOILS	100%	100%	>50%	<50	<4 OR <"A" LINE
	CL						>7 OR >"A" LINE

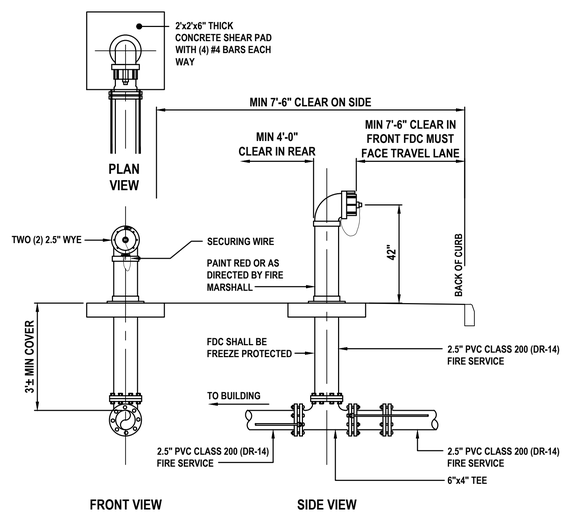

FDC (FREE STANDING) DETAIL

NOT TO SCALE

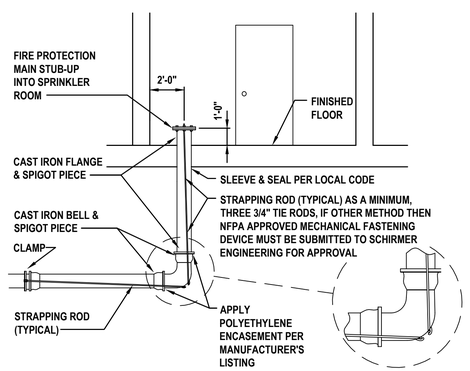

UNDERGROUND RESTRAINT DETAIL

NOT TO SCALE

REVISIONS

DATE	DESCRIPTION
4/11/23	CITY COMMENTS
5/17/23	ARCHITECT COMMENTS
5/18/23	BIDDING

1230 North US1, Suite 3
Ormond Beach, Florida 32174
Phone (386) 672-7784
www.Newkirk-Engineering.com
C.A. # 30209
L.C. # 26000584
© 2013
Civil Engineering
Transportation, CEI &
Landscape Architecture
NEWKIRK ENGINEERING INC.

UTILITY DETAILS AND NOTES
REPLACEMENT FIRE STATION # 96
1020 DAYTONA AVENUE
HOLLY HILL, FL 32117

THIS DRAWING IS THE PROPERTY OF NEWKIRK ENGINEERING ANY USE OR REPRODUCTION IN WHOLE OR PART IS PROHIBITED WITHOUT THE EXPRESSED WRITTEN CONSENT OF NEWKIRK ENGINEERING COPYRIGHT 2013 ALL RIGHTS RESERVED

THIS ITEM HAS BEEN DIGITALLY SIGNED AND SEALED BY HARRY NEWKIRK, PE # 62971 ON

HARRY NEWKIRK LICENSE NO. 62971 STATE OF FLORIDA PROFESSIONAL ENGINEER

PRINTED COPIES OF THIS DOCUMENT ARE NOT CONSIDERED SIGNED AND SEALED AND THE SIGNATURE MUST BE VERIFIED ON ANY ELECTRONIC COPIES.

PROJECT No:	2022-205
DATE:	MAY 18, 2023
DESIGN BY:	HHN
DRAWN BY:	NWS
CHECKED BY:	HHN
SCALE:	AS SHOWN

DRAWING NUMBER

12

Attachment: Exhibit C - Fire Station #96 Bid Set (2023-R-55 : Fire Station Construction)

REQUIREMENTS FOR AS-BUILT DRAWINGS (1 OF 2)

IN ORDER TO ENSURE THAT NEW SUBDIVISIONS AND SITE PLANS ARE CONSTRUCTED SUBSTANTIALLY IN ACCORDANCE WITH CITY REGULATIONS AND THE APPROVED DRAWINGS, THE FOLLOWING INFORMATION IS REQUIRED ON ALL SUBDIVISION AS-BUILT DRAWINGS.

1. INDIVIDUAL PLAN AND PROFILE SHEETS FOR ALL ROADS AND SANITARY SEWER LINES, SHOWING MANHOLES, INLETS, AND PIPE CROSSINGS. PLAN AND PROFILE SHEETS SHALL SHOW SANITARY LINES AND ALL OTHER BURIED UTILITIES THAT CROSS SEWER LINES, AND ANY THAT PARALLEL AND ARE WITHIN TEN FEET OF SANITARY SEWER LINES. PLAN VIEWS SHALL BE DRAWN AT A SCALE OF ONE (1) INCH EQUAL TO FORTY (40) FEET HORIZONTAL. PROFILES SHALL BE DRAWN AT ONE (1) INCH EQUAL TO FOUR (4) FEET VERTICAL.
2. PAVEMENT AND CURB WIDTHS SHALL BE VERIFIED AND DIMENSIONED FOR EACH STREET AT EACH BLOCK. (FOR SUBDIVISIONS) AND AS APPROPRIATE TO CONFIRM PAVING LIMITS (ON SITE PLANS).
3. ALL RADII AT INTERSECTIONS SHALL BE VERIFIED AND DIMENSIONED. THIS INFORMATION IS TO BE CLEARLY INDICATED ON THE AS-BUILT.
4. ROADWAY ELEVATIONS SHALL BE RECORDED AT ALL GRADE CHANGES, 100' INTERVALS LONG ROADWAY, AND OTHER INTERVALS AS NEEDED ALONG ALL STREETS. STREET CENTERLINE AND CURB INVERT ELEVATIONS SHALL BE RECORDED AS NOTED. THE AS-BUILT CENTERLINE PROFILE OF ALL STREETS SHALL ALSO BE SHOWN ON THE PLAN AND PROFILE SO IT MAY BE COMPARED TO THE DESIGN PROFILE GRADE LINES. IN THE EVENT THAT THE AS-BUILT CENTERLINE LONGITUDINAL GRADE DOES NOT MEET THE CITY MINIMUM STANDARDS, ADDITIONAL LONGITUDINAL GRADES OF THE ADJACENT CURBING AND SIMILAR ROADWAY CROSS-SECTION SURVEYS TO VERIFY THE CORRECT CROSS SLOPE, SHALL BE REQUIRED TO VERIFY THAT THE SYSTEM WILL FUNCTION AS ORIGINALLY DESIGNED.
5. STORM DRAINAGE STRUCTURES SHALL BE LOCATED AND / OR DIMENSIONED FROM CENTERLINES OR LOT LINES AS APPROPRIATE.
6. STORM DRAINAGE PIPE INVERT AND INLET ELEVATIONS SHALL BE RECORDED AND CLEARLY DENOTED AS AS-BUILT INFORMATION. DESIGN ELEVATIONS SHALL BE CROSSED OUT AND AS-BUILT INFORMATION WRITTEN NEXT TO IT.
7. STORM DRAINAGE PIPE MATERIAL, LENGTH, AND SIZE SHALL BE MEASURED AND / OR VERIFIED. THIS INFORMATION IS TO BE CLEARLY INDICATED AS BEING AS-BUILT INFORMATION.
8. ALL APPLICABLE TOPOGRAPHIC INFORMATION PERTINENT TO ON-SITE DRAINAGE SYSTEM, SUCH AS DITCHES, SWALES, LAKES, CANALS, ETC. THAT ARE DEEMED NECESSARY BY THE CITY TO VERIFY THE FUNCTIONAL PERFORMANCE OF THE STORMWATER SYSTEM, SHALL BE NOTED. NORMAL TV RECORDING ELEVATIONS EVERY 100 FEET AT THE TOP OF BANK AND TOE OF SLOPE WILL BE REQUIRED. MEASUREMENTS SHALL BE TAKEN AND RECORDED IN ORDER TO ACCURATELY TIE DOWN THESE FEATURES TO THE ROADWAY CENTERLINES AND TO PLAT LINES WHENEVER POSSIBLE, CONTOUR LINES SHALL BE UTILIZED TO GRAPHICALLY DESCRIBE THESE TOPOGRAPHIC FEATURES.
9. RETENTION AREAS SHALL HAVE THEIR TOP-OF BANK AND BOTTOM ELEVATIONS RECORDED. ACTUAL MEASUREMENTS SHALL BE TAKEN AND DIMENSIONS RECORDED OF THE SIZE OF ALL RETENTION AREAS. MEASUREMENTS SHALL BE DONE FROM TOP-OF-BANK WITH SIDE SLOPES INDICATED. SEPARATE CALCULATIONS SHALL BE SUBMITTED TO INDICATE REQUIRED AND PROVIDED RETENTION VOLUMES.
10. ACTUAL MATERIALS USED AND ELEVATIONS AND DIMENSIONS OF OVERFLOW WEIR STRUCTURES AND SKIMMERS SHALL BE NOTED ON THE AS-BUILT.
11. STORM DRAINAGE SWALE CENTERLINES SHALL BE LOCATED AND ELEVATIONS OF FLOW LINE AND TOP OF BANK SHALL BE RECORDED EVERY 100 FEET. SIDE SLOPES SHALL ALSO BE INDICATED.
12. SANITARY SEWER MANHOLES SHALL BE VERIFIED AND DIMENSIONED FROM STREET CENTERLINES OR LOT LINES AS APPROPRIATE. ALL RIM AND INVERT ELEVATIONS SHALL BE VERIFIED AND RECORDED. THIS INFORMATION SHALL BE CLEARLY INDICATED AS BEING AS-BUILT INFORMATION. DESIGN ELEVATIONS SHALL BE CROSSED OUT AND AS-BUILT INFORMATION WRITTEN NEXT TO IT.

HOLLY HILL FLORIDA	CITY OF HOLLY HILL, FLORIDA STANDARD CONSTRUCTION DETAILS REQUIREMENTS FOR AS-BUILT DRAWINGS	DATE 02/2020 DETAIL NUMBER GD-1.1

REQUIREMENTS FOR AS-BUILT DRAWINGS (2 OF 2)

13. FOR SUBDIVISIONS, PROPOSED DESIGN FINISHED FLOOR ELEVATIONS SHALL APPEAR ON ALL SUBDIVISION LOTS ON THE APPROPRIATE PLAN AND PROFILE SHEET AS WELL AS ON THE MASTER DRAINAGE PLAN. SANITARY SEWER LINE LENGTHS, SIZES, MATERIAL, ETC., SHALL BE VERIFIED AND RECORDED. THIS INFORMATION IS TO BE CLEARLY INDICATED AS BEING AS-BUILT INFORMATION.
14. SEWER LATERALS SHALL BE VERIFIED AND RECORDED AT THEIR CLEAN-OUT LOCATIONS. STATIONING AND OFFSET DISTANCES SHALL BE MEASURED FROM DOWNSTREAM MANHOLES TOWARDS UPSTREAM MANHOLES.
15. LIFT STATIONS AND FORCE MAINS SHALL BE VERIFIED AND DIMENSIONED FROM STREET CENTERLINES OR LOT LINES AS APPROPRIATE. FORCE MAIN DEPTH AND LOCATION INCLUDING VALVES WILL BE PROVIDED AND TIED TO PERMANENT ABOVE GRADE FEATURES. DIMENSIONAL AND ELEVATION INFORMATION INDICATED ON THE APPROVED PLAN SHALL BE VERIFIED AND RECORDED. THIS INFORMATION SHALL BE CLEARLY INDICATED AS BEING AS-BUILT INFORMATION. BURIED ELECTRICAL SERVICE LINE SHALL BE CLEARLY DIMENSIONED, LOCATED, AND LABELED.
16. CURB CUTS OR METAL TABS, USED TO MARK SEWER LATERALS, WATER SERVICES AND WATER VALVES, SHALL BE VERIFIED FOR PRESENCE AND ACCURACY OF LOCATION.
17. POTABLE AND RECLAIMED WATER MAIN LINES SHALL BE DIMENSIONED OFF THE BACK OF CURB, OR EDGE OF PAVEMENT IF NO CURB IS PRESENT. WATER MAIN LINE MATERIAL SIZE, LENGTH AND DEPTH PLACED SHALL ALSO BE NOTED. LOCATIONS OF VALVES, TEES AND CROSSES SHALL BE TIED TO (3) THREE PERMANENT ABOVE GRADE FEATURES. THIS INFORMATION SHALL BE CLEARLY INDICATED AS BEING AS-BUILT INFORMATION.
18. POTABLE AND RECLAIMED WATER VALVES, TEES, BENDS, ALL SERVICES, AND FIRE HYDRANTS SHALL BE LOCATED BY TYING THEM TO SANITARY SEWER MANHOLES. SIMILARLY, FORCE MAIN VALVES, TEES, AND BENDS SHALL BE LOCATED IN THE SAME MANNER, STATIONING AND OFFSET DISTANCES SHALL BE MEASURED FROM DOWNSTREAM MANHOLES TO UPSTREAM MANHOLES.
19. FOR PERPENDICULAR CROSSINGS OF STORMWATER, SANITARY SEWER, POTABLE WATER, OR RECLAIMED WATER, THE AS-BUILT PLANS SHALL CLEARLY INDICATE WHICH UTILITIES ARE LOCATED OVER OR UNDER OTHER UTILITIES, AS NECESSARY.
20. ANY SPECIAL FEATURES SUCH AS, CONCRETE FLUMES, LAKE BANKS, WALLS, FENCING, ETC., WHICH WERE A PART OF THE APPROVED CONSTRUCTION DRAWINGS SHOULD ALSO BE LOCATED AND DIMENSIONED.
21. IF AN APPROVED SUBDIVISION PLAT OR SITE PLAN SHOWS A CONSERVATION EASEMENT, THE PROJECT SURVEYOR SHALL PROVIDE THE EXACT LOCATION OF THE SPECIMEN TREE(S) FROM THE RIGHT-OF-WAY OR PROPERLY LINES AND PROPOSED EASEMENT BOUNDARIES ON AS-BUILT DRAWING. THE AS-BUILT LOCATION OF THESE TREES WILL HELP VERIFY THE SUFFICIENCY OF THE CONSERVATION EASEMENT PRIOR TO PLAT RECORDING OR CERTIFICATE OF OCCUPANCY.
22. WHEN STORMWATER, POTABLE WATER, RECLAIMED WATER, OR SANITARY SEWER IMPROVEMENTS ARE LOCATED WITHIN AN EASEMENT, THE AS-BUILT DRAWING SHALL ACCURATELY DEPICT THE LOCATION OF THE EASEMENT ITSELF AS WELL AS THE EXACT LOCATION OF THE IMPROVEMENTS WITHIN THE EASEMENT. THIS IS REQUIRED IN ORDER TO VERIFY THAT THE IMPROVEMENTS HAVE BEEN PROPERLY LOCATED AND TO ENSURE THAT FUTURE SUBSURFACE EXCAVATION TO PERFORM REMEDIAL REPAIR CAN BE ACCOMPLISHED WITHOUT DISTURBANCE BEYOND THE EASEMENT. SUCH DOCUMENTATION AND THE ASSOCIATED PROPOSED EASEMENT DOCUMENT WITH LEGAL DESCRIPTION SHALL BE SUBMITTED FOR CITY REVIEW AND APPROVAL PRIOR TO RECORDING OF SAID EASEMENT. UPON CITY APPROVAL, THE EASEMENT SHALL BE RECORDED VIA A SEPARATE LEGAL INSTRUMENT AND SHALL NOT BE INCLUDED AS PART OF HOMEOWNER COVENANTS & RESTRICTIONS.

NOTE: REFERENCES TO WATER SHALL MEAN BOTH POTABLE AND RECLAIMED WATER.

HOLLY HILL FLORIDA	CITY OF HOLLY HILL, FLORIDA STANDARD CONSTRUCTION DETAILS REQUIREMENTS FOR AS-BUILT DRAWINGS	DATE 02/2020 DETAIL NUMBER GD-1.2

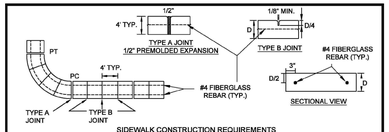

SIDEWALK CONSTRUCTION REQUIREMENTS

1. ALL CONCRETE SIDEWALKS & BIKEPATHS IN PUBLIC RIGHT-OF-WAY, PRIVATE RIGHT-OF-WAY, AND ON NON-RESIDENTIAL SITES SHALL CONTAIN FIBERGLASS REINFORCEMENT EXCEPT REPAIRS TO NON-REINFORCED EXISTING SIDEWALKS. FIBERGLASS REINFORCEMENT SHALL NOT BE REQUIRED ON PRIVATE RESIDENTIAL SIDEWALKS.
2. SIDEWALKS, BIKE PATHS, RAMPS, AND DRIVEWAY APRONS SHALL BE CONSTRUCTED OF PLAIN PORTLAND CEMENT CONCRETE WITH FIBERGLASS REINFORCEMENT, HAVING A MAXIMUM SLUMP OF 3 INCHES, A MINIMUM DEVELOPED COMPRESSIVE STRENGTH OF 3000 P.S.I. IN 28 DAYS, AND A MINIMUM UNIFORM THICKNESS OF 4 INCHES WHERE INTENDED SOLELY FOR PEDESTRIAN TRAFFIC, AND 6 INCHES THICK WHERE MOTOR VEHICLES ARE LIKELY TO CROSS.
3. 2 - #4 CONTINUOUS FIBERGLASS BARS (6" OVERLAP REQUIRED) SHALL BE INSTALLED LONGITUDINALLY, 3" FROM THE EDGE OF ALL BIKE PATHS AND SIDEWALKS, TO CONTROL DIFFERENTIAL MOVEMENT AT JOINTS.
4. SIDEWALKS AND BIKE PATHS SHALL BE PLACED PARALLEL TO, AND ONE FOOT WITHIN THE RIGHT-OF-WAY LINE EXCEPT THAT THE CITY MAY APPROVE DEVIATIONS TO SAVE SPECIMEN TREES PROVIDED THAT THE SIDEWALK REMAINS WITHIN THE RIGHT-OF-WAY OR AN APPROVED SIDEWALK EASEMENT ABUTTING THE RIGHT OF WAY. SIDEWALKS AND BIKE PATHS SHOULD BE LOCATED AT LEAST 4 FEET FROM THE EDGE OF THE STREET PAVEMENT UNLESS OTHERWISE APPROVED BY THE CITY.
5. THE TOP OF THE CONCRETE SHALL BE AT AN ELEVATION NO LOWER THAN THE CROWN OF THE ADJACENT ROADWAY AND NO HIGHER THAN 6 INCHES ABOVE THE CROWN UNLESS APPROVED BY THE CITY TO MAKE A MORE NATURAL TRANSITION WITH THE ADJACENT LAND.
6. ISOLATION JOINTS (TYPE A JOINTS) SHALL BE PROVIDED BETWEEN EXISTING SLABS OR STRUCTURES AND FRESH CONCRETE, TO SEPARATE PEDESTRIAN SECTIONS FROM SECTIONS WHICH WILL ENCOUNTER VEHICLE TRAFFIC, TO SEPARATE FRESH PLACEMENT FROM CONCRETE WHICH HAS SET FOR MORE THAN 60 MINUTES, AND NO FARTHER APART THAN 100 FEET IN SIDEWALKS AND BIKE PATHS. JOINT MATERIAL SHALL BE PREFORMED JOINT FILLER MEETING FDOT SPECIFICATIONS (LATEST EDITION).
7. CONTROL JOINTS (TYPE B JOINTS) SHALL BE TOOLED INTO THE FRESH CONCRETE TO A DEPTH EQUAL TO 1/4 THE SLAB THICKNESS AND SPACED APART A DISTANCE EQUAL TO THE WIDTH OF THE SLAB OR 4 FEET WHICHEVER IS GREATEST.
8. THE SLAB SURFACE SHALL BE BROOM FINISHED TO BE SLIP RESISTANT, AND SHALL MATCH AS CLOSELY AS POSSIBLE THE FINISH OF EXISTING ADJACENT SLABS AND ALL EDGES SHALL BE TOOLED TO ELIMINATE SHARP CORNERS.
9. THE BEARING SUBSURFACE SHALL HAVE ALL ORGANIC, LOOSE, AND DELETERIOUS MATTER REMOVED, AND THE FORMS CLEAN SO THAT THE SIDEWALK WILL BE SMOOTH, SOUND, AND SOLID. ANY FILL MATERIAL SHALL BE COMPACTED TO A MINIMUM PROCTOR FIELD DENSITY OF 98 PERCENT.
10. ALL CONCRETE WORK IN THE RIGHT-OF-WAY SHALL BE INSPECTED BY THE CITY AFTER THE SUBSOIL IS PREPARED AND THE FORMS ARE SET, BUT BEFORE THE CONCRETE PLACEMENT BEGINS.
11. THE CONTRACTOR SHALL BE RESPONSIBLE FOR PROTECTING THE FINISHED SLAB FROM ALL DAMAGE AND VANDALISM UNTIL THE CITY ACCEPTS OR APPROVES THE SLAB, AFTER WHICH TIME THE OWNER OF THE ABUTTING LAND SHALL BE RESPONSIBLE FOR THE SLAB IN ACCORDANCE WITH THE CITY CODE. ANY SLAB SECTION DAMAGED OR VANDALIZED PRIOR TO ACCEPTANCE OR APPROVAL SHALL BE CUT OUT BETWEEN JOINTS AND REPLACED. REPAIRS ARE NOT ACCEPTABLE.
12. SIDEWALKS LOCATED WITHIN THE RIGHT-OF-WAY SHALL NOT BE TINTED, STAINED, COLORED, OR COATED.
13. ALL FORMS SHALL BE REMOVED PRIOR TO ACCEPTANCE OR APPROVAL AND THE DISTURBED GROUND SHALL BE BACKFILLED, REGRADED, AND SODDED SO THAT THE WEAR SURFACE OF THE CONCRETE IS REASONABLY FLUSH WITH THE ADJACENT GRADE.

HOLLY HILL FLORIDA	CITY OF HOLLY HILL, FLORIDA STANDARD CONSTRUCTION DETAILS SIDEWALK CONSTRUCTION REQUIREMENTS	DATE 02/2020 DETAIL NUMBER GD-3

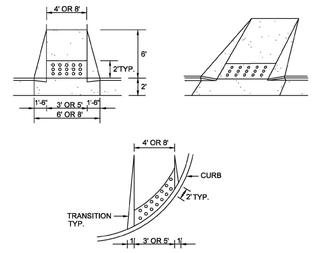

NOTES:

1. RAMP LOCATIONS ARE TO BE COORDINATED WITH AND IN CONFORMANCE WITH CROSSWALK MARKING DETAILS SHOWN IN THE PLANS.
2. CURBED RAMPS SHALL HAVE FLARED SIDES WITH A MAXIMUM SLOPE OF 12:1.
3. RAMPS SHALL HAVE A DETECTABLE WARNING SURFACE AS SHOWN.
4. RAMPS ARE TO BE CONSTRUCTED AT ALL LOCATIONS SHOWN IN THE PLANS EVEN WHEN A SIDEWALK IS NOT CONSTRUCTED CONCURRENTLY.
5. NO CURB TRANSITION IS NEEDED FOR MIAMI CURBS.
6. ALL RAMPS SHALL BE CONSTRUCTED IN ACCORDANCE WITH FDOT STANDARD PLANS (LATEST EDITION) AND HANDICAPPED ACCESSIBILITY REQUIREMENTS IN ACCORDANCE WITH THE AMERICAN DISABILITIES ACT.

HOLLY HILL FLORIDA	CITY OF HOLLY HILL, FLORIDA STANDARD CONSTRUCTION DETAILS SIDEWALK AND BIKE PATH RAMP	DATE 02/2020 DETAIL NUMBER GD-4

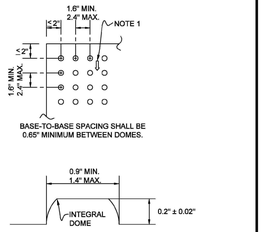

NOTE:

1. ON RAMPS THAT ARE PERPENDICULAR WITH THE CURB LINE, THE DOME PATTERN SHALL BE IN-LINE WITH THE DIRECTION OF TRAVEL. ON RAMPS INTERSECTING CURBS ON A RADIUS, THE DOME PATTERN SHALL BE IN-LINE WITH THE DIRECTION OF TRAVEL TO THE EXTENT PRACTICAL.

HOLLY HILL FLORIDA	CITY OF HOLLY HILL, FLORIDA STANDARD CONSTRUCTION DETAILS SIDEWALK AND BIKEPATH RAMP	DATE 02/2020 DETAIL NUMBER GD-5

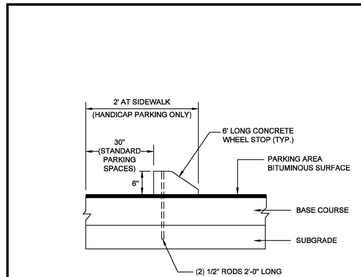

NOTE:

1. CENTER WHEEL STOP IN EACH STALL.

HOLLY HILL FLORIDA	CITY OF HOLLY HILL, FLORIDA STANDARD CONSTRUCTION DETAILS CONCRETE WHEEL STOP	DATE 02/2020 DETAIL NUMBER GD-8

HANDICAP ACCESSIBLE PARKING SPACES SHALL BE PROVIDED IN ACCORDANCE WITH CURRENT FLORIDA STATUTES, INCLUDING THE FOLLOWING DETAILS:

1. ANY COMMERCIAL REAL ESTATE PROPERTY OR RESIDENTIAL MODEL CENTERS OWNER OFFERING PARKING FOR THE GENERAL PUBLIC SHALL PROVIDE SPECIALLY DESIGNED AND MARKED MOTOR VEHICLE PARKING SPACES FOR THE EXCLUSIVE USE OF PHYSICALLY DISABLED PERSONS WHO HAVE BEEN ISSUED PARKING PERMITS PURSUANT TO STATE LAW.
2. DIAGONAL OR PERPENDICULAR PARKING SPACES SHALL BE A MINIMUM OF 12 FEET WIDE (SEE FIGURE 1).
3. PARALLEL PARKING SPACES SHALL BE LOCATED EITHER AT THE BEGINNING OR END OF A BLOCK OR ADJACENT TO ALLEY ENTRANCES (SEE FIGURE 2). CURBS ADJACENT TO SUCH SPACES SHALL BE OF A HEIGHT WHICH WILL NOT INTERFERE WITH THE OPENING AND CLOSING OF MOTOR VEHICLE DOORS.
4. EACH SUCH PARKING SPACE SHALL BE CONSPICUOUSLY OUTLINED IN BLUE PAINT AND SHALL BE POSTED AND MAINTAINED WITH A PERMANENT, ABOVE-GRADE SIGN BEARING THE INTERNATIONAL SYMBOL OF ACCESSIBILITY AND THE CAPTION PARKING BY DISABLED PERMIT ONLY, AND AN ADDITIONAL SIGN STATING THE PENALTY FOR ILLEGAL USE OF THE SPACE (SEE FIGURE 2). SUCH SIGNS SHALL NOT BE OBSCURED BY A VEHICLE PARKED IN THE SPACE. ALL HANDICAP ACCESSIBLE PARKING MUST BE SIGNED AND MARKED IN ACCORDANCE WITH THE STANDARDS ADOPTED BY THE FLORIDA DEPARTMENT OF TRANSPORTATION.
5. ALL SPACES SHALL HAVE A SIXTY INCH (60") WIDE ADJACENT ACCESS AISLE (SEE FIGURE 2). PARKING ACCESS AISLES SHALL BE PART OF THE ACCESSIBLE ROUTE TO THE BUILDING OR FACILITY ENTRANCE. TWO ACCESSIBLE PARKING SPACES MAY SHARE A COMMON ACCESS AISLE. PARKED VEHICLE OVERHANGS SHALL NOT REDUCE THE CLEAR WIDTH OF AN ACCESSIBLE CIRCULATION ROUTE.
6. ALL SPACES SHALL HAVE AN ACCESSIBLE CURB-RAMP OR CURB-CUT TO ALLOW ACCESS TO THE BUILDING SERVED. IT SHALL BE LOCATED SO THAT USERS WILL NOT BE COMPELLED TO WHEEL BEHIND PARKED VEHICLES.
7. THE MINIMUM NUMBER OF SUCH PARKING SPACES SHALL COMPLY WITH THE FOLLOWING TABLE:

TOTAL PARKING IN LOT	REQUIRED NUMBER OF ACCESSIBLE SPACES
UP TO 25	1
26 TO 50	2
51 TO 75	3
76 TO 100	4
101 TO 150	5
151 TO 200	6
201 TO 300	7
301 TO 400	8
401 TO 500	9
501 TO 1000	2% OF TOTAL OVER
1000	20 PLUS 1 FOR EACH 100 OVER 1000

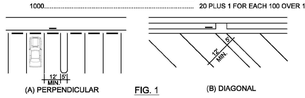

FIG. 1

HOLLY HILL FLORIDA	CITY OF HOLLY HILL, FLORIDA STANDARD CONSTRUCTION DETAILS HANDICAP ACCESSIBLE PARKING SPACES	DATE 02/2020 DETAIL NUMBER GD-10

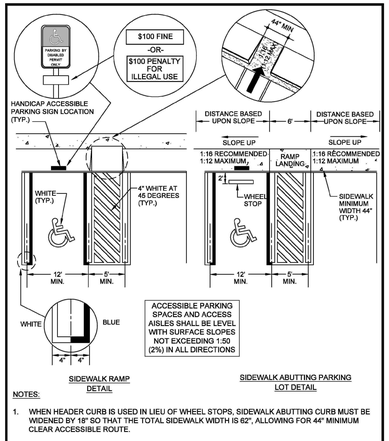

NOTES:

1. WHEN HEADER CURB IS USED IN LIEU OF WHEEL STOPS, SIDEWALK ABUTTING CURB MUST BE WIDENED BY 18" SO THAT THE TOTAL SIDEWALK WIDTH IS 62", ALLOWING FOR 44" MINIMUM CLEAR ACCESSIBLE ROUTE.
2. FOR COMPLETE DETAIL OF HANDICAPPED SIGN, REFER TO DETAIL GD-12.

HOLLY HILL FLORIDA	CITY OF HOLLY HILL, FLORIDA STANDARD CONSTRUCTION DETAILS HANDICAP ACCESSIBLE PARKING SPACES	DATE 02/2020 DETAIL NUMBER GD-11

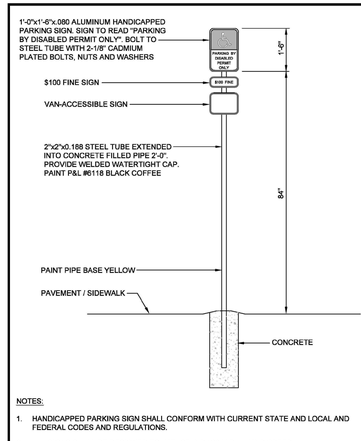

NOTES:

1. HANDICAPPED PARKING SIGN SHALL CONFORM WITH CURRENT STATE AND LOCAL AND FEDERAL CODES AND REGULATIONS.
2. ALL SIGNS SHALL BE DESIGNED TO WITHSTAND 120 M.P.H. WIND SPEED.

HOLLY HILL FLORIDA	CITY OF HOLLY HILL, FLORIDA STANDARD CONSTRUCTION DETAILS HANDICAP PARKING SIGN	DATE 02/2020 DETAIL NUMBER GD-12

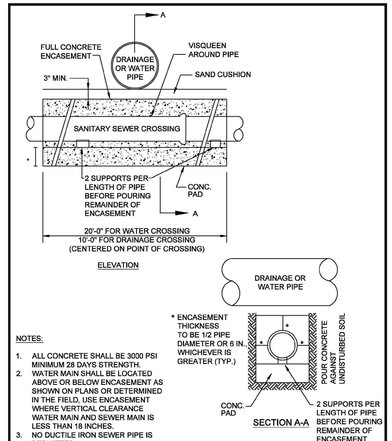

NOTES:

1. ALL CONCRETE SHALL BE 3000 PSI MINIMUM 28 DAYS STRENGTH.
2. WATER MAIN SHALL BE LOCATED ABOVE OR BELOW ENCASEMENT AS SHOWN ON PLANS OR DETERMINED IN THE FIELD, USE ENCASEMENT WHERE VERTICAL CLEARANCE WATER MAIN AND SEWER MAIN IS LESS THAN 18 INCHES.
3. NO DUCTILE IRON SEWER PIPE IS PERMITTED.

HOLLY HILL FLORIDA	CITY OF HOLLY HILL, FLORIDA STANDARD CONSTRUCTION DETAILS SEWER / WATER / DRAINAGE CROSSING	DATE 02/2020 DETAIL NUMBER GD-19

REVISIONS

DATE	DESCRIPTION
4/11/23	CITY COMMENTS
5/17/23	ARCHITECT COMMENTS
5/18/23	BIDDING

1230 North US1, Suite 3
Ormond Beach, Florida 32174
Phone (386) 872-7784
www.Newkirk-Engineering.com
C.A. # 30209
L.C. # 26000584
© 2013
Civil Engineering
Transportation, CEI &
Landscape Architecture
NEWKIRK ENGINEERING INC.

CITY OF HOLLY HILL
STANDARD UTILITY DETAILS
REPLACEMENT FIRE STATION # 96
1020 DAYTONA AVENUE
HOLLY HILL, FL 32117

THIS DRAWING IS THE PROPERTY OF NEWKIRK ENGINEERING ANY USE OR REPRODUCTION IN WHOLE OR PART IS PROHIBITED WITHOUT THE EXPRESSED WRITTEN CONSENT OF NEWKIRK ENGINEERING COPYRIGHT 2013 ALL RIGHTS RESERVED

THIS ITEM HAS BEEN DIGITALLY SIGNED AND SEALED BY HARRY NEWKIRK, PE # 62971 ON

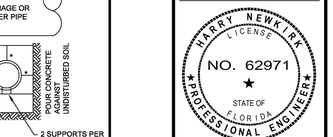

PRINTED COPIES OF THIS DOCUMENT ARE NOT CONSIDERED SIGNED AND SEALED AND THE SIGNATURE MUST BE VERIFIED ON ANY ELECTRONIC COPIES.

PROJECT No:	2022-205
DATE:	MAY 18, 2023
DESIGN BY:	HHN
DRAWN BY:	NWS
CHECKED BY:	HHN
SCALE:	AS SHOWN

DRAWING NUMBER

13

Attachment: Exhibit C - Fire Station #96 Bid Set (2023-R-55 : Fire Station Construction)

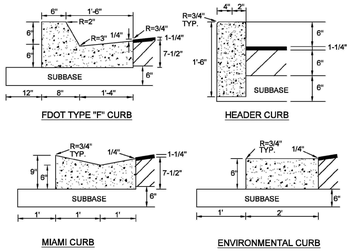

NOTES:

1. ALL CURBS TO BE CONSTRUCTED OF 28 DAY, 3000 P.S.I. CONCRETE
2. 1/2" PRE-MOLDED EXPANSION JOINT REQUIRED EVERY 500', CONSTRUCTION JOINT REQUIRED EVERY 10' MAXIMUM (4' MINIMUM).
3. 1/2" PRE-MOLDED EXPANSION JOINT REQUIRED AT EACH SIDE OF ALL STORM INLET STRUCTURES AND AT ALL RADIUS POINTS.
4. 6" SUBBASE TO BE COMPACTED AND TESTED TO 98% DENSITY BASED ON AASHTO T-180 MODIFIED PROCTOR TEST AND SHALL BE STABILIZED TO A MINIMUM L.B.R. 40.
5. EXPANSION JOINT MATERIAL MUST COVER THE ENTIRE CROSS SECTION OF CURB.
6. IN NO INSTANCE SHALL EXTRUDED CURBS (DEFINED AS HEADER-TYPE CURBS INSTALLED DIRECTLY ON TOP OF PAVEMENT) BE PERMITTED.
7. ALL ASPHALT AND/OR PAVER DRIVEWAY APRONS LOCATED IN PUBLIC RIGHTS-OF-WAY, SHALL INCLUDE CURBING.

HOLLY HILL FLORIDA	CITY OF HOLLY HILL, FLORIDA STANDARD CONSTRUCTION DETAILS	DATE 02/2020
	STANDARD CURB CONSTRUCTION	DETAIL NUMBER RD-9

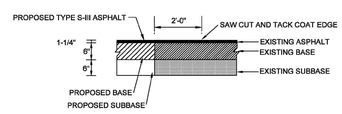

HOLLY HILL FLORIDA	CITY OF HOLLY HILL, FLORIDA STANDARD CONSTRUCTION DETAILS	DATE 02/2020
	PAVEMENT BUTT JOINT	DETAIL NUMBER RD-11

ROADWAY AND PARKING AREA DESIGN AND CONSTRUCTION NOTES (1 OF 5)

ALL MATERIALS AND INSTALLATION METHODS USED FOR LAND DEVELOPMENT CODE REQUIRED IMPROVEMENTS FOR SUBDIVISIONS AND SITE PLANS SHALL BE IN CONFORMANCE WITH THE CITY, FDOT STANDARD SPECIFICATIONS FOR ROAD AND BRIDGE CONSTRUCTION (LATEST EDITION), AND THE FDOT ROADWAY AND TRAFFIC DESIGN STANDARDS (LATEST EDITION).

1. ALL RIGHT-OF-WAY OTHER THAN ROADWAY AREAS SHALL BE GRASSED AND MULCHED OR SODDED. ALL SLOPES STEEPER THAN 6:1 SHALL REQUIRE SODDING. THE CITY RESERVES THE RIGHT TO REQUIRE SODDING IN SPECIAL AREAS WHERE EROSION IS A CONCERN.
2. THE FOLLOWING WILL BE THE STANDARD PROTECTION FOR DITCHES UNLESS DRAINAGE CALCULATIONS INDICATE OTHERWISE:

SWALE PROFILE GRADES	PROTECTION REQUIRED
0.2 %- 1.0 %	GRASSING AND MULCHING
1.0 %-4.0 %	SODDING
4.0 % AND GREATER	DITCH PAVING

3. THE PAVEMENT, BASE, AND SUBBASE THICKNESS PRESENTED ON DETAILS REPRESENTS THE MINIMUM REQUIREMENTS FOR LOCAL PUBLIC STREETS AND PRIVATE PARKING LOTS. THE CITY RESERVES THE RIGHT AT IT'S DISCRETION TO INCREASE THESE REQUIREMENTS FOR COLLECTOR AND ARTERIAL ROADWAYS AND PRIVATE PARKING LOTS SUBJECTED TO HEAVY VEHICULAR COMMERCIAL TRAFFIC.
4. THE DEVELOPER SHALL PROVIDE AT THEIR OWN EXPENSE A CERTIFIED SOILS ENGINEERING LABORATORY TO PERFORM ALL FIELD AND LABORATORY TESTING REQUIRED TO VERIFY THAT THE CONSTRUCTION IS IN COMPLIANCE WITH THE CITY'S MINIMUM STANDARDS. IT IS THE RESPONSIBILITY OF THE DEVELOPER TO ENSURE THAT COPIES OF ALL TEST REPORTS ARE PROVIDED TO THE CITY'S DESIGNATED SITE INSPECTOR PRIOR TO THE PROJECT FINAL INSPECTION IN ORDER TO ALLOW PROJECT ACCEPTANCE BY THE CITY.
5. THE LIMITS OF STABILIZED SUBBASE SHALL EXTEND TO A DEPTH OF SIX INCHES (6") BELOW THE BOTTOM OF THE BASE AND OUTWARD TO TWELVE INCHES (12") BEYOND THE CURB.
6. THE STABILIZING MATERIAL, IF REQUIRED, SHOULD BE A HIGH BEARING VALUE SOIL, SAND-CLAY, LIMEROCK, RECYCLED CONCRETE, SHELL, OR OTHER MATERIAL AS APPROVED BY THE CITY'S DESIGNATED SITE INSPECTOR AND A LICENSED SOILS ENGINEER.
7. THE SUBBASE SHALL BE STABILIZED NOT LESS THAN FORTY (40) POUNDS LIMEROCK BEARING RATIO (LBR) TO A 6" MINIMUM DEPTH, A COMPACTION OF NO LESS THAN NINETY-EIGHT (98%) PERCENT DENSITY BASED ON AASHTO T-180 SHALL BE REQUIRED.
8. FOR ROADWAYS, TESTS FOR SUBBASE BEARING CAPACITY AND COMPACTION SHALL BE DONE AT A MINIMUM OF EVERY 300 FEET AND SHALL BE STAGGERED TO THE LEFT, RIGHT, AND AT CENTER LINE OF THE ROADWAY. FOR SITE PLANS, TEST SHALL BE PERFORMED FOR EVERY 600 SQUARE YARDS OF STABILIZED AREA, OR PORTIONS THEREOF.
9. BASES FOR ALL STREETS SHALL HAVE A MINIMUM SIX INCH (6") DEPTH. SOIL CEMENT BASES SHALL HAVE A STRENGTH OF 350 POUNDS PER SQUARE INCH AT 7 DAYS COMPACTED TO 98% DENSITY PER AASHTO T-99 STANDARD PROCTOR TEST IN CONFORMANCE WITH SECTION 270 OF STANDARD FDOT STANDARD SPECIFICATIONS FOR ROAD AND BRIDGE CONSTRUCTION (LATEST EDITION). RECYCLED CONCRETE OR LIMEROCK BASES SHALL BE COMPACTED TO 98% MAXIMUM DENSITY BASED ON AASHTO T-180 MODIFIED PROCTOR TEST.

HOLLY HILL FLORIDA	CITY OF HOLLY HILL, FLORIDA STANDARD CONSTRUCTION DETAILS	DATE 02/2020
	ROADWAY AND PARKING AREA DESIGN AND CONSTRUCTION NOTES	DETAIL NUMBER RD-12.1

ROADWAY AND PARKING AREA DESIGN AND CONSTRUCTION NOTES (2 OF 5)

10. SOIL CEMENT AND RECYCLED CONCRETE MIX DESIGNS SHALL BE SUBMITTED BY A LICENSED SOILS ENGINEER TO THE CITY'S DESIGNATED SITE INSPECTOR PRIOR TO THE START OF SUBBASE PREPARATION. ALL MIX DESIGNS SHALL BE SUBJECT TO THE APPROVAL OF THE CITY.
11. CEMENT DELIVERY TICKETS SHALL BE PROVIDED TO THE CITY'S DESIGNATED SITE INSPECTOR AT THE TIME OF PLACEMENT. IF THE INSPECTOR IS NOT ON SITE THROUGHOUT THE ENTIRE INSTALLATION, ACCUMULATED DELIVERY TICKETS CAN BE PROVIDED TO THE INSPECTOR BY THE CONTRACTOR ON THE FOLLOWING DAY.
12. TESTING OF THE IN-PLACE BASE SHALL BE DONE AT INTERVALS EQUIVALENT TO SUBGRADE TESTING AND SHALL CONSIST OF, AS A MINIMUM, A MOISTURE CONTENT AND COMPACTION TEST.
13. PORTLAND CEMENT CONCRETE, LIMEROCK, RECYCLED CONCRETE, OR FULL DEPTH ASPHALT PAVEMENT MAY BE USED IN PLACE OF SOIL CEMENT BASE. ALL BASE AND ROADWAY DESIGNS SHALL BE SUBJECT TO THE APPROVAL OF THE CITY.
14. SOIL CEMENT BASE MATERIAL CONSTRUCTION SHALL BE CONTINUOUSLY SUPERVISED BY A SOILS TESTING LABORATORY AT THE DEVELOPER'S EXPENSE. THE TESTING LABORATORY SHALL PROVIDE AN ON-SITE TECHNICIAN CERTIFIED IN THE INSTALLATION OF SOIL CEMENT WITH THE CERTIFICATION RECOGNIZED BY FDOT.
15. SOIL CEMENT PAVEMENT BASES WITH THE CURE COAT APPLIED SHALL BE ALLOWED TO CURE A MINIMUM OF SEVEN (7) DAYS UNDER NO TRAFFIC PRIOR TO PLACING ANY ASPHALT SURFACE. (TEST REPORTS ARE REQUIRED TO BE DELIVERED TO THE CITY'S DESIGNATED SITE INSPECTOR PRIOR TO TRAFFIC USAGE.)
16. RECYCLED CONCRETE CAN BE USED AS AN ALTERNATIVE BASE MATERIAL PROVIDED THE MATERIAL IS A MINIMUM OF 60 % CARBONATE OF CALCIUM AND MAGNESIUM. THE MATERIAL SHALL BE LIMITED TO MAXIMUM OF 3 % OF WATER SENSITIVE CLAY MATERIAL, LIQUID LIMIT SHALL NOT EXCEED 35 AND BE NON-PLASTIC, AND THE PLASTICITY INDEX SHALL NOT EXCEED 10. THE MATERIAL SHALL NOT CONTAIN ORGANIC MATERIAL, CHERTY OR OTHER EXTREMELY HARD PIECES, LUMPS, BALLS OR POCKETS OF SAND SIZE MATERIAL OF A QUANTITY AS TO BE DETRIMENTAL TO THE PROPER BONDING, FINISHING, OR STRENGTH OF THE RECYCLED CONCRETE BASE. FOR BASE APPLICATIONS, AT LEAST 97 % (BY WEIGHT) OF THE MATERIAL SHALL PASS A 1" SIEVE AND FOR SUBBASE APPLICATIONS, AT LEAST 97 % (BY WEIGHT) OF THE MATERIAL SHALL PASS A 1-1/2" SIEVE. FOR BOTH APPLICATIONS, THE MATERIAL SHALL BE GRADED UNIFORMLY DOWN TO DUST AND THE MINIMUM LBR VALUES ARE TO BE NOT LESS THAN 130. COARSE AGGREGATE USED IN THE RECYCLED CONCRETE SHALL HAVE A MAXIMUM LOSS OF 45 % PER LOS ANGELES ABRASION TEST. ALL MATERIALS SHALL BE WELL GRADED IN ACCORDANCE WITH REQUIREMENTS SET FORTH IN THE FDOT STANDARD SPECIFICATIONS FOR ROAD AND BRIDGE CONSTRUCTION (LATEST EDITION).
17. RECYCLED CONCRETE OR LIMEROCK FOR BASE OR SUBBASE APPLICATIONS SHALL BE ALLOWED ON CITY ROADWAYS ONLY WHERE THE LOWEST ELEVATION OF THE ROADWAY SUBBASE IS A MINIMUM OF 6" ABOVE THE SEASONAL HIGH GROUNDWATER TABLE AS CERTIFIED BY A FLORIDA LICENSED PROFESSIONAL SOILS ENGINEER AND SUBSEQUENTLY APPROVED FOR BY THE CITY. IN AREAS NOT MEETING THESE STANDARDS A SOIL CEMENT BASE WILL BE REQUIRED. ALL CRUSHING OF RECYCLED CONCRETE SHALL BE DONE PRIOR TO THE MATERIAL BEING PLACED IN THE ROADWAY. TESTING SHALL HAVE THE SAME REQUIREMENTS AND BE PERFORMED AT THE SAME LOCATION AND INTERVALS AS REQUIRED FOR LIMEROCK.

HOLLY HILL FLORIDA	CITY OF HOLLY HILL, FLORIDA STANDARD CONSTRUCTION DETAILS	DATE 02/2020
	ROADWAY AND PARKING AREA DESIGN AND CONSTRUCTION NOTES	DETAIL NUMBER RD-12.2

ROADWAY AND PARKING AREA DESIGN AND CONSTRUCTION NOTES (3 OF 5)

18. DESIGN MIXES AND PRODUCT GRADATION INFORMATION FOR ALL MATERIALS TO BE INSTALLED AS PART OF THE LAND DEVELOPMENT CODE REQUIRED IMPROVEMENTS SHALL BE SUBMITTED TO THE CITY'S DESIGNATED SITE INSPECTOR FOR ACCEPTANCE BY THE CITY. THE INFORMATION SHALL BE SUBMITTED NO LESS THAN THREE (3) WORKING DAYS PRIOR TO ANY CONSTRUCTION. SUBMITTALS SHALL INCLUDE, BUT NOT BE LIMITED TO, INFORMATION TO EVALUATE THE MATERIALS PROPOSED FOR INSTALLATION AS SUBBASE, BASE, AND PAVEMENT FOR ALL ROADWAY AND PARKING AREA SURFACES AS WELL AS SIMILAR INFORMATION FOR ALL OTHER CONCRETE SIDEWALKS, CURBING, AND COMPARABLE STRUCTURES AND APPLICATIONS.
19. ALL WEARING COURSE HOT MIX AGGREGATES SHALL BE VIRGIN MATERIAL. THE USE OF RECYCLED ASPHALT MATERIAL (RAP) IN WEARING COURSE MIXES IS NOT ALLOWED.
20. PRIOR TO PLACEMENT FLORIDA-STATE CERTIFIED BATCH PLANTS MUST CERTIFY TO THE CITY'S RESIDENT PROJECT INSPECTOR THAT THE ASPHALT DELIVERED TO THE SITE IS IN ACCORDANCE WITH THE APPROVED PLANS AND SPECIFICATIONS.
21. EXTRACTION AND GRADATION TESTS ON ASPHALT MIXES SHALL BE PROVIDED TO THE CITY'S DESIGNATED SITE INSPECTOR FOR EVERY 2500 SQUARE YARDS OF ASPHALT, OR PART THEREOF, TO ENSURE THAT DESIGN MIXES MEET THE CITY STANDARD SPECIFICATIONS.
22. FIELD TESTING OF THE ASPHALT PAVEMENT SHALL BE DONE AT INTERVALS EQUIVALENT TO SUBGRADE TESTING AND SHALL CONSIST OF, AS A MINIMUM, A COMPACTION TEST. ASPHALT PAVEMENT SHALL BE COMPACTED TO 98% DENSITY PER FM 1-T238 (METHOD B), NUCLEAR DENSITY TEST, "BACKSCATTER METHOD".
23. IN ADDITION TO THE FIELD DENSITY TESTS NOTED, THE CITY RESERVES THE RIGHT TO REQUIRE CORE SAMPLES OF PAVEMENT SECTIONS EXTRACTED AND TESTED BY A CERTIFIED SOILS ENGINEERING LABORATORY AT THE DEVELOPER'S EXPENSE. THE CITY'S DESIGNATED SITE INSPECTOR SHALL DESIGNATE THE LOCATIONS OF THE TEST CORE LOCATIONS.
24. THE ROADWAY CROWN SHALL HAVE A STANDARD ONE QUARTER INCH (1/4") PER FOOT SLOPE.
25. ALL ROADWAYS WITH CURB AND GUTTER SECTIONS SHALL HAVE AS A STANDARD A MINIMUM LONGITUDINAL SLOPE OF 0.30%. THE ROADWAY CENTERLINE SHALL BE CLEARLY MARKED ON THE DESIGN PLANS. AT A MINIMUM, DESIGN ROADWAY CENTERLINE ELEVATIONS SHALL BE NOTED AT ALL GRADE CHANGES AND AT INTERVALS ALONG THE ROADWAY PROFILE ON BOTH THE DESIGN PLANS AND AS-BUILT DRAWINGS.
26. THE FINISHED PAVEMENT EDGE SHALL BE WITHIN ONE QUARTER INCH (1/4") ABOVE THE ADJACENT CONCRETE CURB FOR CURBS COLLECTING AND CONVEYING STORMWATER.
27. CONCRETE CURBS SHALL BE PROVIDED ON BOTH SIDES OF ALL STREETS AND ALL CONCRETE CURBS SHALL BE CONSTRUCTED WITH 3000 P.S.I. CONCRETE AT 28 DAYS.
28. CONCRETE CURBING, SIDEWALKS, PAVEMENT AND SIMILAR CONCRETE AREAS SHALL BE SAW CUT WITHIN 4 TO 18 HOURS OF PLACEMENT. SAW CUTS SHALL BE 1/4" IN WIDTH TO A DEPTH OF 1/4 OF THE TOTAL DEPTH OF CONCRETE OR 1-1/2", WHICHEVER IS LESS. SAW CUTS SHALL BE LOCATED AT INTERVALS OF TEN FEET (10') WITH EXPANSION JOINTS AT STREET INTERSECTIONS, RADIUS POINTS, STRUCTURES, AND ALONG CURVES AT SIXTY FEET (60') INTERVALS. ALL EXPANSION JOINT MATERIAL IS REQUIRED TO BE INSTALLED THROUGH THE ENTIRE DEPTH OF THE CONCRETE CURB. FOR LINEAL SECTIONS OF CURBS, EXPANSION JOINTS SHALL BE LOCATED AT A MAXIMUM SPACING OF FIVE-HUNDRED FEET (500') AND SHALL BE 1/2" IN WIDTH.

HOLLY HILL FLORIDA	CITY OF HOLLY HILL, FLORIDA STANDARD CONSTRUCTION DETAILS	DATE 02/2020
	ROADWAY AND PARKING AREA DESIGN AND CONSTRUCTION NOTES	DETAIL NUMBER RD-12.3

ROADWAY AND PARKING AREA DESIGN AND CONSTRUCTION NOTES (4 OF 5)

29. AN "X" SHALL BE CUT IN THE CURB TO MARK THE LOCATION OF WATER DISTRIBUTION SYSTEM VALVES.
30. A "V" SHALL BE CUT IN THE CURB TO MARK THE LOCATION OF ALL SEWER SERVICES.
31. A "L" SHALL BE CUT IN THE CURB TO MARK THE LOCATION OF ALL RECLAIMED WATER SERVICES.
32. A "A" SHALL BE CUT IN THE CURB TO MARK THE LOCATION OF ALL POTABLE WATER SERVICES.
33. THREE (3) CONCRETE CYLINDERS SHALL BE TAKEN AND TESTED (1 IN 14 DAYS AND 1 IN 28 DAYS) FOR EVERY SEVENTY-FIVE (75) CUBIC YARDS OF CONCRETE OR LESS PLACED. TEST RESULTS SHALL THEN BE PROVIDED TO THE CITY'S DESIGNATED SITE INSPECTOR AS THEY BECOME AVAILABLE.
34. A CONCRETE SLUMP TEST SHALL BE REQUIRED WITHIN THE FIRST 30 CUBIC YARDS OF CONCRETE. THEREAFTER, SLUMP TESTS SHALL BE REQUIRED FOR EVERY THIRTY (30) CUBIC YARDS OF CONCRETE, OR FRACTION THEREOF, WITH COPIES OF THE RESULTS PROVIDED TO THE CITY'S DESIGNATED SITE INSPECTOR. THE SLUMP TEST SHALL MEET THE REQUIRED MIX DESIGN ON EACH LOAD DELIVERED.
35. THE DEVELOPER SHALL PROVIDE ALL REQUIRED PAVEMENT MARKINGS ON ALL ROADWAYS PER CITY, COUNTY, AND STATE REQUIREMENTS. CENTERLINE STRIPES SHALL BE PROVIDED ON EXTENSIONS OF CITY COLLECTOR OR ARTERIAL ROADS. COUNTY ROADS, STATE HIGHWAYS, AND ALONG LOCAL STREETS IN THE VICINITY OF THEIR INTERSECTION WITH THE ABOVE MENTIONED ROADWAYS.
36. A FDOT APPROVED STOP SIGN AND A 24"-WIDE WHITE THERMOPLASTIC STOP BAR ARE REQUIRED AT ALL ROADWAY INTERSECTIONS.
37. ALL TRAFFIC CONTROL DEVICES PLACED AT INTERSECTIONS, PRIVATE STREETS, PUBLIC STREETS, COUNTY ROADS, AND STATE HIGHWAYS WITHIN THE CITY LIMITS SHALL BE INSTALLED ACCORDING TO THE MANUAL ON UNIFORM TRAFFIC CONTROL DEVICES, LATEST EDITION. THE MAINTENANCE-OF-TRAFFIC (MOT) INSTALLATION AND SUBSEQUENT OPERATION SHALL BE OVERSEEN BY A CONTRACTOR CERTIFIED BY THE AMERICAN TRAFFIC SAFETY SERVICES ASSOCIATION, OR EQUIVALENT CERTIFICATION RECOGNIZED BY FDOT.
38. THE DEVELOPER IS RESPONSIBLE FOR PAYING FEES FOR TRAFFIC CONTROL DEVICES TO THE CITY FOR INSTALLATION. STREET SIGNS AND STOP SIGNS SHALL BE PLACED AT ALL INTERSECTIONS, INCLUDING BUT NOT LIMITED TO PRIVATE STREETS, PUBLIC STREETS, COUNTY ROADS, AND STATE HIGHWAYS WITHIN THE CITY LIMITS.
39. THE DEVELOPER IS RESPONSIBLE FOR PAYING FEES FOR ALL STREET LIGHTS PRIOR TO ACCEPTANCE OF THE PROJECT BY THE CITY.
40. FOUR FOOT (4') WIDE SIDEWALKS SHALL BE PROVIDED ON BOTH SIDES OF ALL RESIDENTIAL STREETS (SEE DETAILS GD-3 THRU GD-5).
41. BIKE PATHS SHALL BE CONSTRUCTED EIGHT FEET (8') IN WIDTH ALONG ARTERIAL HIGHWAYS AS DIRECTED BY THE CITY (SEE DETAILGD-3 THRU GD-5).
42. STANDARD TURNING RADII FOR INTERSECTIONS:

RESIDENTIAL STREETS WITH STATE & COUNTY ROADWAYS OR MAJOR THOROUGHFARES WITHIN THE CITY	35-50 FT.
ENTRANCES TO COMMERCIAL SITES OFF OF CITY STREETS	35 FT.
INTERSECTIONS INTERIOR IN SUBDIVISIONS	35 FT.

SHOULD VOLUSIA COUNTY OR THE FLORIDA DEPARTMENT OF TRANSPORTATION (FDOT) DETERMINE THAT LARGER RADII ARE WARRANTED WITHIN THEIR RIGHT-OF-WAY, THE LARGER RADII SHALL PREVAIL.

HOLLY HILL FLORIDA	CITY OF HOLLY HILL, FLORIDA STANDARD CONSTRUCTION DETAILS	DATE 02/2020
	ROADWAY AND PARKING AREA DESIGN AND CONSTRUCTION NOTES	DETAIL NUMBER RD-12.4

ROADWAY AND PARKING AREA DESIGN AND CONSTRUCTION NOTES (5 OF 5)

43. CONSTRUCTION METHODS AND DESIGN FOR CONCRETE PAVEMENT SHALL CONFORM TO FDOT STANDARD SPECIFICATIONS FOR ROAD AND BRIDGE CONSTRUCTION (LATEST EDITION).
44. ALL CONTRACTORS THAT ARE PERFORMING THE CONSTRUCTION OF LAND DEVELOPMENT CODE REQUIRED IMPROVEMENTS (INCLUDING WATER MAINS, SANITARY SEWER MAINS, RECLAIMED WATER MAINS, STORM WATER PIPES AND INLETS, ROADWAYS, AND PARKING FACILITIES) SHALL BE CERTIFIED WITH THE STATE OF FLORIDA BOARD OF PROFESSIONAL REGULATIONS (BPR) FOR THE TYPE OF WORK THAT THEY PERFORM.
45. ALL CONTRACTORS THAT ARE PERFORMING THE CONSTRUCTION WORK OF LAND DEVELOPMENT CODE REQUIRED IMPROVEMENTS SHALL BE LICENSED BY THE STATE OF FLORIDA AND REGISTERED WITH THE CITY. THE LICENSE AND REGISTRATION SHALL PERTAIN DIRECTLY TO THE TYPE OF WORK BEING PERFORMED.
46. EXCEPT AS PROVIDED IN THE LAND DEVELOPMENT CODE. ALL ELECTRIC, TELEPHONE, TELEVISION LINES AND SIMILAR UTILITIES ARE REQUIRED TO BE INSTALLED UNDERGROUND AT THE EXPENSE OF THE OWNER, DEVELOPER, AND BUILDER.
47. UTILITY DEPTH:
    A. HIGH VOLTAGE UTILITIES SUCH AS POWER (FEEDER, SERVICE, AND DROPS) SHALL BE BURIED A MINIMUM OF 30 INCHES IN DEPTH.
    B. LOW VOLTAGE UTILITIES SUCH AS PHONE AND CABLE TV SHALL BE BURIED A MINIMUM OF 18 INCHES IN DEPTH FOR FEEDER AND SERVICES. SERVICE DROPS SHALL BE BURIED A MINIMUM OF 12 INCHES IN DEPTH.
    C. IN NO INSTANCE SHALL THE DEPTH OF COVER BE LESS THAN 30" FROM FINISHED GRADE TO THE TOP OF PIPE FOR POTABLE WATER MAINS, SANITARY SEWER MAINS, AND RECLAIMED WATER MAINS. HOWEVER, IN THE EVENT THAT THIS CONDITION CANNOT BE MET DUE TO UNANTICIPATED CONFLICTS DURING THE CONSTRUCTION PROCESS, DUCTILE IRON PRESSURE CLASS 350 OR CONCRETE ENCASEMENT MAY BE USED AS APPROVED BY THE CITY PUBLIC WORKS DEPARTMENT.
48. LANDSCAPE PLANS SHALL CLEARLY DEPICT THE DESIGN LOCATION OF PLANTINGS RELATIVE TO THE LOCATION OF UNDERGROUND AND OVERHEAD PUBLIC UTILITIES AND STORMWATER INFRASTRUCTURE IN ORDER TO EVALUATE POTENTIAL CONFLICTS.

HOLLY HILL FLORIDA	CITY OF HOLLY HILL, FLORIDA STANDARD CONSTRUCTION DETAILS	DATE 02/2020
	ROADWAY AND PARKING AREA DESIGN AND CONSTRUCTION NOTES	DETAIL NUMBER RD-12.5

TECHNICAL SPECIFICATIONS FOR SITE PLANS AND SUBDIVISION TESTING

A. MATERIALS
THE INSPECTION AND TESTING OF MATERIALS AND FINISHED ARTICLES TO BE INCORPORATED IN THE WORK SHALL BE MADE BY BUREAUS, LABORATORIES, OR AGENCIES APPROVED BY THE ENGINEER OF RECORD. THE CONTRACTOR SHALL SUBMIT SUCH SAMPLES, OR SUCH SPECIAL OR TEST PIECES OF MATERIALS AS THE ENGINEER OF RECORD MAY REQUIRE. THE CONTRACTOR SHALL NOT INCORPORATE ANY MATERIAL OR FINISHED ARTICLE INTO THE WORK UNTIL THE RESULTS OF THE INSPECTIONS OR TESTS ARE KNOWN AND THE CONTRACTOR HAS BEEN NOTIFIED BY THE ENGINEER OF RECORD THAT THE MATERIAL OR FINISHED ARTICLE IS ACCEPTED. ALL MATERIALS MUST BE OF THE SPECIFIED QUALITY AND BE EQUAL TO THE APPROVED SAMPLE IF A SAMPLE HAS BEEN SUBMITTED. CERTIFIED COPIES OF ALL TESTS MADE SHALL BE SUBMITTED TO THE ENGINEER OF RECORD AS WELL AS TO THE CITY'S DESIGNATED SITE INSPECTOR. THE CITY'S DESIGNATED SITE INSPECTOR MUST RECEIVE COPIES OF ALL TESTING REPORTS AND CERTIFICATES PRIOR TO THE ENGINEER OF RECORD REQUESTING A FINAL PROJECT INSPECTION FROM THE CITY.

B. LABORATORY CONTROL AND CERTIFICATES

1. SPECIFICATIONS
SAMPLING, TESTING, AND LABORATORY METHODS SHALL BE IN ACCORDANCE WITH THE STANDARD SPECIFICATIONS OF THE AASHTO OR ASTM. WHERE AASHTO OR ASTM SPECIFICATIONS ARE USED, THE REFERENCE SHALL BE CONSTRUED TO BE THE MOST RECENT STANDARD SPECIFICATIONS OR TENTATIVE SPECIFICATIONS OF THE AASHTO OR ASTM IN FORCE ON THE DATE OF THE TEST.
2. TEST & CERTIFICATES
THE CONTRACTOR SHALL ENGAGE AN APPROVED TESTING LABORATORY TO PROVIDE THE FOLLOWING TESTS AND CERTIFICATIONS SIGNED BY A REGISTERED ENGINEER OF THE STATE OF FLORIDA. ALL TECHNICIANS PERFORMING THE TESTS SHALL BE STATE CERTIFIED FOR THE TESTING PERFORMED. ADDITIONAL TESTS THAT MAY BE REQUIRED BY EITHER THE ENGINEER OF RECORD OR THE CITY SHALL ALSO BE PROVIDED BY THE CONTRACTOR, AND THE FOLLOWING SHALL NOT BE TAKEN AS A COMPLETE AND EXHAUSTIVE LIST OF THE CONTRACTOR'S TESTING RESPONSIBILITIES.

A. SOIL ANALYSIS FOR STRUCTURAL FILL MATERIAL PRIOR TO INSTALLATION.
B. PROCTOR DENSITIES, MOISTURE CONTENT, COMPACTED FIELD DENSITIES, AND ATTERBERG LIMITS.
C. SOIL CEMENT MIX DESIGNS AND COMPRESSIVE STRENGTH TESTS (FOR SOIL CEMENT ROAD BASE ONLY).
D. SUPERVISION OF ALL SOIL CEMENT BASE CONSTRUCTION.
E. ANALYSIS OF RECYCLED CONCRETE BASE MATERIAL PRIOR TO INSTALLATION.
F. ASPHALT MIX DESIGN, BITUMEN CONTENT, SIEVE ANALYSIS, HUBBARD FIELD STABILITY TESTS, NUCLEAR DENSITY TESTS (BACKSCATTER METHOD), AND ANALYSIS OF CORE SAMPLES.
G. CONCRETE MIX DESIGNS FOR ALL APPLICATIONS INCLUDING PAVEMENT, CAST-IN-PLACE STRUCTURES, CURBING, GUTTERS, SIDEWALKS, BIKE PATHS, APRONS AND DRIVEWAYS.
H. COMPRESSIVE TEST CYLINDERS AND SLUMP TESTS FOR ALL APPLICATIONS OF CONCRETE, INCLUDING PAVEMENT, CAST-IN-PLACE STRUCTURES, CURBING, GUTTERS, SIDEWALKS, BIKE PATHS, APRONS, AND DRIVEWAYS.
I. CHLORINE RESIDUAL AND BACTERIOLOGICAL TESTING OF WATER MAINS.
J. PRESSURIZED LEAK TESTING OF WATER MAINS, FORCE MAINS, AND RECLAIMED WATER MAINS.

HOLLY HILL FLORIDA	CITY OF HOLLY HILL, FLORIDA STANDARD CONSTRUCTION DETAILS	DATE 02/2020
	TECHNICAL SPECIFICATIONS FOR SITE PLANS AND SUBDIVISION TESTING	DETAIL NUMBER RD-13

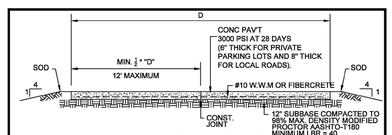

TYPICAL PAVEMENT SECTION

NOTE:
FOR ROADWAYS, THE CROSS SLOPE SHALL BE 1/4" PER FOOT. FOR PRIVATE PARKING AREAS THE MINIMUM ALLOWABLE PAVEMENT SLOPE SHALL BE NO LESS THAN 0.50% MEASURED FROM THE RECEIVING INLET, GUTTER, OR FLUME TO ANY PAVEMENT.

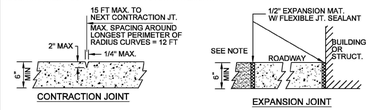

CONTRACTION JOINT

EXPANSION JOINT

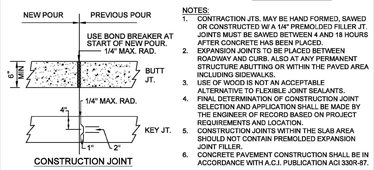

CONSTRUCTION JOINT

NOTES:
1. CONTRACTION JTS. MAY BE HAND FORMED, SAWED OR CONSTRUCTED W/ A 1/4" PREMOLDED FILLER JT. JOINTS MUST BE SAWED BETWEEN 4 AND 18 HOURS AFTER CONCRETE HAS BEEN PLACED.
2. EXPANSION JOINTS TO BE PLACED BETWEEN ROADWAY AND CURB. ALSO AT ANY PERMANENT STRUCTURE ABUTTING OR WITHIN THE PAVED AREA INCLUDING SIDEWALKS.
3. USE OF WOOD IS NOT AN ACCEPTABLE ALTERNATIVE TO FLEXIBLE JOINT SEALANTS.
4. FINAL DETERMINATION OF CONSTRUCTION JOINT SELECTION AND APPLICATION SHALL BE MADE BY THE ENGINEER OF RECORD BASED ON PROJECT REQUIREMENTS AND LOCATION.
5. CONSTRUCTION JOINTS WITHIN THE SLAB AREA SHOULD NOT CONTAIN PREMOLDED EXPANSION JOINT FILLER.
6. CONCRETE PAVEMENT CONSTRUCTION SHALL BE IN ACCORDANCE WITH A.C.I. PUBLICATION ACI 330R-87.

HOLLY HILL FLORIDA	CITY OF HOLLY HILL, FLORIDA STANDARD CONSTRUCTION DETAILS	DATE 02/2020
	CONCRETE PAVEMENT DETAILS	DETAIL NUMBER RD-14

SUBDIVISION TECHNICAL SPECIFICATIONS:SODDING, SEEDING, AND MULCHING

A. SCOPE OF WORK:
THE WORK IN THIS SECTION CONSISTS OF FURNISHING AND COMPLETELY INSTALLING SOD, OR SEED AND MULCH OVER THE LIMITS CALLED FOR ON THE CONSTRUCTION DRAWINGS. AT A MINIMUM, ALL WORK SHALL MEET THE MINIMUM SPECIFICATIONS OF THE FDOT STANDARD SPECIFICATIONS FOR ROAD AND BRIDGE CONSTRUCTION (LATEST EDITION). IN ADDITION, ALL WORK SHALL MEET THE MINIMUM REQUIREMENTS OF THE CITY.

B. MATERIALS
GRASS SEED SHALL BE A MIXTURE OF:

PENSACOLA BAHIA	50%
(USE 50 % SCARIFIED SEED)	
HULLED BERMUDA	25%
BROWN TOP MILLET	25%

IN THE FALL AND WINTER MONTHS, AND WITH THE APPROVAL OF THE CITY, ANNUAL RYE GRASS SHALL BE SUBSTITUTED IN EQUAL AMOUNTS FOR THE BROWN TOP MILLET. SEED SHALL BE PRE-MIXED BY A SEED COMPANY TO THE PERCENTAGES DESCRIBED ABOVE, WITH CERTIFICATION FROM THE SUPPLIER PROVIDED TO THE CITY'S DESIGNATED PROJECT LANDSCAPE INSPECTOR PRIOR TO USE. MULCH USED SHALL BE STRAW OR HAY CONSISTING OF OATS, RYE, O

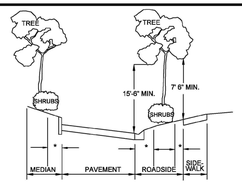

ROADWAY CLEAR ZONES (*)					
	DESIGN SPEED (MPH)				
TYPE FACILITY	25 & BELOW	30	35	40	45+
DISTANCE FROM EDGE OF PAVEMENT	6'	6' LOCAL 10' COLLECTOR 14' ARTERIAL	6' LOCAL 10' COLLECTOR 14' ARTERIAL	10' COLLECTOR 14' ARTERIAL	FDOT STANDARD
DISTANCE FROM SIDEWALK	1.5	1.5	1.5	1.5	FDOT STANDARD

NOTES:
1. THE CLEAR ZONE MAY BE REDUCED ON A CASE BY CASE BASIS IF THE MINIMUM OFFSET CANNOT BE REASONABLY OBTAINED OR IF A NON-MOUNTABLE CURB TYPE IS INSTALLED.
2. TREES IN EXCESS OF 12" CALIPER AT MATURITY AND MULTI-TRUNKED PALMS SHALL BE SET BACK TO TWICE THE MINIMUM CLEAR ZONE (2 X *).
3. WHERE PAVEMENT WIDENING IN ACCORDANCE WITH FDOT STANDARDS IS NOT PROVIDED IN HORIZONTAL CURVES, ADDITIONAL CLEAR ZONE SHALL BE PROVIDED EQUAL TO THE REQUIRED PAVEMENT WIDENING.
4. CLEAR ZONES ON CURBED ROADS SHALL BE MEASURED FROM THE FACE OF CURB OR FROM THE EDGE OF THE THROUGH LANE ON RURAL ROADS. CURBED STREETS ARE FOR HIGH BACK CURBS ONLY.
5. SHRUBS ADJACENT TO SIDEWALKS AND WITHIN INTERSECTION SIGHT TRIANGLES CANNOT EXCEED 24" ABOVE THE LOWEST ADJACENT ROADWAY GRADE. ALL OTHER SHRUBS MUST BE LESS THAN OR EQUAL TO 30 INCHES IN HEIGHT.
6. INSTALLATION OF LANDSCAPING IN PUBLIC RIGHTS-OF-WAY REQUIRES EXECUTION OF A "USE AGREEMENT" BETWEEN THE DEVELOPER AND THE CITY. FOR INSTANCES WHERE THE STREETS AND PRIVATE AND PUBLIC UTILITY EASEMENTS ARE PROVIDED, THE DEVELOPER MAY BE REQUIRED TO OBTAIN A RELEASE FROM THE FRANCHISE UTILITIES IN ORDER TO INSTALL THE LANDSCAPING IMPROVEMENTS.
7. LANDSCAPING PLANS SHALL CLEARLY DEPICT THE DESIGN LOCATION OF PLANTINGS RELATIVE TO THE LOCATION OF UNDERGROUND AND OVERHEAD PUBLIC UTILITIES AND STORMWATER INFRASTRUCTURE IN ORDER TO EVALUATE POTENTIAL CONFLICTS.
8. SHRUBS, UNDERSTORY, TREES AND PALMS SHALL BE ALLOWED IN THE RIGHT-OF-WAY WITH EXISTING AND PROPOSED UTILITIES. SHADE TREES, ESPECIALLY THOSE WITH AGGRESSIVE ROOT SYSTEMS, WILL REQUIRE SPECIFIC CITY APPROVAL.
9. SHADE TREES MUST NOT BE PLANTED UNDER OR DIRECTLY ADJACENT TO OVERHEAD UTILITIES THAT WOULD REQUIRE EXCESSIVE PRUNING TO AVOID THE UTILITY LINES.
10. TREES WITH AGGRESSIVE ROOT SYSTEMS SHALL REQUIRE SOME FORM OF ROOT GUIDING SYSTEM TO PREVENT THE UPHEAVAL OF ADJACENT ROADWAY PAVEMENT AND/OR SIDEWALKS.

HOLLY HILL FLORIDA	CITY OF HOLLY HILL, FLORIDA STANDARD CONSTRUCTION DETAILS ROADWAY AND MISC. LANDSCAPING DESIGN AND CONSTRUCTION NOTES	DATE 02/2020 DETAIL NUMBER RD-16

SANITARY SEWER CONSTRUCTION NOTES (1 OF 4)

1. THE CITY'S PUBLIC WORKS DEPARTMENT SHALL BE GIVEN A MINIMUM OF 2 BUSINESS DAYS ADVANCE NOTICE (NOT INCLUDING HOLIDAYS OR WEEKENDS) PRIOR TO BEGINNING ANY SANITARY SEWER CONSTRUCTION.
2. ALL GRAVITY SANITARY SEWER LINES SHALL BE GREEN PVC SDR 26, ASTM D-3034. IN PLACES WHERE A MINIMUM COVER OF 4.0' CANNOT BE MAINTAINED, AWWA C-900 OR C-905 GREEN PVC DR-25, CLASS 100 OR CONCRETE ENCASEMENT SHALL BE USED. WATER LINES, RECLAIMED LINES, AND STORM DRAINAGE CROSSINGS SHALL ALSO FOLLOW THE CONCRETE ENCASEMENT REQUIREMENT PER THESE STANDARDS AND AS PER REGULATORY REQUIREMENTS.
3. GRAVITY SANITARY SEWER LINE CONSTRUCTION SHALL BE ACCOMPLISHED BY THE USE OF A LASER INSTRUMENT UNLESS ANOTHER METHOD IS PREVIOUSLY APPROVED BY THE CITY.
4. THE CONTRACTOR SHALL AT ALL TIMES, DURING PIPE LAYING OPERATIONS DEWATER THE GROUND SUFFICIENTLY TO KEEP THE GROUNDWATER ELEVATION A MINIMUM OF 6" BELOW THE PIPE BEING LAID WITHIN THE AREA OF THE TRENCH.
5. ALL PIPES SHALL BE LAID ON A FIRM FOUNDATION. SOFT OR SPONGY BEDDING FOR PIPES IS NOT ACCEPTABLE. ANY UNSUITABLE MATERIAL SHALL BE REMOVED AND REPLACED WITH A DRY, COMPACTED, GRANULAR MATERIAL SATISFACTORY TO THE CITY.
6. ON ALL EXCAVATION AND BACKFILLING THE CONTRACTOR SHALL PROVIDE ADEQUATE SHEETING AND BRACING IN ACCORDANCE TO O.S.H.A. GUIDELINE IN ORDER TO PROVIDE FOR THE SAFETY OF WORKMEN, AS WELL AS REPRESENTATIVES OF THE CITY, THE DESIGN ENGINEER, AND THE DEVELOPER.
7. ALL TRENCHES SHALL BE BACKFILLED WITH ACCEPTABLE MATERIAL AND COMPACTED TO THE SPECIFIED MINIMUM COMPACTION (95% IN UNPAVED AREAS AND 98% IN PAVED AREAS) OF THE MAXIMUM DENSITY OF THAT MATERIAL BASED ON THE AASHTO T-180 MODIFIED PROCTOR TEST.
8. THE CONTRACTOR SHALL EMPLOY AN INDEPENDENT TESTING LABORATORY AT HIS OWN EXPENSE TO INSURE THAT COMPACTION OF ALL FILL MATERIAL IS COMPLETED PROPERLY. TESTS SHALL BE DONE ONE FOOT ABOVE THE PIPE AND THEN AT ONE FOOT VERTICAL INTERVALS UNTIL FINAL GRADE IS REACHED. TESTING SHALL BE COMPLETED AND TEST DOCUMENTS SUBMITTED TO THE CITY AT A MINIMUM FREQUENCY OF ONE SET OF TESTS BETWEEN EACH MANHOLE AND ONE ADDITIONAL SET OF TESTS AT EVERY MANHOLE. IDENTIFICATION OF TEST LOCATIONS SHALL BE CLEARLY INDICATED ON TEST REPORTS. TEST RESULTS SHALL BE FORWARDED PROMPTLY TO THE CITY'S DESIGNATED SITE INSPECTOR.
9. THE CONTRACTOR SHALL INSTALL A METALLIZED FOIL LOCATOR TAPE, OR SIMILAR DEVICE AS MAY BE APPROVED BY THE CITY FOR THE FULL LENGTH OF ALL PVC SEWAGE FORCE MAINS. THIS PIPE LOCATOR AID SHALL BE INSTALLED BETWEEN 15" AND 24" BELOW FINISHED GRADE OR AS DIRECTED BY THE MANUFACTURER. TAPE SHALL BE COLOR CODED GREEN FOR SANITARY SEWER AND FORCE MAIN, A CONTINUOUS NO. 10 COPPER HEAD WIRE SHALL BE INSTALLED WITH WIRE BROUGHT UP AT ALL VALVES.
10. ALL TESTING REQUIRED BY THE CITY SHALL BE PAID FOR BY THE CONTRACTOR / DEVELOPER.
11. MANHOLE RIMS SHALL MATCH FLUSH WITH THE FINISH GRADE ELEVATION IN PAVED AREAS AND A MINIMUM OF 0.2 FEET AND MAXIMUM OF 0.5 FEET ABOVE GRADE GENERALLY IN UNPAVED AREAS.
12. THE CONTRACTOR SHALL CONSTRUCT SANITARY SEWER MANHOLES IN SUCH A WAY THAT SEWER LINES DO NOT INTERSECT SEALED JOINTS BETWEEN SECTIONS OF THE MANHOLE.
13. RUBBER BOOTS AND 316 STAINLESS STEEL BANDS SHALL BE UTILIZED IN THE CONNECTION OF THE SEWER MAIN TO THE MANHOLES (SEE STANDARD MANHOLE AND BOOT DETAILS).

HOLLY HILL FLORIDA	CITY OF HOLLY HILL, FLORIDA STANDARD CONSTRUCTION DETAILS SANITARY SEWER CONSTRUCTION NOTES	DATE 02/2020 DETAIL NUMBER SS-2.1

SANITARY SEWER DESIGN NOTES (2 OF 4)

14. INDIVIDUAL SANITARY SERVICE ON NEW CONSTRUCTION SHALL NOT BE CONNECTED DIRECTLY INTO MANHOLES, AND MUST CONNECTED TO SEWER MAIN LINES BY USE OF WYE CONNECTIONS, UNLESS OTHERWISE APPROVED BY THE CITY.
15. FOR SINGLE FAMILY HOMES, SINGLE FOUR INCH SEWER SERVICES LATERALS SHALL BE CONSTRUCTED AT EACH LOT OR UNIT AND LOCATED ON THE DOWNSTREAM SIDE OF THE LOT CENTER LINE. THESE SERVICES SHALL BE EXTENDED 4 FEET ABOVE GROUND AT THE PROPERTY LINE WITH A PVC RISER AND PLUG BEING EASILY VISIBLE FROM THE ROAD. RUBBER SEAL FITTINGS SHALL BE USED ON ALL LINES. NO GLUED JOINTS ARE PERMITTED ON LATERALS.
16. ALL SANITARY SEWER MANHOLE COVERS SHALL HAVE THE WORDS "HOLLY HILL FLORIDA SANITARY SEWER" CAST INTO THEM.
17. FORCE MAIN SYSTEMS SHALL BE PRESSURE TESTED AT 100 PSI STATIC PRESSURE FOR A PERIOD OF 2 HOURS PER AWWA STANDARDS.
18. ALL SANITARY SEWER FORCE MAINS SHALL USE A THRUST RESTRAINT JOINT METHOD IN COMPLIANCE WITH THE DUCTILE IRON PIPE RESEARCH ASSOCIATION GUIDELINES MODIFIED TO ACCOMMODATE PVC PIPE BY FOLLOWING THE RECOMMENDED INCREASE IN RESTRAINT LENGTH CORRESPONDING TO THE INSTALLATION OF POLYETHYLENE WRAP. IN NO INSTANCE SHALL THRUST BLOCKS BE PERMITTED.
19. THE CITY MAY REQUIRE ALL NEW SANITARY SEWER GRAVITY SYSTEMS TO BE SMOKE TESTED PRIOR TO FINAL ACCEPTANCE. ALL TESTING MUST BE DONE IN THE PRESENCE OF THE CITY'S DESIGNATED SITE INSPECTOR.
20. THE CITY RESERVES THE RIGHT TO REQUIRE THE DEVELOPER TO PERFORM VACUUM TESTING OF ALL SANITARY MANHOLES, AIR TEST SEWER MAINS, AND REQUIRES THAT ALL SANITARY SEWER MAIN LINES BE TELEVISED PRIOR TO FINAL ACCEPTANCE. LATERALS SHALL BE TELEVISED UPON DEMAND BY THE CITY PRIOR TO FINAL ACCEPTANCE WHEN IT IS SUSPECTED THAT A PROBLEM EXISTS.
21. ALL SEWER MAINS, PRIOR TO FINAL ACCEPTANCE BY THE CITY AND PRIOR TO ANY FINAL PAVING OPERATIONS, SHALL BE TELEVISED AND SUBMITTED TO THE CITY USING A "PAN AND TILT CAMERA" WITH DEPTH GAUGE IN FRONT OF THE CAMERA BY A CITY APPROVED CONTRACTOR. THE CAMERA SHALL RUN FROM DOWN STREAM MANHOLE TO UP STREAM MANHOLE. CITY INSPECTOR SHALL BE NOTIFIED IN ADVANCE AND BE PRESENT DURING THE TELEVISING OF THE SEWER SYSTEM. THE VIDEO SHALL BE NON-STOP WITH AUDIO DESCRIBING WHAT IS BEING REVIEWED. WRITTEN VIDEO LOGS DESCRIBING THE CONDITION OF THE LINES SHALL ACCOMPANY THE VIDEO SUBMISSION TO THE CITY PRIOR TO COMMENCING THE INSTALLATION OF ASPHALT OR CONCRETE PAVEMENT. THE CITY MAY REQUIRE ADDITIONAL VIDEO TAPING, VIDEO TAPING OF LATERALS, AND/OR INFILTRATION / EXFILTRATION TESTS IF DEFECTS ARE APPARENT ON WORKMANSHIP IS QUESTIONABLE.
22. ALL SEWER LINES WHICH ARE CONSTRUCTED OUTSIDE OF PUBLIC RIGHTS-OF-WAY WITHIN SIDE YARDS, BACKYARDS, AND OTHER POORLY ACCESSIBLE AREAS SHALL BE CONSTRUCTED OF GREEN C-900 PVC. ABSOLUTELY NO USE OF PLASTIC STYRENE FITTINGS SHALL BE ALLOWED.
23. SEWER LATERAL LOCATIONS SHALL BE MARKED ALONG THE OUTSIDE OF THE CURB WITH A SAW CUT "V", OR BY A METAL TAB SET INTO THE PAVEMENT.
24. EZ-WRAP PLASTIC, AS MANUFACTURED BY PRESS SEAL GASKET CORPORATION, SHALL BE USED ON THE OUTSIDE OF ALL MANHOLE AND WETWELL JOINTS. APPLY ONE LAYER OF 9" WRAP CENTERED ON EACH JOINT. A CITY INSPECTOR SHALL PERSONALLY INSPECT ALL JOINT SEALS PRIOR TO BACKFILLING OPERATIONS.

HOLLY HILL FLORIDA	CITY OF HOLLY HILL, FLORIDA STANDARD CONSTRUCTION DETAILS SANITARY SEWER CONSTRUCTION NOTES	DATE 02/2020 DETAIL NUMBER SS-2.2

SANITARY SEWER DESIGN NOTES (3 OF 4)

25. ALL PROPOSED SEWER FORCE MAINS SHALL BE FLUSHED, PRESSURE TESTED, PIGGED AND CLEARED FOR SERVICE IN ACCORDANCE WITH THE LATEST AWWA STANDARDS AND THE FLORIDA DEPARTMENT OF ENVIRONMENTAL PROTECTION REQUIREMENTS. THE CONTRACTOR SHALL NOTIFY THE CITY'S DESIGNATED SITE INSPECTOR WHO SHALL COORDINATE WITH CITY PERSONNEL AT THE WATER OR WASTEWATER TREATMENT PLANT (AS APPROPRIATE) AT LEAST 2 BUSINESS DAYS PRIOR TO BEGINNING A FULL-DIAMETER FLUSH OF THE MAINS AND PRIOR TO THE COMMENCEMENT OF PRESSURE TESTING (SUBJECT TO AVAILABILITY).
26. THE CONTRACTOR SHALL BE REQUIRED TO PIG ALL FORCE MAINS IN EXCESS OF 6" IN DIAMETER AND PRIMARY TRANSMISSION MAINS LOCATED ON COLLECTOR AND ARTERIAL ROADWAYS. LAUNCHING AND EXTRACTION POINTS SHALL BE DETERMINED BY THE CONTRACTOR. ALL PIGGING OPERATIONS SHALL BE WITNESSED BY A CITY REPRESENTATIVE OR INSPECTOR.
27. AS A GENERAL RULE, THE NUMBER OF JOINTS SHALL BE LIMITED WHENEVER POSSIBLE. IN SPECIAL CASES WHERE A POINT REPAIR TO AN 8"TO 12" PVC SEWER MAIN IS REQUIRED, THE PROPER RIGID WRAP AROUND SLEEVE SUCH AS A JCM-210 OVERSIZED DUCTILE IRON COUPLING OR AN APPROVED EQUAL MAY BE ALLOWED BY SPECIAL APPROVAL BY THE CITY.
28. ALL IN-LINE SANITARY SEWER FORCE MAIN VALVES SHALL BE RESILIENT SEAT (AWWA C-509 OR C-515) VALVES FEATURING AN EPOXY LINED DUCTILE IRON BODY.
29. ALL TAPPING OF PRESSURE MAINS AND CORING OF MANHOLES SHALL BE PERFORMED BY THE CITY AND BILLED IN ACCORDANCE WITH THE ADOPTED FEE RESOLUTION. SCHEDULING OF THESE CONNECTIONS SHALL REQUIRE A MINIMUM 2 BUSINESS DAYS NOTIFICATION DIRECTED TO THE CITY'S DESIGNATED SITE INSPECTOR WHO SHALL COORDINATE THE WORK DIRECTLY WITH THE PUBLIC WORKS DEPARTMENT. SUBSEQUENTLY, THE CONNECTION SHALL BE SCHEDULED TO COMMENCE BETWEEN 8:00 A.M. AND NOON ON THE APPROPRIATE DAY ESTABLISHED BY CITY, WITH RESPECT TO TIE-IN CONNECTIONS AND CORING OPERATIONS, THE CITY RESERVES THE RIGHT TO REQUIRE CONNECTIONS TO BE PERFORMED DURING PERIODS OF LOW FLOW (MIDNIGHT TO 8:00 A.M.) IN ORDER TO MINIMIZE SERVICE DISRUPTION TO EXISTING CUSTOMERS.
30. ALL WORK PERFORMED ON SANITARY SEWER FACILITIES OWNED OR PROPOSED TO BE OWNED BY THE CITY SHALL BE CONSTRUCTED BY AN UNDERGROUND UTILITY CONTRACTOR, OR LICENSED GENERAL CONTRACTOR, WHO IS LICENSED IN THE STATE OF FLORIDA AND REGISTERED WITH THE CITY.
31. UPON CONSTRUCTION COMPLETION AND ACCEPTANCE OF THE SYSTEM, IT SHALL BE THE DESIGN ENGINEER'S RESPONSIBILITY TO ENSURE THAT THE SYSTEM IS PROPERLY CERTIFIED AND ACCEPTED BY THE FLORIDA DEPARTMENT OF ENVIRONMENTAL PROTECTION AND AS-BUILTS ARE PROVIDED TO THE CITY PRIOR TO ANY USE OF THE SYSTEM.
32. FOR CONSTRUCTION PURPOSES, THE PLANS SHALL DIMENSION THE LOCATION, OF ALL FORCE MAINS MEASURED FROM THE BACK OF CURB (OR EDGE OF PAVEMENT, IF NO CURBING EXISTS).
33. ALL HDPE PIPE INSTALLED FOR SEWAGE FORCE MAINS SHALL BE SDR 11 WITH #10 COPPER HEAD TRACER WIRE UNLESS SPECIFICALLY NOTED OTHERWISE.THE HDPE PIPE SHALL BE SIZED TO MATCH THE EXTERNAL DIAMETER OF THE PVC TO WHICH IT IS ATTACHED.
34. ALL P.V.C. PIPE SHALL BE STORED IN SUCH A WAY AS TO PREVENT WARPING, DEFLECTION, OR DEFORMATION. ANY PIPE DEEMED TO BE MISSHAPED IN ANY WAY FOR ANY REASON SHALL BE REJECTED.
35. NO USED, RE-USED, RUSTED, SECOND HAND, OR ANY MATERIAL THAT IS NOT NEW SHALL BE USED IN ANY UTILITY IMPROVEMENT PROJECTS WITHIN THE CITY'S SERVICE AREA.

HOLLY HILL FLORIDA	CITY OF HOLLY HILL, FLORIDA STANDARD CONSTRUCTION DETAILS SANITARY SEWER CONSTRUCTION NOTES	DATE 02/2020 DETAIL NUMBER SS-2.3

SANITARY SEWER DESIGN NOTES (4 OF 4)

36. WHERE POTABLE WATER AND SANITARY SEWER MAINS CROSS WITH LESS THAN (18) INCHES OF VERTICAL CLEARANCE OR WHERE THE SEWER MAIN IS ABOVE THE WATER MAIN, THE SEWER MAIN SHALL BE ENCASED WITH CONCRETE OR ENCLOSED IN A WATER TIGHT CARRIER PIPE, OR PRESSURE RATED PVC PIPE (MEETING THE AWWA C-900 OR C-905 SPECIFICATION) FOR A MINIMUM LENGTH OF (20) FEET, CENTERED ON THE POINT OF CROSSING. A MINIMUM HORIZONTAL SEPARATION OF (10) FEET (EDGE TO EDGE) BETWEEN POTABLE WATER MAINS AND SEWER MAINS SHALL BE MAINTAINED WHEN AT ALL POSSIBLE. WHEN THE 10-FOOT HORIZONTAL SEPARATION CANNOT BE MAINTAINED THE WATER MAIN SHALL BE INSTALLED IN A SEPARATE TRENCH OR ON AN UNDISTURBED EARTH SHELF AT LEAST 18" ABOVE THE SEWAGE MAIN. ALTERNATIVELY, THE SEWER MAIN SHALL BE ENCASED WITH CONCRETE OR ENCLOSED IN A WATER TIGHT CARRIER PIPE, OR UPGRADED TO PRESSURE RATED PVC PIPE (MEETING AWWA C-900 OR C-905 SPECIFICATION) AND PRESSURE TESTED AT 150 PSI TO ASSURE WATER TIGHTNESS PRIOR TO BACKFILLING.
37. CEMENT USED IN CONCRETE MIX FOR PRECAST STRUCTURES SHALL BE TYPE II, ACID RESISTANT AND SULFIDE RESISTANT CONCRETE.
38. MORTAR TO CONTAIN "HYDRATITE" OR APPROVED EQUAL, TO PREVENT SHRINKAGE
39. CONTRACTORS SHALL PROVIDE THICKER MANHOLE WALLS AND BASES AS REQUIRED TO PREVENT FLOTATION BASED ON HIGH GROUND WATER TABLE ELEVATIONS AS DETERMINED USING ACCEPTED ENGINEERING PRACTICES AND/OR APPROVED BY PUBLIC WORKS DEPT.
40. SHOP DRAWINGS FOR ALL STRUCTURES SHALL BE SUBMITTED TO AND APPROVED BY THE DESIGN ENGINEER PRIOR TO INSTALLATION WITH TWO COPIES FORWARDED BY THE DESIGN ENGINEER TO THE CITY.
41. NO BUG HOLES OR HONEYCOMB WILL BE ACCEPTED.
42. ALL SANITARY SEWER MANHOLES SHALL HAVE ALL INTERIOR SURFACES COATED WITH THREE (3) COATS OF WHITE/GRAY OVER RED OVER BLACK EW-1 EPOXY PAINT WITH A TOTAL OF 12 MILS THICKNESS ON BLACK COAL-TAR EPOXY WITH A TOTAL OF 16 MILS THICKNESS. OUTSIDE SURFACE TO BE COATED WITH TWO (2) COATS OF BLACK OVER BLACK EW-1 EPOXY PAINT WITH A TOTAL OF 8 MILS AND ONE (1) COAT OF BLACK COAL-TAR EPOXY WITH A TOTAL OF 8 MILS. ALL COATS SHALL BE APPLIED AT THE FACTORY EXCEPT MINOR FIELD TOUCH UP AT JOINTS AND AT MANHOLE NECK.

HOLLY HILL FLORIDA	CITY OF HOLLY HILL, FLORIDA STANDARD CONSTRUCTION DETAILS SANITARY SEWER CONSTRUCTION NOTES	DATE 02/2020 DETAIL NUMBER SS-2.4

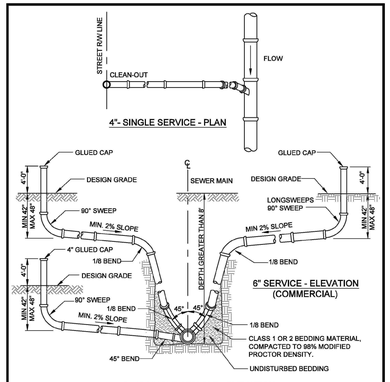

4"- SINGLE SERVICE - PLAN

6" SERVICE - ELEVATION (COMMERCIAL)

4" - 6" SINGLE SERVICE - ELEVATION

NOTES:
1. USE OF STYRENE MATERIAL WILL NOT BE PERMITTED.
2. ALL JOINTS TO BE RUBBER GASKET (NO GLUED FITTINGS) TYPICAL.
3. USE ALL HARCO SDR-26 FITTINGS OR CITY APPROVED EQUAL.
4. APPROVED EQUAL IS MULTI FITTINGS 8"x6" OR 8"x4" T-WYE AND 8"x6" OR 8"x4" WYE WITH A DATE STAMP.

4" - RESIDENTIAL
6" - COMMERCIAL

HOLLY HILL FLORIDA	CITY OF HOLLY HILL, FLORIDA STANDARD CONSTRUCTION DETAILS SANITARY SEWER SERVICE LATERAL	DATE 02/2020 DETAIL NUMBER SS-12

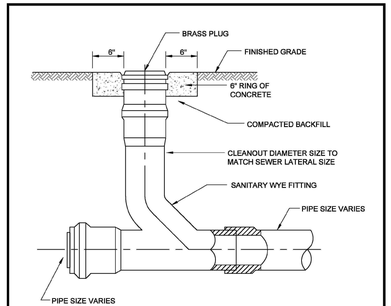

NOTE:
1. CLEANOUT SIZE SHOULD ALWAYS MATCH MAIN LINE SIZE TO ALLOW FOR PROPER CLEANING

HOLLY HILL FLORIDA	CITY OF HOLLY HILL, FLORIDA STANDARD CONSTRUCTION DETAILS SANITARY SEWER CLEANOUT	DATE 02/2020 DETAIL NUMBER SS-13

STORM DRAINAGE DESIGN AND CONSTRUCTION NOTES (1 OF 2)

ALL MATERIALS AND INSTALLATION METHODS USED FOR LAND DEVELOPMENT CODE REQUIRED IMPROVEMENTS FOR SUBDIVISIONS AND SITE PLANS SHALL BE IN CONFORMANCE WITH THE CITY, FDOT STANDARD SPECIFICATIONS FOR ROAD AND BRIDGE CONSTRUCTION (LATEST EDITION), AND THE FDOT STANDARDS PLANS (LATEST EDITION).

1. ALL STORM SEWERS AND CULVERTS LOCATED IN ROADWAY RIGHTS-OF-WAY AND ROADWAY EASEMENTS SHALL BE A MINIMUM OF CLASS III REINFORCED CONCRETE PIPE. OUTSIDE OF ROADWAY EASEMENTS AND R.O.W., PIPE MAY BE MADE OF ALTERNATE MATERIALS INCLUDING:
   A. SMOOTH INNER WALL HIGH DENSITY POLYETHYLENE (HDPE) IN ACCORDANCE WITH AASHTO M-294, AASHTO MP7, ASTM D3350 AND ASTM D2412 FOR SIZES UP TO 42" IN DIAMETER
   B. PVC IN ACCORDANCE WITH THE PROVISION NOTED IN THE "SEWER DETAILS" OF THESE SPECIFICATIONS.
2. ALL STORM SEWER PIPE JOINTS LOCATED IN ROADWAY RIGHTS-OF-WAY AND ROADWAY EASEMENTS SHALL BE ENTIRELY WRAPPED WITH FILTER FABRIC WITH A MINIMUM WIDTH OF 24" AND A MINIMUM OF 24" OVERLAP SECURED WITH PLASTIC OR STAINLESS BANDS. GASKETS ARE NOT PERMITTED AS AN EQUIVALENT SUBSTITUTE FOR MEETING THIS REQUIREMENT. THIS PRACTICE IS ENCOURAGED ON PRIVATE SITES ADDITIONALLY, ALL JOINTS SHALL BE RUBBER GASKETED FOR BOTH ROUND AND ELLIPTICAL PIPE.
3. DEPTH OF COVER MEASURED TO THE TOP OF PIPE (NOT INCLUDING THE BELL JOINT) SHALL BE A MINIMUM OF 1 FOOT. DEVIATION FROM THIS REQUIREMENT MAY BE ALLOWED BY INCREASING THE PIPE'S STRUCTURAL CAPACITY. THIS DEVIATION MUST BE SPECIFIED ON THE PLANS APPROVED FOR CONSTRUCTION AND SUBSEQUENTLY REFLECTED ON THE SHOP DRAWINGS AND AS-BUILT PLANS.
4. ALL STORM DRAINAGE PIPES LOCATED IN ROADWAY RIGHTS-OF-WAY AND ROADWAY EASEMENTS SHALL BE A MINIMUM OF FIFTEEN INCH (15") DIAMETER OR EQUIVALENT AND BE DESIGNED FOR A MINIMUM OF A TWENTY-FIVE (25) YEAR STORM OF TWENTY-FOUR (24) HOUR DURATION. STORM DRAINAGE PIPES SMALLER THAN 15" ARE PERMITTED ON PRIVATE SITE PLANS PROVIDING THAT MAINTENANCE SHALL BE PERFORMED BY THE OWNER.
5. STORM INLETS, MANHOLES, AND CATCH BASINS SHALL BE EITHER POURED IN PLACE OR PRECAST REINFORCED CONCRETE. STRUCTURES SHALL BE REQUIRED AT EACH CHANGE OF PIPE SIZE OR CHANGE IN PIPE DIRECTION. ALL STRUCTURES SHALL BE IN COMPLIANCE WITH ASTM C-478 AND SHALL HAVE 8" THICK WALLS. 6" THICK WALLS MAY BE PERMITTED PROVIDING THAT THE PLANS SPECIFY INCREASED REINFORCEMENT IN ACCORDANCE WITH FDOT STANDARD PLANS (LATEST EDITION). IN ADDITION, THIS REQUIREMENT MUST BE REFLECTED ON BOTH THE SHOP DRAWING AND AS-BUILT PLANS.
6. STORM INLETS SHALL BE SPACED IN SUCH A MANNER AS TO ACCEPT ONE HUNDRED 6. (100) PERCENT OF THE DESIGN STORM RUNOFF WITHOUT IMPEDING THE FLOW OF TRAFFIC. FOR ROADWAY SECTIONS WITH DESIGN SPEEDS OF 45 MPH AND LESS AND WITHOUT FULL WIDTH SHOULDERS, SPREAD RESULTING FROM A RAINFALL INTENSITY OF FOUR INCHES (4") PER HOUR SHALL NOT EXCEED ONE-HALF OF THE TRAVEL LANE ADJACENT TO THE GUTTER. FOR SITE PLANS, INLET SPACING SHALL BE DESIGNED TO ACCEPT ONE HUNDRED (100) PERCENT OF THE RUNOFF FROM A RAINFALL INTENSITY OF FOUR INCHES (4") PER HOUR WITHOUT RESULTING IN PONDING OF WATER AROUND THE INLET.
7. RETENTION AREA WATER DEPTHS SHALL BE FOUR FEET(4') MINIMUM TO TWELVE FEET(12') MAXIMUM, MEASURED FROM THE N.W.L. (NORMAL WATER LEVEL).
8. FOR CONNECTIONS BETWEEN INLETS WITH PIPING 15" IN DIAMETER AND LARGER, THE MAXIMUM DISTANCES BETWEEN INLETS AND / OR CLEAN-OUT JUNCTION BOXES SHALL BE 300 FEET. CULVERTS SHALL BE SLOPED TO MAINTAIN A MINIMUM SELF-CLEANING VELOCITY OF 3 FEET PER SECOND USING A MANNING'S 'n' OF 0.012. SPACING FOR CLEAN-OUTS AND INLETS FOR SMALLER PIPING SHALL BE REDUCED AND EVALUATED ON A CASE BY CASE BASIS.

HOLLY HILL FLORIDA	CITY OF HOLLY HILL, FLORIDA STANDARD CONSTRUCTION DETAILS STORM DRAINAGE DESIGN AND CONSTRUCTION NOTES	DATE 02/2020 DETAIL NUMBER ST-4.1

STORM DRAINAGE DESIGN AND CONSTRUCTION NOTES (2 OF 2)

9. THE MAXIMUM PERMISSIBLE SLOPE OF ANY NEW SITE GRADING IS 3:1 HORIZONTAL:VERTICAL). THIS LIMIT SHALL BE APPLIED TO ALL AREAS EXCEPT STORMWATER CONVEYANCE AND TREATMENT SYSTEMS WHICH HAVE A MAXIMUM SLOPE OF 4:1 (EXCEPT BELOW THE WATER TABLE WHERE SHARPER SLOPES ARE PERMISSIBLE).
10. PIPED STORMWATER SYSTEMS SHALL HAVE A MINIMUM DRAINAGE MAINTENANCE EASEMENT WIDTH OF 20 FEET, AND MAY BE INCREASED DEPENDING UPON THE SIZE AND DEPTH OF PIPE.
11. NORMAL ROADSIDE SWALES ARE PERMITTED TO BE CONSTRUCTED TO A MAXIMUM DEPTH OF 18" BELOW THE OUTSIDE EDGE OF PAVEMENT OR CONCRETE CURB.
12. CONCRETE EROSION CONTROL MUST BE PROVIDED WHERE SWALES OR CULVERTS INTERCEPT DRAINAGE DITCHES.
13. LAKE INFLOW AND OUTLET STRUCTURES SHALL GENERALLY BE CONSTRUCTED WITH REINFORCED CONCRETE AND SHALL BE SUBJECT TO THE APPROVAL OF THE CITY. SKIMMERS FOR WET PONDS SHALL BE CONSTRUCTED SUCH THAT THE BOTTOM EXTENDS 6" BELOW THE NORMAL WATER LEVEL AND 6" ABOVE THE OVERFLOW. FOR DRY PONDS, THE SKIMMER BOTTOM SHALL BE SET 6" BELOW THE LOWEST OVERFLOW ELEVATION AND 6" ABOVE THE HIGHEST POINT OF OVERFLOW. ALL SKIMMERS SHALL BE CONSTRUCTED OF MINIMUM 1/4" THICK ALUMINUM OR FIBERGLASS ADEQUATELY SUPPORTED TO PREVENT DEFLECTION.
14. SOIL EROSION CONTROL MEASURES, SATISFACTORY TO THE ST. JOHNS RIVER WATER MANAGEMENT DISTRICT AND THE CITY, SHALL BE EMPLOYED DURING CONSTRUCTION.
15. THE CITY MAY REQUEST THAT THE DEVELOPER SUBMIT A REPORT BY A QUALIFIED HYDROLOGIST ON THE IMPACT THE LAKE WILL HAVE ON NEIGHBORING WATER TABLE ELEVATIONS BOTH DURING CONSTRUCTION AND AFTER LAKE COMPLETION. THE CITY MAY REQUIRE GROUNDWATER MONITORING DURING THE LAKE EXCAVATION.
16. ADEQUATE MAINTENANCE EASEMENTS OR RIGHTS-OF-WAY AS APPROVED BY THE CITY SHALL BE PROVIDED AROUND THE ENTIRE PERIMETER OF ALL LAKES AND ASSOCIATED OUTFALLS DISCHARGING INTO AND OUT OF LAKES. APPLICABLE CROSS SECTIONS SHALL BE INCLUDED ON FINAL DEVELOPMENT PLANS.
17. DEVELOPMENT PLANS FOR ALL STORMWATER MANAGEMENT SYSTEMS SHALL CONTAIN POP-OFF DATA (OVERFLOW), BOTTOM ELEVATION, NORMAL WATER LEVELS, MEAN ANNUAL SEASONAL HIGH WATER TABLE ELEVATION, TREATMENT VOLUME AND CORRESPONDING ELEVATION, 100 YEAR HIGH WATER LEVELS, AND THE DESIGN TAILWATER ELEVATION (IF APPLICABLE).
18. IN GENERAL, ALL RETENTION / DETENTION SITES MUST BE CONSTRUCTED ON ALL PROJECTS PRIOR TO ANY ROAD, PARKING LOT, OR BUILDING CONSTRUCTION COMMENCING OR AS CURRENT PERMIT CONDITIONS DICTATE. SEWER AND WATER MAINS MAY BE INSTALLED PRIOR

POTABLE WATER CONSTRUCTION NOTES (1 OF 4)

1. THE CITY'S PUBLIC WORKS DEPARTMENT SHALL BE GIVEN A MINIMUM OF 5 BUSINESS DAYS ADVANCE NOTICE (NOT INCLUDING HOLIDAYS OR WEEKENDS) PRIOR TO BEGINNING ANY POTABLE WATER SYSTEM CONSTRUCTION.
2. DEWATERING SHALL BE PROVIDED TO KEEP GROUNDWATER ELEVATION A MINIMUM OF 6 INCHES BELOW WATER MAIN BEING LAID.
3. ALL WATER MAINS SHALL BE LAID ON A FIRM FOUNDATION WITH ALL UNSUITABLE MATERIAL (MUCK, ROCK, COQUINA, ETC.) REMOVED AND REPLACED WITH CLEAN GRANULAR MATERIAL.
4. TRENCHES SHALL BE BACKFILLED WITH MATERIAL ACCEPTABLE TO THE CITY WITH A MINIMUM COMPACTION OF 98% IN PAVED AREAS AND 95% IN UNPAVED AREAS IN ACCORDANCE WITH AASHTO T-180.
5. IT SHALL BE THE CONTRACTORS RESPONSIBILITY TO ENSURE THAT TRENCH COMPACTION TESTS BE PROVIDED AT POINTS 1 FOOT ABOVE THE PIPE AND AT 1 FOOT VERTICAL INTERVALS TO FINISH GRADE, AT A MINIMUM SPACING OF EVERY 300 FEET.
6. 3" METALIZED PIPE LOCATION TAPE SHALL BE LOCATED BETWEEN 15" AND 24" BELOW FINISHED GRADE OR AS SPECIFIED BY MANUFACTURER FOR ALL PVC LINES. MARKER TAPE SHALL BE USED ON ALL DUCTILE IRON PIPE, AND TRACER WIRE, AS WELL.
7. ALL WATER SERVICE ENDINGS SHALL BE MARKED WITH A 2"x4" LUMBER (PRESSURE TREATED) EXTENDING 4 FEET ABOVE GRADE, WITH WATER SERVICES SECURED 12" MAXIMUM ABOVE THE GROUND. ALL SERVICES SHALL BE LOCKED AT THE TIME OF FINAL INSPECTION BY THE CONTRACTOR IN THE PRESENCE OF THE CITY INSPECTOR OR CITY PERSONNEL, AFTER THEY HAVE BEEN INSPECTED AND VERIFIED TO OPERATE PROPERLY.
8. AT ALL WATER MAIN TEES AND CROSSES, VALVES SHALL BE INSTALLED ON ALL LEGS EXCEPT ONE.
9. ALL WATER VALVES SHALL BE ADJUSTED TO FINISHED GRADE AND THE CAPS PAINTED BLUE TO MAKE THEM PLAINLY VISIBLE.
10. UPON FINAL ACCEPTANCE OF NEW WATER SYSTEMS, WATER VALVES SHALL BE COMPLETELY OPENED BY PUBLIC WORKS PERSONNEL. AT NO TIME SHALL CONTRACTOR OPERATE ANY EXISTING VALVES.
11. ALL FIRE HYDRANTS SHALL BE CONSTRUCTED TO MAKE THEM EASILY ACCESSIBLE TO FIRE PERSONNEL, IN CASE OF A FIRE. THE PRIMARY HYDRANT PORT SHOULD ALWAYS FACE THE STREET.
12. AS STANDARD PRACTICE, WATER MAINS SHALL BE INSTALLED 4 FEET OFF THE BACK OF CURB OR AS APPROVED BY THE CITY, WITHIN CITY RIGHT OF WAY.
13. ALL WATER MAINS SHALL BE NSF AND/OR AWWA APPROVED FOR POTABLE WATER USE, AND SHALL HAVE A MINIMUM COVER OF 36 INCHES (3.0 FEET) AND A MAXIMUM DEPTH OF 48 INCHES (4.0 FEET) FROM FINAL GRADE EXCEPT AT LOCATIONS OF UTILITY CROSSINGS OR WITH SPECIAL APPROVAL WHEN IT IS DETERMINED TO BE IN THE BEST INTEREST OF THE CITY.
14. WATER MAINS SHALL BE C-900 PVC OR C-905 CL 150 (COLOR"BLUE") OR DIP PRESSURE CLASS 350 STANDARD CEMENT LINED UNLESS OTHERWISE APPROVED BY THE CITY. TRACER WIRE TO BE INCLUDED.
15. UPON CONSTRUCTION COMPLETION AND ACCEPTANCE OF THE SYSTEM, IT SHALL BE THE DESIGN ENGINEER'S RESPONSIBILITY TO ENSURE THAT THE SYSTEM IS PROPERLY CERTIFIED AND ACCEPTED BY THE DEPARTMENT OF HEALTH AND AS-BUILTS ARE PROVIDED TO THE CITY PRIOR TO ANY PUBLIC USE OF THIS SYSTEM.

HOLLY HILL FLORIDA	CITY OF HOLLY HILL, FLORIDA STANDARD CONSTRUCTION DETAILS	DATE 02/2020
	POTABLE WATER CONSTRUCTION NOTES	DETAIL NUMBER PW-2.1

POTABLE WATER CONSTRUCTION NOTES (2 OF 4)

16. IN AREAS WHERE RECLAIMED WATER IS NOT AVAILABLE THE CONTRACTOR SHALL BE REQUIRED TO (UPON SATISFACTORY COMPLETION OF THE PRESSURE TEST) TRANSFER THE WATER FROM THE POTABLE WATER LINES TO THE RECLAIMED WATER LINES FOR UTILIZATION IN THEIR PRESSURE TEST. BACKFLOW PREVENTION SHALL BE REQUIRED.
17. DUCTILE IRON PIPE RESEARCH ASSOCIATION (DIPRA) GUIDELINES. IN THE EVENT THAT PVC PIPE IS SPECIFIED, THE RESTRAINT JOINT SHALL BE MODIFIED IN ACCORDANCE WITH THE RECOMMENDED ADDITIONAL RESTRAINT LENGTH REQUIRED FOR PIPE WRAPPED WITH POLYETHYLENE.
18. DEAD END MAINS SHALL HAVE A FLUSHING DEVICE (MINIMUM 2") LOCATED IN A METER VAULT AT END OF MAIN.
19. MEGALUGS, BOLTLESS RESTRAINED JOINTS OR GRIPPER GASKETS SHALL BE USED ON ALL RESTRAINED JOINT INSTALLATIONS. MINIMUM DEPTH OF BURY ON PIPES NOT MEETING REQUIRED COVER REQUIREMENTS SHALL FOLLOW THE MOST RECENT DIPRA THRUST RESTRAINT DESIGN GUIDELINES USING TORQUE WRENCHES PER MANUFACTURERS RECOMMENDATION.
20. WATER SYSTEMS SHALL BE PRESSURE TESTED AT 150 PSI STATIC PRESSURE FOR A PERIOD OF 2 HOURS PER AWWA STANDARDS.
21. ALL WATER SERVICES SHALL BE MARKED WITH AN "I" SAW CUT INTO THE CURB OR BY METAL TABS SET INTO THE PAVEMENT.
22. ALL WATER VALVES SHALL BE MARKED WITH AN "X" SAW CUT INTO THE CURB OR BY METAL TABS SET INTO THE PAVEMENT. BLOW-OFFS SHALL BE MARKED SIMILARLY, AS WELL. REVERSE TAPPING VALVE SHALL BE MARKED WITH AN "X 1" SAW CUT INTO THE CURB OR PAVEMENT WITH THE ARROW POINTING TO THE DIRECTION OF THE PRESSURE MAIN RUN.
23. ALL TAPPING OF MAINS SHALL BE PERFORMED BY THE CONTRACTOR AND WITNESSED BY THE CITY AND BILLED IN ACCORDANCE WITH THE ADOPTED FEE RESOLUTION. SCHEDULING OF THESE CONNECTIONS OR TAPPINGS SHALL REQUIRE A MINIMUM OF 5 BUSINESS DAYS, DIRECTED TO THE CITY'S DESIGNATED SITE INSPECTOR WHO SHALL COORDINATE THE WORK DIRECTLY WITH THE PUBLIC WORKS DEPARTMENT. SUBSEQUENTLY, THE CONNECTION SHALL BE SCHEDULED TO COMMENCE BETWEEN 8:00 A.M. AND NOON ON THE APPROPRIATE DAY.
24. LARGE COMMERCIAL WATER AND RECLAIMED WATER METERS GREATER THAN 3" TAKE A MINIMUM OF 6 WEEKS FOR DELIVERY AFTER FEES ARE PAID TO THE CITY. IN ADDITION ALL METERS AND VAULTS 3" AND GREATER SHALL BE INSTALLED BY THE OWNER/ DEVELOPER/ CONTRACTOR. THE FEE COLLECTED BY THE CITY IS FOR MATERIALS ONLY. ALL METERS, 2" AND LESS, SHALL BE INSTALLED BY THE CITY.
25. THE CITY REQUIRES DOUBLE WATER SERVICE INSTALLATIONS WHEREVER FEASIBLE. WHEN DESIGN CONFLICTS EXIST, SINGLE WATER SERVICES MAY BE ALLOWED. THIS MAY APPLY AT STORMWATER INLETS, FIRE HYDRANTS, FPL TRANSFORMERS, ETC. AND OTHER LOCATIONS DEEMED APPROPRIATE BY THE CITY.
26. ALL PROPOSED POTABLE WATER MAINS SHALL BE FLUSHED, DISINFECTED, PRESSURE TESTED AND BACTERIOLOGICALLY CLEARED FOR SERVICE WHEN APPROPRIATE IN ACCORDANCE WITH THE LATEST AWWA STANDARDS AND THE FLORIDA DEPARTMENT OF ENVIRONMENTAL PROTECTION REQUIREMENTS. THE CONTRACTOR SHALL NOTIFY THE CITY'S DESIGNATED SITE INSPECTOR WHO SHALL COORDINATE WITH CITY PERSONNEL AT THE WATER TREATMENT PLANT AT LEAST 2 BUSINESS DAYS PRIOR TO BEGINNING FLUSH OF THE MAINS AND PRIOR TO THE COMMENCEMENT OF PRESSURE TESTING.

HOLLY HILL FLORIDA	CITY OF HOLLY HILL, FLORIDA STANDARD CONSTRUCTION DETAILS	DATE 02/2020
	POTABLE WATER CONSTRUCTION NOTES	DETAIL NUMBER PW-2.2

POTABLE WATER CONSTRUCTION NOTES (3 OF 4)

27. THE CONTRACTOR SHALL BE REQUIRED TO PIG ALL POTABLE MAINS 8" AND LARGER IN DIAMETER AND PRIMARY DISTRIBUTION MAINS LOCATED ON COLLECTOR AND ARTERIAL ROADWAYS. ALL PIGS SHALL BE NEW. NO FOAM PIGS ARE ALLOWED. LAUNCHING AND EXTRACTION POINTS SHALL BE DETERMINED BY THE CONTRACTOR. ALL PIGGING OPERATIONS SHALL BE WITNESSED BY A PUBLIC WORKS REPRESENTATIVE OR A CITY UTILITY INSPECTOR.
28. WITH RESPECT TO TIE-IN CONNECTIONS, THE CITY RESERVES THE RIGHT TO REQUIRE CONNECTIONS TO BE PERFORMED DURING PERIODS OF LOW FLOW (MIDNIGHT TO 6:00 A.M.) IN ORDER TO MINIMIZE SERVICE DISRUPTION TO EXISTING CUSTOMERS. THE INSTALLATION OF LINE STOPPING DEVICES ON PRESSURE MAIN (POTABLE WATER AND FORCE MAIN) MAY BE REQUIRED ON ANY REQUESTED UTILITY OUTAGE AT THE DISCRETION OF PUBLIC WORKS DEPARTMENT TO MINIMIZE INTERRUPTION TO EXISTING UTILITY CUSTOMERS.
29. THE PHYSICAL TAKING OF EACH AND EVERY WATER SAMPLE FOR BACTERIOLOGICAL TESTING SHALL BE OBSERVED BY THE CITY'S DESIGNATED SITE INSPECTOR. THIS SHOULD NOT IMPACT THE PROJECT SINCE THE CONTRACTOR MUST ALREADY COORDINATE FLUSHING ACTIVITY WITH THE INSPECTOR. ALL SAMPLE FORMS SHALL BE COMPLETELY FILLED OUT BY THE SAMPLING COMPANY AND TESTING COMPANY IN ORDER TO BE ACCEPTED. WHEN THE PUBLIC WORKS OFFICE RECEIVES POTABLE WATER CLEARANCE REQUEST REQUIRING SIGNATURE THE CITY'S DISTRIBUTION SUPERVISOR AND/OR DESIGNATED SITE INSPECTOR WILL BE CONTACTED TO INDEPENDENTLY VERIFY THAT THE SYSTEM IS IN PROPERLY FUNCTIONING ORDER (I.E. ALL VALVES, HYDRANTS, AND WATER SERVICES ARE ACCESSIBLE AND OPERABLE). SIMULTANEOUSLY, THE CITY MAY ALSO TAKE A RANDOM BACTERIOLOGICAL SAMPLE WITHIN THE NEW SYSTEM TO VERIFY THAT WATER IS SAFE FOR CONSUMPTION. ONCE THE DISTRIBUTION SUPERVISOR AND/OR DESIGNATED SITE INSPECTOR HAVE VERIFIED THAT THE SYSTEM IS IN PROPER FUNCTIONING ORDER AND THAT THE BACTERIOLOGICAL SAMPLE INDICATES THE WATER IS SAFE FOR CONSUMPTION, THE PUBLIC WORKS OFFICE WILL THEN SIGN OFF ON THE WATER CLEARANCE REQUEST.
30. ALL WORK PERFORMED ON THE POTABLE WATER FACILITIES OWNED OR PROPOSED TO BE OWNED BY THE CITY SHALL BE CONSTRUCTED BY A STATE CERTIFIED UNDERGROUND UTILITY CONTRACTOR OR GENERAL CONTRACTOR LICENSED IN THE STATE OF FLORIDA AND REGISTERED WITH THE CITY.
31. FOR CONSTRUCTION PURPOSES, THE PLANS SHALL DIMENSION THE PROPOSED LOCATIONS OF ALL WATER MAINS MEASURED FROM THE BACK OF CURB (OR EDGE OF PAVEMENT, IF NO CURB IS USED).
32. NEWLY CONSTRUCTED POTABLE WATER SYSTEM EXTENSIONS MAY NOT BE USED PRIOR TO FINAL TESTING, CLEARANCE AND ACCEPTANCE BY THE CITY. THIS INCLUDES CONSTRUCTION WATER REQUIRED FOR SEWER LINE CLEANING OR RELATED USES. BACKFLOW PREVENTION SHALL BE REQUIRED.
33. FIRE HYDRANTS MAY NOT BE INSTALLED WITHIN 20' OF ANY ELECTRICAL TRANSFORMER
34. ALL H.D.P.E. PIPE UTILIZED FOR WATER, FORCE MAIN AND/OR RATALIMED WATER MAIN EXTENSIONS SHALL BE S.D.R. 11 WITH #10 COPPERHEAD TRACER WIRE UNLESS SPECIFICALLY NOTED OTHERWISE. THE HDPE PIPE SHALL BE SIZED TO MATCH THE EXTERNAL DIAMETER OF THE PVC OR DIP PIPE TO WHICH IT IS ATTACHED.
35. ALL VALVES 2" AND LARGER SHALL BE STANDARD 2" RESILIENT SEATED GATE VALVES (CORP STOPS ARE NOT ACCEPTABLE). AMERICAN FLOW CONTROL VALVES ARE PREFERRED.
36. ALL PVC PIPE SHALL BE STORED IN SUCH A WAY AS TO PREVENT WARPING, DEFLECTION, OR DEFORMATION. FITTINGS SHALL BE P.V.C. AND MANUFACTURED OF THE SAME DESIGN AS THE PVC PIPE.

HOLLY HILL FLORIDA	CITY OF HOLLY HILL, FLORIDA STANDARD CONSTRUCTION DETAILS	DATE 02/2020
	POTABLE WATER CONSTRUCTION NOTES	DETAIL NUMBER PW-2.3

POTABLE WATER CONSTRUCTION NOTES (4 OF 4)

37. PVC FITTINGS 4-INCH THROUGH 36-INCH SHALL BE P.V.C. (OR D.I.P. WITH PROTECTO 401) INJECTION-MOLDED OR FABRICATED AS SPECIFIED, MADE OF MATERIALS MEETING OR EXCEEDING THE REQUIREMENTS OF CELL CLASS 12454-B MATERIAL AS DEFINED IN ASTM D1784. FABRICATED FITTINGS SHALL BE MANUFACTURED WITH PIPE THAT MEETS OR EXCEEDS AWWA C-905 STANDARD, AND SHALL BE FIBERGLASS REINFORCED TO A PRESSURE RATING OF 165 PSI. ALL P.V.C. OR MECHANICAL JOINT FITTINGS MUST COMPLY WITH OR EXCEED ANSI/AWWA C907, UNI-B-14 STANDARDS AS THEY APPLY TO THE APPROPRIATE SIZE RANGE AND METHOD OF MANUFACTURE.
38. NO USED, RE-USED, RUSTED, SECOND HAND, OR ANY MATERIAL THAT IS NOT NEW SHALL BE USED IN ANY UTILITY IMPROVEMENT PROJECTS WITHIN THE CITY'S SERVICE AREA.
39. NEW OR RELOCATED, UNDERGROUND WATER MAINS SHALL BE LAID TO PROVIDE A HORIZONTAL DISTANCE OF AT LEAST THREE FEET BETWEEN THE OUTSIDE OF THE WATER MAIN AND THE OUTSIDE OF ANY EXISTING OR PROPOSED STORM SEWER, STORMWATER FORCE MAIN, OR PIPELINE CONVEYING RECLAIMED WATER REGULATED UNDER PART III OF CHAPTER 62-610, F.A.C.
40. NEW OR RELOCATED, UNDERGROUND WATER MAINS SHALL BE LAID TO PROVIDE A HORIZONTAL DISTANCE OF AT LEAST SIX FEET, AND PREFERABLY TEN FEET, BETWEEN THE OUTSIDE OF ANY EXISTING OR PROPOSED VACUUM-TYPE SANITARY SEWER.
41. NEW OR RELOCATED, UNDERGROUND WATER MAINS SHALL BE LAID TO PROVIDE A HORIZONTAL DISTANCE OF AT LEAST SIX FEET, AND PREFERABLY TEN FEET, BETWEEN THE OUTSIDE OF THE WATER MAIN AND THE OUTSIDE OF ANY EXISTING OR PROPOSED GRAVITY OR PRESSURE-TYPE SANITARY SEWER, WASTEWATER FORCE MAIN, OR PIPELINE CONVEYING RECLAIMED WATER NOT REGULATED UNDER PART III OF CHAPTER 62-610 F.A.C. THE MINIMUM HORIZONTAL SEPARATION DISTANCE BETWEEN WATER MAINS AND GRAVITY-TYPE SANITARY SEWERS SHALL BE REDUCED TO THREE FEET WHERE THE BOTTOM OF THE WATER MAIN IS LAID AT LEAST SIX INCHES ABOVE THE TOP OF THE SEWER.
42. NEW OR RELOCATED, UNDERGROUND WATER MAINS CROSSING ANY EXISTING OR PROPOSED GRAVITY- OR VACUUM-TYPE SANITARY SEWER OR STORM SEWER SHALL BE LAID SO THE OUTSIDE OF THE WATER MAIN IS AT LEAST SIX INCHES, AND PREFERABLY 12 INCHES, ABOVE OR AT LEAST 12 INCHES BELOW THE OUTSIDE OF THE OTHER PIPELINE. HOWEVER, IT IS PREFERABLE TO LAY THE WATER MAIN ABOVE THE OTHER PIPELINE.
43. NEW OR RELOCATED, UNDERGROUND WATER MAINS CROSSING ANY EXISTING OR PROPOSED PRESSURE TYPE SANITARY SEWER, WASTEWATER OR STORMWATER FORCE MAIN, OR PIPELINE CONVEYING RECLAIMED WATER SHALL BE LAID SO THE OUTSIDE OF THE WATER MAIN IS AT LEAST 12 INCHES ABOVE OR BELOW THE OUTSIDE OF THE OTHER PIPELINE. HOWEVER, IT IS PREFERABLE TO LAY THE WATER MAIN ABOVE THE OTHER PIPELINE.
44. AT THE UTILITY CROSSINGS, ONE FULL LENGTH OF WATER MAIN PIPE SHALL BE CENTERED ABOVE OR BELOW THE OTHER PIPELINE SO THE WATER MAIN JOINTS WILL BE AS FAR AS POSSIBLE FROM THE OTHER PIPELINE. ALTERNATIVELY, AT SUCH CROSSINGS, THE PIPES SHALL BE ARRANGED SO THAT ALL WATER MAIN JOINTS ARE AT LEAST THREE FEET FROM ALL JOINTS IN VACUUM-TYPE SANITARY SEWERS, STORM SEWERS, STORMWATER FORCE MAINS OR PIPELINES CONVEYING RECLAIMED WATER REGULATED UNDER PART III OF CHAPTER 62-610 F.A.C. AND AT LEAST SIX FEET FROM ALL JOINTS IN GRAVITY- OR PRESSURE-TYPE SANITARY SEWERS, WASTEWATER FORCE MAINS. OR PIPELINES CONVEYING RECLAIMED WATER NOT REGULATED UNDER PART III OF CHAPTER 62-610, F.A.C.
45. WATER MAINS SHALL BE C-900 PVC OR C-905 CL 150 (COLOR"BLUE") OR DIP PRESSURE CLASS 350 STANDARD CEMENT LINED UNLESS OTHERWISE APPROVED BY THE CITY.

HOLLY HILL FLORIDA	CITY OF HOLLY HILL, FLORIDA STANDARD CONSTRUCTION DETAILS	DATE 02/2020
	POTABLE WATER CONSTRUCTION NOTES	DETAIL NUMBER PW-2.4

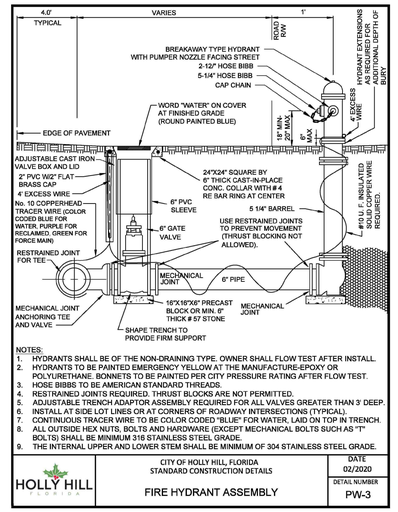

NOTES:
1. HYDRANTS SHALL BE OF THE NON-DRAINING TYPE. OWNER SHALL FLOW TEST AFTER INSTALL.
2. HYDRANTS TO BE PAINTED EMERGENCY YELLOW AT THE MANUFACTURE-EPOXY OR POLYURETHANE. BONNETS TO BE PAINTED PER CITY PRESSURE RATING AFTER FLOW TEST.
3. HOSE BIBBS TO BE AMERICAN STANDARD THREADS.
4. RESTRAINED JOINTS REQUIRED. THRUST BLOCKS ARE NOT PERMITTED.
5. ADJUSTABLE TRENCH ADAPTOR ASSEMBLY REQUIRED FOR ALL VALVES GREATER THAN 3' DEEP.
6. INSTALL AT SIDE LOT LINES OR AT CORNERS OF ROADWAY INTERSECTIONS (TYPICAL).
7. CONTINUOUS TRACER WIRE TO BE COLOR CODED "BLUE" FOR WATER, LAID ON TOP IN TRENCH.
8. ALL OUTSIDE HEX NUTS, BOLTS AND HARDWARE (EXCEPT MECHANICAL BOLTS SUCH AS "T" BOLTS) SHALL BE MINIMUM 316 STAINLESS STEEL GRADE.
9. THE INTERNAL UPPER AND LOWER STEM SHALL BE MINIMUM OF 304 STAINLESS STEEL GRADE.

HOLLY HILL FLORIDA	CITY OF HOLLY HILL, FLORIDA STANDARD CONSTRUCTION DETAILS	DATE 02/2020
	FIRE HYDRANT ASSEMBLY	DETAIL NUMBER PW-3

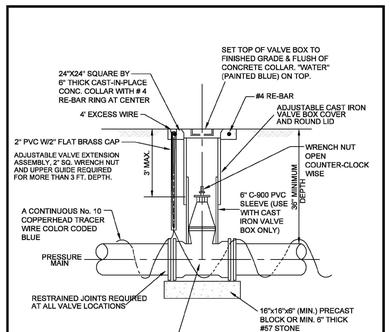

NOTES:
1. BOLT VALVES TO TEE OR CROSS WHEREVER AND WHENEVER APPLICABLE.
2. A CONTINUOUS TRACER WIRE TO BE COLOR CODED "BLUE" FOR WATER, LAYED ON TOP IN TRENCH
3. GATE VALVE WEDGE SHALL BE COMPLETELY ENCAPSULATED WITH EPDM RUBBER.
4. ALL OUTSIDE HEX NUTS, BOLTS AND HARDWARE (EXCEPT MECHANICAL BOLTS SUCH AS "T" BOLTS) SHALL BE MIN. 316 STAINLESS STEEL GRADE.

HOLLY HILL FLORIDA	CITY OF HOLLY HILL, FLORIDA STANDARD CONSTRUCTION DETAILS	DATE 02/2020
	POTABLE WATER VALVE AND VALVE BOX (4" - 16" VALVE SIZES)	DETAIL NUMBER PW-4

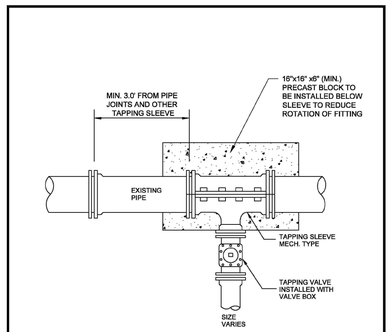

NOTES:
1. EPOXY COATED STEEL, STAINLESS STEEL SLEEVES WITH 316 STAINLESS STEEL BOLTS ARE PERMITTED WITH ALL TYPES OF PIPE MATERIALS.
2. INSTALL REQUIRED RESTRAINED JOINTS. IN NO INSTANCE SHALL THRUST BLOCKS BE ALLOWED.
3. ALL TAPPING OF MAINS SHALL BE PERFORMED BY OWNER / DEVELOPER AND WITNESSED BY THE CITY AND BILLED IN ACCORDANCE WITH THE ADOPTED FEE RESOLUTION. ALL MATERIALS TO BE PROVIDED BY DEVELOPER / CONTRACTOR.
4. ALL VALVES 2" OR GREATER SHALL BE GATE VALVES. CORPORATION STOPS ARE NOT ALLOWED ON VALVES 2" OR GREATER EXCEPT ON BLOW-OFFS.

HOLLY HILL FLORIDA	CITY OF HOLLY HILL, FLORIDA STANDARD CONSTRUCTION DETAILS	DATE 02/2020
	TAPPING SLEEVE AND VALVE	DETAIL NUMBER PW-5

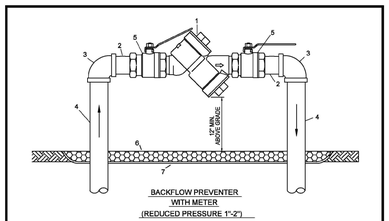

BACKFLOW PREVENTER WITH METER (REDUCED PRESSURE 1"-2")

ITEM	QUANT.	MATERIALS DESCRIPTION
1	1	1" - 2" BACKFLOW PREVENTER ASSEMBLY
2	2	1" - 2" x NOM. NIPPLES - BRASS
3	2	1" - 2" x 90° ELBOWS - BRASS
4	2	1" - 2" x VARIES RISER - BRASS
5	2	1" - 2" BALL VALVE
6	*	PEA GRAVEL
7	*	PLASTIC LINER

NOTES:
1. ALL DEVICES SHALL BE PAINTED TO COMPLY WITH FLORIDA ADMINISTRATIVE CODE CHAPTER 62-555 AND THE FLORIDA DEPARTMENT OF ENVIRONMENTAL PROTECTION CROSS-CONNECTION CONTROL PROGRAM. BLUE FOR DOMESTIC WATER, PURPLE FOR RECLAIMED WATER AND RED FOR FIRE LINE.
2. REDUCED PRESSURE BACKFLOW PREVENTERS ARE REQUIRED FOR ALL COMMERCIAL SERVICES AND SHALL BE INSTALLED BY A CERTIFIED TECHNICIAN AT OWNERS EXPENSE.

HOLLY HILL FLORIDA	CITY OF HOLLY HILL, FLORIDA STANDARD CONSTRUCTION DETAILS	DATE 02/2020
	WATER SERVICE W/ BACKFLOW PREVENTER (METER SIZES 1" - 2")	DETAIL NUMBER PW-9

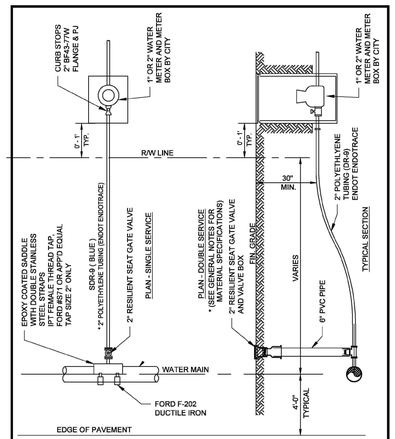

HOLLY HILL FLORIDA	CITY OF HOLLY HILL, FLORIDA STANDARD CONSTRUCTION DETAILS	DATE 02/2020
	WATER SERVICE LATERAL (METER SIZES 1" - 2")	DETAIL NUMBER PW-10

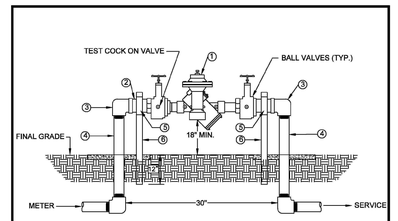

ITEM	QUANT.	MATERIALS DESCRIPTION
1.	1	2" BACKFLOW PREVENTER ASSEMBLY
2.	2	2" X NOM. NIPPLES - BRASS
3.	2	2" X 90° ELBOWS - BRASS
4.	2	2" X VARIES RISER - BRASS
5.	2	NON-CORROSIVE CLAMPS
6.	2	NON-CORROSIVE UNI-STRUT OR EQUIVALENT

NOTES:
1. INSTALLATION SHOWN ABOVE IS FOR A 2" SERVICE. CHANGE PIPING MATERIALS ACCORDINGLY FOR SERVICE SIZE.
2. DOUBLE CHECK VALVES MAY BE INSTALLED IN UNDERGROUND VAULTS AS WELL.
3. ALL DEVICES SHALL BE PAINTED TO COMPLY WITH FLORIDA ADMINISTRATIVE CODE CHAPTER 62-555 AND THE FLORIDA DEPARTMENT OF ENVIRONMENTAL PROTECTION CROSS-CONNECTION CONTROL PROGRAM. BLUE FOR DOMESTIC WATER, PURPLE FOR RECLAIMED WATER AND RED FOR FIRE LINE.
4. ALL 2" AND SMALLER BACKFLOW PREVENTER MUST BE STABILIZED WITH CHANNEL OR NON-CORROSIVE UNI-STRUT OR EQUIVALENT AND APPROPRIATE CLAMPS.
5. ALL FITTINGS COMPLIANT WITH NSF61 LOW LEAD.

HOLLY HILL FLORIDA	CITY OF HOLLY HILL, FLORIDA STANDARD CONSTRUCTION DETAILS	DATE 02/2020
	DOUBLE CHECK OR REDUCED PRESSURE 2" BACKFLOW PREVENETER	DETAIL NUMBER PW-15

REVISIONS

DATE	DESCRIPTION
4/11/23	CITY COMMENTS
5/17/23	ARCHITECT COMMENTS
5/18/23	BIDDING

1230 North US1, Suite 3
Ormond Beach, Florida 32174
Phone (386) 672-7784
www.Newkirk-Engineering.com
C.A. # 30209
L.C. # 26000584
© 2013
Civil Engineering
Transportation, CEI &
Landscape Architecture
NEWKIRK ENGINEERING INC.

CITY OF HOLLY HILL STANDARD UTILITY DETAILS

REPLACEMENT FIRE STATION # 96

1020 DAYTONA AVENUE
HOLLY HILL, FL 32117

THIS DRAWING IS THE PROPERTY OF NEWKIRK ENGINEERING ANY USE OR REPRODUCTION IN WHOLE OR PART IS PROHIBITED WITHOUT THE EXPRESSED WRITTEN CONSENT OF NEWKIRK ENGINEERING COPYRIGHT 2013 ALL RIGHTS RESERVED

THIS ITEM HAS BEEN DIGITALLY SIGNED AND SEALED BY HARRY NEWKIRK, PE # 62971 ON

HARRY NEWKIRK LICENSE NO. 62971 STATE OF FLORIDA PROFESSIONAL ENGINEER

PRINTED COPIES OF THIS DOCUMENT ARE NOT CONSIDERED SIGNED AND SEALED AND THE SIGNATURE MUST BE VERIFIED ON ANY ELECTRONIC COPIES.

PROJECT No:	2022-205
DATE:	MAY 18, 2023
DESIGN BY:	HHN
DRAWN BY:	NWS
CHECKED BY:	HHN
SCALE:	AS SHOWN

DRAWING NUMBER

16

Attachment: Exhibit C - Fire Station #96 Bid Set (2023-R-55 : Fire Station Construction)

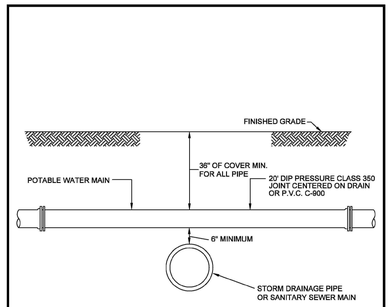

NOTE:

1. THIS DETAIL DOES NOT APPLY TO WATER OR SEWER SERVICES.

HOLLY HILL FLORIDA	CITY OF HOLLY HILL, FLORIDA STANDARD CONSTRUCTION DETAILS	DATE 02/2020
	STORM DRAINAGE PIPE OR SANITARY SEWER MAIN CONFLICT	DETAIL NUMBER PW-18

CONCRETE ENCASEMENT OF SANITARY SEWER IS AN ALTERNATIVE METHOD OF ADDRESSING A CONFLICT WHEN UNABLE TO MAINTAIN 18" VERTICAL SEPARATION DISTANCE. IN SUCH INSTANCES, THE MINIMUM PIPE VERTICAL SEPARATION SHALL BE 12".

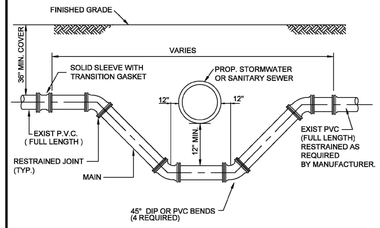

NOTES:

1. LOWERING OF EXISTING WATER MAIN & FORCE MAIN BY DEFLECTION METHOD ACCEPTABLE IF EXISTING FIELD CONDITIONS PERMIT.
2. LENGTH OF SECTION BASED ON MINIMUM LENGTH AS DETERMINED BY DIPRA RESTRAINED JOINT MANUAL.
3. INSTALL RESTRAINED JOINTS, AS REQUIRED, FROM DEFLECTION POINT IN BOTH DIRECTIONS.

HOLLY HILL FLORIDA	CITY OF HOLLY HILL, FLORIDA STANDARD CONSTRUCTION DETAILS	DATE 02/2020
	STORM DRAINAGE PIPE OR SANITARY SEWER MAIN CONFLICT	DETAIL NUMBER PW-19

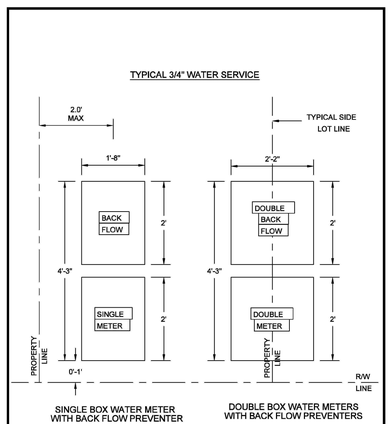

HOLLY HILL FLORIDA	CITY OF HOLLY HILL, FLORIDA STANDARD CONSTRUCTION DETAILS	DATE 02/2020
	METER BOX LAYOUT	DETAIL NUMBER PW-30

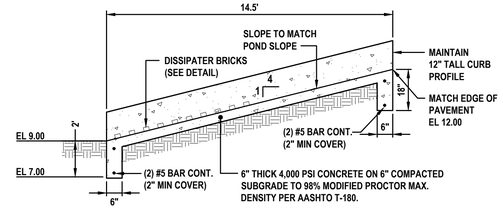

LONGITUDINAL SECTION

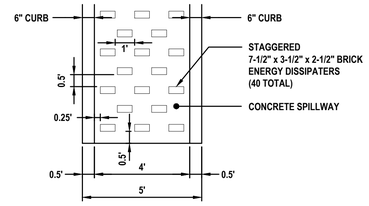

DISSIPATER BRICKS

NOTES:

1. SPILLWAY MAY BE ADJUSTED IN FIELD AS REQUIRED TO CONFORM WITH FINISH GRADE (OBTAIN ENGINEER'S APPROVAL).
2. ALL CONCRETE SHALL BE 3,000 PSI @ 28 DAYS..
3. ALL DISTURBED AREAS SHALL BE SODDED FULLY WITH BAHIA.

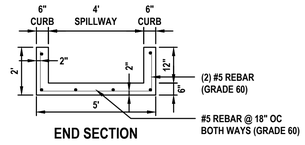

END SECTION

4' SPILLWAY DETAIL

NOT TO SCALE

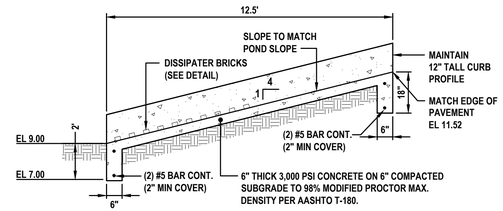

LONGITUDINAL SECTION

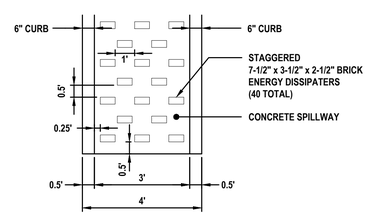

DISSIPATER BRICKS

NOTES:

1. SPILLWAY MAY BE ADJUSTED IN FIELD AS REQUIRED TO CONFORM WITH FINISH GRADE (OBTAIN ENGINEER'S APPROVAL).
2. ALL CONCRETE SHALL BE 3,000 PSI @ 28 DAYS..
3. ALL DISTURBED AREAS SHALL BE SODDED FULLY WITH BAHIA.

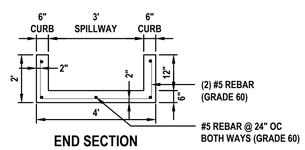

END SECTION

3' SPILLWAY DETAIL

NOT TO SCALE

REVISIONS	
DATE	DESCRIPTION
4/11/23	CITY COMMENTS
5/17/23	ARCHITECT COMMENTS
5/18/23	BIDDING

1230 North US1, Suite 3
Ormond Beach, Florida 32174
Phone (386) 872-7784
www.Newkirk-Engineering.com
C.A. # 30209
L.C. # 26000584
© 2013
Civil Engineering
Transportation, CEI &
Landscape Architecture
NEWKIRK ENGINEERING INC.

CITY OF HOLLY HILL
STANDARD UTILITY DETAILS
REPLACEMENT FIRE STATION # 96
1020 DAYTONA AVENUE
HOLLY HILL, FL 32117

THIS DRAWING IS THE PROPERTY OF NEWKIRK ENGINEERING ANY USE OR REPRODUCTION IN WHOLE OR PART IS PROHIBITED WITHOUT THE EXPRESSED WRITTEN CONSENT OF NEWKIRK ENGINEERING COPYRIGHT 2013 ALL RIGHTS RESERVED

THIS ITEM HAS BEEN DIGITALLY SIGNED AND SEALED BY HARRY NEWKIRK, PE # 62971 ON

HARRY NEWKIRK LICENSE NO. 62971 STATE OF FLORIDA PROFESSIONAL ENGINEER

PRINTED COPIES OF THIS DOCUMENT ARE NOT CONSIDERED SIGNED AND SEALED AND THE SIGNATURE MUST BE VERIFIED ON ANY ELECTRONIC COPIES.

PROJECT No:	2022-205
DATE:	MAY 18, 2023
DESIGN BY:	HHN
DRAWN BY:	NWS
CHECKED BY:	HHN
SCALE:	AS SHOWN

DRAWING NUMBER

17

Attachment: Exhibit C - Fire Station #96 Bid Set (2023-R-55 : Fire Station Construction)

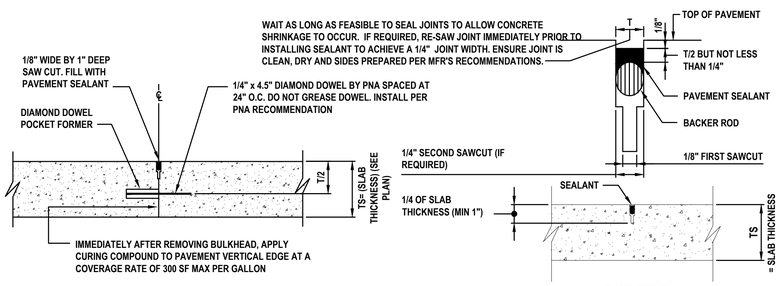

CONCRETE PAVEMENT JOINT DETAILS

NOT TO SCALE

CONCRETE WALKS SHALL BE 4 INCHES THICK, CLASS I, HAVING A 3,000 PSI STRENGTH @ 28 DAYS, POURED OVER PROPERLY PREPARED SUBGRADE. ALL CONCRETE SIDEWALKS SHALL BE 8 INCHES THICK ACROSS DRIVEWAYS. 1/2 INCH EXPANSION JOINTS SHALL BE PLACED AT A MAXIMUM OF 5'. CRACK CONTROL JOINTS SHALL BE 5' ON CENTERS.

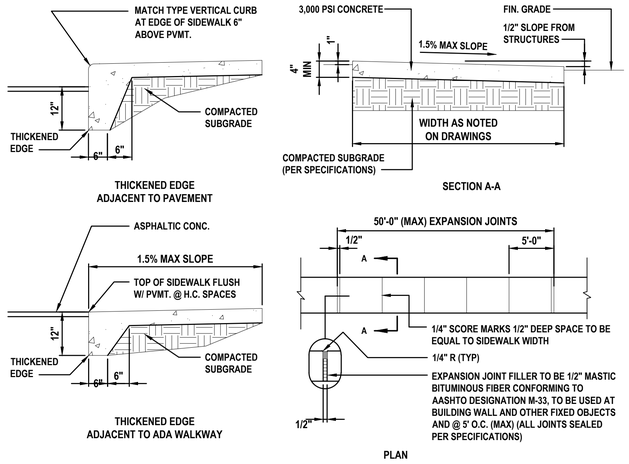

SIDEWALK DETAILS

NOT TO SCALE

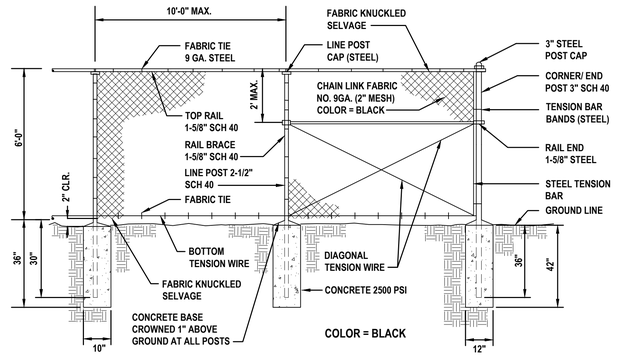

6' CHAIN LINK FENCE DETAIL

NOT TO SCALE

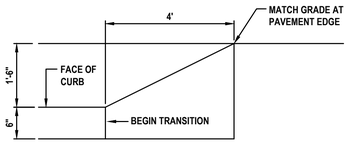

"F" CURB TRANSITION TO FLAT DETAIL

NOT TO SCALE

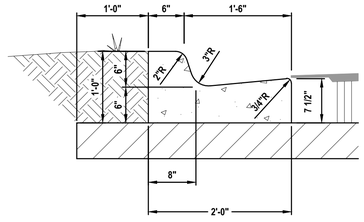

TYPE "F" CATCH CURB DETAIL

NOT TO SCALE

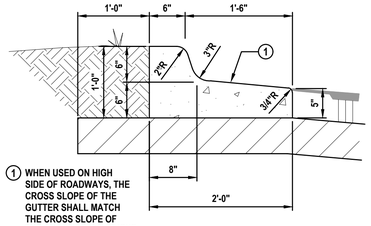

TYPE "F" SPILLOUT CURB DETAIL

NOT TO SCALE

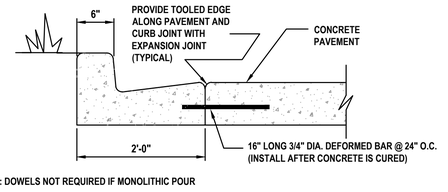

NOTE: DOWELS NOT REQUIRED IF MONOLITHIC POUR

CONCRETE CURB AND GUTTER DOWELED JOINT DETAIL

NOT TO SCALE

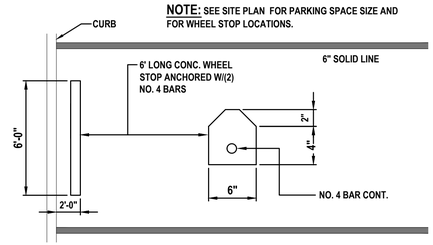

CONCRETE WHEEL STOP DETAIL

NOT TO SCALE

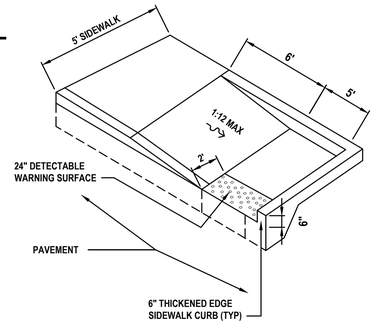

CURB RAMP DETAIL (TYPE CR-C)

NOT TO SCALE

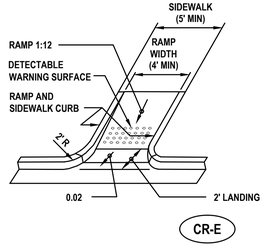

SEE FDOT INDEX No. 304 FOR ADDITIONAL INFORMATION

SIDEWALK CURB RAMP DETAIL

NOT TO SCALE

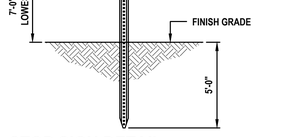

STOP SIGN DETAIL

NOT TO SCALE

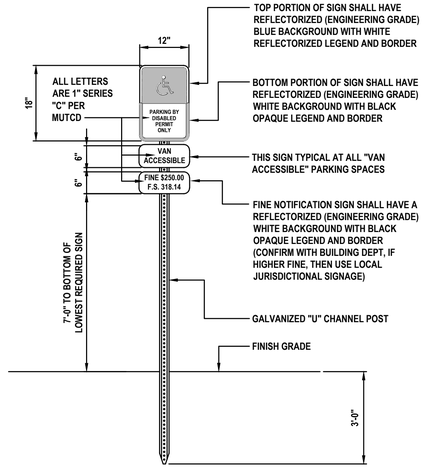

HANDICAP PARKING SIGN

ONE AT EACH HANDICAP SPACE.

NOT TO SCALE

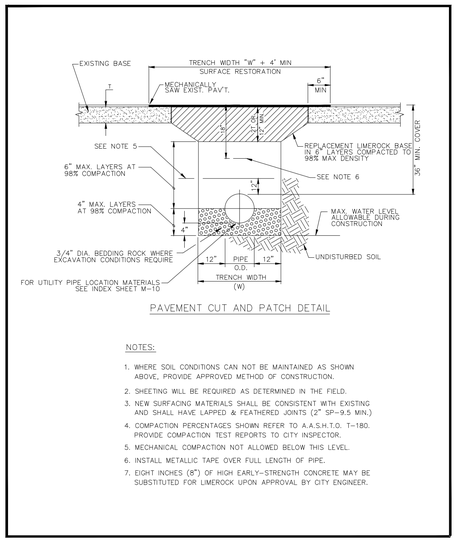

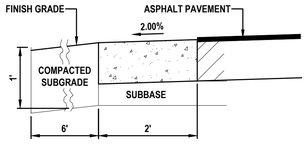

ENVIRONMENTAL CURB

NOT TO SCALE

1230 North US1, Suite 3
Ormond Beach, Florida 32174
Phone (386) 872-7784
www.Newkirk-Engineering.com
C.A. # 30209
L.C. # 26000584
© 2013
Civil Engineering
Transportation, CEI &
Landscape Architecture
NEWKIRK ENGINEERING INC.

REVISIONS

DATE	DESCRIPTION
4/11/23	CITY COMMENTS
5/17/23	ARCHITECT COMMENTS
5/18/23	BIDDING

MISCELLANEOUS DETAILS AND NOTES

REPLACEMENT FIRE STATION # 96

1020 DAYTONA AVENUE
HOLLY HILL, FL 32117

THIS DRAWING IS THE PROPERTY OF NEWKIRK ENGINEERING ANY USE OR REPRODUCTION IN WHOLE OR PART IS PROHIBITED WITHOUT THE EXPRESSED WRITTEN CONSENT OF NEWKIRK ENGINEERING COPYRIGHT 2013 ALL RIGHTS RESERVED

THIS ITEM HAS BEEN DIGITALLY SIGNED AND SEALED BY HARRY NEWKIRK, PE # 62971 ON

HARRY NEWKIRK LICENSE NO. 62971 STATE OF FLORIDA PROFESSIONAL ENGINEER

PRINTED COPIES OF THIS DOCUMENT ARE NOT CONSIDERED SIGNED AND SEALED AND THE SIGNATURE MUST BE VERIFIED ON ANY ELECTRONIC COPIES.

PROJECT No:	2022-205
DATE:	MAY 18, 2023
DESIGN BY:	HHN
DRAWN BY:	NWS
CHECKED BY:	HHN
SCALE:	AS SHOWN

DRAWING NUMBER

18

Attachment: Exhibit C - Fire Station #96 Bid Set (2023-R-55 : Fire Station Construction)

NOTE:

1. This Index applies to Two-Lane, Two-Way and Multilane Roadways, including Medians of divided roadways, with work on the shoulder.
2. L = Taper Length
   X = Work Zone Sign Spacing
   B = Buffer Length
   See Index 102-600 for "L", "X", "B", and channelizing device spacing values.
3. Where work activities are between 2' and 15' from the edge of traveled way, the Engineer may omit signs and channelizing devices for work operations 60 minutes or less.
4. When four or more work vehicles enter the through traffic lanes in a one hour period (excluding establishing and terminating the work area), use a flagger or lane closure to accommodate work vehicle ingress and egress.
5. For work less than 2' from the traveled way and work zone speed is greater than 45 MPH, use a lane closure.
6. The "Speeding Fines Doubled When Workers Present" signs (MOT-13-06) and "End Road Work" Signs (G20-2) along with the associated work zone sign spacing distances may be omitted when the work operation is in place for 24 hours or less.
7. Temporary pavement markings may be omitted when the work operation is in place for 3 days or less.
8. Omit "Shoulder Closed" signs (W21-5a) along with associated work zone sign spacing distances for work on the median.
9. When there is no paved shoulder, the "Worker" sign (W21-1) may be used instead of the "Shoulder Closed" sign (W21-5a).

SYMBOLS:

- Work Area
- Channelizing Device (See Index 102-600)
- Work Zone Sign
- Lane Identification and Direction of Traffic

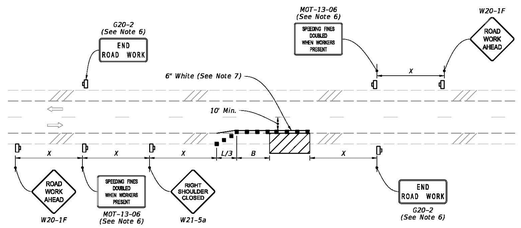

TWO-LANE ROADWAY
SHOULDER WORK LESS THAN 2' FROM THE TRAVELED WAY
WITH WORK ZONE SPEED OF 45 MPH OR LESS

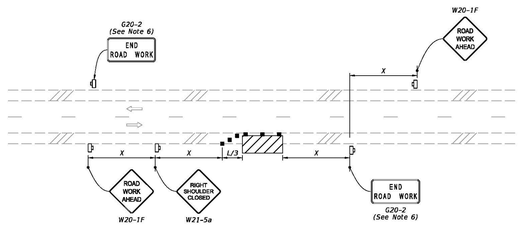

TWO-LANE ROADWAY
SHOULDER WORK BETWEEN 2' AND 15' FROM THE TRAVELED WAY

2:48:14 PM
9/21/2021

LAST REVISION	DESCRIPTION:	FDOT FY 2022-23 STANDARD PLANS	TWO-LANE AND MULTILANE, WORK ON SHOULDER	INDEX	SHEET
11/01/21	REVISION			102-602	1 of 2

NOTES:

1. Cover or deactivate pedestrian traffic signal display(s) controlling closed crosswalks.
2. Place pedestrian LCDs across the full width of the closed sidewalk.
3. For post mounted signs located near or adjacent to a sidewalk, maintain a minimum 7' clearance from the bottom of the sign panel to the surface of the sidewalk.
4. "Sidewalk Closed" signs (R9-XX) may be mounted on pedestrian LCDs in accordance with the manufacturer's instructions.
5. Omit the Advance Closure LCD if it blocks access to other pedestrian facilities (e.g., transit stops, residences, or business entrances).

SYMBOLS:

- Work Area
- Work Zone Sign
- Pedestrian Longitudinal Channelizing Device (LCD)
- Lane Identification and Direction of Traffic

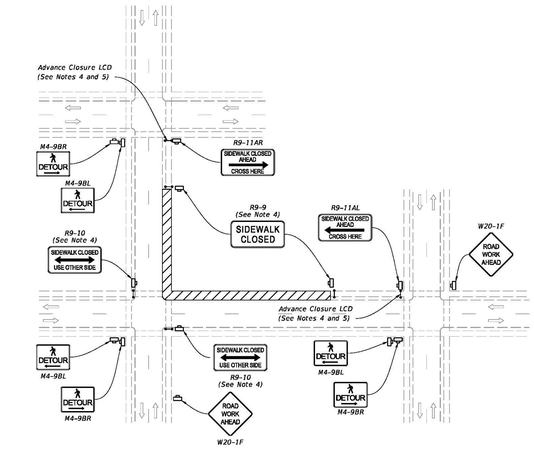

PEDESTRIAN DETOUR

12:36:58 PM
9/21/2021

LAST REVISION	DESCRIPTION:	FDOT FY 2022-23 STANDARD PLANS	SIDEWALK CLOSURE	INDEX	SHEET
11/01/20	REVISION			102-660	1 of 2

NOTES:

1. L = Taper Length
   B = Buffer Length
   X = Work Zone Sign Distance
   See Index 102-600 for "L", "B", "X", channelizing device spacing values.
2. Provide a 5' wide temporary pedestrian way with a maximum cross-slope of 0.02, except where space restrictions warrant a minimum width of 4'. Provide a 5' x 5' passing space for temporary pedestrian ways less than 5' in width at intervals not to exceed 200'.
3. When temporary pedestrian ways require curb ramps, meet the requirements of Index 522-002. Detectable warnings are not required for curb ramps diverting pedestrian traffic into a closed lane.
4. The "Speeding Fines Doubled When Workers Present" signs (MOT-13-06) and "End Road Work" signs (G20-2), along with associated work zone sign distances, may be omitted when the work operation will be in place for 24 hours or less.
5. Pedestrian Diversion Option 2 may only be used when called for in the Plans or as approved by an Engineer.

SYMBOLS:

- Work Area
- Temporary Pedestrian Way
- Channelizing Device (See Index 102-600)
- Pedestrian Longitudinal Channelizing Device (LCD)
- Work Zone Sign
- Arrow Board
- Crash Cushion
- Lane Identification and Direction of Traffic

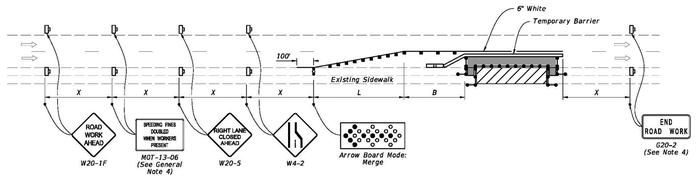

PEDESTRIAN DIVERSION - OPTION 1
(Temporary Barrier Shown, Low Profile Barrier Similar)

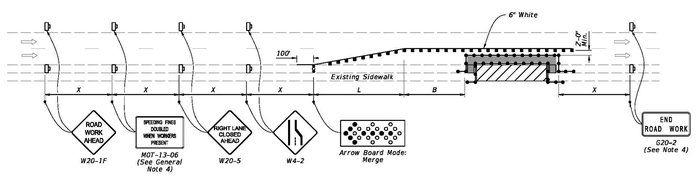

PEDESTRIAN DIVERSION - OPTION 2
(Work Zone Speed 35 mph or Less)

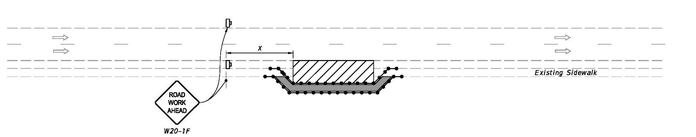

PEDESTRIAN SPECIAL DETOUR

12:36:58 PM
9/21/2021

LAST REVISION	DESCRIPTION:	FDOT FY 2022-23 STANDARD PLANS	SIDEWALK CLOSURE	INDEX	SHEET
11/01/21	REVISION			102-660	2 of 2

REVISIONS

DATE	DESCRIPTION
4/11/23	CITY COMMENTS
5/17/23	ARCHITECT COMMENTS
5/18/23	BIDDING

1230 North US1, Suite 3
Ormond Beach, Florida 32174
Phone (386) 872-7784
www.Newkirk-Engineering.com
C.A. # 30209
L.C. # 26000584
© 2013
Civil Engineering
Transportation, CEI &
Landscape Architecture
NEWKIRK ENGINEERING INC.

MAINTENANCE OF TRAFFIC
REPLACEMENT FIRE STATION # 96

1020 DAYTONA AVENUE
HOLLY HILL, FL 32117

THIS DRAWING IS THE PROPERTY OF NEWKIRK ENGINEERING ANY USE OR REPRODUCTION IN WHOLE OR PART IS PROHIBITED WITHOUT THE EXPRESSED WRITTEN CONSENT OF NEWKIRK ENGINEERING COPYRIGHT 2013 ALL RIGHTS RESERVED

THIS ITEM HAS BEEN DIGITALLY SIGNED AND SEALED BY HARRY NEWKIRK, PE # 62971 ON

HARRY NEWKIRK LICENSE NO. 62971 STATE OF FLORIDA PROFESSIONAL ENGINEER

PRINTED COPIES OF THIS DOCUMENT ARE NOT CONSIDERED SIGNED AND SEALED AND THE SIGNATURE MUST BE VERIFIED ON ANY ELECTRONIC COPIES.

PROJECT No:	2022-205
DATE:	MAY 18, 2023
DESIGN BY:	HHN
DRAWN BY:	NWS
CHECKED BY:	HHN
SCALE:	AS SHOWN

DRAWING NUMBER

19

Attachment: Exhibit C - Fire Station #96 Bid Set (2023-R-55 : Fire Station Construction)

20 10 0 20 40
GRAPHIC SCALE
1"=20'

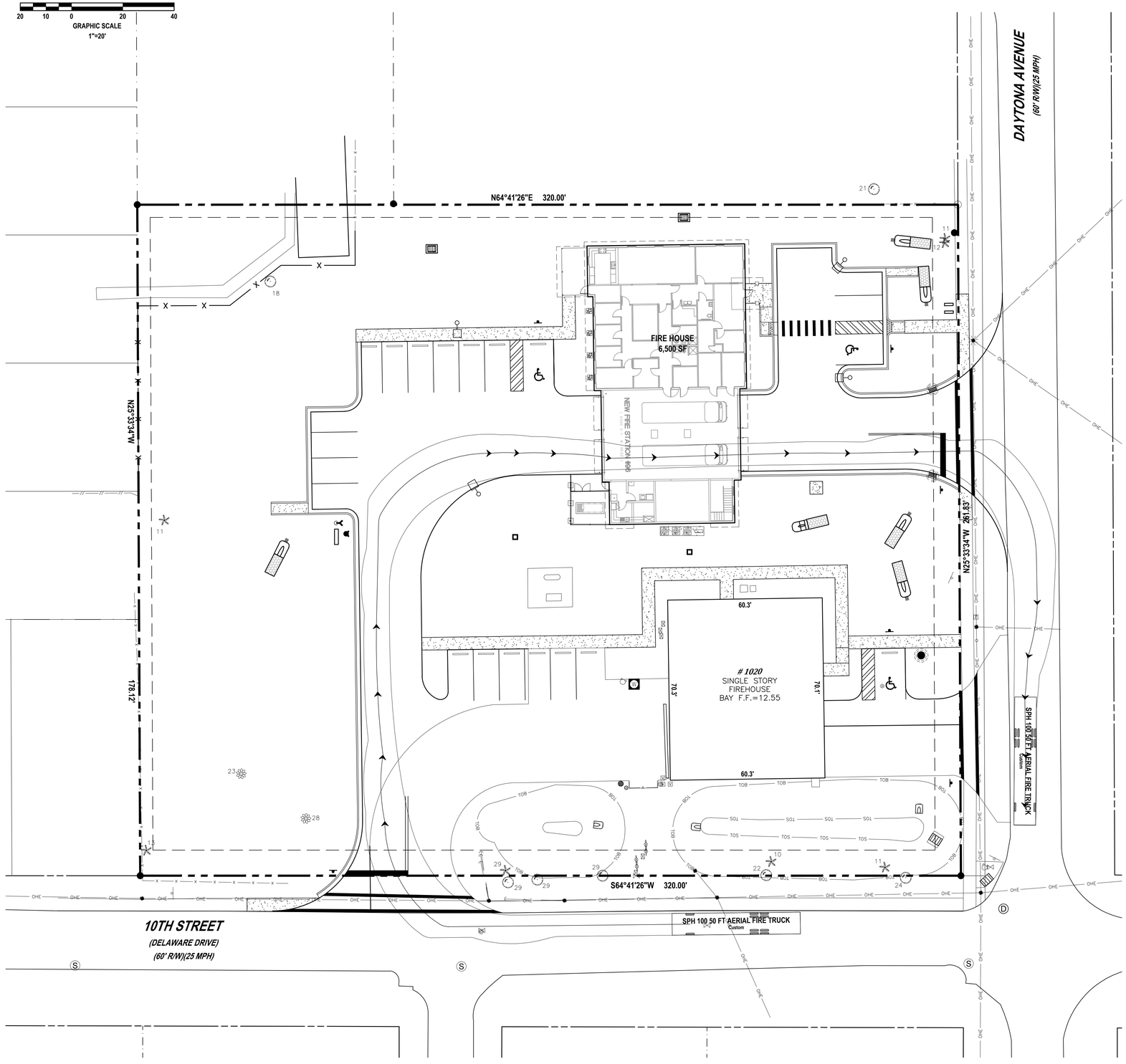

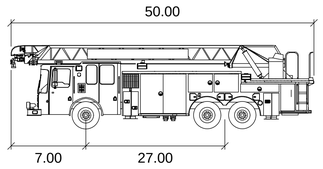

SPH 100 50 FT AERIAL FIRE TRUCK

feet

Width	:	8.50
Track	:	8.50
Lock to Lock Time	:	6.0
Steering Angle	:	33.3

REVISIONS

DATE	DESCRIPTION
4/11/23	CITY COMMENTS
5/17/23	ARCHITECT COMMENTS
5/18/23	BIDDING

1230 North US1, Suite 3
Ormond Beach, Florida 32174
Phone (386) 872-7784
www.Newkirk-Engineering.com
C.A. # 30209
L.C. # 26000584
© 2013
Civil Engineering
Transportation, CEI &
Landscape Architecture
NEWKIRK ENGINEERING INC.

AUTOTURN - FIRE TRUCK PLAN
REPLACEMENT FIRE STATION # 96
1020 DAYTONA AVENUE
HOLLY HILL, FL 32117

THIS DRAWING IS THE PROPERTY OF NEWKIRK ENGINEERING ANY USE OR REPRODUCTION IN WHOLE OR PART IS PROHIBITED WITHOUT THE EXPRESSED WRITTEN CONSENT OF NEWKIRK ENGINEERING COPYRIGHT 2013 ALL RIGHTS RESERVED

THIS ITEM HAS BEEN DIGITALLY SIGNED AND SEALED BY HARRY NEWKIRK, PE # 62971 ON

HARRY NEWKIRK LICENSE NO. 62971 STATE OF FLORIDA PROFESSIONAL ENGINEER

PRINTED COPIES OF THIS DOCUMENT ARE NOT CONSIDERED SIGNED AND SEALED AND THE SIGNATURE MUST BE VERIFIED ON ANY ELECTRONIC COPIES.

PROJECT No:	2022-205
DATE:	MAY 18, 2023
DESIGN BY:	HHN
DRAWN BY:	NWS
CHECKED BY:	HHN
SCALE:	1" = 20'

DRAWING NUMBER

20

Attachment: Exhibit C - Fire Station #96 Bid Set (2023-R-55 : Fire Station Construction)

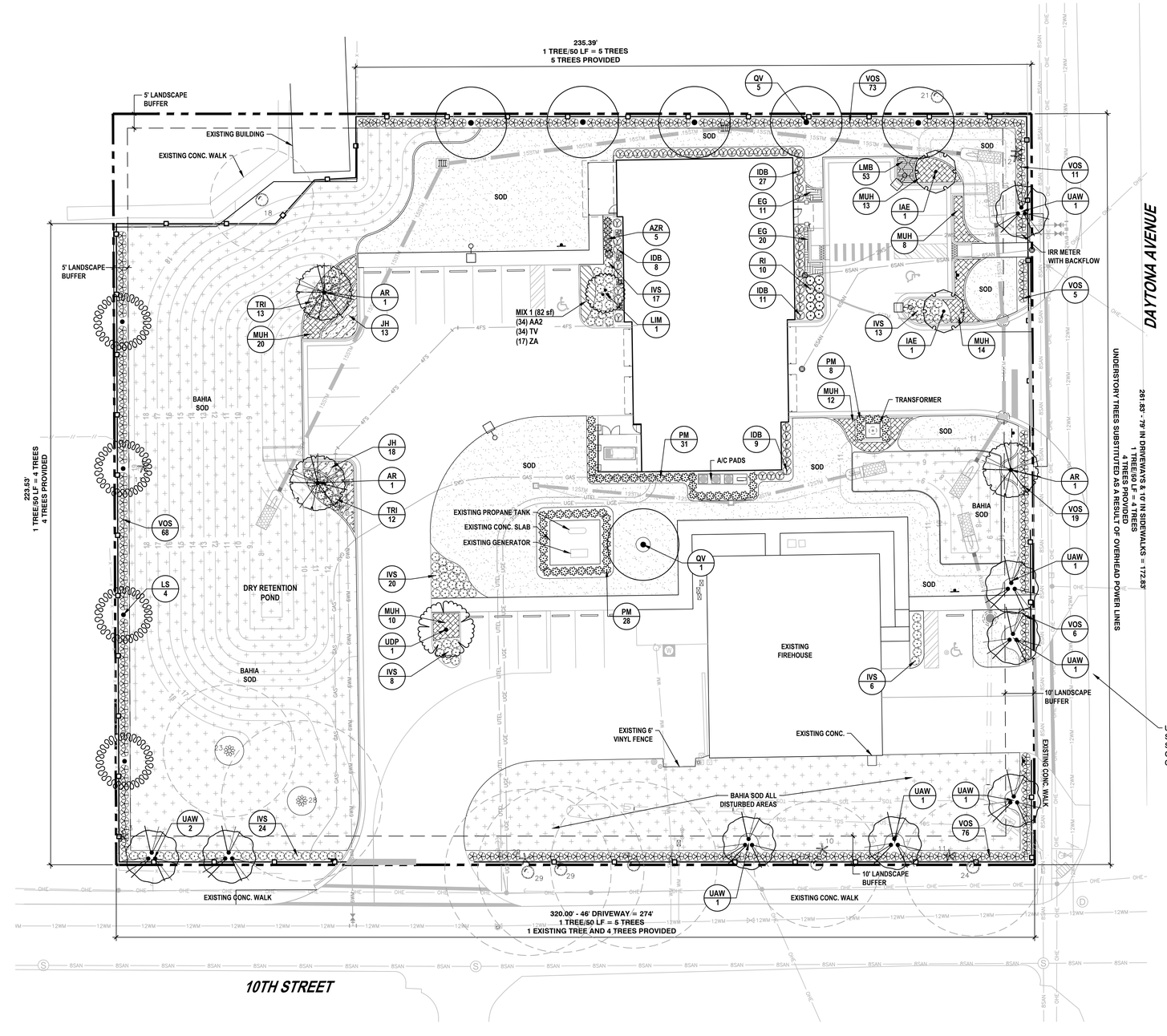

PLANT SCHEDULE

SHADE TREES	QTY	BOTANICAL NAME	COMMON NAME	SIZE	REMARKS
AR	3	ACER RUBRUM	RED MAPLE	2.5" CAL., 10` HT.	
LS	4	LIQUIDAMBAR STYRACIFLUA	SWEET GUM	2.5" CAL., 10` HT.	
QV	6	QUERCUS VIRGINIANA	SOUTHERN LIVE OAK	2.5" CAL., 10` HT.	
UAW	8	ULMUS ALATA	WINGED ELM	2" CAL., 8` HT.	
UDP	1	ULMUS PARVIFOLIA `DRAKE`	DRAKE CHINESE ELM	2" CAL., 8` HT	

UNDERSTORY TREES	QTY	BOTANICAL NAME	COMMON NAME	SIZE	REMARKS
IAE	2	ILEX X ATTENUATA `EAGLESTON`	EAGLESTON HOLLY	2.5" CAL., 10` HT.	
LIM	1	LAGERSTROEMIA INDICA X FAURIEI `MUSKOGEE`	LAVENDER CRAPE MYRTLE	3" CAL., COMBINED, 6+` HT.	M.T.

SHRUBS	QTY	BOTANICAL NAME	COMMON NAME	SIZE	REMARKS
AZR	5	AZALEA X `RED RUFFLES`	RED RUFFLES AZALEA	3 GAL., 24" HT, X 18" SPRD.	36" O.C.
IDB	55	ILEX CORNUTA 'BURFORDII NANA'	DWARF BURFORD HOLLY	3 GAL., 24" HT, X 18" SPRD.	36" O.C.
IVS	88	ILEX VOMITORIA `STOKES DWARF`	STOKES DWARF YAUPON HOLLY	3 GAL., 12" HT. X 18" SPRD.	36" O.C.
PM	67	PODOCARPUS MACROPHYLLUS	YEW PINE	3 GAL., 24" HT. X 6" SPRD.	36" O.C.
RI	10	RHAPHIOLEPIS INDICA	INDIAN HAWTHORN	3 GAL., 15" HT. X 15" SPRD.	36" O.C.
TRI	25	TRIPSACUM DACTYLOIDES	FAKAHATCHEE GRASS	1 GAL, 24" HT.	36" O.C.
VOS	258	VIBURNUM OBOVATUM 'SELECT'	WALTER'S VIBURNUM	3 GAL., 15" HT. X 15" SPRD.	36" O.C.

GROUND COVERS	QTY	BOTANICAL NAME	COMMON NAME	SIZE	SPACING	REMARKS
EG	31	EVOLVULUS GLOMERATUS `BLUE DAZE`	BRAZILIAN DWARF MORNING GLORY	1 GAL.	18" o.c.	18" - 24" O.C.
JH	31	JUNIPERUS HORIZONTALIS 'BLUE RUG'	BLUE RUG JUNIPER	3 GAL.	36" o.c.	36" O.C.
LMB	53	LIRIOPE MUSCARI `BIG BLUE`	BIG BLUE LILYTURF	1 GAL.	12" o.c.	12" O.C.
MUH	77	MUHLENBERGIA CAPILLARIS	PINK MUHLY GRASS	3 GAL.	36" o.c.	36" O.C.

PLANT MIX SCHEDULE

MIX 1	82 SF
FLOWER MIX	
AGAPANTHUS AFRICANUS / AFRICAN LILY	35
TULBAGHIA VIOLACEA / SOCIETY GARLIC	35
ZEPHYRANTHES ATAMASCO / ATAMASCO LILY	18

EXISTING TREE LEGEND

- OAK TREE
- MAGNOLIA TREE
- PALM TREE

LEGEND

- ST. AUGUSTINE SOD
- BAHIA SOD

VUA INFORMATION

VUA LANDSCAPE REQUIREMENTS	
PARKING SPACES	21
VEHICULAR USE AREA (SQFT)	20,920
LANSCAPE AREA REQUIRED (SQFT)	528
LANDSCAPE AREA PROVIDED (SQFT)	1,542
VEHICULAR USE LANDSCAPE AREA	S.F.
VULA 1	297
VULA 2	443
VULA 3	463
VULA 4	150
VULA 5	190
TOTAL:	1,542

GRAPHIC SCALE
1"=20'

REVISIONS

DATE	DESCRIPTION
4/11/23	CITY COMMENTS
5/12/23	CITY COMMENTS
5/18/23	BIDDING

1230 North US1, Suite 3
Ormond Beach, Florida 32174
Phone (386) 672-7794
www.Newkirk-Engineering.com
C.A. # 30209
L.C. # 26000584
C 2013
Civil Engineering
Transportation, CEI &
Landscape Architecture
NEWKIRK ENGINEERING INC.

LANDSCAPE PLAN
REPLACEMENT FIRE STATION # 96
1020 DAYTONA AVENUE
HOLLY HILL, FL 32117

THIS DRAWING IS THE PROPERTY OF NEWKIRK ENGINEERING ANY USE OR REPRODUCTION IN WHOLE OR PART IS PROHIBITED WITHOUT THE EXPRESSED WRITTEN CONSENT OF NEWKIRK ENGINEERING COPYRIGHT 2013 ALL RIGHTS RESERVED

THIS ITEM HAS BEEN DIGITALLY SIGNED AND SEALED BY LAUREN ADAMS, RLA # 6667278 ON

LAUREN ADAMS LICENSE NO. 6667278 STATE OF FLORIDA LANDSCAPE ARCHITECT

PRINTED COPIES OF THIS DOCUMENT ARE NOT CONSIDERED SIGNED AND SEALED AND THE SIGNATURE MUST BE VERIFIED ON ANY ELECTRONIC COPIES.

PROJECT No:	2022-205
DATE:	FEBRUARY 2023
DESIGN BY:	LAA
DRAWN BY:	CRA
CHECKED BY:	LAA
SCALE:	1" = 20'

DRAWING NUMBER

L1

Attachment: Exhibit C - Fire Station #96 Bid Set (2023-R-55 : Fire Station Construction)

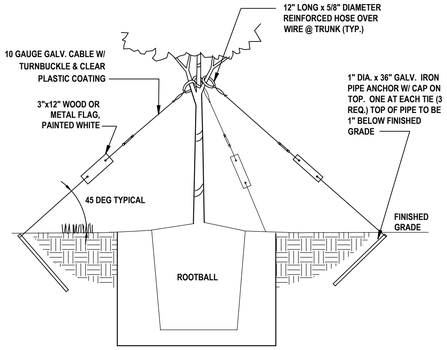

STAKING DETAIL

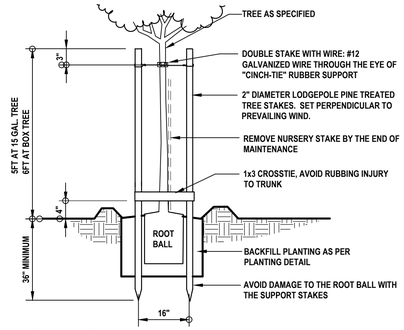

STAKING DETAIL

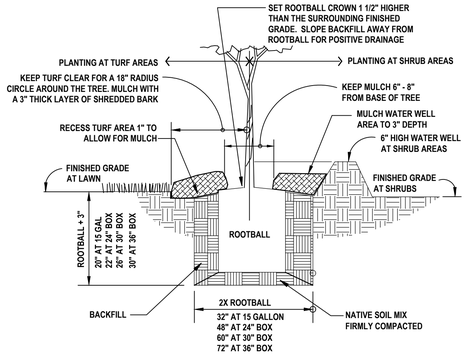

PLANT PIT DETAIL

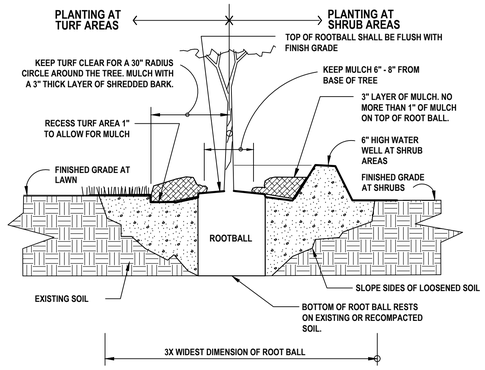

PLANT PIT DETAIL

LANDSCAPE SOIL SPECIFICATIONS

1. CONTRACTOR WILL BE RESPONSIBLE FOR ANY REQUIRED EXCAVATION AND FOR RAKING AND SMOOTHING OF GRADE. IT IS RECOMMENDED THAT LANDSCAPE CONTRACTOR COORDINATE WITH GRADING CONTRACTOR TO ESTABLISH SUBGRADES FOR PLANTING AREAS AS REQUIRED BELOW.
2. LANDSCAPE SOIL REFERS TO STOCKPILED TOPSOIL OR THE PLANTING MIXTURE AS SPECIFIED BELOW. STRUCTURAL SOIL OR FILL DIRT SHALL NOT BE USED IN PLANTED AREAS.
3. TOPSOIL SHALL BE STOCKPILED IF THE SITE CONSISTS OF NATIVE PLANT COMMUNITIES. IF NOXIOUS AND/OR INVASIVE PLANT SPECIES ARE PRESENT, TOPSOIL SHALL NOT BE STOCKPILED AND THE PLANTING MIXTURE BELOW SHALL BE USED.
4. IF STOCKPILED, THE TOPSOIL SHALL BE SALVAGED TO A DEPTH OF 4 TO 6 INCHES AND STOCKPILED NO HIGHER THAN 3 FEET IN HEIGHT.
5. TOPSOIL SHALL BE STORED FOR AS SHORT A DURATION AS POSSIBLE TO ENSURE SURVIVAL OF SEEDS AND SOIL ORGANISMS.
6. IF TOPSOIL HAS NOT BEEN STOCKPILED, PLANTING MIXTURE FOR TREES AND SHRUBS SHALL CONSIST OF 1/3 "COMPOST", 1/3 COARSE SAND, AND 1/3 EXISTING SOIL, THOROUGHLY MIXED. IF THE EXISTING SOIL IS NOT NATIVE AND FREE OF INVASIVES, THEN TOPSOIL SHALL BE IMPORTED FOR THIS COMPONENT.
7. MIXTURE FOR PALMS SHALL BE 50 PERCENT COARSE SAND AND 50 PERCENT EXISTING SOIL. MIX THOROUGHLY WITH EXISTING SOIL.
8. LANDSCAPE SOIL SHALL BE USED IN ALL PLANT BEDS CONSISTING OF SHRUBS AND GROUNDCOVER TO A DEPTH OF 6" AND MULCH TO A DEPTH OF 3".
9. LANDSCAPE SOIL SHALL BE FREE OF DEBRIS, WEEDS, PARTICLES LARGER THAN 0.50 INCHES AND RINSATE CONTAINING LIME OR TOXIC MATERIALS.
10. EXISTING SOIL SHOULD NOT BE CONTINUOUSLY EXCAVATED BENEATH THE DRIP LINE OF EXISTING TREES. IN THIS CASE, IF SHRUBS OR GROUNDCOVER ARE PROPOSED, THEY SHOULD BE PLANTED IN NATIVE SOIL WITHOUT AMENDMENT.

REFER TO LANDSCAPE DETAILS FOR MINIMUM PLANTING PIT DIMENSIONS.

LANDSCAPE NOTES

1. ALL PLANT MATERIAL SHALL CONFORM TO THE STANDARDS FOR FLORIDA #1 OR BETTER AS DESCRIBED IN THE CURRENT "GRADES AND STANDARDS FOR NURSERY PLANTS", STATE OF FLORIDA, DEPARTMENT OF AGRICULTURE, TALLAHASSEE, OR THEIR EQUAL AS DETERMINED BY THE LANDSCAPE ARCHITECT. PLANT MATERIAL SHALL BE CLEARLY IDENTIFIED AS FLORIDA #1 OR BETTER ON EITHER LABELS OR INVOICES.
2. ALL PLANT SPECIFICATIONS MUST BE MET OR EXCEEDED. SIZES IN PLANT SCHEDULE ARE MINIMUMS AND EACH MUST BE MET. CONTAINERS MAY NEED TO BE UPSIZED TO MEET ALL SPECIFICATIONS.
3. ALL MULCH SHALL BE PINE BARK AND INSTALLED 3" DEEP. TREES IN SOD TO BE IN A 5' MINIMUM-MULCHED RING. ALL PALMS TO BE IN A 3' MULCH RING. MULCH TO BE INSTALLED 6" FROM TRUNK.
4. SOD SHALL BE ST. AUGUSTINE "FLORITAM" UNLESS OTHERWISE NOTED ON THE PLAN AND SHALL BE 95% WEED-FREE. WHERE SPECIFIED, BAHIA SOD SHALL BE 85% WEED-FREE. ALL SOD SHALL BE INSTALLED WITH TIGHT JOINTS, ROLLED AND FERTILIZED.
5. ALL DIMENSIONS SHALL BE FIELD-CHECKED BY THE LANDSCAPE CONTRACTOR PRIOR TO CONSTRUCTION, WITH ANY DISCREPANCIES REPORTED IMMEDIATELY TO THE LANDSCAPE ARCHITECT.
6. THE PLANT MATERIALS SCHEDULE IS PROVIDED FOR THE CONVENIENCE OF THE LANDSCAPE CONTRACTOR; SHOULD THERE BE ANY DISCREPANCY BETWEEN THE PLAN AND THE PLANT LIST, THE PLAN WILL PREVAIL.
7. ALL MATERIALS MUST BE AS SPECIFIED ON THE LANDSCAPE PLAN. IF MATERIALS OR LABOR DO NOT ADHERE TO THE SPECIFICATIONS, THEY WILL BE REJECTED AT NO ADDITIONAL COST TO THE OWNER.
8. PLANTING BEDS MAY BE TREATED WITH CHEMICAL HERBICIDE AS NEEDED. USE AS DIRECTED BY MANUFACTURERS.
9. NO SUBSTITUTIONS OR CHANGES OF ANY KIND WILL BE ALLOWED AT THE TIME OF BIDDING SO AS TO PROVIDE FOR FAIR COMPARISON.
10. THE CONTRACTOR SHALL VERIFY EXISTENCE AND LOCATION OF ALL EXISTING UTILITIES AND UNDERGROUND CONDITIONS PRIOR TO HIS COMMENCEMENT OF THE ANY WORK.
11. ALL BUILDING MATERIALS AND LABOR SHALL CONFORM TO THE FLORIDA BUILDING CODE AND ALSO TO ALL LOCAL CODES THAT HAVE JURISDICTION.
12. ALL PERMIT AND VARIANCE APPLICATIONS SHALL BE MADE BY THE CONTRACTOR.
13. PRIOR TO CONSTRUCTION OF PLANTING BEDS, ALL AREAS ARE TO HAVE SOIL TESTS CONDUCTED TO DETERMINE pH AND SOIL FERTILITY. IT IS THE RESPONSIBILITY OF THE LANDSCAPE CONTRACTOR TO AMEND THE SOIL TO MEET ADEQUATE FERTILITY AND pH FOR CORRESPONDING PLANT MATERIAL. ALL TEST RESULTS SHALL BE REPORTED TO THE LANDSCAPE ARCHITECT.
14. WHERE AZALEAS, ROSES OR LOROPETALUMS ARE TO BE PLANTED, THE SOIL SHALL BE AMENDED BY REMOVING SOME OF THE NATIVE SOIL AND REPLACING WITH SOIL WITH A PH RANGE OF BETWEEN 5.5 - 6.5.
15. EQUIPMENT SHALL BE OPERATED IN A MANNER AS NOT TO INJURE OR DESTROY ANY TREES SHOWN TO REMAIN. CONTRACTOR SHALL NOT CAUSE OR ALLOW THE CLEANING OF EQUIPMENT OR MATERIAL WITHIN THE DRIP LINE OF ANY TREE OR GROUPS OF TREES TO BE RETAINED OR THOSE PROPOSED. NOR SHALL THE CONTRACTOR ALLOW THE DISPOSAL OF WASTE MATERIAL, SUCH AS PAINT, OIL SOLVENTS, ASPHALT, CONCRETE, MORTAR OR ANY OTHER MATERIAL HARMFUL TO THE LIFE OF A TREE WITHIN THE DRIP LINE OF ANY TREE OR GROUP OF TREES. NO ATTACHMENT, WIRES (OTHER THAN PROTECTIVE GUY WIRES), SIGNS, OR PERMITS MAY BE FASTENED TO A TREE.
16. ANY EXISTING TREES CREDITED TOWARDS REQUIRED BUFFERS OR LANDSCAPE REQUIREMENTS REMOVED FOR ANY REASON SHALL BE REPLACED WITH TREES MEETING CITY APPROVAL WITH REGARDS TO SPECIES AND SIZE.
17. ALL QUESTIONS CONCERNING THE PLAN AND/OR SPECIFICATIONS SHALL BE DIRECTED TO THE LANDSCAPE ARCHITECT (386) 872-7794.
18. ALL TREES AND PALMS MUST BE STAKED USING THE DETAILS PROVIDED OR ARBORGUY STAKING SYSTEMS. ANY STAKING SYSTEM NOT INCLUDED MUST BE APPROVED IN WRITING BY THE LANDSCAPE ARCHITECT.
19. ALL UNIMPROVED AREA NOT OTHERWISE PLANTED OR MULCHED SHALL BE SODDED WITH BAHIA UNLESS OTHERWISE NOTED ON THE LANDSCAPE PLAN.
20. THE CONTRACTOR SHALL GUARANTEE ALL INSTALLED PLANT MATERIAL FOR A PERIOD OF ONE (1) YEAR AFTER ACCEPTANCE IN WRITING BY OWNER OR OWNER'S REPRESENTATIVE. ALL PLANT MATERIAL SHALL BE WATERED REGULARLY AS NEEDED UNTIL ESTABLISHED. FOR TREES, UP TO ONE YEAR AND FOR SHRUBS/GROUNDCOVER, GENERALLY 2 -3 MONTHS.
21. REMOVAL OF ALL CONSTRUCTION DEBRIS, LIMEROCK, EXCESS OF BUILDERS SAND, CONCRETE AND MORTAR DEBRIS, EXISTING WEEDS AND GRASS, AND ALL FOREIGN MATERIALS IN THE PLANTING BED AND SOD AREAS SHALL BE REMOVED.
22. ALL EXISTING TREES AND PALMS WILL BE PROPERLY PRUNED AND CLEANED OF DEADWOOD, BROKEN BRANCHES, DEAD FROND AND VINES AS NEEDED. ALL STRUCTURAL PRUNING OF HARDWOOD TREES SHALL BE PERFORMED UNDER THE DIRECTION OF A CERTIFIED ARBORIST.
23. ALL NOXIOUS OR EXOTIC VEGETATION THAT DETRACTS FROM THE APPEARANCE OF THE EXISTING OR PLANTED VEGETATION WITHIN THE TREE PROTECTION AREA OR BUFFERS SHALL BE REMOVED. THE EDGE OF THE AREAS TO REMAIN NATURAL SHALL BE MULCHED 5' IN AND A CURVILINEAR BED LINE SHALL BE CREATED ADJACENT TO SODDED AREAS.

PLANT SPECIFICATION NOTES

1. PLANT DESCRIPTIONS ARE FOR MINIMUM ACCEPTABLE SPECIFICATIONS. ALL CRITERIA LISTED FOR CONTAINER SIZE, CALIPER, HEIGHT, SPREAD, ETC. MUST BE MET FOR PLANT MATERIAL ACCEPTANCE. FOR EXAMPLE, IF A THREE (3) GALLON SHRUB DOES NOT MEET THE HEIGHT OR SPREAD SPECIFICATION, IT WILL NOT BE ACCEPTED.
2. IF SPECIFIED PLANTS ARE UNAVAILABLE AT THE TIME OF CONSTRUCTION, CONTRACTOR MAY REPLACE SPECIFIED PLANTS WITH PLANTS APPROVED BY LANDSCAPE ARCHITECT AND CITY STAFF.

1 TREE PLANTING DETAIL

1" = 1'-0" P-CO-2022-205-01

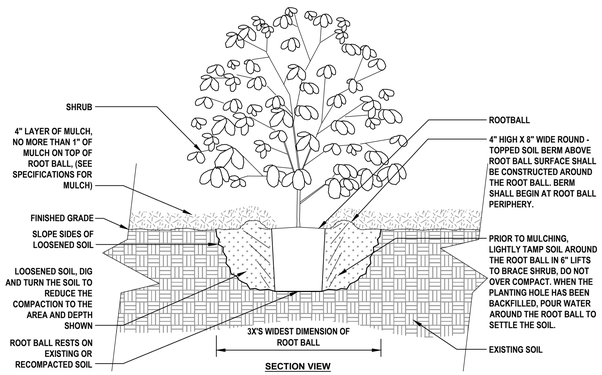

SECTION VIEW

NOTES:
1. SHRUBS SHALL BE OF QUALITY PRESCRIBED IN THE ROOT OBSERVATIONS DETAIL AND SPECIFICATIONS.
2. SEE SPECIFICATIONS FOR FURTHER REQUIREMENTS RELATED TO THIS DETAIL.

2 SMALL TREE PLANTING DETAIL

1" = 1'-0" P-CO-2022-205-03

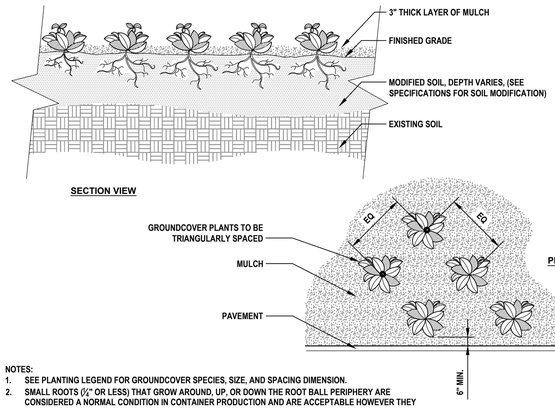

NOTES:
1. SEE PLANTING LEGEND FOR GROUNDCOVER SPECIES, SIZE, AND SPACING DIMENSION.
2. SMALL ROOTS (¼" OR LESS) THAT GROW AROUND, UP, OR DOWN THE ROOT BALL PERIPHERY ARE CONSIDERED A NORMAL CONDITION IN CONTAINER PRODUCTION AND ARE ACCEPTABLE HOWEVER THEY SHOULD BE ELIMINATED AT THE TIME OF PLANTING. ROOTS ON THE PERIPERHY CAN BE REMOVED AT THE TIME OF PLANTING. (SEE ROOT BALL SHAVING CONTAINER DETAIL).
3. SETTLE SOIL AROUND ROOT BALL OF EACH GROUNDCOVER PRIOR TO MULCHING.

3 SHRUB PLANTING DETAIL

NTS P-CO-2022-205-04

URBAN TREE FOUNDATION © 2014
OPEN SOURCE FREE TO USE

4 GROUNDCOVER LAYOUT

1/16" = 1'-0" P-CO-2022-205-02

REVISIONS

DATE	DESCRIPTION
4/11/23	CITY COMMENTS
5/12/23	CITY COMMENTS
5/18/23	BIDDING

1230 North US1, Suite 3
Ormond Beach, Florida 32174
Phone (386) 872-7794
www.Newkirk-Engineering.com
C.A. # 30209
L.C. # 26000584
C 2013
Civil Engineering
Transportation, CEI &
Landscape Architecture
NEWKIRK ENGINEERING INC.

LANDSCAPE DETAILS AND NOTES

REPLACEMENT FIRE STATION # 96

1020 DAYTONA AVENUE
HOLLY HILL, FL 32117

THIS DRAWING IS THE PROPERTY OF NEWKIRK ENGINEERING ANY USE OR REPRODUCTION IN WHOLE OR PART IS PROHIBITED WITHOUT THE EXPRESSED WRITTEN CONSENT OF NEWKIRK ENGINEERING COPYRIGHT 2013 ALL RIGHTS RESERVED

THIS ITEM HAS BEEN DIGITALLY SIGNED AND SEALED BY LAUREN ADAMS, RLA # 6667278 ON

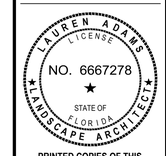

PRINTED COPIES OF THIS DOCUMENT ARE NOT CONSIDERED SIGNED AND SEALED AND THE SIGNATURE MUST BE VERIFIED ON ANY ELECTRONIC COPIES.

PROJECT No:	2022-205
DATE:	FEBRUARY 2023
DESIGN BY:	LAA
DRAWN BY:	CRA
CHECKED BY:	LAA
SCALE:	AS SHOWN

DRAWING NUMBER

L2

Attachment: Exhibit C - Fire Station #96 Bid Set (2023-R-55 : Fire Station Construction)

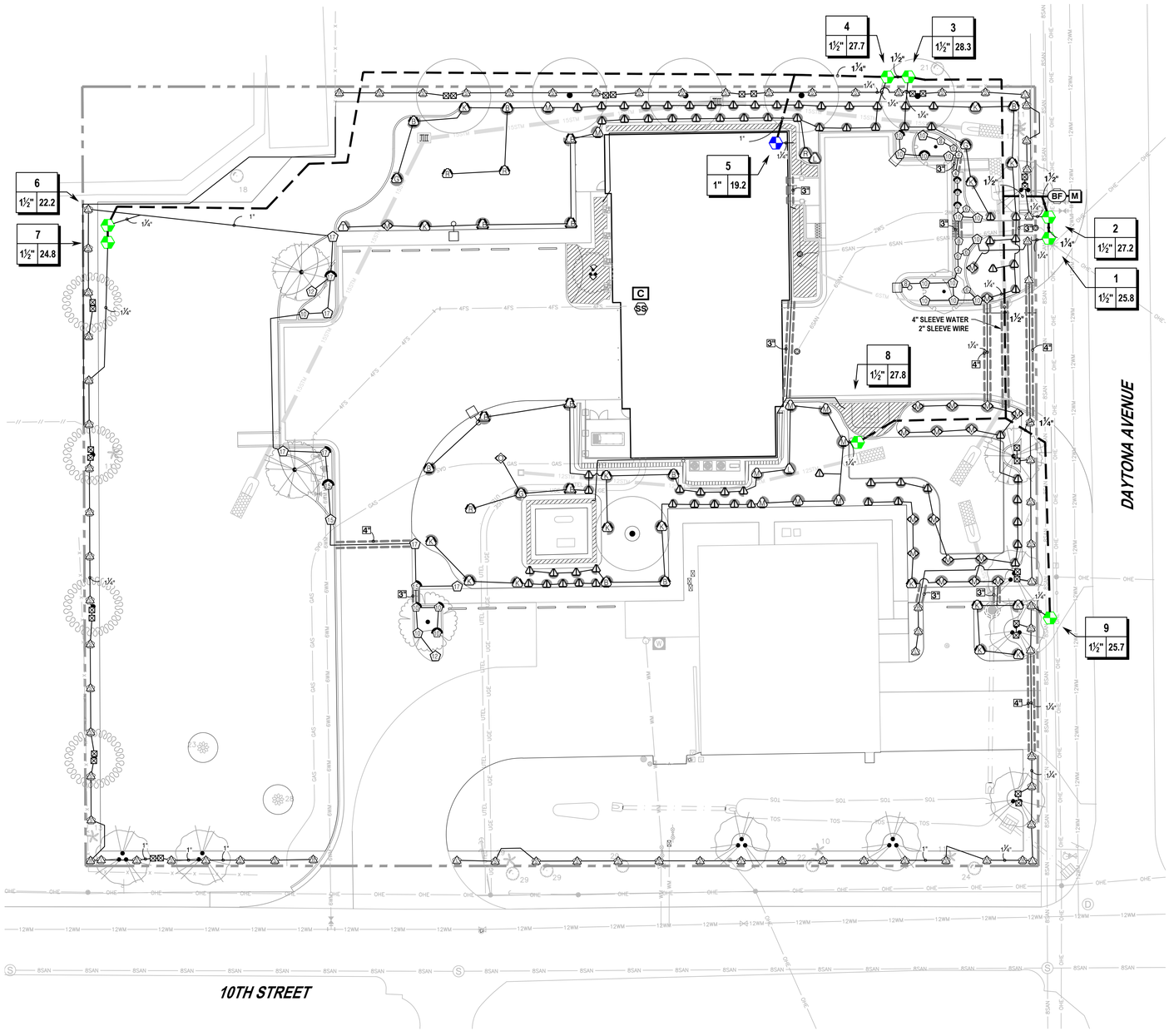

WATERING SCHEDULE

NUMBER	MODEL	TYPE	PRECIP	SUN	MON	TUE	WED	THU	FRI	SAT	IN./WEEK	MIN./WEEK	GAL./WEEK	GAL./DAY
1	HUNTER ICV-G-FS	SHRUB SPRAY	2.0 in/h			12 min			12 min		0.75	23	594	297
2	HUNTER ICV-G-FS	SHRUB SPRAY	1.85 in/h			13 min			13 min		0.75	25	680	340
3	HUNTER ICV-G-FS	TURF ROTARY	0.79 in/h			57 min			57 min		1.5	114	3,225	1,612
4	HUNTER ICV-G-FS	TURF ROTARY	0.67 in/h			68 min			68 min		1.5	135	3,736	1,868
5	HUNTER ICV-G-FS	AREA FOR DRIPLINE	1.66 in/h			14 min			14 min		0.75	28	536	268
6	HUNTER ICV-G-FS	SHRUB SPRAY	1.35 in/h			17 min			17 min		0.75	34	753	377
7	HUNTER ICV-G-FS	SHRUB SPRAY	1.8 in/h			13 min			13 min		0.75	25	619	309
8	HUNTER ICV-G-FS	TURF ROTARY	0.54 in/h			85 min			85 min		1.5	169	4,697	2,349
9	HUNTER ICV-G-FS	SHRUB SPRAY	1.75 in/h			13 min			13 min		0.75	26	668	334
		TOTALS:				292			292			579	15,509	7,755

IRRIGATION SCHEDULE

SYMBOL	MANUFACTURER/MODEL	QTY	PSI
2Q 2H 4Q 4H 6Q 6H	HUNTER PROS-12-PRS30-CV-F SHORT RADIUS NOZZLES	3	30
EST LCS RCS CST SST	HUNTER PROS-12-PRS30-CV-F 5` STRIP SPRAY	76	30
Q T H F	HUNTER PROS-12-PRS30-CV-F 10` RADIUS	5	30
Q T H TT TQ F	HUNTER PROS-12-PRS30-CV-F 15` RADIUS	2	30
Q H	HUNTER PROS-12-PRS30-CV-F 17` RADIUS	2	30
	HUNTER PROS-12-PRS30-CV-F ADJUSTABLE ARC	32	30
	HUNTER MP CORNER PROS-06-PRS40-CV	1	40
LST SST RST	HUNTER MP STRIP PROS-06-PRS40-CV	2	40
	HUNTER MP1000 PROS-06-PRS40-CV	10	40
	HUNTER MP2000 PROS-06-PRS40-CV	22	40
	HUNTER MP3000 PROS-06-PRS40-CV	7	40
	HUNTER MP3500 PROS-06-PRS40-CV	6	40
800 A 800 F	HUNTER MP800SR PROS-06-PRS40-CV	69	40
	HUNTER MP815 PROS-06-PRS40-CV	19	40
25 50 10 20	HUNTER PCB 10	28	30

SYMBOL	MANUFACTURER/MODEL	QTY
0.5 1.0 2.0 4.0 6.0	HUNTER HE-B 10HE-B	2
	AREA TO RECEIVE DRIPLINE HUNTER HDL-06-12-R	1,906 L.F.

SYMBOL	MANUFACTURER/MODEL/DESCRIPTION	QTY
	HUNTER ICV-G-FS 1", 1-1/2", 2", AND 3" PLASTIC ELECTRIC REMOTE CONTROL VALVES, GLOBE CONFIGURATION, WITH NPT THREADED INLET/OUTLET, FOR COMMERCIAL/MUNICIPAL USE. WITH FILTER SENTRY.	9
BF	ZURN 350XL 1-1/2" DOUBLE CHECK VALVE ASSEMBLY W/ EZSWAP INSERT.	1
C	HUNTER I2C-1600-PL 16 STATION OUTDOOR MODULAR CONTROLLER. WITH ONE ICM-800 MODULE. COMMERCIAL USE. PLASTIC CABINET.	1
SS	HUNTER SOLAR-SYNC SOLAR, RAIN FREEZE SENSOR WITH OUTDOOR INTERFACE, CONNECTS TO HUNTER PCC, PRO-C, AND I-CORE CONTROLLERS, INSTALL AS NOTED. INCLUDES 10 YEAR LITHIUM BATTERY AND RUBBER MODULE COVER, AND GUTTER MOUNT BRACKET. WIRED.	1
M	WATER METER 1-1/2" 1.5" WATER METER	1
	IRRIGATION LATERAL LINE: PVC CLASS 160 SDR 26	3,612 L.F.
	IRRIGATION MAINLINE: PVC CLASS 200 SDR 21	644.3 L.F.
	PIPE SLEEVE: PVC SCHEDULE 40	236.4 L.F.

Valve Callout

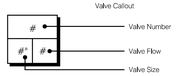

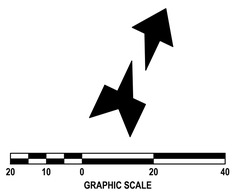

REVISIONS

DATE	DESCRIPTION
4/11/23	CITY COMMENTS
5/12/23	CITY COMMENTS
5/18/23	BIDDING

1230 North US1, Suite 3
Ormond Beach, Florida 32174
Phone (386) 672-7794
www.Newkirk-Engineering.com
C.A. # 30209
L.C. # 26000584
C 2013
Civil Engineering
Transportation, CEI &
Landscape Architecture
NEWKIRK ENGINEERING INC.

IRRIGATION PLAN
REPLACEMENT FIRE STATION # 96
1020 DAYTONA AVENUE
HOLLY HILL, FL 32117

THIS DRAWING IS THE PROPERTY OF NEWKIRK ENGINEERING ANY USE OR REPRODUCTION IN WHOLE OR PART IS PROHIBITED WITHOUT THE EXPRESSED WRITTEN CONSENT OF NEWKIRK ENGINEERING COPYRIGHT 2013 ALL RIGHTS RESERVED

THIS ITEM HAS BEEN DIGITALLY SIGNED AND SEALED BY LAUREN ADAMS, RLA # 6667278 ON

LAUREN ADAMS LICENSE NO. 6667278 STATE OF FLORIDA LANDSCAPE ARCHITECT

PRINTED COPIES OF THIS DOCUMENT ARE NOT CONSIDERED SIGNED AND SEALED AND THE SIGNATURE MUST BE VERIFIED ON ANY ELECTRONIC COPIES.

PROJECT No:	2022-205
DATE:	FEBRUARY 2023
DESIGN BY:	LAA
DRAWN BY:	BWV
CHECKED BY:	LAA
SCALE:	1" = 20'

DRAWING NUMBER

L3

Attachment: Exhibit C - Fire Station #96 Bid Set (2023-R-55 : Fire Station Construction)

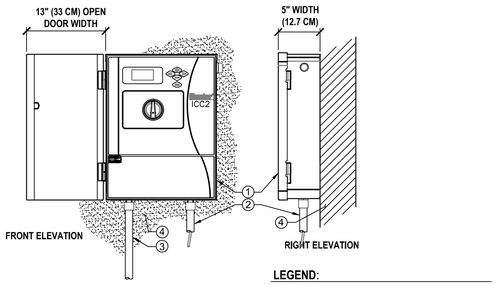

NOTE:
MOUNT CONTROLLER LCD SCREEN AT EYE LEVEL, CONTROLLER SHALL BE HARD-WIRED TO GROUNDED 110 VAC POWER SOURCE

LEGEND:

1. IRRIGATION CONTROLLER (12C-800-M) PER PLAN
2. IRRIGATION CONTROL WIRE IN CONDUIT SIZE AND TYPE PER LOCAL CODES
3. ELECTRICAL SUPPLY CONDUIT CONNECT TO POWER SOURCE, J-BOX INSIDE CONTROLLER
4. ADJACENT SURFACE TO MOUNT CONTROLLER PER PLAN

1 HUNTER ICC2 CONTROLLER

1/8" = 1'-0" P-CO-2022-205-21

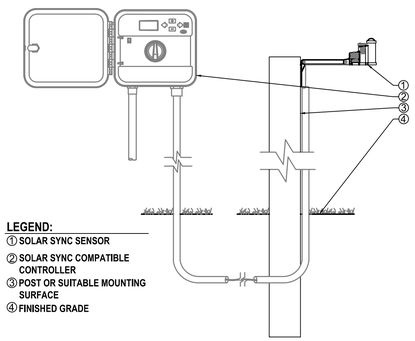

LEGEND:

1. SOLAR SYNC SENSOR
2. SOLAR SYNC COMPATIBLE CONTROLLER
3. POST OR SUITABLE MOUNTING SURFACE
4. FINISHED GRADE

2 HUNTER SOLAR SYNC SENSOR

1/8" = 1'-0" P-CO-2022-205-22

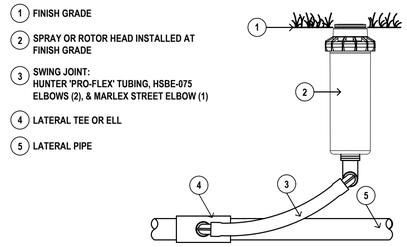

1. FINISH GRADE
2. SPRAY OR ROTOR HEAD INSTALLED AT FINISH GRADE
3. SWING JOINT: HUNTER 'PRO-FLEX' TUBING, HSBE-075 ELBOWS (2), & MARLEX STREET ELBOW (1)
4. LATERAL TEE OR ELL
5. LATERAL PIPE

3 SPRAY HEAD AND ROTOR DETAIL

1/4" = 1'-0" P-CO-2022-205-17

LEGEND

1. HUNTER REMOTE CONTROL VALVE (ICV) WITH FLOW CONTROL
2. IRRIGATION VALVE BOX: HEAT STAMP LID WITH 'RCV' IN 2" LETTERS
3. WATERPROOF CONNECTORS (2)
4. 18"-24" COILED WIRE TO CONTROLLER
5. FINISH GRADE AT ADJACENT SURFACE (TURF OR MULCH)
6. SCH. 80 CLOSE NIPPLE, SIZE PER RCV
7. PVC SLIP X FPT ADAPTOR
8. BRICK SUPPORTS (4)
9. FILTER FABRIC - WRAP TWICE AROUND BRICK SUPPORTS
10. 3/4" WASHED GRAVEL - 4" MIN. DEPTH
11. IRRIGATION LATERAL
12. MAINLINE AND FITTINGS

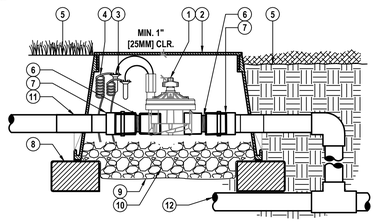

4 HUNTER REMOTE CONTROL VALVE (ICV)

1 1/2" = 1'-0" P-CO-2022-205-20

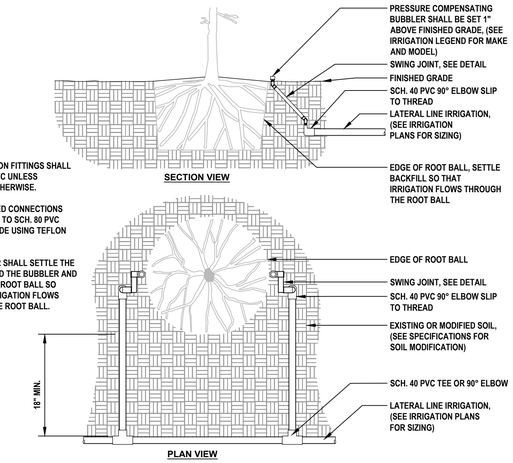

NOTES:
1. ALL IRRIGATION FITTINGS SHALL BE SCH. 40 PVC UNLESS SPECIFIED OTHERWISE.
2. ALL THREADED CONNECTIONS FROM SCH. 40 TO SCH. 80 PVC SHALL BE MADE USING TEFLON TAPE.
3. CONTRACTOR SHALL SETTLE THE AREA AROUND THE BUBBLER AND EDGE OF THE ROOT BALL SO THAT ALL IRRIGATION FLOWS THROUGH THE ROOT BALL.

5 IRRIGATION BUBBLER (2) W/ LAYOUT

3/4" = 1'-0" P-CO-2022-205-05

URBAN TREE FOUNDATION © 2014 OPEN SOURCE FREE TO USE

NOTES:
1. AIR RELIEF VALVE (PLD-AVR) INSTALLED IN VALVE BOX AT OPTIMAL HIGHEST POINT FROM CONTROL ZONE KIT. MULTIPLE AIR RELIEF VALVES MAY BE NEEDED TO ACCOMMODATE DIFFERENCES IN GRADE.
2. ECO-INDICATOR TO BE INSTALLED AT OPTIMAL FURTHEST POINT FROM CONTROL ZONE KIT IN CLEAR VIEW WHEN POPPED UP.
3. FLUSH POINT TO BE INSTALLED AT OPTIMAL FURTHEST POINT FROM CONTROL ZONE KIT TO ALLOW FOR MAXIMUM DEBRIS FLUSH IN SYSTEM.

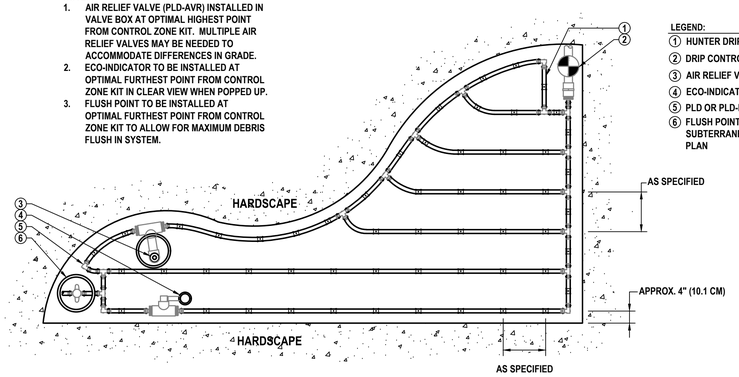

LEGEND:

1. HUNTER DRIPLINE PER PLAN
2. DRIP CONTROL ZONE KIT PER PLAN
3. AIR RELIEF VALVE IN VALVE BOX
4. ECO-INDICATOR ON SWING ARM
5. PLD OR PLD-LOCK FITTING (TYP.)
6. FLUSH POINT (PLD-BV) IN SUBTERRANEAN BOX PER PLAN

6 DRIPLINE FOR IRREGULAR BED

1 1/2" = 1'-0" P-CO-2022-205-11

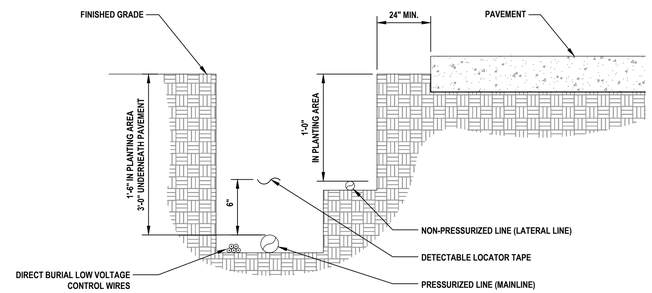

NOTES:
1. SEE IRRIGATION LEGEND FOR MAINLINE AND LATERAL LINE PIPE SIZE AND TYPE.
2. DIRECT BURIAL CONTROL WIRES SHALL BE INSTALLED IN SCH. 40 PVC ELECTRICAL CONDUIT IF REQUIRED.
3. 2-WIRE IRRIGATION WIRE SHALL BE INSTALLED IN SCH. 40 PVC ELECTRICAL CONDUIT.
4. DETECTABLE LOCATOR TAPE SHALL BE LOCATED SIX INCHES (6") ABOVE THE ENTIRE MAINLINE RUN.

7 IRRIGATION TRENCHING

1 1/2" = 1'-0" P-CO-2022-205-06

URBAN TREE FOUNDATION © 2014 OPEN SOURCE FREE TO USE

IRRIGATION NOTES

1. THE CONTRACTOR SHALL VERIFY THE EXISTENCE AND LOCATION OF ALL EXISTING UTILITIES AND CONDITIONS PRIOR TO COMMENCEMENT OF WORK.
2. *CHECK PRESSURE AND GPM OF WATER SUPPLY BEFORE BEGINNING JOB AND REPORT FINDING TO LANDSCAPE ARCHITECT. LANDSCAPE ARCHITECT WILL MAKE ANY ADJUSTMENT NECESSARY TO MAKE SYSTEM WORK AT ITS BEST.*
3. THE PLAN IS SCHEMATIC ONLY. THE CONTRACTOR SHALL INSTALL PIPING IN A MINIMUM NUMBER OF TRENCHES AND SHALL INSTALL PIPE IN A MINIMUM LENGTH.
4. IRRIGATION LINES ARE SHOWN DIAGRAMMATICALLY AND ARE INTENDED TO SHOW DISTRIBUTION ZONES ONLY. LINES LOCATED UNDER PAVEMENT SHALL BE KEPT TO A MINIMUM AND ALL PIPING UNDER PAVED AREAS SHALL BE SLEEVED.
5. WHEN INSTALLING IRRIGATION PIPING IN ISLAND AND OTHER NARROW PLANTING AREAS RUN PIPING CLOSE TO CURB AND NOT DOWN THE MIDDLE OF THE PLANTING AREA. (BEFORE DOING IRRIGATION GET A COPY OF THE LANDSCAPE PLAN AND KEEP IRRIGATION LINES OUT OF PLANTING AREAS WHERE POSSIBLE.)
6. QUANTITIES FOR IRRIGATION MATERIALS MAY BE ESTIMATES. CONTRACTOR SHALL DO THEIR OWN TAKEOFF.
7. INSTALL SLEEVE PIPING WHERE SHOWN ON THE DRAWINGS AT THE PROPER DEPTH. ALL SLEEVE PIPE SHALL BE SCHEDULE 40 PVC PIPE INSTALLED A MINIMUM OF 20" BELOW FINISHED PAVING GRADES. ALL SLEEVES WHEN PLACED IN FIELD ARE TO BE LOCATED BY A METAL PIPE AT EACH END AND LOCATED FROM TWO STATIONARY POINTS BY TAPE MEASUREMENTS.
8. ALL LATERAL PIPE SHALL BE INSTALLED A MINIMUM OF 12" BELOW GRADE.
9. ALL TRENCHING SHALL BE KEPT OUT OF THE DRIP LINE AREA OF ALL EXISTING TREES. USE RADIAL LINES OR TUNNELING WHEN NECESSARY TO ENCROACH INTO THE DRIP LINE AREA OF TREES.
10. LOCATE ALL VALVES AND OTHER IRRIGATION EQUIPMENT IN PLANT BED AREAS WITHIN THE PROJECT LIMITS FOR CONCEALMENT PURPOSES.
11. RISERS ARE TO BE HIDDEN COMPLETELY IN SHRUBBERY OR PAINTED BLACK AND IN NO CASE BE HIGHER THAN THE SHRUBBERY INSTALLED.
12. ALL VALVES SHALL BE INSTALLED IN VALVE BOXES. PROVIDE A 6" GRAVEL SUMP AT THE BOTTOM OF ALL VALVE BOXES AND INSTALL 1/2" TO 1" DIAMETER GRAVEL AT THE BOTTOM OF THE VALVE PIT.
13. IRRIGATION SHALL MEET ALL APPLICABLE CURRENT MUNICIPAL, COUNTY, STATE OR FEDERAL CODES, ORDINANCES AND REGULATIONS THAT HAVE JURISDICTION.
14. THERE SHALL BE A MINIMUM OF FOUR (4) INCHES BETWEEN THE IRRIGATION EQUIPMENT AND PAVEMENT.
15. THERE SHALL BE A MINIMUM OF TWELVE (12) INCHES BETWEEN THE IRRIGATION EQUIPMENT AND STRUCTURES.
16. THERE SHALL BE NO DIRECT SPRAY ON WALKWAYS, BUILDINGS, DRIVES OR ROADWAYS.
17. ALL TURF IRRIGATION HEADS SHALL PROVIDE 100% HEAD TO HEAD COVERAGE.
18. ALL FITTINGS SHALL BE SCHEDULE 40 PVC.
19. ALL SPRAY HEADS ARE TO BE A MINIMUM OF 6" POP-UP AND ALL HEADS IN PLANTING AREAS TO BE 12" POP-UP OR RISERS. RISERS SHALL BE PAINTED HUNTER GREEN.
20. ALL DRIP ZONES SHALL INCLUDE AN AIR RELIEF VALVE INSTALLED IN A VALVE BOX AT OPTIMAL HIGHEST POINT FROM THE CONTROL ZONE KIT. MULTIPLE AIR RELIEF VALVES MAY BE NEEDED TO ACCOMMODATE DIFFERENCES IN GRADE. ECO-INDICATOR TO BE INSTALLED AT OPTIMAL FURTHEST POINT FROM CONTROL ZONE KIT IN CLEAR VIEW WHEN POPPED UP. FLUSH POINT TO BE INSTALLED AT OPTIMAL FURTHEST POINT FROM CONTROL ZONE KIT TO ALLOW FOR MAXIMUM DEBRIS FLUSH IN SYSTEM.
21. ALL DRIP ROWS SHALL BE SPACED A MINIMUM OF 12" APART AND A MAXIMUM OF 18" APART.
22. ELECTRICAL TO CONTROLLER SHALL BE SUPPLIED BY ELECTRICAL CONTRACTOR (NOT IRRIGATION CONTRACTOR).
23. TREE PROTECTION AREA. HAND TRENCH ALL PIPING IN THESE AREAS TO AVOID IMPACTING THE CRITICAL PROTECTION ZONE OF THE EXISTING TREES TO REMAIN (TYP).
24. CONTRACTOR TO PROVIDE CONTROLLER HANDBOOK AND OPERATION INSTRUCTIONS, AS-BUILT ZONE DIAGRAM, INCLUDING LOCATIONS AND SIZE OF COMPONENTS, AND SOLID MOISTURE SENSOR PROBE LOCATION IF APPLICABLE, PRECIPITATION RATES FOR EACH ZONE, AND SCHEDULE RUN TIMES, WINTER AND SUMMER TO THE OWNER.

SYSTEM MINIMUM REQUIREMENTS

1. THIS SYSTEM ASSUMES A MINIMUM PRESSURE OF 65 PSI.
2. IF THE WATER SUPPLY DOES NOT MEET THE MINIMUM PRESSURE, A BOOSTER PUMP MAY BE REQUIRED FOR PROPER SYSTEM FUNCTION.

PLANT ESTABLISHMENT

1. IRRIGATE EVERY DAY FOR ONE MONTH.
2. IRRIGATE EVERY OTHER DAY FOR ONE ADDITIONAL MONTH.
3. IRRIGATE TWICE A WEEK THEREAFTER OR MORE OFTEN DURING DRY PERIODS IF PLANTS ARE SHOWING SIGNS OF DISTRESS SUCH AS WILTING OR BROWNING.
4. ENSURE RAIN SENSOR IS OPERATING CORRECTLY AND SYSTEM IS NOT WATERING ON DAYS WHEN IT RAINS.

REVISIONS

DATE	DESCRIPTION
4/11/23	CITY COMMENTS
5/12/23	CITY COMMENTS
5/18/23	BIDDING

1230 North US1, Suite 3
Ormond Beach, Florida 32174
Phone (386) 672-7794
www.Newkirk-Engineering.com
C.A. # 30209
L.C. # 26000584
C 2013
Civil Engineering
Transportation, CEI &
Landscape Architecture
NEWKIRK ENGINEERING INC.

IRRIGATION DETAILS AND NOTES

REPLACEMENT FIRE STATION # 96

1020 DAYTONA AVENUE
HOLLY HILL, FL 32117

THIS DRAWING IS THE PROPERTY OF NEWKIRK ENGINEERING ANY USE OR REPRODUCTION IN WHOLE OR PART IS PROHIBITED WITHOUT THE EXPRESSED WRITTEN CONSENT OF NEWKIRK ENGINEERING COPYRIGHT 2013 ALL RIGHTS RESERVED

THIS ITEM HAS BEEN DIGITALLY SIGNED AND SEALED BY LAUREN ADAMS, RLA # 6667278 ON



PRINTED COPIES OF THIS DOCUMENT ARE NOT CONSIDERED SIGNED AND SEALED AND THE SIGNATURE MUST BE VERIFIED ON ANY ELECTRONIC COPIES.

PROJECT No:	2022-205
DATE:	FEBRUARY 2023
DESIGN BY:	LAA
DRAWN BY:	BWV
CHECKED BY:	LAA
SCALE:	AS SHOWN

DRAWING NUMBER

L4

Attachment: Exhibit C - Fire Station #96 Bid Set (2023-R-55 : Fire Station Construction)

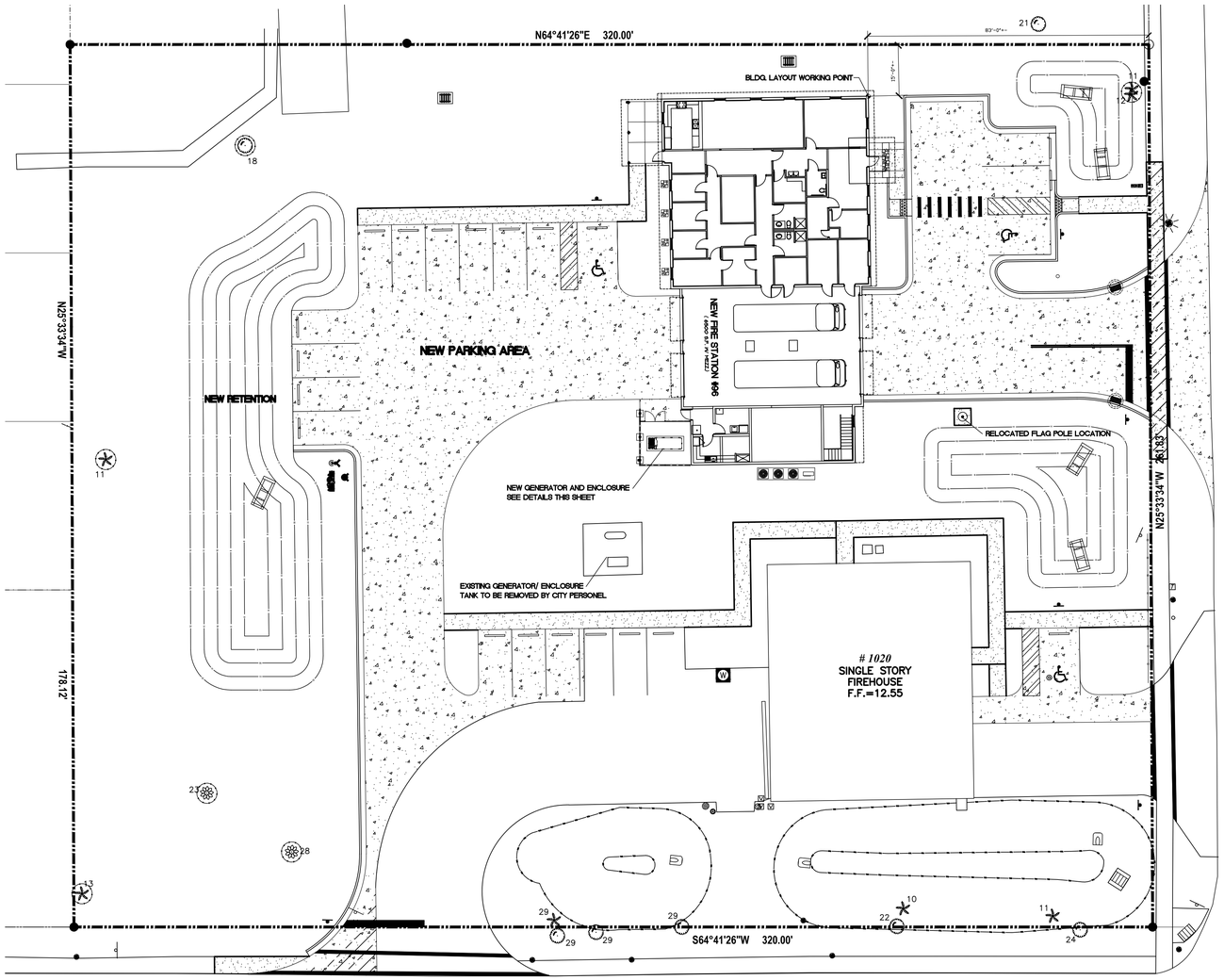

SITE DATA TABLE

ZONING:	B-7
EXISTING USE:	VACANT
PROPOSED USE:	FIRE STATION (R-2 / S-2)
TOTAL ACREAGE:	1.57 ACRES
BUILDING SQ. FT.:	6,075 SQ. FT.
* IMPERVIOUS SURFACE:	27,348 SQ. FT. (INCL. BLDG.) 40% SITE
TOTAL LANDSCAPE AREA:	44,300 SQ. FT.
SETBACKS:	AS INDICATED ON PLANS

BUILDING DATA TABLE

CONSTRUCTION TYPE:	TYPE III-B, UNPROT., FULLY SPRINKLERED
STORIES:	1
BUILDING AREA:	6,504 SQ. FT.
FINISHED FLOOR ELEV.:	+12.60'
BUILDING HEIGHT:	25'-0" (TOP OF GARAGE ROOF)

PARKING CALCULATION

NOTE:

** PARKING REQUIREMENT IS BASED ON THE GREN SUPPORT AREA (9382 S.F. / 250) = 13.5 CARS
PLUS THE EQUIPMENT STORAGE AREA, (NOT INC APPARATUS BAY)
STORAGE AREA (1186 SF < 1000 SF) = 2 CARS

REQUIRED PARKING (13.5 + 2 = 15.5) 16 CARS

PARKING PROVIDED IN LOTS - 15 (INCL. 3 HANDICAP)

(ADDITIONAL PARKING)
APPARATUS BAY PARKING - 2 FIRE DEPT. VEHICLES



DAYTONA AVE. VIEW NOT TO SCALE
REPLACEMENT FIRE STATION

SITE PLAN SCALE: 1" = 20'
REPLACEMENT FIRE STATION
SEE CIVIL PLANS FOR MORE INFORMATION

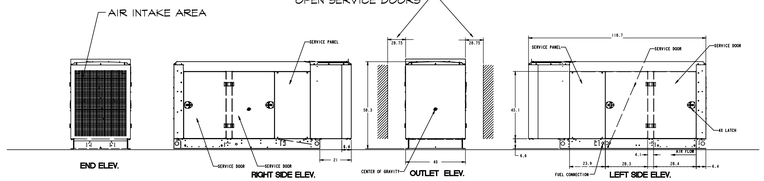

GENERATOR ELEVATIONS SCALE: 1/4" = 1'-0"
NATURAL GAS FIRED SYS.

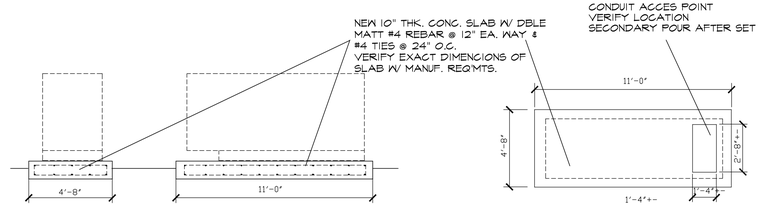

GENERATOR SLAB SECTIONS SCALE: 1/4" = 1'-0"
UNIT ABOVE DASHED IN

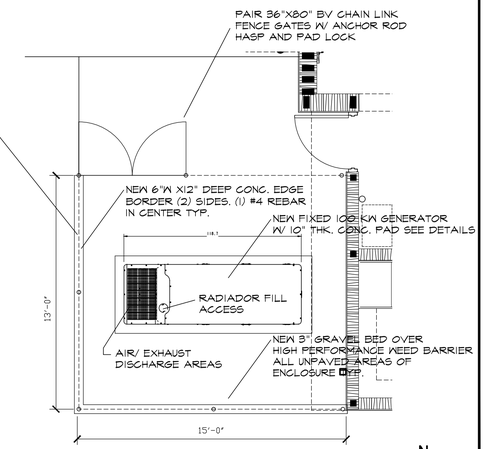

GENERATOR PLAN SCALE: 1/4" = 1'-0"
NATURAL GAS FIRED SYS.

HALL & OGLE
ARCHITECTS, INC.
208 MAGNOLIA AVENUE
DAYTONA BEACH, FLORIDA 32114
www.hoarchitects.com
PH.(386) 255-6163
FAX.(386)257-5650
AA-C000925

SEAL

REVISIONS

NO.	DATE	DOCUMENT HISTORY DESCRIPTION

Replacement Fire Station # 96
City of Holly Hill, Fl.
1020 Daytona Avenue
Holly Hill , Florida

ARCHITECT OF RECORD
JOHN E. HALL AR0010727
DAVID D. OGLE AR93986

DESIGNED BY	DRAWN BY
JEH	SC/ JH
ISSUE DATE	AE PROJECT NUMBER
18-MAY-2023	2204

SHEET TITLE
SITE PLAN

DRAWING NO.
A1.0

Attachment: Exhibit C - Fire Station #96 Bid Set (2023-R-55 : Fire Station Construction)

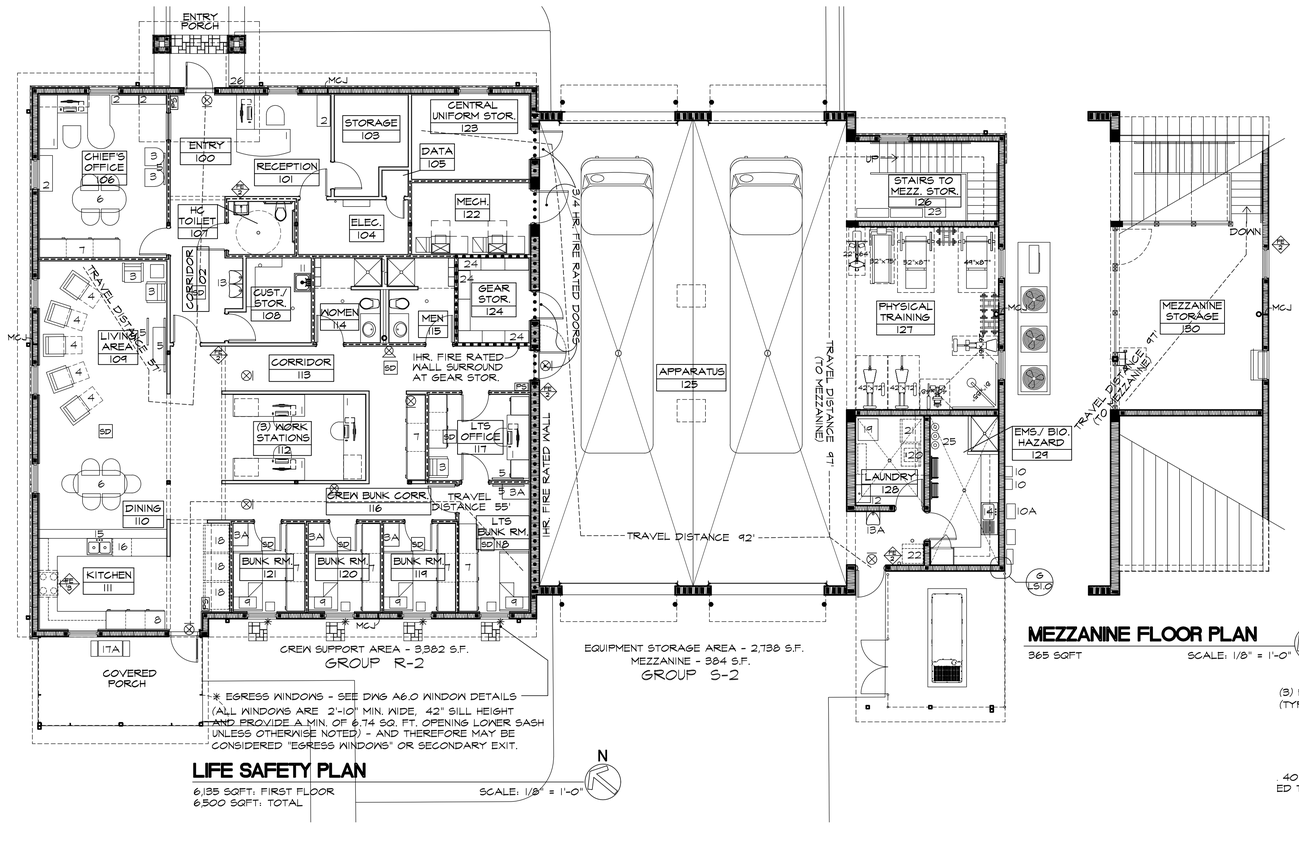

* EGRESS WINDOWS - SEE DWG A6.0 WINDOW DETAILS (ALL WINDOWS ARE 2'-10" MIN. WIDE, 42" SILL HEIGHT AND PROVIDE A MIN. OF 6.74 SQ. FT. OPENING LOWER SASH UNLESS OTHERWISE NOTED) - AND THEREFORE MAY BE CONSIDERED "EGRESS WINDOWS" OR SECONDARY EXIT.

LIFE SAFETY PLAN

6,135 SQFT: FIRST FLOOR
6,500 SQFT: TOTAL

SCALE: 1/8" = 1'-0"

MEZZANINE FLOOR PLAN

365 SQFT

SCALE: 1/8" = 1'-0"

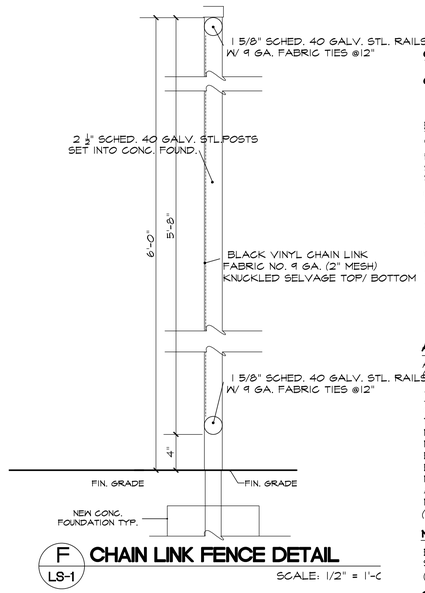

F LS-1 **CHAIN LINK FENCE DETAIL** SCALE: 1/2" = 1'-0"

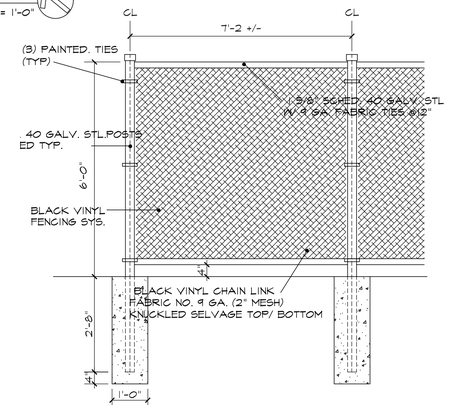

E LS-1 **DBLE. GATE DETAIL** SCALE: 1/2" = 1'-0"
SEE SITE PLAN FOR LOCATION (1 REQ'D)

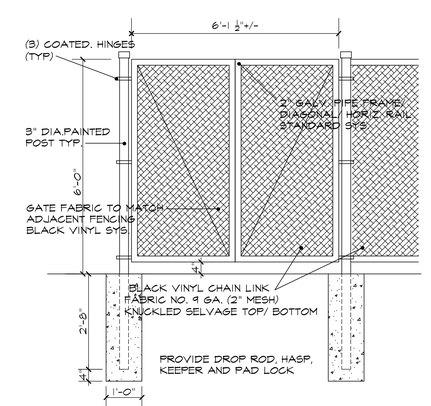

D LS-1 **FENCE DETAIL** SCALE: 1/2" = 1'-0"
SEE SITE PLAN FOR LOCATION

CODE REVIEW SUMMARY
LIFE SAFETY DATA :

CONSTRUCTION DATA
GENERAL CONSTRUCTION NOTES PER (F.B.C. 2020)

OCCUPANCY TYPE: MIXED USE
RESIDENTIAL R-2 (LODGING & ROOMING OCCUPANCY) AND GROUP S2. STORAGE OF FIRE EQUIP. & VEHICLES

BUILDING SIZE : OVERALL GROSS
ONE STORY, 6,504 GROSS SQUARE FEET (TOTAL)

RESIDENTIAL, 3,382 G.S.F.
STORAGE, 2,738 G.S.F.
STORAGE, 384 G.S.F. MEZZANNIE

OCCUPANCY LOAD :

RESIDENTIAL, 3,382 S.F. / 200 S.F. = 16.9
STORAGE, 3,122 S.F. / 300 S.F. = 10.4

TOTAL OCCUPANCY LOAD = 16.9 + 10.4 = (27.3) 28 PEOPLE
RESIDENTIAL OCCUPANCY LOAD = OWNER CERTIFIED (6) MAX.

TYPE OF CONSTRUCTION :
TYPE III-B UNPROTECTED/ FULLY SPRINKLERED. (STORAGE) SEPARATED BY 1 HR. RATED WALL FROM;
TYPE III UNPROTECTED/ FULLY SPRINKLERED. (RESIDENTIAL)

ALLOWABLE BUILDING AREA :
ALLOWABLE BLDG. AREA : 1 STORY (RESIDENTIAL) 36,000 SF. (F.B.C. TABLE 500)

MEANS OF EGRESS :
OCCUPANCY COUNT : 28 OCCUPANTS
TABLE 1004
MAX. TRAVEL DISTANCE TO EXIT = 325 FT.
MAX. DEAD END CORRIDOR LENGTH = 20' FT.
EGRESS WIDTH PER PERSON SERVED=0.2" (F.B.C. TABLE 1004)
EGRESS WIDTH TO SERVE OCCUPANTS 28 x 0.2" = 5.6"
MIN. CORRIDOR WIDTH = 44"
ACTUAL CORRIDOR WIDTH = 48"(MIN.)
MIN. NUMBER OF EXITS REQ'D = 2
(ALL NEW DOORS TO BE 3'-0" WIDE UNLESS OTHERWISE NOTED)

MINIMUM FIRE RESISTANCE :
EXIT ACCESS CORRIDORS LESS THAN 10 OCCUPANTS, SPRINKLERED = 0 HR
(FBC. 704.2.4)

OCCUPANCY SEPARATION REQUIREMENTS:
RESIDENTIAL R2 / STORAGE S2 = 1 HR. (F.B.C. T704.1)
ALL DOORS IN SEPARATING WALL TO BE 3/4 HOUR

EXTERIOR WALL OPENING REQUIREMENTS:
PER TABLE 602, HORIZONTAL SEPARATION OVER 15' FROM PROPERTY LINE, UNPROTECTED WALL OPENINGS.

HANDICAPPED ACCESSIBILITY :
ALL PUBLIC SPACES WITHIN THE NEW FACILITY WILL BE DESIGNED TO PROVIDE ACCESSIBILITY FOR THE HANDICAPPED PER DCA'S REQUIREMENTS IN FLORIDA ACCESSIBILITY CODE FOR BUILDING CONSTRUCTION. (PER CH 11 - F.B.C.)

DOOR HARDWARE IN THE MEANS OF EGRESS, INCLUDING EXIT ACCESS DOORS, WILL BE OPERABLE FROM THE INSIDE WITHOUT SPECIAL KEY, EFFORT OR KNOWLEDGE, PER FBC 1991 SECTION 1012.1.1. THE HARDWARE SHALL BE LEVER HANDLE OR EQUAL FOR ALL NEW DOORS PER FLORIDA STATUTE

CHANGES IN ELEVATION OF 1/4" TO 1/2" SHALL BE BEVELED AT A SLOPE OF 1 TO 2 OR LESS. CHANGES IN ELEVATION OF 1/2" TO 21" SHALL BE RAMPED WITH REQUIRED PLATFORMS AND RAILINGS (PER CH 11 F.B.C.)

ACCESSIBLE TOILET IS PROVIDED FOR USE BY PUBLIC, LOCATED ADJACENT TO PUBLIC AREAS AND LOBBY.

FIRE PROTECTION :

ENTIRE BUILDING TO BE FULLY SPRINKLERED.

EMERGENCY LIGHTING: NOTE, ALL BUILDING LIGHTING IS CONNECTED TO THE STAND-BY EMERGENCY GENERATOR.

SD SMOKE DETECTORS IN ALL SLEEPING ROOMS AND LIVING SPACES. SMOKE DETECTORS ARE POWERED BY THE BUILDING ELEC. SYSTEM, INTERCONNECTED, AND PROVIDED WITH BATTERY BACK-UP.

PS FIRE ALARM - PULL STATION

HORN / STROBE SIGNAL DEVICE

ILLUMINATED EXIT SIGNS

FE 2 SURFACE MOUNTED FIRE EXTINGUISHER SEE SPEC. FOR FIRE EXTINGUISHER REQ'MTS. FIRE EXTINGUISHERS SHALL BE PROVIDED (BY OWNER) IN CONSPICUOUS POSITIONS AND IN SUCH NUMBERS SO TRAVEL DISTANCE WILL NOT BE GREATER THAN 75 FEET. WALL MOUNTING WILL BE 5'-0" TO TOP OF EXTINGUISHER (MAX.)

FE 3 DOMESTIC RANGE - FIRE SUPPRESSION SYSTEM GUARDIAN III - MODEL G 300-A (2-JET CHEMICAL SYS.) MANUF.-TWENTY FIRST CENTURY INT. FIRE EQUIPMENT & SERVICES CORP. 3249 WEST STORY RD. IRVING, TX. 75038 (OR APPROVED EQUAL.) AS APPROVED BY THE HOLLY HILL FIRE DEPARTMENT

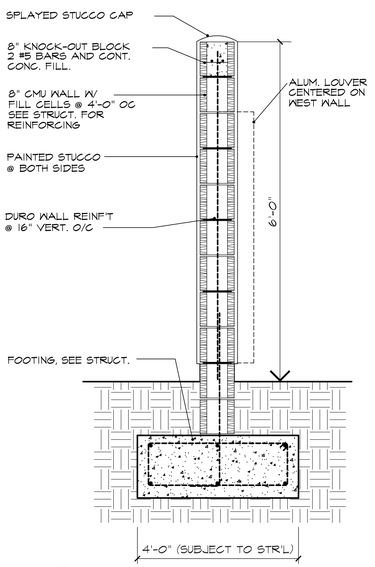

A LS-1 **ALT. SCREEN WALL SECTION**
GENERATOR ENCLOSURE SCALE: 1/2" = 1'-0"
NOTES: ALSO PROVIDE PAIR 36"X 80" IMPACT RATED DOORS/ FRAMES (PAINTED) W/ ALL HARDWARE
PROVIDE 48"X54" IMPACT RATED ALUM. LOUVER SYSTEM, W/ PRECAST LINTEL ABOVE AND FILLED CELLS

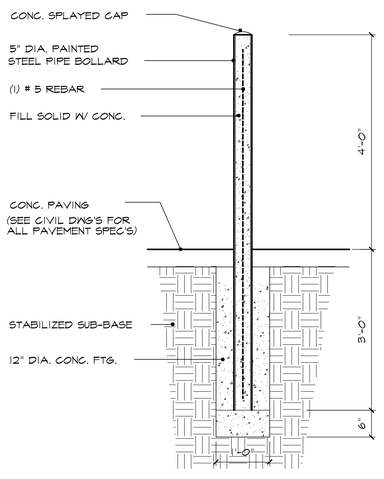

B LS-1 **BOLLARD DETAIL** SCALE: 1/2" = 1'-0"
ADJ. TO GARAGE DOORS (TYP)
& GENERATOR ENCLOSURE (9 REQ'D)

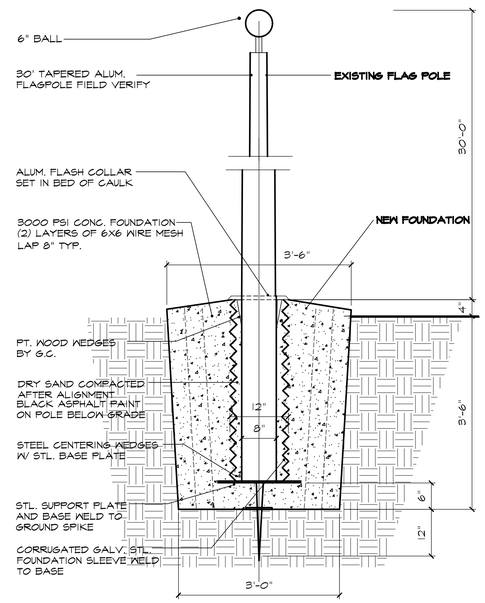

C LS-1 **FLAGPOLE DETAIL** SCALE: 1/2" = 1'-0"
SEE SITE PLAN FOR LOCATION (1 REQ'D)

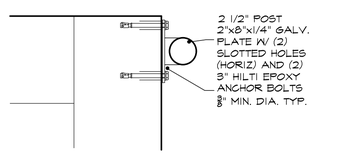

G LS-1 **POST • WALL DETAIL**
CORNER CONDITION SCALE: 1/2" = 1'-0"

HALL & OGLE ARCHITECTS, INC.
208 MAGNOLIA AVENUE
DAYTONA BEACH, FLORIDA 32114
www.hoarchitects.com
PH.(386) 255-6163
FAX.(386)257-5650
AA-C000925

SEAL

REVISIONS

NO.	DATE	DESCRIPTION

DOCUMENT HISTORY

Replacement Fire Station # 96
City of Holly Hill, Fl.
1020 Daytona Avenue
Holly Hill , Florida

ARCHITENGR OF RECORD
JOHN E. HALL AR0010727
DAVID D. OGLE AR93986

DESIGNED BY	DRAWN BY
JEH	SC/ JH
ISSUE DATE	AE PROJECT NUMBER
18-MAY-2023	2204

SHEET TITLE
LIFE SAFETY PLAN

DRAWING NO.
LS1.0

Attachment: Exhibit C - Fire Station #96 Bid Set (2023-R-55 : Fire Station Construction)

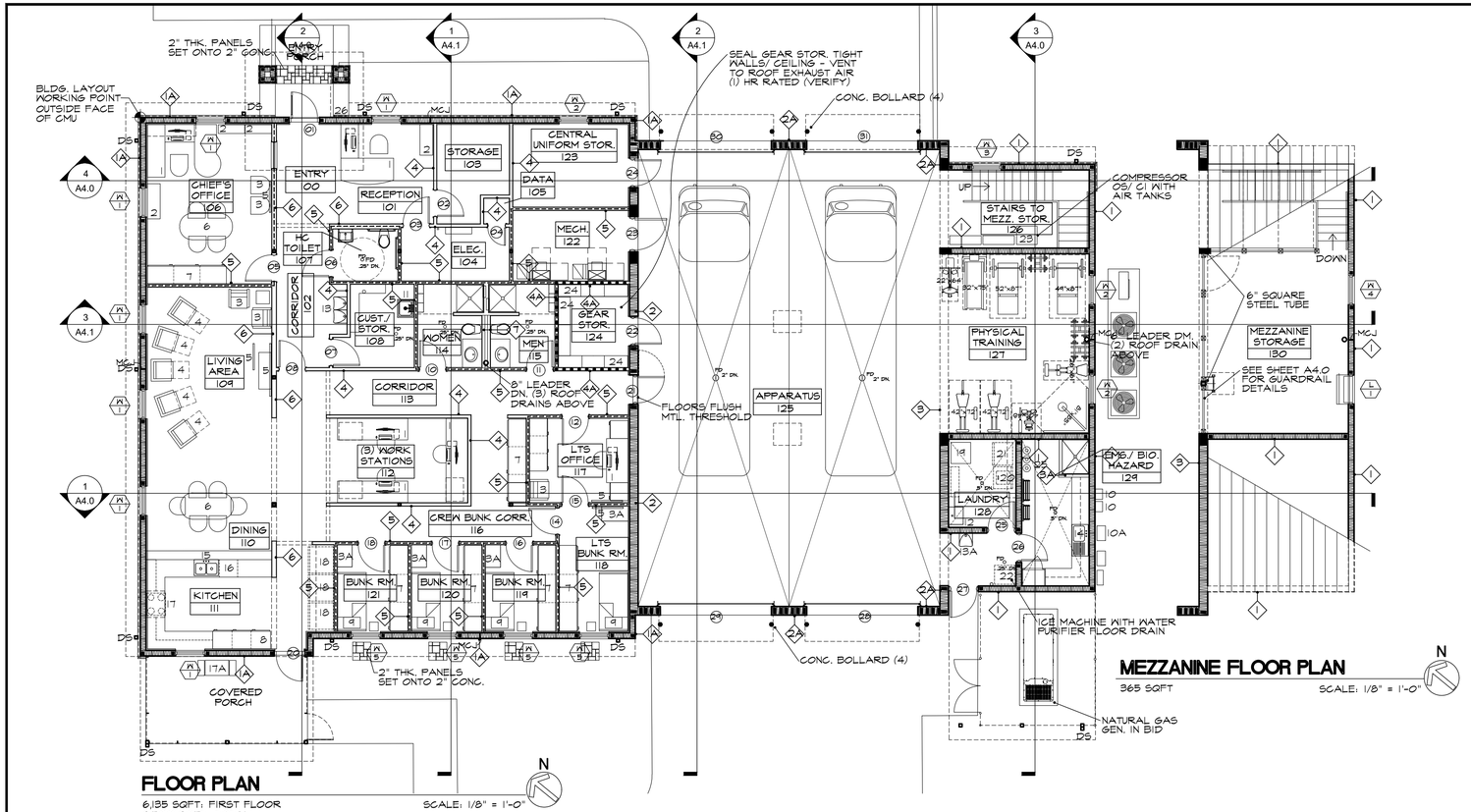

FLOOR PLAN

6,135 SQFT: FIRST FLOOR
6,500 SQFT: TOTAL

SCALE: 1/8" = 1'-0"

MEZZANINE FLOOR PLAN

365 SQFT

SCALE: 1/8" = 1'-0"

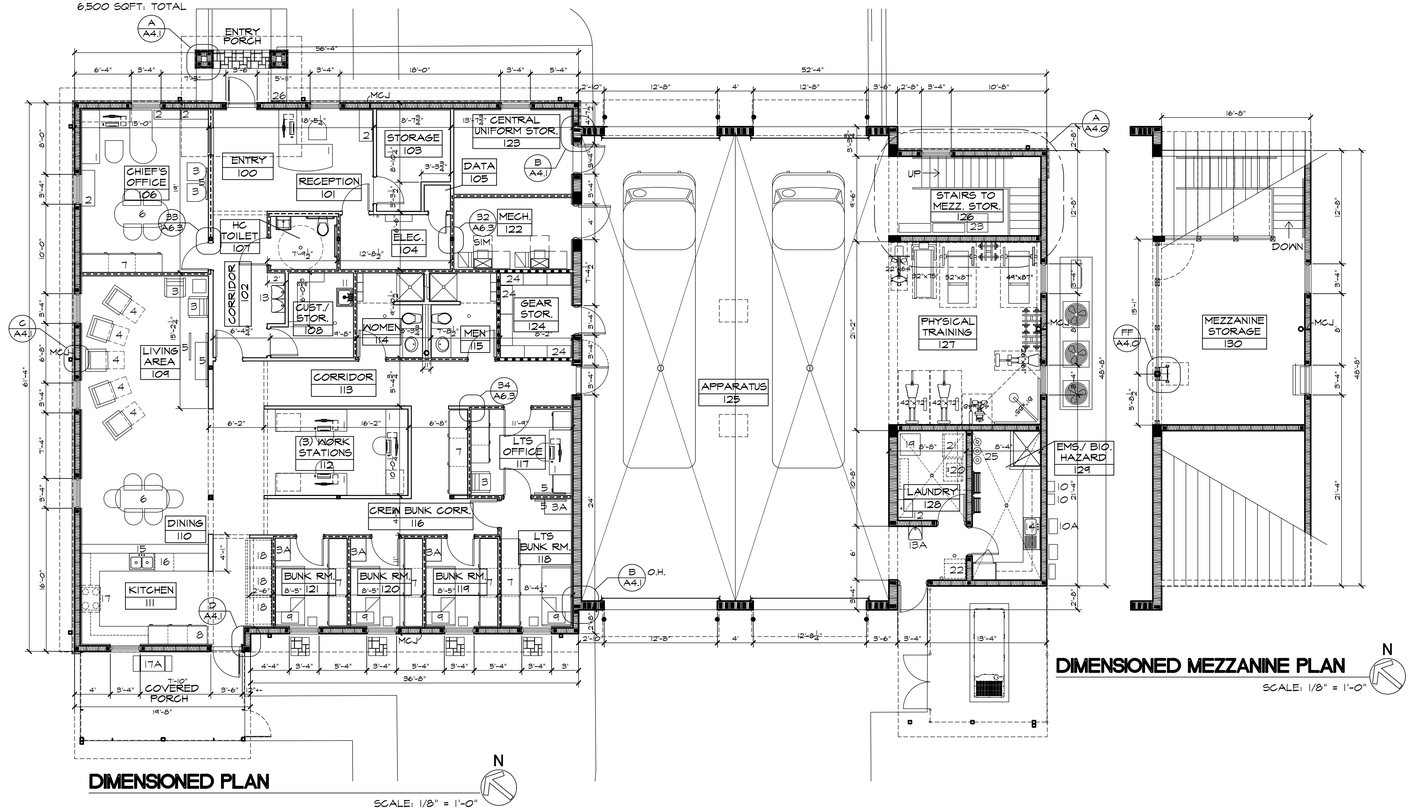

DIMENSIONED PLAN

SCALE: 1/8" = 1'-0"

DIMENSIONED MEZZANINE PLAN

SCALE: 1/8" = 1'-0"

PARTITION TYPES

MASONRY WALLS

1 — 8x8x16 CMU MASONRY W/ SAND FINISH STUCCO OR FACE APPLIED STONE VENEER SOME AREAS (SEE ELEVATIONS FOR LOCATIONS) AND PAINTED BLOCK ON INTERIOR

1A — 8x8x16 CMU MASONRY W/ SAND FINISH STUCCO OR FACE APPLIED STONE VENEER (EXTERIOR) AND (INTERIOR) 1 1/2" RIGID INSULATION, 1 1/2" METAL 'Z' FURRING, 5/8" GWB W/ PLASTER FINISH.

2 — 12x8x16 CMU PARTITION, 1 HR. RATING OF CMU PER UL #U906, OR HAVE A CALCULATED FIRE RESISTANCE IN COMPLIANCE WITH FBC 709, TABLE 709.3.1. SUPPORT AREA SIDE TO HAVE 1 1/2" RIGID INSULATION, 1 1/2" METAL 'Z' FURRING, 5/8" GWB W/ PLASTER FINISH AND PAINTED CMU AT EXPOSED LOCATIONS.

2A — 12x8x16 CMU MASONRY W/ SAND FINISH STUCCO OR FACE APPLIED STONE VENEER (EXTERIOR) AND PAINTED CMU AT EXPOSED LOCATIONS (INTERIOR).

3 — 12x8x16 CMU TO ROOF DECK PAINTED CMU AT EXPOSED LOCATIONS.

3A — 4" CMU PARTITION TO 10'-0" A.F.F.

--------- INDICATES SOUND INSULATION AT STUD WALLS.

METAL STUD WALLS

4 — 4" 20 GA. MTL. STUDS @ 16" O.C. TO LT. GA. TO STRUCTURE ABOVE W/ 5/8" GYP. BD. EACH SIDE TO 12" ABOVE CEILING

4A — 4" 20 GA. MTL. STUDS @ 16" O.C. TO LT. GA. TO STRUCTURE ABOVE W/ 5/8" 1 HR RATED GWB, SEAL TIGHT UL 419 (SEE SHEET A4.2) GWB TO RATED CEILING OR STRUCTURE ABOVE.

5 — 4" 20 GA. MTL. STUDS @ 16" O.C. TO 12' AFF OR STRUCTURE ABOVE W/ 5/8" GYP. BD. EACH SIDE. PROVIDE 3 1/2" SOUND BATT INSULATION TO CEILING/ ROOF.

6 — 6" MTL. STUDS @ 16" O.C. TO 12' AFF OR STRUCTURE ABOVE W/ 5/8" GYP. BD. EA. SIDE.

7 — (2) 4" 20 GA. MTL. STUDS @ 16" O.C. TO 12' AFF OR STRUCTURE ABOVE W/ MOIST. RESIST. GWB. ON (1) SIDE OF STUD- CHASE WALL SYSTEM. CERAMIC TILE FINISH AT WET WALL TYP. SEE TOILET PLANS. SEAL ALL PENETRATIONS AND JOINTS FROM TOP OF C.M.U. TO U/S ROOF DECK.

NOTES:
- PROVIDE MOISTURE RESISTANT GYP. BD. AT TOILET ROOMS AND DUROROCK AT SHOWERS AS INDICATED IN DETAILS
- ALL INTERIOR STUD WALLS TO BE BRACED TO STRUCTURE AT 4' O.C. TYP.

FLOOR PLAN FURNITURE AND EQUIPMENT SCHEDULE

MARK	DESCRIPTION	DIMENSIONS W	D	H	MANUF.	MODEL NO.	NOTES
1	OFFICE FURNITURE W/ COMP. STATION						NIC
2	FILE CABINET/ STORAGE CABINET						NIC
3	OFFICE/ BUNK CHAIR						NIC
3A	BUNK ROOM DESK						NIC
4	LOUNGE CHAIR						NIC
5	FLAT SCREEN TV MONITOR MOUNT TO WALL BRACKET 40" AFF						IC
6	WORK/ DINING TABLE						NIC
7	(3) LARGE LOCKABLE UNITS						IC
8	(3) LARGE LOCKABLE UNITS						IC
9	BED						NIC
10	GAS FIRED INSTA HOT				SEE PLUMBING DRAWINGS & SPECS		
10A	GAS METER				SEE CIVIL DRAWINGS & SPECS		
11	UTILITY SINK / MOP HOLDERS SEE ELEV.				SEE PLUMBING DRAWINGS & SPECS		
12	LAUNDRY TUB				SEE PLUMBING DRAWINGS & SPECS		
13	ELECTRIC WATER COOLER				SEE PLUMBING DRAWINGS & SPECS		
13A	ELECTRIC WATER COOLER (WATER BTL. FILLER)				SEE PLUMBING DRAWINGS & SPECS		
14	SINGLE COMPARTMENT SINK				SEE PLUMBING DRAWINGS & SPECS		
15	DOUBLE COMPARTMENT SINK				SEE PLUMBING DRAWINGS & SPECS		
16	DISHWASHER				SEE PLUMBING DRAWINGS & SPECS		
17	NAT. GAS RANGE 5 BURNER/ OVEN COOK TOP						OS/CI
17A	NAT. GAS GRILL 6 BURNER						OS/CI
18	REFRIGERATOR						OS/CI
19	GEAR WASHING MACHINE						OS/CI
20	WASHING MACHINE						OS/CI
21	DRYER						OS/CI
22	ICE MACHINE AND WATER FILTER						OS/CI
23	AIR COMPRESSOR AND AIR TANKS						OS/CI
24	GEAR STORAGE UNITS						IC
25	MEDICAL AIR TANKS						OS/CI
26	BRONZE DEDICATION PLAQUE						IC

HALL & OGLE ARCHITECTS, INC.
208 MAGNOLIA AVENUE
DAYTONA BEACH, FLORIDA 32114
www.hoarchitects.com
PH:(386) 255-6163
FAX:(386)257-5650
AA-C000925

SEAL

REVISIONS

NO.	DATE	DESCRIPTION

DOCUMENT HISTORY

Replacement Fire Station # 96
City of Holly Hill, Fl.
1020 Daytona Avenue
Holly Hill , Florida

ARCHITECT OF RECORD
JOHN E. HALL AR0010727
DAVID D. OGLE AR93986

DESIGNED BY	DRAWN BY
JEH	SC/ JH
ISSUE DATE	AE PROJECT NUMBER
18-MAY-2023	2204

SHEET TITLE
FLOOR PLANS
DIMENSIONED PLANS

DRAWING NO.
A2.0

Attachment: Exhibit C - Fire Station #96 Bid Set (2023-R-55 : Fire Station Construction)

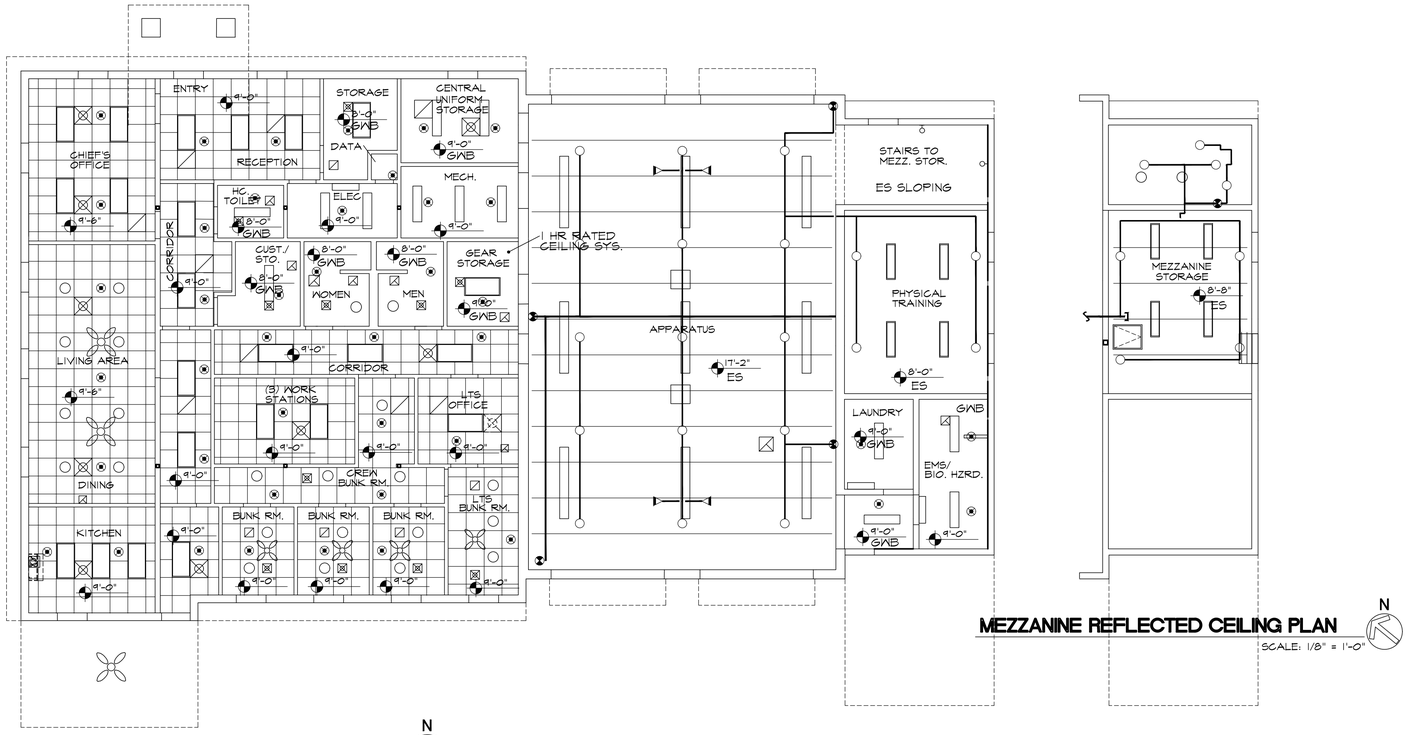

REFLECTED CEILING PLAN

SCALE: 1/8" = 1'-0"

MEZZANINE REFLECTED CEILING PLAN

SCALE: 1/8" = 1'-0"

CEILING LEGEND

- 2'x2' LAY IN ACOUSTICAL PANELS (SEE FINISH SCHEDULES FOR TYPES)
  *USE OVERSIZE TILE IF REQ'D TO AVOID NARROW STRIP AT EDGE OF ROOM
- GWB — MOISTURE RESISTANT GWB PAINTED
- ES — EXPOSED STRUCTURE PAINTED
- ELECTRICAL FIXTURES (SEE ELECTRICAL PLANS)
- MECHANICAL FIXTURES (SEE MECHANICAL PLANS)

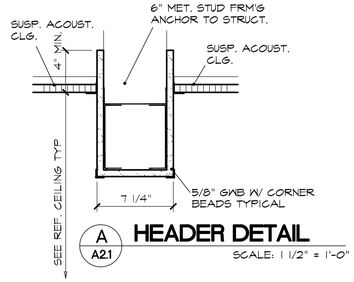

A2.1 **HEADER DETAIL**

SCALE: 1 1/2" = 1'-0"

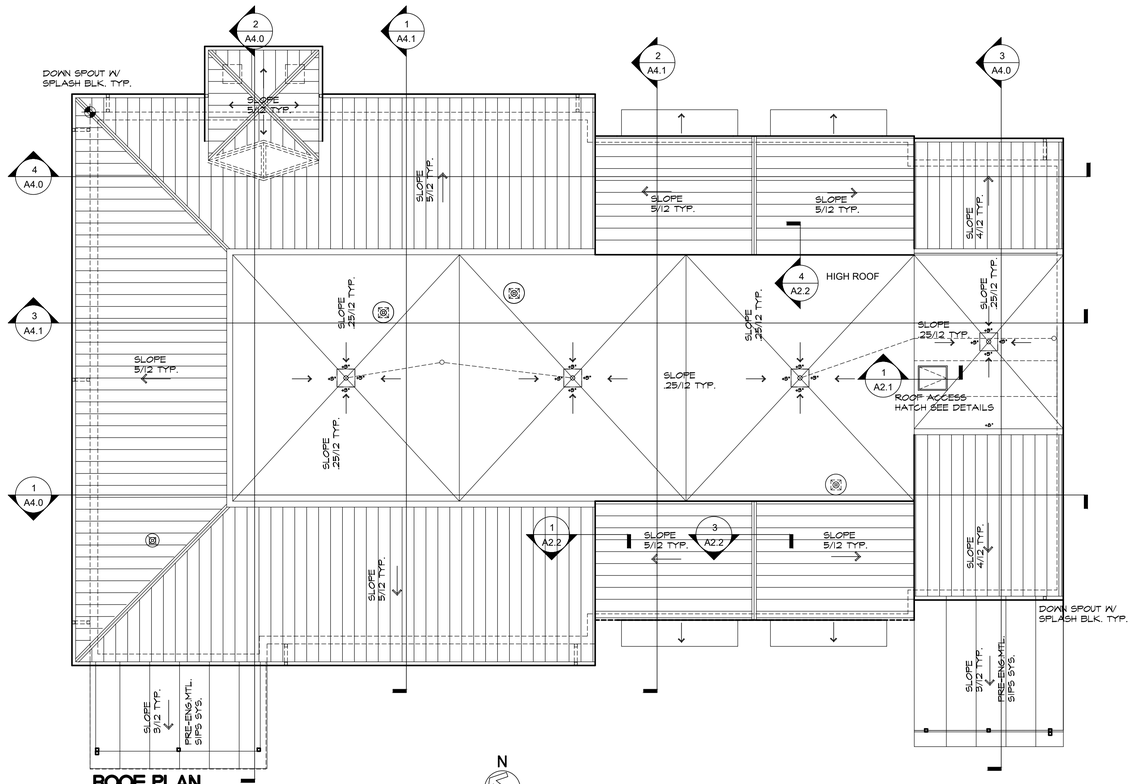

ROOF PLAN

SCALE: 1/8" = 1'-0"

NOTE:
- SEE SHEETS A2.2 AND A2.3 FOR METAL ROOF DETAILS.
- SEE SHEET A2.4 FOR LIGHTNING PROTECTION PLAN AND DETAILS.

ROOF ACCESS HATCH

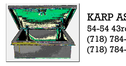

KARP ASSOCIATES, INC.
54-54 43rd Street, Maspeth, NY 11378
(718) 784-2105 - Phone
(718) 784-9169 - Fax

SPECIFICATIONS

GENERAL SCOPE:
Access doors shall be Karp Roof Hatches as manufactured by Karp Associates, Inc., Maspeth, N.Y.
Sizes shall be as indicated on the drawings.

CONSTRUCTION:
1. Curb: 14 gage galvanized steel or .125 aluminum, 12" high, integral counterflashing, 4" wide mounting flanges with pre-drilled holes, and 1" fiberboard insulation on the exterior with metal corner guards.
2. Cover: 14 gage galvanized steel or .125 aluminum with 22 gage galvanized liner. Cover open with push button lock release.
3. Cover operation shall be assisted by fully enclosed compression spring operators.
4. Cover shall be mounted on steel butt hinges with brass pin and be complete with closed cell foam rubber weather seal, automatic hold open arm with red vinyl grip, and latching devices having inside and outside padlock hasp.
5. All hardware shall be zinc or cadmium plated.
6. Finish shall be prime coat of rust inhibitive baked grey enamel.

STANDARD SIZES

DOOR SIZE L X W (IN.)	SHIPPING WT. (LBS.) KRHG	KRHA
2' x 3'	135.0	70.0
2'6 x 3'	155.0	85.0
2'6 x 4'6	225.0	135.0
2'6 x 8'	335.0	245.0

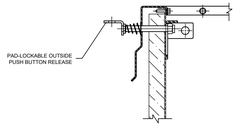

VIEW "A"

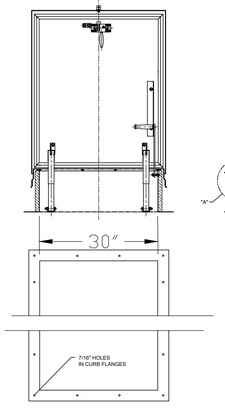

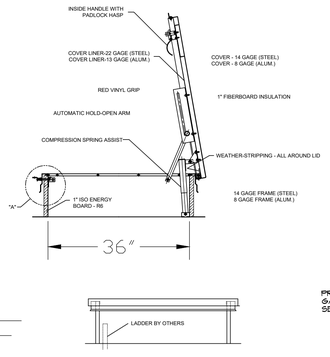

1 A2.1 **ROOF HATCH DETAILS**

NOT TO SCALE

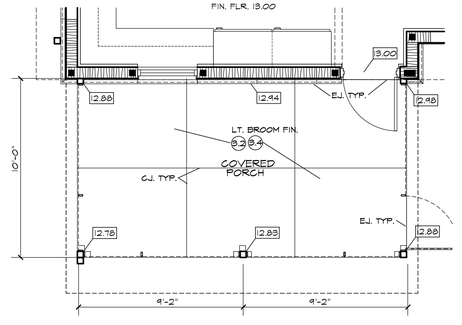

PORCH SLAB PLAN

SCALE: 1/4" = 1'-0"

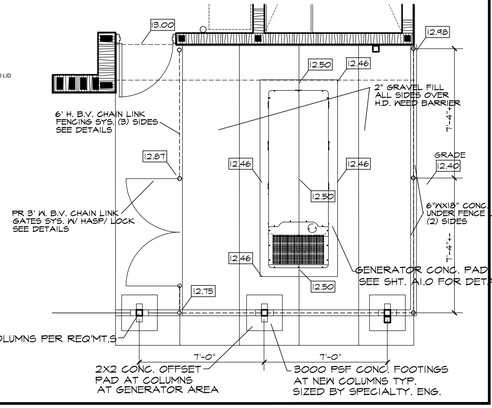

HALL & OGLE ARCHITECTS, INC.
208 MAGNOLIA AVENUE
DAYTONA BEACH, FLORIDA 32114
www.hoarchitects.com
PH.(386) 255-6163
FAX.(386)257-5650
AA-C000925

SEAL

REVISIONS

NO.	DATE	DESCRIPTION

DOCUMENT HISTORY

Replacement Fire Station # 96
City of Holly Hill, Fl.
1020 Daytona Avenue
Holly Hill , Florida

ARCH/ENGR OF RECORD
JOHN E. HALL AR0010727
DAVID D. OGLE AR93986

DESIGNED BY	DRAWN BY
JEH	SC/ JH
ISSUE DATE	AE PROJECT NUMBER
18-MAY-2023	2204

SHEET TITLE
REFLECTED CEILING PLAN
ROOF PLAN

DRAWING NO.
A2.1

Attachment: Exhibit C - Fire Station #96 Bid Set (2023-R-55 : Fire Station Construction)

METAL ROOFING DETAILS

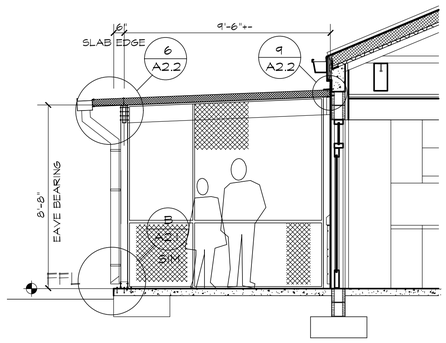

PORCH NOTE:
4" THK. ALUM. SIPS ROOF PANELS WITH 4"X4" ALUM. COLUMNS AND 2"X10" ALUM. PERIMETER BEAM SYS. NEW CONC. FOUNDATIONS AT COLUMNS

A A2.2 PARTIAL SECTION
SCREEN PORCH — SCALE: 1/4" = 1'-0"

B A2.2 FLASHING DETAIL
HIP/ RIDGE CLOSURE/ PARTS — SCALE: 3" = 1'-0"

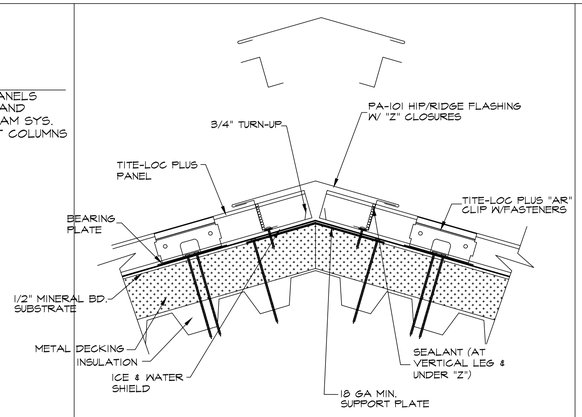

3 A2.2 PEAK-RIDGE DETAIL
CAP FLASHING — SCALE: 3" = 1'-0"

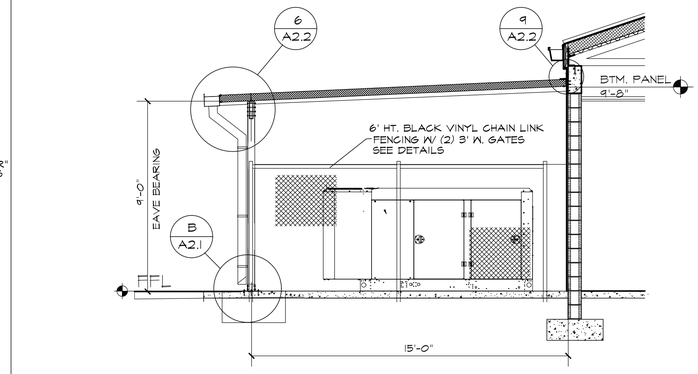

C A2.2 PARTIAL SECTION
GENERATOR COVER — SCALE: 1/4" = 1'-0"

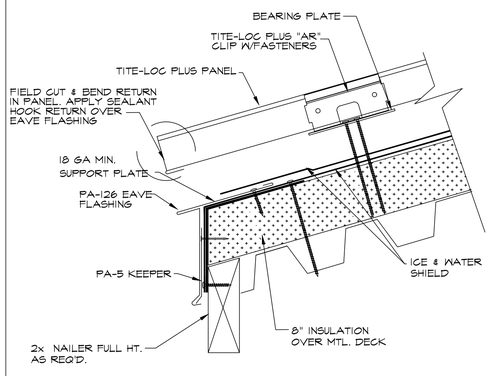

1 A2.2 EAVE DETAIL
NO GUTTER — SCALE: 3" = 1'-0"

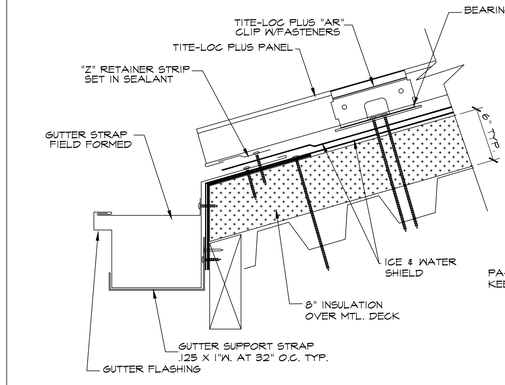

2 A2.2 EAVE DETAIL
GUTTER — .040 ALUM. GUTTER SYS. — SCALE: 3" = 1'-0"

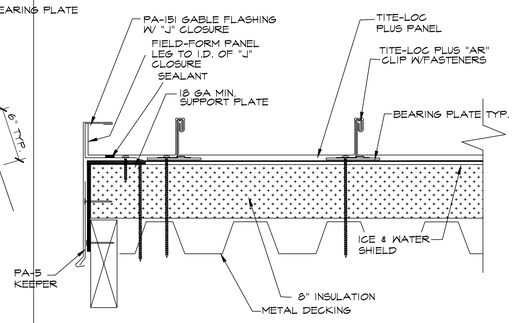

4 A2.2 RAKE DETAIL
END FLASHING — SCALE: 3" = 1'-0"

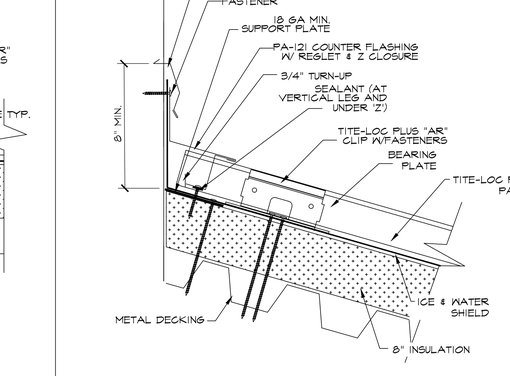

5 A2.2 ROOF TO WALL DETAIL
OFFSET ROOF — SCALE: 3" = 1'-0"

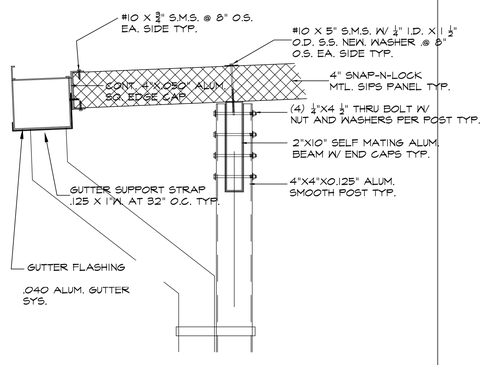

6 A2.2 EAVE DETAIL
INSULATED PANELS W/ GUTTER — SCALE: 1 1/2" = 1'-0"

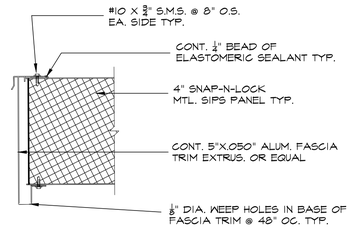

7 A2.2 EAVE DETAIL
RAKE EAVE — SCALE: 3" = 1'-0"

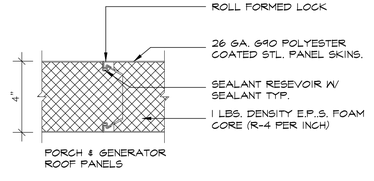

GENERAL NOTE:
INSTALL ALL FLASHING PLIES AND TERMINATIONS PER MANUF. ROOF SYSTEM REQUIREMENTS TYP.

ALUM. FLASHING/ SHT. MTL. COLORS TO BE STAND. COLORS
METAL ROOFING TO BE TITE-LOC PLUS SYS. MANUF. PETERSEN OR EQUAL COLORS TO BE STAND. COLORS

8 A2.2 PANEL CONNECTION DETAIL
PORCH/ GEN. ROOF — SCALE: 3" = 1'-0"

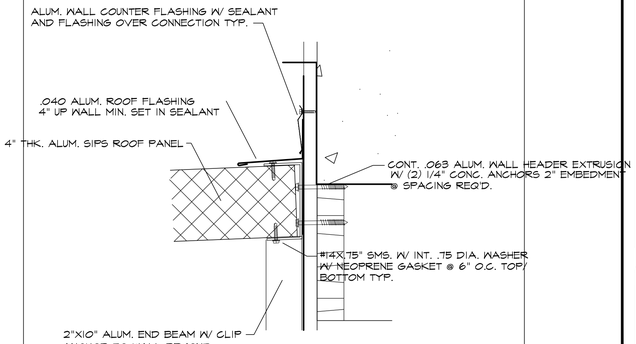

9 A2.2 ROOF TO WALL DETAIL
PORCH ROOF — SCALE: 3" = 1'-0"

HALL & OGLE ARCHITECTS, INC.
208 MAGNOLIA AVENUE
DAYTONA BEACH, FLORIDA 32114
www.hoarchitects.com
PH.(386) 255-6163
FAX.(386)257-5650
AA-C000925

SEAL

REVISIONS

NO.	DATE	DESCRIPTION

Replacement Fire Station # 96
City of Holly Hill, Fl.
1020 Daytona Avenue
Holly Hill , Florida

ARCH/ENGR OF RECORD
JOHN E. HALL AR0010727
DAVID D. OGLE AR93986

DESIGNED BY	DRAWN BY
JEH	SC/ JH
ISSUE DATE	AE PROJECT NUMBER
18-MAY-2023	2204

SHEET TITLE
METAL ROOFING DETAILS

DRAWING NO.
A2.2

Attachment: Exhibit C - Fire Station #96 Bid Set (2023-R-55 : Fire Station Construction)

SINGLE PLY ROOFING DETAILS

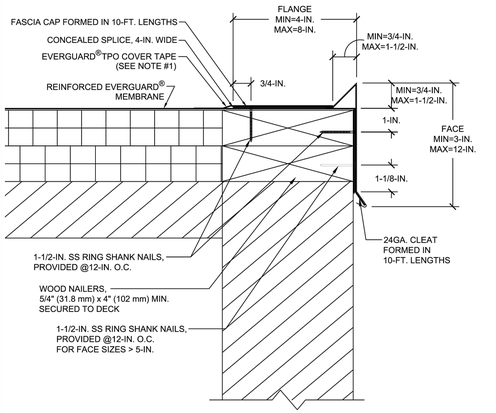

NOTE:

1. PRODUCT TO BE INSTALLED IN STRICT ACCORDANCE WITH GAF PRINTED INSTRUCTIONS.
2. PRE-DRILL WITH 3/16-IN. DRILL BIT FOR MASONRY CONDITIONS.
3. CONTACT GAF FOR APPROPRIATE RECOMMENDATIONS NEEDED TO MEET/EXCEED ANSI/SPRI/FM4435/ES-1 DESIGN CRITERIA.

1 A2.3 DETAIL HIGH ROOF EAVE SCALE: 3" = 1'-0"

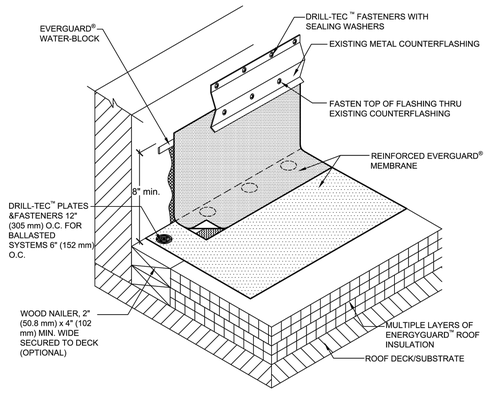

NOTE:

1. ADD BALLAST PER SPEC FOR BALLASTED SYSTEMS.
2. EXPOSED WALLS/CURBS MUST BE WATERPROOFED AND MAINTAINED ABOVE THE BASE FLASHING IN ORDER FOR ANY SURFACE-MOUNTED TERMINATION TO BE EFFECTIVE.

2 A2.3 DETAIL OFFSET ROOF SCALE: 3" = 1'-0"

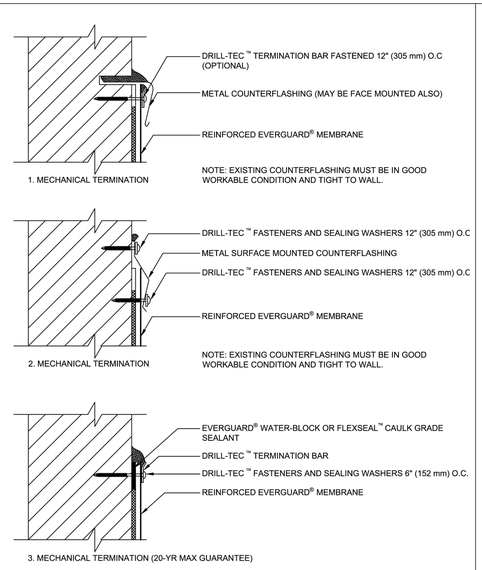

3 A2.3 DETAIL TERMINATIONS OPTIONS SCALE: 3" = 1'-0"

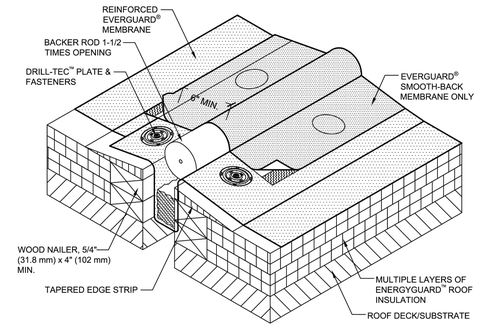

NOTE:

1. FOR INSULATION THICKNESS GREATER THAN 8" (203 mm), A COVER BOARD IS REQUIRED ON MECHANICALLY ATTACHED SYSTEMS ONLY.
2. FIELD-FABRICATED EXPANSION JOINT SHOULD NOT BE FLEECE-BACK OR SELF-ADHERING MEMBRANE. USE STANDARD EVERGUARD® MEMBRANE.

4 A2.3 DETAIL ROOF EXPANSION SCALE: 3" = 1'-0"

GENERAL NOTE:
INSTALL ALL FLASHING PLIES AND TERMINATIONS PER MANUF. ROOF SYSTEM REQUIREMENTS TYP.

ALUM. FLASHING/ SHT. MTL. COLORS TO BE STAND. COLORS METAL ROOFING TO BE TITE-LOC PLUS SYS. MANUF. PETERSEN OR EQUAL COLORS TO BE STAND. COLORS

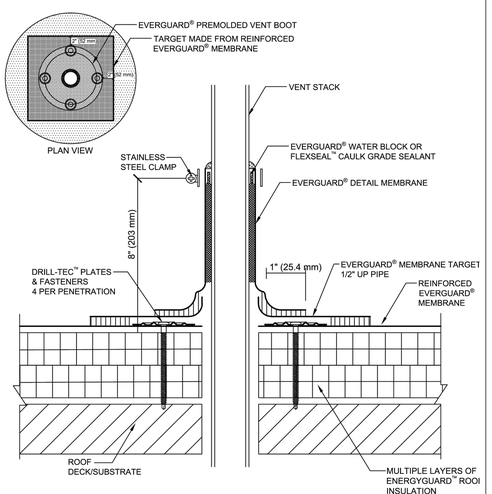

NOTE:

1. FOR INSULATION THICKNESS GREATER THAN 8" (203 mm), A COVER BOARD IS REQUIRED ON MECHANICALLY ATTACHED SYSTEMS ONLY.
2. APPLY HEAT TO UNREINFORCED DETAIL MEMBRANE AND FORM BY HAND PRIOR TO HOT AIR WELDING.

5 A2.3 DETAIL PIPE PENETARATION SCALE: 3" = 1'-0"

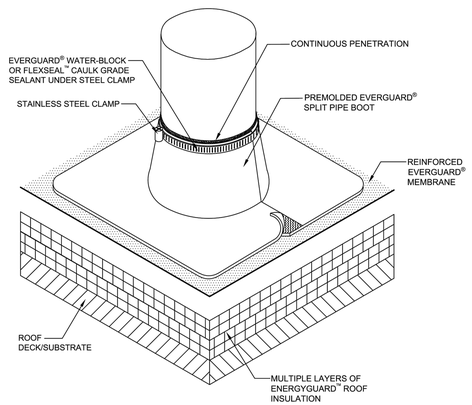

NOTE:

1. FOUR DRILL-TEC™ PLATES & SCREWS AROUND PENETRATION.
2. IF PLATES AND FASTENERS ENCROACH INTO THE SEAM AREA OF THE POCKET, THEN A TARGET MUST BE ADDED FIRST TO COVER FASTENERS.
3. 25 YEAR GUARANTEES AND ABOVE MUST USE EXTREME ACCESSORIES.

6 A2.3 DETAIL SPLIT PIPE BOOT SCALE: 3" = 1'-0"

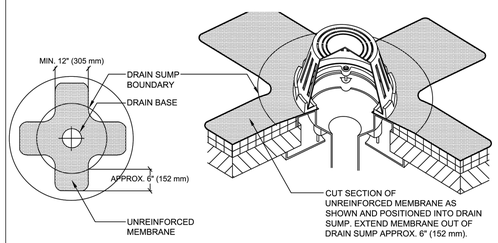

7 A2.3 DETAIL ROOF DRAIN NOT TO SCALE

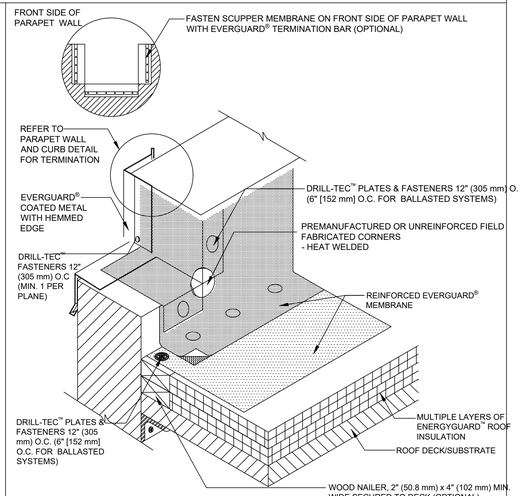

NOTE:

1. DETAIL TO BE USED IN CONJUNCTION WITH STANDARD GUIDE SPECIFICATION CONTAINING REQUIREMENTS FOR NAILERS, INSULATION ETC.

8 A2.3 OVERFLOW ROOF SCUPPER LOW SLOPE ROOF NOT TO SCALE

HALL & OGLE ARCHITECTS, INC.
208 MAGNOLIA AVENUE
DAYTONA BEACH, FLORIDA 32114
PH (386) 255-6163
FAX (386)257-5650
AA-C000925
www.hoarchitects.com

SEAL

REVISIONS

NO.	DATE	DESCRIPTION

DOCUMENT HISTORY

Replacement Fire Station # 96
City of Holly Hill, Fl.
1020 Daytona Avenue
Holly Hill , Florida

ARCHITECT OF RECORD
JOHN E. HALL AR0010727
DAVID D. OGLE AR93986

DESIGNED BY	DRAWN BY
JEH	SC/ JH
ISSUE DATE	AE PROJECT NUMBER
18-MAY-2023	2204

SHEET TITLE
METAL ROOFING DETAILS

DRAWING NO.
A2.3

Attachment: Exhibit C - Fire Station #96 Bid Set (2023-R-55 : Fire Station Construction)

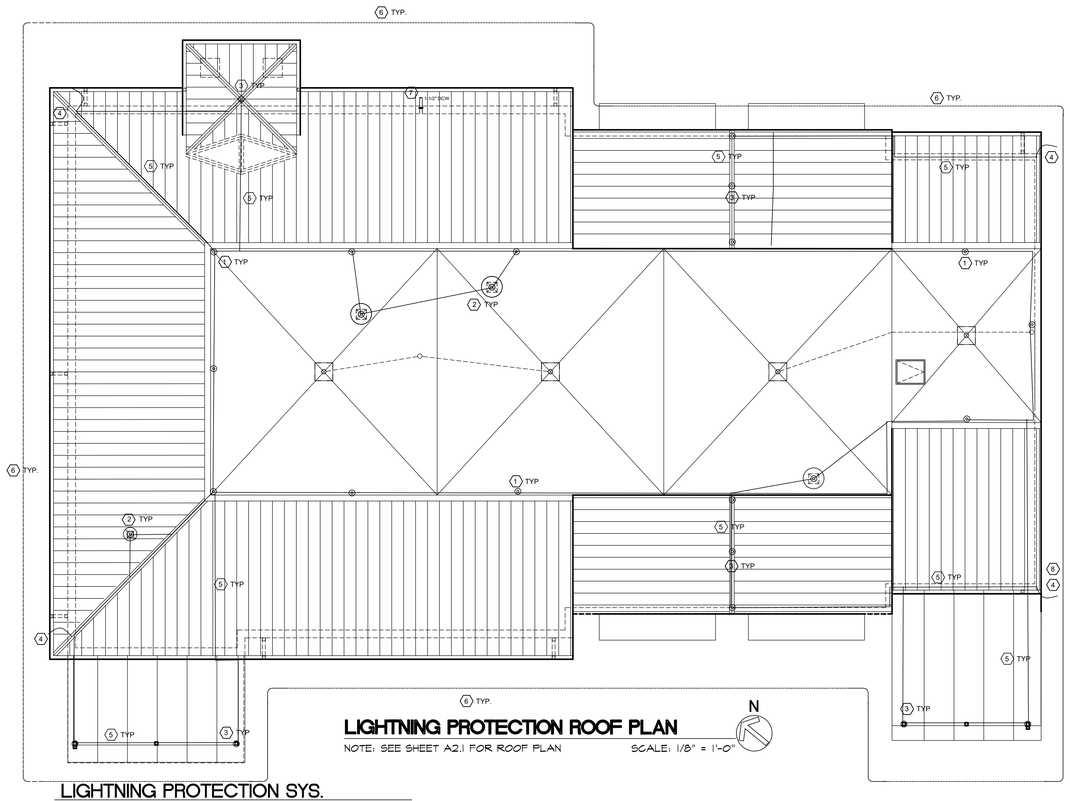

LIGHTNING PROTECTION ROOF PLAN

NOTE: SEE SHEET A2.1 FOR ROOF PLAN

SCALE: 1/8" = 1'-0"

NOTE: DETAILS NOT TO SCALE TYPICAL

KEYED NOTES:

1. NO. A24, CLASS I ALUMINUM LIGHTNING CONDUCTOR SECURED TO PARAPET WALL WITH NO. A262, HOLDER AND NO. M1, ADHESIVE EVERY 3 FEET MAXIMUM SPACING.
2. NO. A24, CLASS I ALUMINUM LIGHTNING CONDUCTOR SECURED TO UNIT WITH NO. A262, HOLDER AND NO. M1, ADHESIVE EVERY 3 FEET MAXIMUM SPACING.
3. NO. A24, CLASS I ALUMINUM LIGHTNING CONDUCTOR SECURED TO ROOF WITH NO. A262, HOLDER AND NO. M1, ADHESIVE EVERY 3 FEET MAXIMUM SPACING.
4. NO. 29, CLASS I COPPER DOWN CONDUCTOR RUN CONCEALED IN EXTERIOR WALL IN PVC CONDUIT FURNISHED AND INSTALLED BY OTHERS.
5. NO. A24, CLASS I ALUMINUM LIGHTNING EXPOSED CONDUCTOR SECURED TO ROOF MATERIAL WITH NO. A262, HOLDER AND NO. M1, ADHESIVE EVERY 3 FEET MAXIMUM SPACING.
6. NO. 29, BARE COPPER GROUND LOOP CONDUCTOR INTERCONNECTING GROUND ELECTRODES BELOW GRADE.
7. LOCATE AND BOND TO METALLIC PIPING.
8. BOND TO ELECTRIC SERVICE GROUND. SEE DETAIL

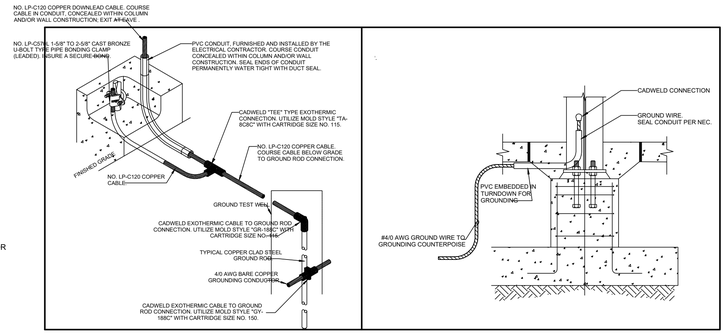

A A2.4 **FOUNDATION DETAIL** — CONCEALED DOWN LEAD TO GROUND

B A2.4 **FOUNDATION DETAIL** — STRUCT. STL. GROUNDING

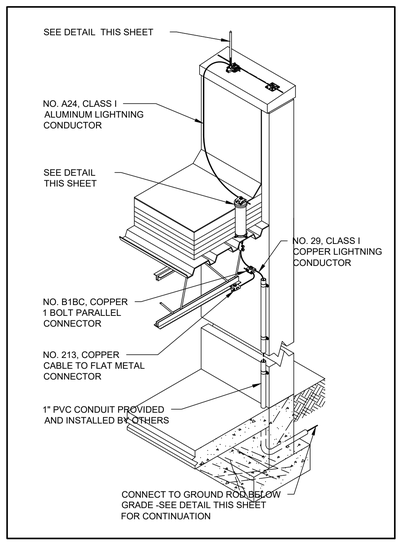

C A2.4 **DETAIL** — CONCEALED DOWN EXTERIOR WALL

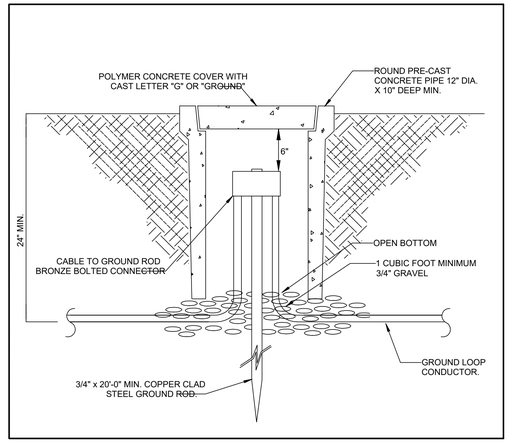

D A2.4 **DETAIL** — GROUND TEST WELL

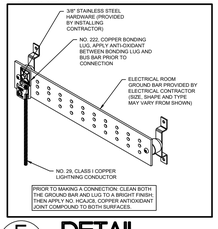

E A2.4 **DETAIL** — ELECTRICAL SERVICE BONDING

NOTE: PROVIDE THE OWNER PRICING FOR A UL CLASS 1 MASTER LABEL LIGHTING PROTECTION SYS., INCLUDING ALL AIR TERMINALS AND CROSS CONDUCTORS, DOWN LEADS, GROUNDING ELECTRODES, ETC. REQUIRED FOR A COMPLETE SYSTEM. ALSO PROVIDE CONNECTION INCLUDING CONTINUOUS LOOP OF ROOF CROSS CONDUCTORS TO ALL ROOFTOP EQUIPMENT. ALSO PROVIDE REFER TO ALL ENGINEERING PLANS FOR MORE DETAILS. ALL DOWNLEADS TO BE INDEPENDENT CONDUCTORS RUN IN 1.25" PVC SCHEDULE 40 RACEWAY.

LIGHTNING PROTECTION SYS.

NEW FIRE STATION #96

1. THE COMPLETED INSTALLATION SHALL MEET THE REQUIREMENTS OF THE "INSTALLATION REQUIREMENTS FOR LIGHTNING PROTECTION SYSTEMS, UL 96A" OF UNDERWRITERS LABORATORIES INC.
2. THE COMPLETED INSTALLATION SHALL BE CERTIFIED BY UNDERWRITERS LABORATORIES (UL) WITH A "MASTER LABEL CERTIFICATE" COMPLIANT WITH UL 96A (13TH EDITION).
3. ALL METALLIC PIPING (WATER, FIRE, SANITARY, STORM, ETC) AND CONDUCTIVE SERVICES (COAX, ANTENNA, ETC) WHICH ENTERS THE PROTECTED BUILDING SHALL BE BONDED TO THE LIGHTNING PROTECTION SYSTEM WITHIN 12 FT (3.6M) OF GRADE.
4. THE LIGHTNING PROTECTION SYSTEM REQUIRES A SURGE PROTECTION DEVICE TO BE INSTALLED ON EACH ELECTRIC SERVICE ENTRANCE. THESE SURGE PROTECTION DEVICES MUST BE A TYPE 1 OR TYPE 2 SURGE PROTECTION DEVICE THAT IS LISTED TO COMPLY WITH UL 1449, 4TH EDITION AND HAVE A NOMINAL DISCHARGE CURRENT (IN) OF 20KA PER PHASE.
5. THE LIGHTNING PROTECTION SYSTEM REQUIRES A SURGE PROTECTION DEVICE TO BE INSTALLED ON EACH CONDUCTIVE SIGNAL, DATA AND COMMUNICATION LINE. THESE SURGE PROTECTION DEVICES SHALL BE LISTED TO COMPLY WITH UL-452 "THE STANDARD FOR ANTENNA-DISCHARGE UNITS", UL-497 "THE STANDARD FOR PROTECTORS FOR PAIRED-CONDUCTOR COMMUNICATIONS CIRCUITS" OR UL-497C "THE STANDARD FOR PROTECTORS FOR COAXIAL COMMUNICATIONS CIRCUITS" AND HAVE A 10 KA MAXIMUM DISCHARGE CURRENT (IMAX) WHEN INSTALLED AT THE ENTRANCE.
6. ADHESIVE USED WITH ADHESIVE AIR TERMINAL BASES AND CONDUCTOR FASTENERS SHALL BE 'M1 STRUCTURAL SEALANT' TYPE - VERIFY WITH ROOFING CONTRACTOR.
7. ROOF PADS, PAVERS, FLASHING OR ANY OTHER SPECIAL ROOFING MATERIALS REQUIRED FOR THE INSTALLATION OF THE LIGHTNING PROTECTION SYSTEM SHALL BE FURNISHED AND INSTALLED BY THE ROOFING CONTRACTOR.
8. INDICATED BUILDING HEIGHTS ARE BASED ON FIRST FLOOR BEING 0'-0" AND MAY NOT REPRESENT ACTUAL HEIGHT ABOVE GRADE AT INDICATED POINT.
9. STRIKE TERMINATION DEVICES SHALL BE PLACED ON RIDGES OF PITCHED ROOFS AND AROUND THE PERIMETER OF FLAT OR GENTLY SLOPING ROOFS AT INTERVALS NOT EXCEEDING 20 FT (6 M). STRIKE TERMINATION DEVICES 2 FT (0.6 M) OR MORE ABOVE THE OBJECT OR AREA TO BE PROTECTED SHALL BE PERMITTED TO BE PLACED AT INTERVALS NOT EXCEEDING 25 FT (7.6M).
10. MAIN CONDUCTORS SHALL INTERCONNECT ALL STRIKE TERMINATION DEVICES AND SHALL HAVE A DOWNWARD OR HORIZONTAL PATH TO GROUND. CONDUCTORS ARE ALLOWED TO RISE, PROVIDED A 3:12 (1/4) SLOPE IS MAINTAINED. ALL BENDS IN THE CONDUCTOR SHALL HAVE A MINIMUM RADIUS OF 8" NOR SHALL THE BEND HAVE AN INCLUDED ANGLE OF LESS THAN 90 DEGREES.
11. THE TIP OF A STRIKE TERMINATION DEVICE SHALL NOT BE LESS THAN 10 IN. (254 MM) ABOVE THE OBJECT OR AREA IT IS TO PROTECT.

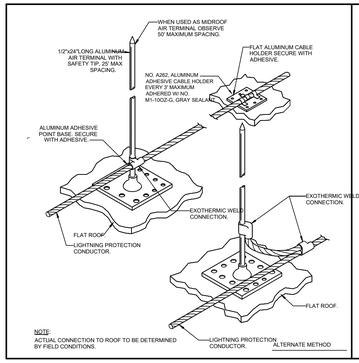

1 A2.4 **LOW SLOPE ROOF** — MOUNTING AIR TERMINAL

NOTE: DETAILS NOT TO SCALE TYPICAL

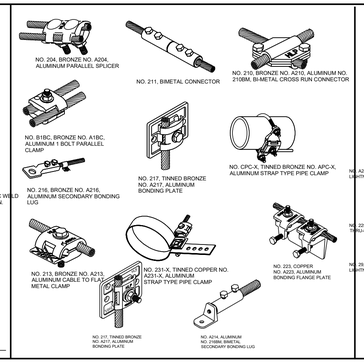

2 A2.4 **DETAILS** — TYP. BONDING/ SPLICING

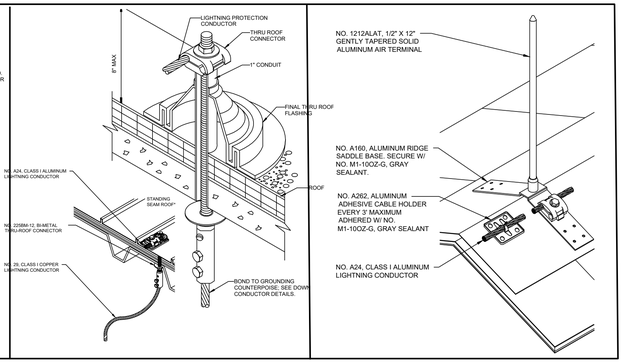

3 A2.4 **DETAIL** — THRU ROOF PENETRATION

4 A2.4 **DETAIL** — METAL ROOF PEAK

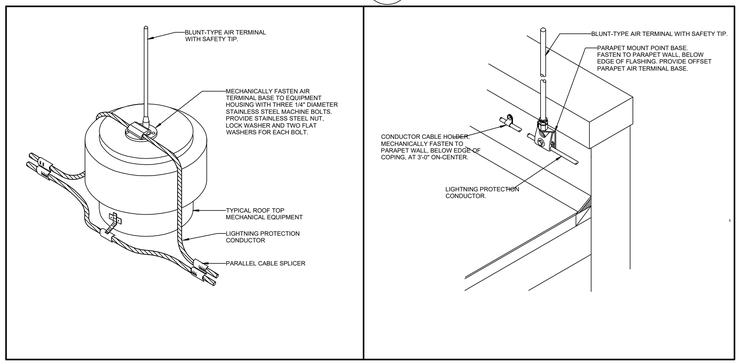

5 A2.4 **DETAIL** — EQUIPMENT MOUNTED AIR TERMINAL

6 A2.4 **DETAIL** — PARAPET AIR TERMINAL

HALL & OGLE ARCHITECTS, INC.
208 MAGNOLIA AVENUE
DAYTONA BEACH, FLORIDA 32114
PH.(386) 255-6163
FAX.(386)257-5650
AA-C000925
www.hoarchitects.com

SEAL

REVISIONS

NO.	DATE	DESCRIPTION

Replacement Fire Station # 96
City of Holly Hill, Fl.
1020 Daytona Avenue
Holly Hill , Florida

ARCHITECT OF RECORD
JOHN E. HALL AR0010727
DAVID D. OGLE AR93986

DESIGNED BY	DRAWN BY
JEH	SC/ JH
ISSUE DATE	AE PROJECT NUMBER
18-MAY-2023	2204

SHEET TITLE
LIGHTNING PROTECTION PLAN
L.P.ROOF PLAN

DRAWING NO.
A2.4

Attachment: Exhibit C - Fire Station #96 Bid Set (2023-R-55 : Fire Station Construction)

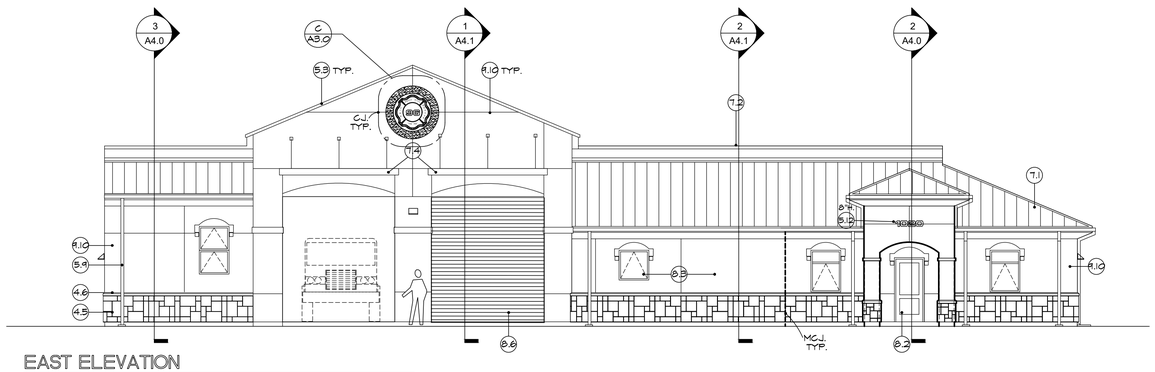

EAST ELEVATION

SCALE: 1/8" = 1'-0"

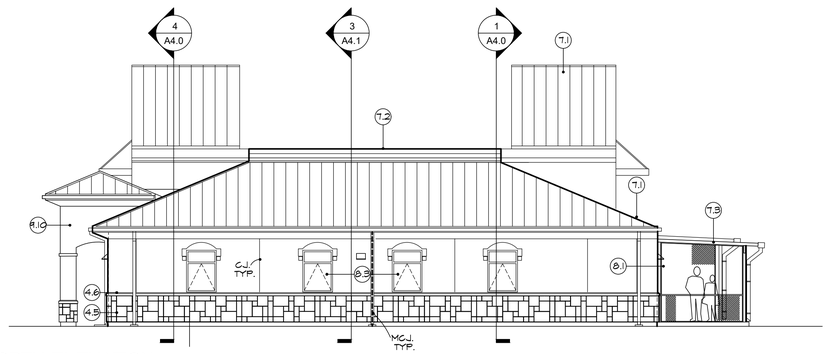

NORTH ELEVATION

SCALE: 1/8" = 1'-0"

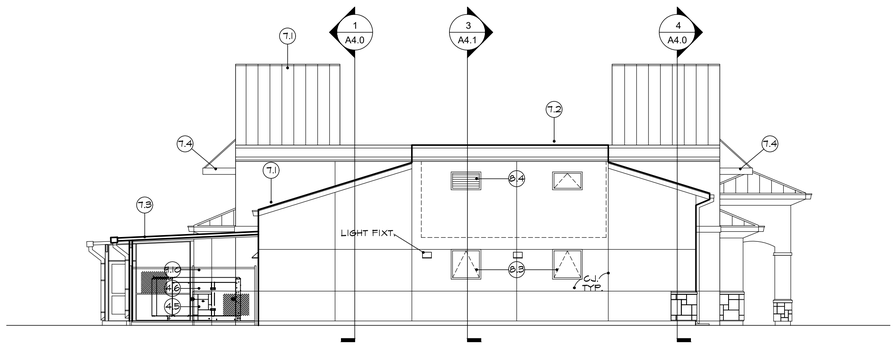

SOUTH ELEVATION

SCALE: 1/8" = 1'-0"

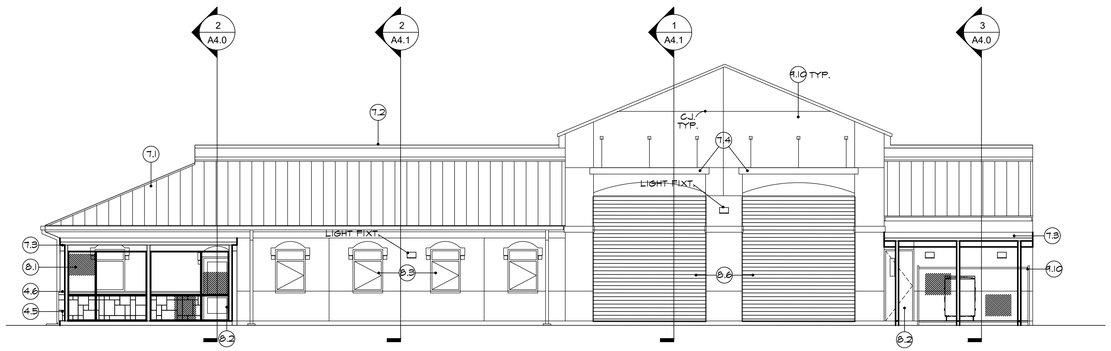

WEST ELEVATION

SCALE: 1/8" = 1'-0"

PANELS AT ENTRY COLUMNS

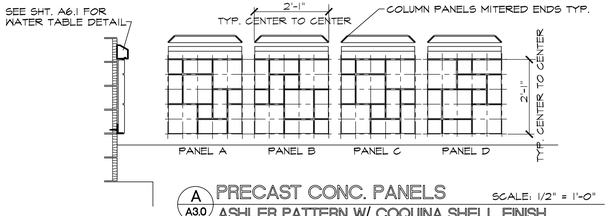

A A3.0 **PRECAST CONC. PANELS** SCALE: 1/2" = 1'-0"
ASHLER PATTERN W/ COQUINA SHELL FINISH
BASE TO FRONT COLUMNS

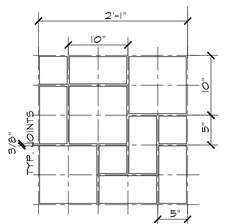

AA A3.0 **MODULAR LAYOUT** SCALE: 1" = 1'-0"
PANEL A NOTE: ROTATE 90 DEG. FOR PANELS B,C,&D

PANELS AT WALLS OF BUILDING

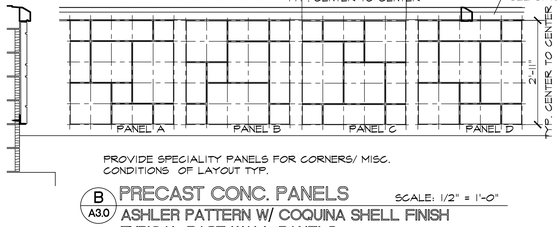

PROVIDE SPECIALITY PANELS FOR CORNERS/ MISC. CONDITIONS OF LAYOUT TYP.

B A3.0 **PRECAST CONC. PANELS** SCALE: 1/2" = 1'-0"
ASHLER PATTERN W/ COQUINA SHELL FINISH
TYPICAL BASE WALL PANELS

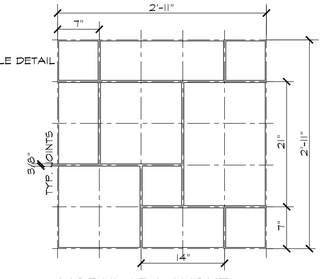

BB A3.0 **MODULAR LAYOUT** SCALE: 1" = 1'-0"
PANEL A NOTE: ROTATE 90 DEG. FOR PANELS B,C,&D

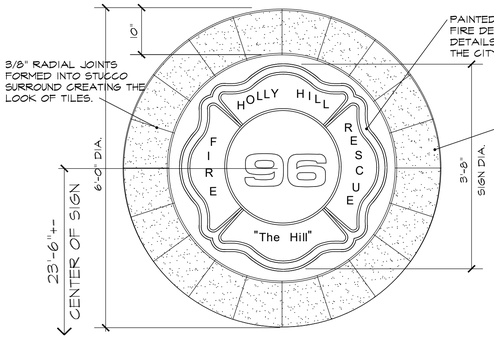

C A3.0 **LOGO DETAIL** SCALE: 1 1/2" = 1'-0"

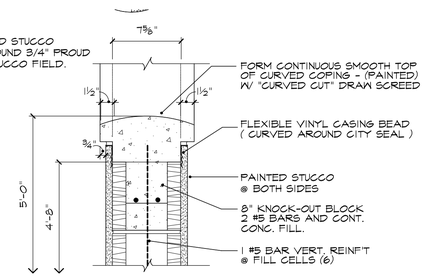

CC A3.0 **WALL COPING DETAIL** SCALE: 1 1/2" = 1'-0"
ALTERNATIVE DETAIL

MATERIAL KEY

CONCRETE
- 3.1 REINFORCED CONCRETE FOOTING (SEE STRUCTURAL)
- 3.2 REINF. CONC. SLAB (SEE STRUCTURAL)
- 3.3 EXPANSION JOINT MATERIAL W/ SEALANT JT.
- 3.4 REINF. 10 MIL VAPOR BARRIER OVER TREATED / COMPACTED FILL
- 3.5 REINF. POURED CONC. COLUMN / BEAM (SEE STRUCT.)

VERT. CONC. WALLS
- 4.1 REINF.'D 8"x8"x16" CONC. MASONRY W/ HORIZ. JT. REINF @ 16" OC./ REINF./ CONC. FILLED CELLS
- 4.2 REINF.'D 12"x8"x16" CONC. MASONRY W/ HORIZ. JT. REINF @ 16" OC./ REINF./ CONC. FILLED CELLS
- 4.3 REINF./ CONCRETE CAST BEAM/ COLUMN
- 4.4 REINF./ CONC. FILLED PRECAST CONC. LINTEL
- 4.5 PRECAST CONC./ COQUINA SHELL PANELS.
- 4.6 PRECAST CONC. SILL/ WALL CAP.
- 4.7 MASONRY REINF. CONC. FILLED CELLS

METALS
- 5.1 STEEL COLUMN/ BEAM (SEE STRUCT'L.)
- 5.2 MISC. STEEL ROOF FRAMING (SEE STRUCT.) LT. GA. TRUSSES OR STL. JOISTS
- 5.4 4" OR 6" 20 GA. MTL. STUDS @ 16" O.C. SEE WALL TYPE SCHEDULE
- 5.5 CONT. STUD TRACK ANCHOR TO DECK/ SLAB
- 5.6 1 1/2" 20 GA. MTL. ZEE FURRING CHANNELS
- 5.7 PRE-FIN. .032 ALUM. SNAP LOCK ROOFING PANELS
- 5.8 PRE-FIN. .032 ALUM. FLASHING / TRIM PRE-FIN. .040 ALUM. EDGE/ COPING CAP TRIM
- 5.9 PRE-FIN. 0.040 ALUM. GUTTERS & DOWN SPOUTS
- 5.10 BV CHAIN LINK GUARD RAIL SYSTEM, SEE DETAILS
- 5.11 1 1/2" MTL. DECKING/ IMPACT ENCLOSURE
- 5.12 6 & 8" CAST ALUM. SIGNAGE W/ HIDDEN FASTNERS

WOOD
- 6.1 MISC. WOOD ROOF BLOCKING (SEE STRUCT.)
- 6.2 MISC./ CONT. PT. 2X NAILERS/ BLOCKING
- 6.3 WOOD TRIM

THERM./ MOIST. PROT.
- 7.1 **MAIN ROOF SYSTEM :** 1 1/2" STL. DECKING W/ TAPERED 6" MIN. RIGID INSUL. R-30 AVER. ½" MINERAL BOARD SUBSTRATE PEEL AND STICK MEMBRANE .032 ALUM. SNAP LOCK ROOFING PANELS
- 7.2 **SECONDARY ROOF SYSTEM :** ROOF DECKING W/ BASE SHT. SLOPING/ RIGID INSUL. R-30 AVG. ½" MINERAL BOARD SUBSTRATE LOW SLOPE MOD. BIT. MEMBRANE ROOFING SYS.
- 7.3 PRE-ENG. 4" THK. SIPS ROOF SYSTEM
- 7.4 PRE-ENG. 4" THK. CANTILEVER AWNINGS W/ ANGLE BRACES BACK TO WALL
- 7.5 AIR/ VAPOR/ MOISTURE MEMB. SYS.
- 7.6 RIGID WALL INSULATION - 1½" THICK (TYP)
- 7.7 4" OR 6" BATT INSULATION
- 7.8 JOINT SEALANT W/ BACKER ROD CONT.
- 7.9 1/2" EXT. SHEATHING BOARD
- 7.10 SPRAY FOAM CLOSURE (SEAL ALL OPENINGS)

DOORS/WINDOWS
- 8.1 PREFIN. ALUM VINYL SCREEN ENCLOSURE SYS
- 8.2 PREFINISHED ALUM. / GLASS DOOR / FRAMES
- 8.3 PREFINISHED ALUM. WINDOW SYSTEM
- 8.4 PREFINISHED ALUM. LOUVER
- 8.5 SOLID CORE WOOD DOOR/ H.M. FRAME
- 8.6 OVERHEAD COILING PAINTED. DOOR SYSTEM

FINISHES
- 9.1 PAINTED 5/8" GYPSUM WALL BOARD
- 9.2 PAINTED 5/8" GWB. CEILING
- 9.3 PRE-FIN. FRP WALL PANELS
- 9.4 WALL/ FLOOR TILE (SEE SPECS.)
- 9.5 FLOOR FINISH (SEE SCHEDULE)
- 9.6 RESILIENT BASE
- 9.7 TILE BASE
- 9.8 PAINT/ EPOXY COATING (SEE SCHED.)
- 9.9 PAINTED EXPOSED STRUCTURE
- 9.10 3/4" (3) COAT CEMENT STUCCO SYS. W/ LATH / VINYL TRIM./ PREMIXED FINISH COAT
- 9.11 CEMENT BD. TRIM AT EXT. COLUMNS/ BEAMS EXT. DOOR/ WINDOW TRIM - SEE DETAILS)
- 9.12 2'X2' ACOUST. SUSP. CEILING SYSTEM TYPE A
- 9.13 2'X2' ACOUST. SUSP. CEILING SYSTEM TYPE B

✳ SEE STRUCTURAL DRAWINGS AND SPECIFICATIONS FOR MORE INFORMATION TYP.

HALL & OGLE ARCHITECTS, INC.
208 MAGNOLIA AVENUE
DAYTONA BEACH, FLORIDA 32114
www.hoarchitects.com
PH: (386) 255-6163
FAX: (386)257-5650
AA-C000925

SEAL

REVISIONS

NO.	DATE	DOCUMENT HISTORY DESCRIPTION

Replacement Fire Station # 96
City of Holly Hill, Fl.
1020 Daytona Avenue
Holly Hill , Florida

ARCHITECT OF RECORD
JOHN E. HALL AR0010727
DAVID D. OGLE AR93986

DESIGNED BY	DRAWN BY
JEH	SC/ JH
ISSUE DATE	AE PROJECT NUMBER
18-MAY-2023	2204

SHEET TITLE
BUILDING ELEVATIONS

DRAWING NO.
A3.0

Attachment: Exhibit C - Fire Station #96 Bid Set (2023-R-55 : Fire Station Construction)

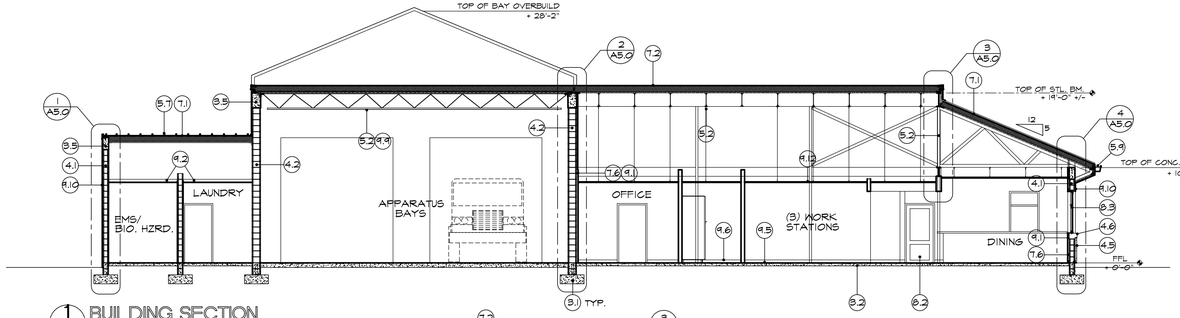

1 BUILDING SECTION
A4.0

SCALE: 1/8" = 1'-0"

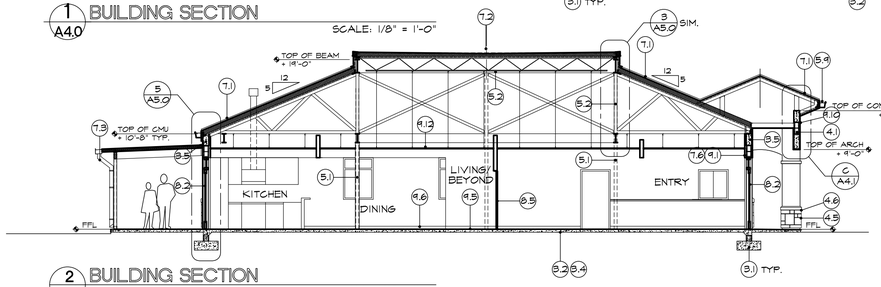

2 BUILDING SECTION
A4.0

SCALE: 1/8" = 1'-0"

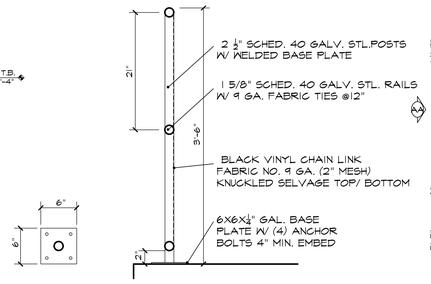

EE GUARD RAIL DETAILS
A4.0

SCALE: 1" = 1'-0"

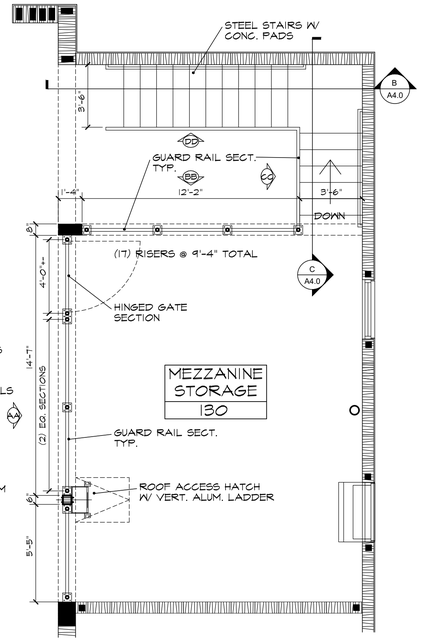

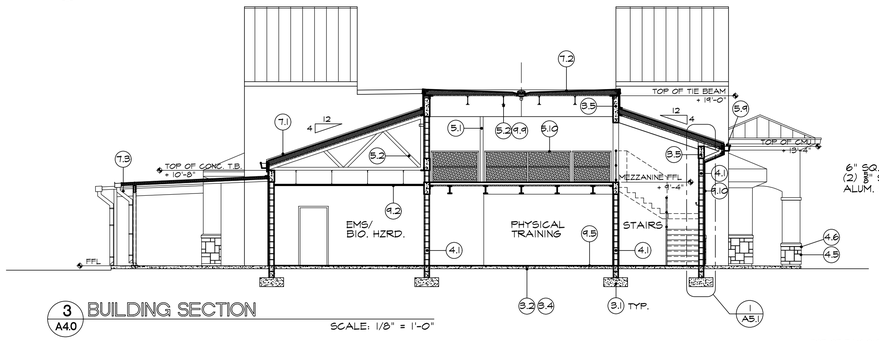

3 BUILDING SECTION
A4.0

SCALE: 1/8" = 1'-0"

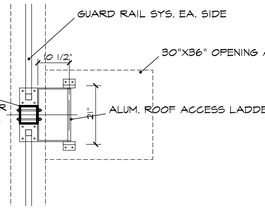

FF ACCESS LADDER
A4.0

SCALE: 1/2" = 1'-0"

MILL FIN. ALUM. ROOF ACCESS LADDER 20" W. W/ FLOOR & WALL BRACKETS/ ANCHORS MEET ANSI A14.3

A STAIR PLAN
A4.0

SCALE: 1/4" = 1'-0"

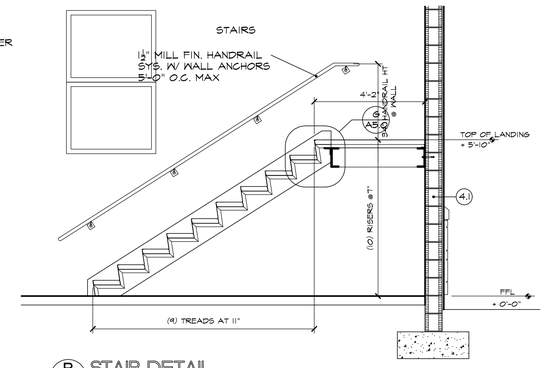

B STAIR DETAIL
A4.0

SCALE: 3/8" = 1'-0"

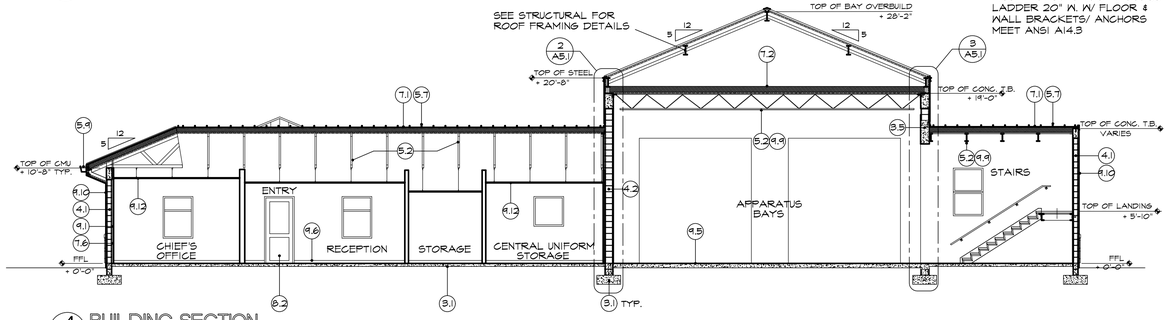

4 BUILDING SECTION
A4.0

SCALE: 1/8" = 1'-0"

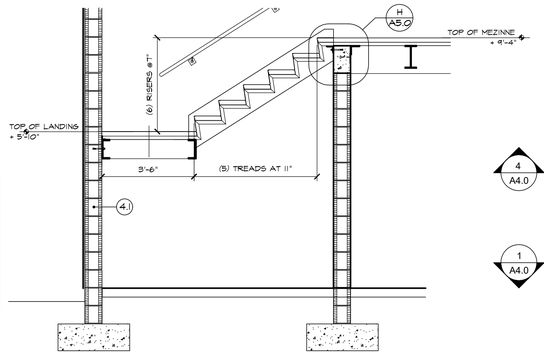

C STAIR DETAIL
A4.0

SCALE: 3/8" = 1'-0"

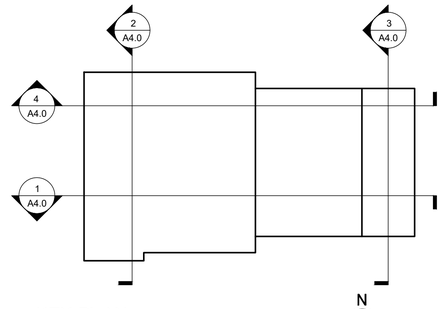

KEY PLAN

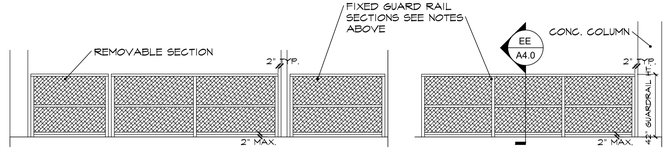

AA GUARD RAIL ELEVATION
A4.0

SCALE: 1/4" = 1'-0"

BB GUARD RAIL ELEVATION
A4.0

SCALE: 1/4" = 1'-0"

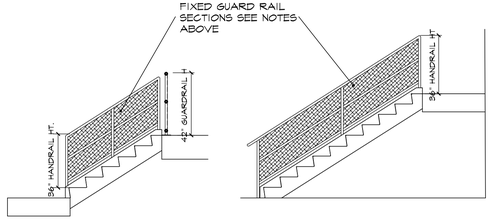

CC GUARD RAIL ELEVATION
A4.0

SCALE: 1/4" = 1'-0"

DD GUARD RAIL ELEVATION
A4.0

SCALE: 1/4" = 1'-0"

MATERIAL KEY

CONCRETE
- 9.1 REINFORCED CONCRETE FOOTING (SEE STRUCTURAL)
- 9.2 REINF. CONC. SLAB (SEE STRUCTURAL)
- 9.3 EXPANSION JOINT MATERIAL W/ SEALANT JT.
- 9.4 REINF. 10 MILL VAPOR BARRIER OVER TREATED / COMPACTED FILL
- 9.5 REINF. POURED CONC. COLUMN / BEAM (SEE STRUCT.)

VERT. CONC. WALLS
- 4.1 REINF.'D 8"x8"x16" CONC. MASONRY W/ HORIZ. JT. REINF @ 16" OC./ REINF./ CONC. FILLED CELLS
- 4.2 REINF.'D 12"x8"x16" CONC. MASONRY W/ HORIZ. JT. REINF @ 16" OC./ REINF./ CONC. FILLED CELLS
- 4.3 REINF./ CONCRETE CAST BEAM/ COLUMN
- 4.4 REINF./ CONC. FILLED PRECAST CONC. LINTEL
- 4.5 PRECAST CONC./ COQUINA SHELL PANELS.
- 4.6 PRECAST CONC. SILL/ WALL CAP.
- 4.7 MASONRY REINF. CONC. FILLED CELLS

METALS
- 5.1 STEEL COLUMN/ BEAM (SEE STRUCT'L.)
- 5.2 MISC. STEEL ROOF FRAMING (SEE STRUCT.) LT. GA. TRUSSES OR STL. JOISTS
- 5.4 4" OR 6" 20 GA. MTL. STUDS @ 16" O.C. SEE WALL TYPE SCHEDULE
- 5.5 CONT. STUD TRACK ANCHOR TO DECK/ SLAB
- 5.6 1 1/2" 20 GA. MTL. ZEE FURRING CHANNELS
- 5.7 PRE-FIN. .032 ALUM. SNAP LOCK ROOFING PANELS
- 5.8 PRE-FIN. .032 ALUM. FLASHING / TRIM PRE-FIN. .040 ALUM. EDGE/ COPING CAP TRIM
- 5.9 PRE-FIN. 0.040 ALUM. GUTTERS & DOWN SPOUTS
- 5.10 BV. CHAIN LINK GUARD RAIL SYSTEM, SEE DETAILS
- 5.11 1 1/2" MTL. DECKING/ IMPACT ENCLOSURE
- 5.12 6 & 8" CAST ALUM. SIGNAGE W/ HIDDEN FASTNERS

WOOD
- 6.1 MISC. WOOD ROOF BLOCKING (SEE STRUCT.)
- 6.2 MISC./ CONT. PT. 2X NAILERS/ BLOCKING
- 6.3 WOOD TRIM

THERM./ MOIST. PROT.
- 7.1 **MAIN ROOF SYSTEM :** 1 1/2" STL. DECKING W/ TAPERED 6" MIN. RIGID INSUL. R-30 AVER. ½" MINERAL BOARD SUBSTRATE PEEL AND STICK MEMBRANE .032 ALUM. SNAP LOCK ROOFING PANELS
- 7.2 **SECONDARY ROOF SYSTEM :** ROOF DECKING W/ BASE SHT. SLOPING/ RIGID INSUL. R-30 AVG. ½" MINERAL BOARD SUBSTRATE LOW SLOPE MOD. BIT. MEMBRANE ROOFING SYS.
- 7.3 PRE-ENG. 4" THK. SIPS ROOF SYSTEM
- 7.4 PRE-ENG. 4" THK. CANTILEVER AWNINGS W/ ANGLE BRACES BACK TO WALL
- 7.5 AIR/ VAPOR/ MOISTURE MEMB. SYS.
- 7.6 RIGID WALL INSULATION - 1½" THICK (TYP)
- 7.7 4" OR 6" BATT INSULATION
- 7.8 JOINT SEALANT W/ BACKER ROD CONT.
- 7.9 1/2" EXT. SHEATHING BOARD
- 7.10 SPRAY FOAM CLOSURE (SEAL ALL OPENINGS)

DOORS/WINDOWS
- 8.1 PREFIN. ALUM VINYL SCREEN ENCLOSURE SYS
- 8.2 PREFINISHED ALUM. / GLASS DOOR / FRAMES
- 8.3 PREFINISHED ALUM. WINDOW SYSTEM
- 8.4 PREFINISHED ALUM. LOUVER
- 8.5 SOLID CORE WOOD DOOR/ H.M. FRAME
- 8.6 OVERHEAD COILING PAINTED. DOOR SYSTEM

FINISHES
- 9.1 PAINTED 5/8" GYPSUM WALL BOARD
- 9.2 PAINTED 5/8" GWB. CEILING
- 9.3 PRE-FIN. FRP WALL PANELS
- 9.4 WALL/ FLOOR TILE (SEE SPECS.)
- 9.5 FLOOR FINISH (SEE SCHEDULE)
- 9.6 RESILIENT BASE
- 9.7 TILE BASE
- 9.8 PAINT/ EPOXY COATING (SEE SCHED.)
- 9.9 PAINTED EXPOSED STRUCTURE
- 9.10 3/4" (3) COAT CEMENT STUCCO SYS. W/ LATH / VINYL TRIM./ PREMIXED FINISH COAT CEMENT BD. TRIM AT EXT. COLUMNS/ BEAMS EXT. DOOR/ WINDOW TRIM - SEE DETAILS)
- 9.11 2'X2' ACOUST. SUSP. CEILING SYSTEM TYPE A
- 9.12 2'X2' ACOUST. SUSP. CEILING SYSTEM TYPE B
- ✳ SEE STRUCTURAL DRAWINGS AND SPECIFICATIONS FOR MORE INFORMATION TYP.

HALL & OGLE ARCHITECTS, INC.
208 MAGNOLIA AVENUE
DAYTONA BEACH, FLORIDA 32114
PH:(386) 255-6163
FAX:(386)257-5650
AA-C000925
www.hoarchitects.com

SEAL

REVISIONS

NO.	DATE	DESCRIPTION

Replacement Fire Station # 96
City of Holly Hill, Fl.
1020 Daytona Avenue
Holly Hill , Florida

ARCHITECT OF RECORD
JOHN E. HALL AR0010727
DAVID D. OGLE AR93986

DESIGNED BY	DRAWN BY
JEH	SC/ JH
ISSUE DATE	AE PROJECT NUMBER
18-MAY-2023	2204

SHEET TITLE
BUILDING SECTIONS

DRAWING NO.
A4.0

Attachment: Exhibit C - Fire Station #96 Bid Set (2023-R-55 : Fire Station Construction)

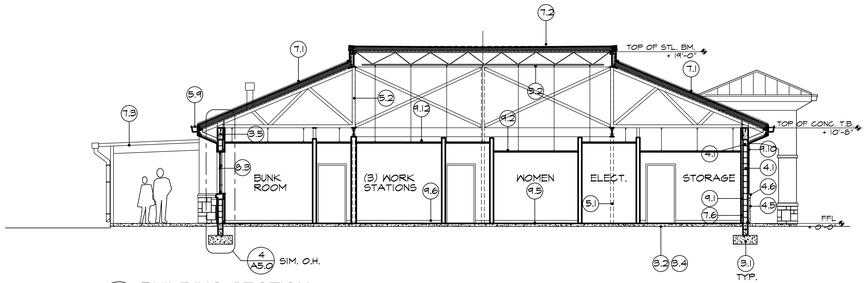

1 A4.1 BUILDING SECTION

SCALE: 1/8" = 1'-0"

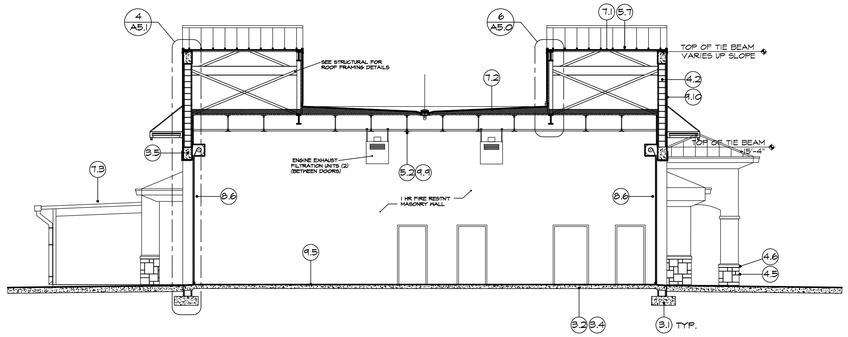

2 A4.1 BUILDING SECTION

SCALE: 1/8" = 1'-0"

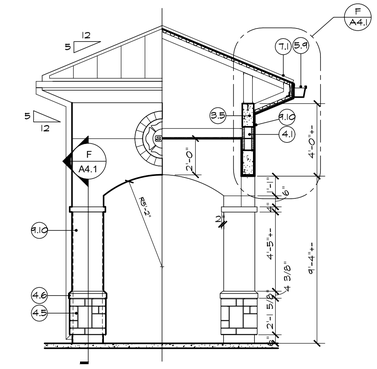

TOWER ELEVATION/ SECTION

SCALE: 1/4" = 1'-0"

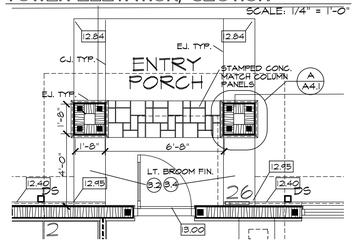

TOWER FLOOR PLAN

SCALE: 1/4" = 1'-0"

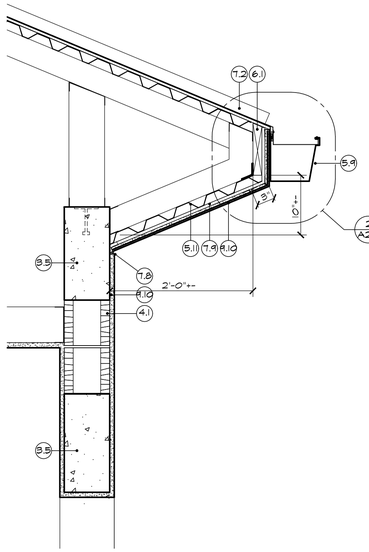

F A4.1 PLAN DETAIL

SCALE: 1" = 1'-0"

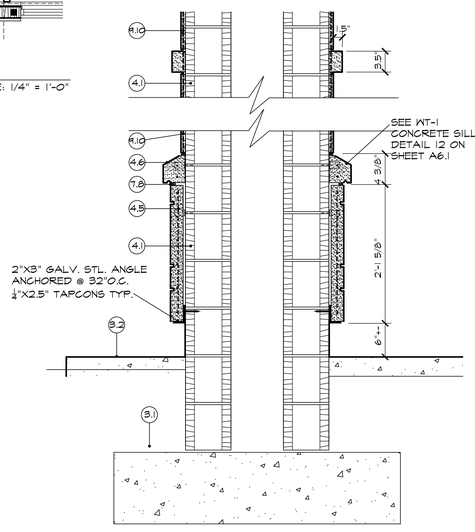

E A4.1 PLAN DETAIL

SCALE: 1" = 1'-0"

MATERIAL KEY

CONCRETE
- 3.1 REINFORCED CONCRETE FOOTING (SEE STRUCTURAL)
- 3.2 REINF. CONC. SLAB (SEE STRUCTURAL)
- 3.3 EXPANSION JOINT MATERIAL W/ SEALANT JT.
- 3.4 REINF. 10 MILL VAPOR BARRIER OVER TREATED / COMPACTED FILL
- 3.5 REINF. POURED CONC. COLUMN / BEAM (SEE STRUCT.)

VERT. CONC. WALLS
- 4.1 REINF.'D 8"x8"x16" CONC. MASONRY W/ HORIZ. JT. REINF @ 16" OC./ REINF./ CONC. FILLED CELLS
- 4.2 REINF.'D 12"x8"x16" CONC. MASONRY W/ HORIZ. JT. REINF @ 16" OC./ REINF./ CONC. FILLED CELLS
- 4.3 REINF./ CONCRETE CAST BEAM/ COLUMN
- 4.4 REINF./ CONC. FILLED PRECAST CONC. LINTEL
- 4.5 PRECAST CONC./ COQUINA SHELL PANELS.
- 4.6 PRECAST CONC. SILL/ WALL CAP.
- 4.7 MASONRY REINF. CONC. FILLED CELLS

METALS
- 5.1 STEEL COLUMN/ BEAM (SEE STRUCT'L.)
- 5.2 MISC. STEEL ROOF FRAMING (SEE STRUCT.) LT. GA. TRUSSES OR STL. JOISTS
- 5.4 4" OR 6" 20 GA. MTL. STUDS @ 16" O.C. SEE WALL TYPE SCHEDULE
- 5.5 CONT. STUD TRACK ANCHOR TO DECK/ SLAB
- 5.6 1 1/2" 20 GA. MTL. ZEE FURRING CHANNELS
- 5.7 PRE-FIN. .032 ALUM. SNAP LOCK ROOFING PANELS
- 5.8 PRE-FIN. .032 ALUM. FLASHING / TRIM PRE-FIN. .040 ALUM. EDGE/ COPING CAP TRIM
- 5.9 PRE-FIN. 0.040 ALUM. GUTTERS & DOWN SPOUTS
- 5.10 BV. CHAIN LINK GUARD RAIL SYSTEM, SEE DETAILS
- 5.11 1 1/2" MTL. DECKING/ IMPACT ENCLOSURE
- 5.12 6 & 8" CAST ALUM. SIGNAGE W/ HIDDEN FASTNERS

WOOD
- 6.1 MISC. WOOD ROOF BLOCKING (SEE STRUCT.)
- 6.2 MISC./ CONT. PT. 2X NAILERS/ BLOCKING
- 6.3 WOOD TRIM

THERM./ MOIST. PROT.
- 7.1 **MAIN ROOF SYSTEM :** 1 1/2" STL. DECKING W/ TAPERED 6" MIN. RIGID INSUL. R-30 AVER. 1/2" MINERAL BOARD SUBSTRATE PEEL AND STICK MEMBRANE .032 ALUM. SNAP LOCK ROOFING PANELS
- 7.2 **SECONDARY ROOF SYSTEM :** ROOF DECKING W/ BASE SHT. SLOPING/ RIGID INSUL. R-30 AVG. 1/2" MINERAL BOARD SUBSTRATE LOW SLOPE MOD. BIT. MEMBRANE ROOFING SYS.
- 7.3 PRE-ENG. 4" THK. SIPS ROOF SYSTEM
- 7.4 PRE-ENG. 4" THK. CANTILEVER AWNINGS W/ ANGLE BRACES BACK TO WALL
- 7.5 AIR/ VAPOR/ MOISTURE MEMB. SYS.
- 7.6 RIGID WALL INSULATION - 1 1/2" THICK (TYP)
- 7.7 4" OR 6" BATT INSULATION
- 7.8 JOINT SEALANT W/ BACKER ROD CONT.
- 7.9 1/2" EXT. SHEATHING BOARD
- 7.10 SPRAY FOAM CLOSURE (SEAL ALL OPENINGS)

DOORS/WINDOWS
- 8.1 PREFIN. ALUM VINYL SCREEN ENCLOSURE SYS
- 8.2 PREFINISHED ALUM. / GLASS DOOR / FRAMES
- 8.3 PREFINISHED ALUM. WINDOW SYSTEM
- 8.4 PREFINISHED ALUM. LOUVER
- 8.5 SOLID CORE WOOD DOOR/ H.M. FRAME
- 8.6 OVERHEAD COILING PAINTED. DOOR SYSTEM

FINISHES
- 9.1 PAINTED 5/8" GYPSUM WALL BOARD
- 9.2 PAINTED 5/8" GWB. CEILING
- 9.3 PRE-FIN. FRP WALL PANELS
- 9.4 WALL/ FLOOR TILE (SEE SPECS.)
- 9.5 FLOOR FINISH (SEE SCHEDULE)
- 9.6 RESILIENT BASE
- 9.7 TILE BASE
- 9.8 PAINT/ EPOXY COATING (SEE SCHED.)
- 9.9 PAINTED EXPOSED STRUCTURE
- 9.10 3/4" (3) COAT CEMENT STUCCO SYS. W/ LATH / VINYL TRIM./ PREMIXED FINISH COAT
- 9.11 CEMENT BD. TRIM AT EXT. COLUMNS/ BEAMS EXT. DOOR/ WINDOW TRIM - SEE DETAILS)
- 9.12 2'X2' ACOUST. SUSP. CEILING SYSTEM TYPE A
- 9.13 2'X2' ACOUST. SUSP. CEILING SYSTEM TYPE B

* SEE STRUCTURAL DRAWINGS AND SPECIFICATIONS FOR MORE INFORMATION TYP.

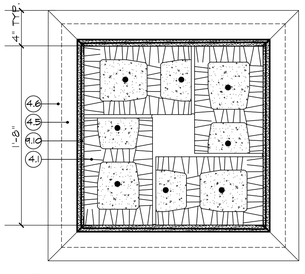

A A4.1 DETAIL

SCALE: 1 1/2" = 1'-0"

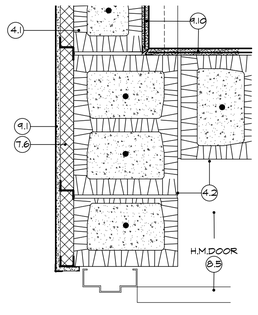

B A4.1 DETAIL

SCALE: 1 1/2" = 1'-0"

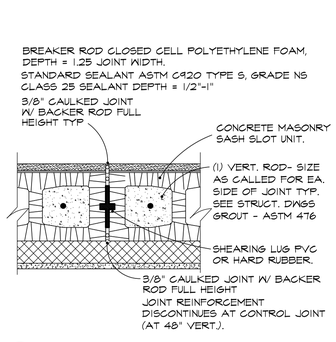

C A4.1 DETAIL — TYP. MASONRY CONTROL JOINT

SCALE: 1 1/2" = 1'-0"

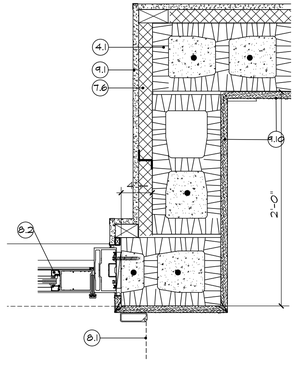

D A4.1 PLAN DETAIL

SCALE: 1 1/2" = 1'-0"

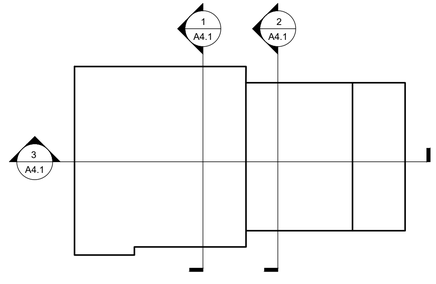

KEY PLAN

N

HALL & OGLE ARCHITECTS, INC.
208 MAGNOLIA AVENUE
DAYTONA BEACH, FLORIDA 32114
www.hoarchitects.com
PH.(386) 255-6163
FAX.(386)257-5650
AA-C000925

SEAL

REVISIONS

NO.	DATE	DESCRIPTION

Replacement Fire Station # 96
City of Holly Hill, Fl.
1020 Daytona Avenue
Holly Hill , Florida

ARCH/ENGR OF RECORD
JOHN E. HALL AR0010727
DAVID D. OGLE AR93986

DESIGNED BY	DRAWN BY
JEH	SC/ JH
ISSUE DATE	AE PROJECT NUMBER
18-MAY-2023	2204

SHEET TITLE
BUILDING SECTIONS

DRAWING NO.
A4.1

Attachment: Exhibit C - Fire Station #96 Bid Set (2023-R-55 : Fire Station Construction)

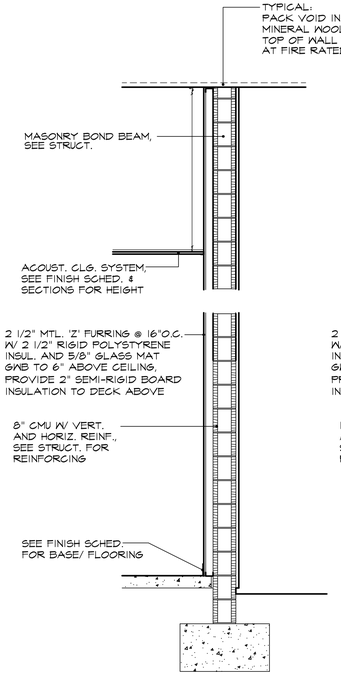

1 EXTERIOR 8" CMU WALL SYSTEM
SEE DETAILS ON PARTITION TYPES

1A EXTERIOR INSULATED 8" CMU WALL SYSTEM
SEE DETAILS ON PARTITION TYPES

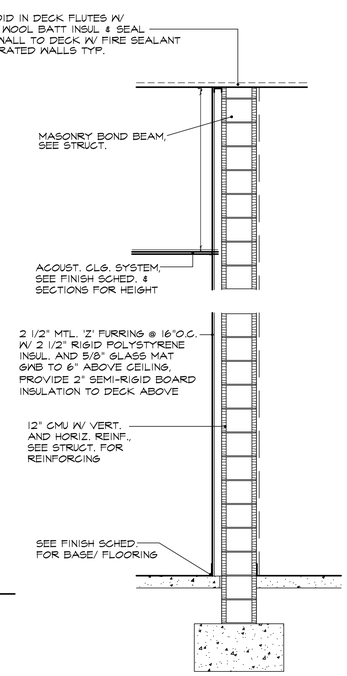

2 INTERIOR INSULATED 12" CMU WALL SYSTEM
SEE DETAILS ON PARTITION TYPES
(1) HR. RATED (PAINTED)

2A EXTERIOR 12" CMU WALL SYSTEM
SEE DETAILS ON PARTITION TYPES

3 INTERIOR 12" CMU WALL SYSTEM
SEE DETAILS ON PARTITION TYPES

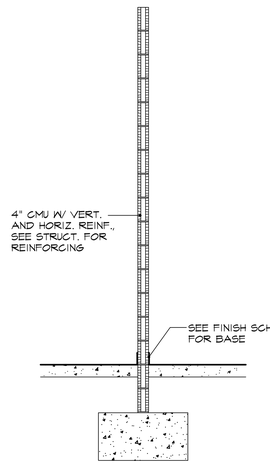

3A INTERIOR 4" CMU WALL SYSTEM
SEE DETAILS ON PARTITION TYPES

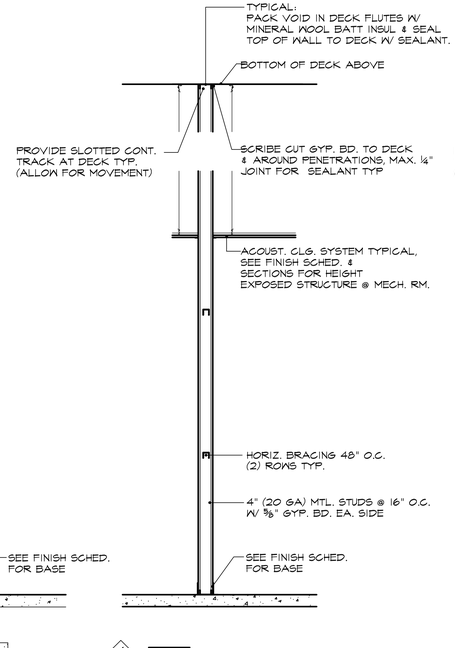

4 4" 20 GA. MTL. STUDS @ 16" O.C. W/ ⅝"
GYP. BD. EA. SIDE

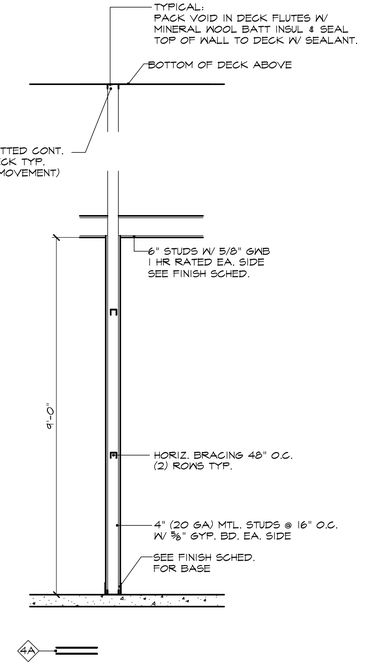

4A 4" 20 GA. MTL. STUDS @ 16" O.C. W/ ⅝" 1 HR
RATED GYP. BD.

WALL/ PARTITION TYPES SCHEDULE

CMU WALLS

WALL TAG	DESCRIPTION	RATING
1	8x8x16 CMU MASONRY W/ SAND FINISH STUCCO OR FACE APPLIED STONE VENEER SOME AREAS (SEE ELEVATIONS FOR LOCATIONS) AND PAINTED BLOCK INTERIOR	NR
1A	8x8x16 CMU MASONRY W/ SAND FINISH STUCCO OR FACE APPLIED STONE VENEER (EXTERIOR) AND (INTERIOR) 2 1/2" RIGID INSULATION, 2 1/2" METAL 'Z' FURRING, 5/8" GNB W/ PLASTER FINISH.	NR
2	12x8x16 CMU PARTITION, 2 HR. RATING OF CMU PER UL #U906, OR HAVE A CALCULATED FIRE RESISTANCE IN COMPLIANCE WITH FBC 709, TABLE 709.3.1. SUPPORT AREA SIDE TO HAVE 2 1/2" RIGID INSULATION, 2 1/2" METAL 'Z' FURRING, 5/8" GNB W/ PLASTER FINISH AND PAINTED CMU AT EXPOSED LOCATIONS.	1 HR
2A	12x8x16 CMU MASONRY W/ SAND FINISH STUCCO OR FACE APPLIED STONE VENEER (EXTERIOR) AND PAINTED CMU AT EXPOSED LOCATIONS (INTERIOR).	NR
3	12x8x16 CMU TO ROOF DECK PAINTED CMU AT EXPOSED LOCATION	NR
3A	4" CMU PARTITION TO 10'-0" A.F.F.	NR

METAL STUD WALLS

WALL TAG	DESCRIPTION	RATING
4	4" 20 GA. MTL. STUDS @ 16" O.C. TO LT. GA. STRUCTURE ABOVE W/ ⅝" GYP. BD. EACH SIDE TO 12" ABOVE CEILING	NR
4A	4" 20 GA. MTL. STUDS @ 16" O.C. TO LT. GA. TO STRUCTURE ABOVE W/ ⅝" 1 HR RATED GNB. SEAL TIGHT UL 419 (SEE SHEET A4.2) GNB TO RATED CEILING OR STRUCTURE ABOVE.	NR
5	4" 20 GA. MTL. STUDS @ 16" O.C. TO 12' AFF OR STRUCTURE ABOVE W/ ⅝" GYP. BD. EACH SIDE. PROVIDE 3½" SOUND BATT INSULATION TO CEILING/ ROOF.	NR
6	6" MTL. STUDS @ 16" O.C. TO 12' AFF OR STRUCTURE ABOVE W/ ⅝" GYP. BD. EA. SIDE.	NR
7	3 5/8" 20 GA. MTL. STUDS @ 16" O.C. TO 12' AFF OR STRUCTURE ABOVE W/ MOIST. RESIST. GNB. ON (1) SIDE OF STUD- CHASE WALL SYSTEM. CERAMIC TILE FINISH AT WET WALL TYP. SEE TOILET PLANS. SEAL ALL PENETRATIONS AND JOINTS FROM TOP OF C.M.U. TO U/S ROOF DECK.	NR

PARTITION NOTES:
1. SEE FINISH SCHEDULE AND SECTIONS FOR FINISHES TYP.
2. WHERE 2 1/2" RIGID INSULATION IS CALLED FOR ON EXTERIOR CMU WALLS, TERMINATE RIGID INSULATION AND GLASS MATT GNB 6" ABOVE CEILING AND CONTINUE WITH SEMI-RIGID UN-FACED FIBERGLASS BOARD INSULATION INSTALLED WITH IMPALING CLIPS TO UNDERSIDE OF STRUCTURE. PROVIDE 2" THICK JOHNS MANVILLE INSUL-SHIELD 300 OR EQUAL.
3. WALL TYPES 4, 4A, AND 5 TO BE IMPACT RESISTANT CORRIDOR SIDE OF WALL.

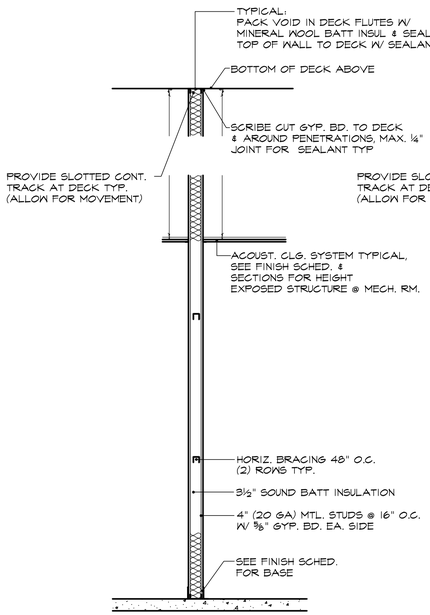

5 4" 20 GA. MTL. STUDS @ 16" O.C. W/ ⅝" IMPACT
RESIST. GYP. BD. EA. SIDE WITH 3 1/2" SOUND BATT
INSULATION FULL HEIGHT

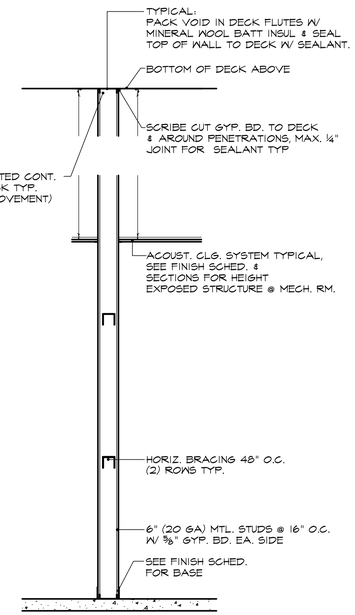

6 6" MTL. STUDS @ 16" O.C. W/ ⅝" GYP.
BD. EA. SIDE

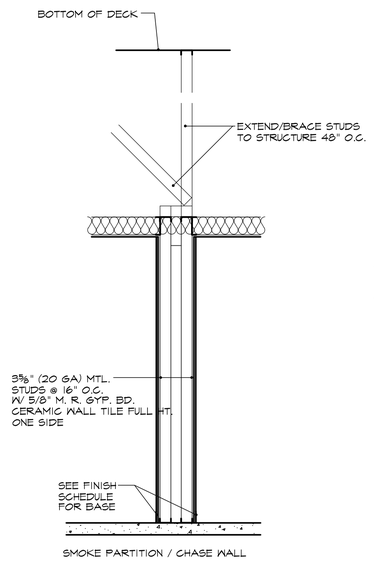

SMOKE PARTITION / CHASE WALL

7 4" (20 GA) MTL. STUDS @ 16" O.C. W/ ⅝" MOIST. REIST.
GNB ONE SIDE W/ CERAMIC WALL TILE FULL HT. AT WET WALL.
EXTEND/ BRACE STUDS AT 48" O.C. ONE WALL TYP.

Design No. U419
Non Bearing Wall Ratings—1, 2, 3 or 4 Hr (See Items 3 & 4)

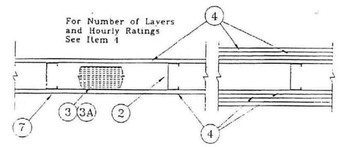

1. **Floor and Ceiling Runners**—(Not shown)—Channel shaped, fabricated from min 25 MSG corrosion-protected steel, min width to accommodate stud size, with min 1 in. long legs, attached to floor and ceiling with fasteners 24 in. OC max.
2. **Steel Studs**—Channel shaped, fabricated from min 25 MSG corrosion-protected steel, min width as indicated under Item 4, min 1-1/4 in. flanges and 1/4 in. return, spaced a max of 24 in. OC. Studs to be cut 3/8 to 3/4 in. less than assembly height.
3. **Batts and Blankets***—(Required as indicated under Item 4)—Mineral wool batts, friction fitted between studs and runners. Min nom thickness as indicated under Item 4. See **Batts and Blankets (BKNV or BZJZ) Categories** for names of Classified companies.

3A. **Batts and Blankets***—(Optional)—Placed in stud cavities, any glass fiber or mineral wool insulation bearing the UL Classification Marking as to Surface Burning Characteristics and/or Fire Resistance. See **Batts and Blankets (BKNV or BZJZ) Categories** for names of Classified companies.

4. **Wallboard, Gypsum***—gypsum panels with beveled, square or tapered edges, applied vertically or horizontally. Vertical joints centered over studs and staggered one stud cavity on opposite sides of studs. Vertical joints in adjacent layers (multilayer systems) staggered one stud cavity. Horizontal edge joints and horizontal butt joints on opposite sides of studs staggered a min of 12 in. Horizontal edge joints and horizontal butt joints in adjacent layers (multilayer systems) staggered a min of 12 in. The thickness and number of layers for the 1 hr, 2 hr, 3 hr and 4 hr ratings are as follows:

Wallboard Protection on Each Side of Wall

Rating	Min Stud Depth	No. Of Layers And Thickness Of Panels	Min Thickness Of Insulation (Item 3B)
1	3-1/2	1 layer, 5/8 in. thick	Optional
1	2-1/2	1 layer, 1/2 in. thick	1-1/2 in.
2	1-5/8	2 layers, 1/2 in. thick	Optional
2	1-5/8	2 layers, 5/8 in. thick	Optional
2	3-1/2	1 layer, 3/4 in. thick	3 in.
3	1-5/8	3 layers, 1/2 in. thick	Optional
3	1-5/8	2 layers, 3/4 in. thick	Optional
4	1-5/8	4 layers, 1/2 in. thick	Optional
4	2-1/2	2 layers, 3/4 in. thick	2 in.

Canadian Gypsum Co.—1/2 in. thick Type C, WRC or IP-X2; 5/8 in. thick Type SCX, SHX, WRX, IP-X1, AR, C, WRC or IP-X2; 3/4 in. thick ULTRACODE or Type IP-X3
United States Gypsum Co.—1/2 in. thick Type C, WRC or IP-X2; 5/8 in. thick Type SCX, SHX, WRX, IP-X1, AR, C, WRC or IP-X2; 3/4 in. thick ULTRACODE or Type IP-X3
Yeso Panamericano SA de CV—1/2 in. thick Type C, WRC or IP-X2; 5/8 in. thick Type SCX, SHX, WRX, IP-X1, AR, C, WRC or IP-X2; 3/4 in. thick ULTRACODE or Type IP-X3.

5. **Fasteners**—(Not shown)—Type S or S-12 self-drilling, self-tapping steel screws used to attach panels to studs (Item 2) or furring channels (Item 6). **Single layer systems:** 1 in. long for 1/2 and 5/8 in. thick panels or 1-1/4 in. long for 3/4 in. thick panels, spaced 8 in. OC when panels are applied horizontally, or 12 in. OC when panels are applied vertically. **Two layer systems:** First layer- 1 in. long for 1/2 and 5/8 in. thick panels or 1-1/4 in. long for 3/4 in. thick panels, spaced 16 in. OC. Second layer- 1-5/8 in. long for 1/2 in. thick panels or 2-1/4 in. long for 3/4 in. thick panels, spaced 16 in. OC with screws offset 8 in. from first layer. **Three-layer systems:** First layer- 1 in. long for 1/2 in. thick panels, spaced 24 in. OC. Second layer- 1-5/8 in. long for 1/2 in. thick panels, spaced 24 in. OC. Third layer- 2-1/4 in. long for 1/2 in. thick panels, spaced 12 in. OC. Screws offset min 6 in. from layer below. **Four-layer systems:** First layer- 1 in. long for 1/2 in. thick panels, spaced 24 in. OC. Second layer- 1-5/8 in. long for 1/2 in. thick panels, spaced 24 in. OC. Third layer- 2-1/4 in. long for 1/2 in. thick panels, spaced 24 in. OC. Fourth layer- 2-5/8 in. long for 1/2 in. thick panels, spaced 12 in. OC. Screws offset min 6 in. from layer below.
6. **Furring Channels**—(Optional, not shown, for single or double layer systems)—Resilient furring channels fabricated from min 25 MSG corrosion-protected steel, spaced vertically a max of 24 in. OC. Flange portion attached to each intersecting stud with 1/2 in. long Type S-12 panhead steel screws.
7. **Joint Tape and Compound**—Vinyl or casein, dry or premixed joint compound applied in two coats to joints and screw heads of outer layers. Paper tape, nom 2 in. wide, embedded in first layer of compound over all joints of outer panels.
8. **Siding, Brick or Stucco**—(Optional, not shown) —Aluminum, vinyl or steel siding, brick veneer or stucco, meeting the requirements of local code agencies, installed over gypsum panels. Brick veneer attached to studs with corrugated metal wall ties attached to each stud with steel screws, not more than each sixth course of brick.
9. **Caulking and Sealants***—(Optional, not shown)—A bead of acoustical sealant applied around the partition perimeter for sound control.
United States Gypsum Co.—Type AS

*Bearing the UL Classification Marking

GENERAL NOTES:

1. TYPICAL: PROVIDE IMPACT RESISTANT GYP. BD. WHERE INDICATED FROM FINISH FLOOR TO 8'-0" AFF.
2. NOT USED.
3. TYPICAL: REFER TO LIFE SAFETY PLANS FOR EXTENT OF RATED & SMOKE PARTITIONS.
4. TYPICAL: MOISTURE RESISTANT GYP. BD. AT ALL TOILET ROOM WALLS TO RECEIVE PAINT & CEILINGS.
5. TYPICAL: CEMENT BD. AT ALL WALLS TO RECEIVE CERAMIC TILE.
6. TYPICAL: REFER TO FINISH SCHEDULE FOR ADDITIONAL INFORMATION.
7. TYP.: PROVIDE METAL STUD KICKERS AT 4'-0" O.C. EA. SIDE OF WALL FOR BRACING TO STRUCTURE ABOVE AS REQ.

HALL & OGLE ARCHITECTS, INC.
208 MAGNOLIA AVENUE
DAYTONA BEACH, FLORIDA 32114
www.hoarchitects.com
PH:(386) 255-6163
FAX:(386)257-5650
AA-C000925

SEAL

REVISIONS

NO.	DATE	DESCRIPTION

Replacement Fire Station # 96
City of Holly Hill, Fl.
1020 Daytona Avenue
Holly Hill , Florida

ARCHITECT OF RECORD
JOHN E. HALL AR0010727
DAVID D. OGLE AR93986

DESIGNED BY	DRAWN BY
JEH	SC/ JH
ISSUE DATE	AE PROJECT NUMBER
18-MAY-2023	2204

SHEET TITLE
WALL PARTITION TYPES

DRAWING NO.
A4.2

Attachment: Exhibit C - Fire Station #96 Bid Set (2023-R-55 : Fire Station Construction)

PROJECT SPECIFIC REQUIRMENTS FOR PENETRATION FIRESTOP:

1) OPTIONAL SLEEVE REFRENCED IN NOTE 1A OF UL DETAIL IS NOT OPTIONAL FOR THIS PROJECT AND SHALL BE PROVIDED.

SYSTEM NO. C-AJ-3021
(FORMERLY SYSTEM NO. 204)
F RATINGS - 2 HR
T RATINGS - 0 HR

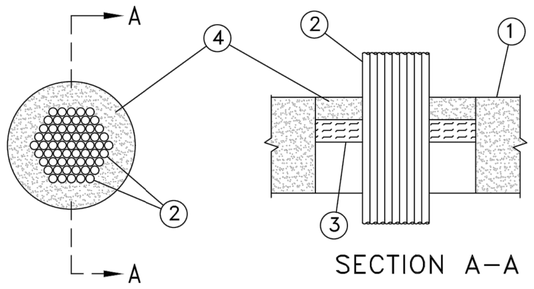

1. Floor or Wall Assembly – Min 4–1/2 in. thick lightweight or normal weight (100–150 pcf) concrete. Wall may also be constructed of any UL Classified Concrete Blocks*. Max diam of opening is 6–1/4 in. See Concrete Blocks* (CAZT) category in the Fire Resistance Directory for names of manufacturers.

1A. Steel Sleeve (Optional, Not Shown) – Nom 4 in. diam (or smaller) Schedule 10 (or heavier) steel pipe sleeve cast into floor or wall assembly. Sleeve to be flush with floor or wall surfaces.

2. Cables – Min 12 percent to max 40 percent fill area per max 4 in. diam steel sleeved through opening. Min 20 percent to max 40 percent fill area per max 6–1/4 in. diam unsleeved through opening. Cables to be rigidly supported on both sides of floor or wall assembly. The following types and sizes of cables may be used:
   A. Max 7/C No. 12 AWG multiple copper conductor power and control cables with polyvinyl chloride (PVC) insulation and jacket materials.
   B. Multiple fiber optical communication cables jacketed with PVC and having a max outside diam of 3/4 in.
   C. Max 200 pair No. 24 AWG copper conductor telephone cables with PVC insulation and jacket materials.
   D. Max 350 kcmil power cables with PVC insulation and jacket material.

3. Packing Material – Nom 1 in. thickness of ceramic (aluminum silica) fiber blanket or mineral wool batt insulation firmly packed into opening as a permanent form. Packing material to be recessed min 1 in. from top surface of floor or sleeve or from both surfaces of wall.

4. Fill, Void, or Cavity Materials* – Putty – Moldable putty material kneaded by hand and applied to fill annular space (and interstices between cables to max extent possible) to a min depth of 1 in., flush with top surface of floor or sleeve in wall assemblies, required putty depth to be installed symmetrically on both sides of wall.

MINNESOTA MINING & MFG CO – Type MPS–2+
*Bearing the UL Classification Marking

SYSTEM NO C-AJ-1027
F RATING--3 HR
T RATING--0 HR

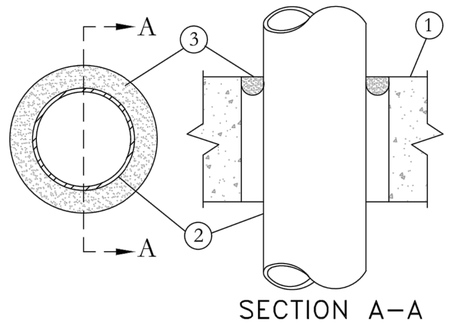

1. Floor or Wall Assembly – Min 4–1/2 in. thick lightweight or normal weight (100–150 pcf) concrete. Wall may also be constructed of any UL Classified Concrete Blocks*. Max diam of through opening is 12–1/4 in. See Concrete Blocks (CAZT) category in Fire Resistance Directory for names of manufacturers.
2. Through Penetrants – One metallic pipe, conduit or tubing to be installed either concentrically or eccentrically within the firestop system. Min annular space between pipe, conduit or tubing and edge of opening is 0 in. (point contact). Max annular space is dependent on pipe, conduit or tubing type and size as well as the F Rating of the system, as shown in the table below. Pipe, conduit or tubing to be rigidly supported on both sides of wall assembly. The following types and sizes of metallic pipes, conduits or tubing may be used:
   A. Steel Pipe – Nom 10 in. diam (or smaller) Schedule 10 (or heavier) steel pipe.
   B. Conduit – Nom 6 in. diam (or smaller) rigid steel conduit.
   C. Conduit – Nom 4 in. diam (or smaller) steel electrical metallic tubing or steel conduit.
   D. Copper – Tubing Nom 3 in. diam (or smaller) Type L (or heavier) copper tubing.
   E. Copper – Pipe Nom 3 in. diam (or smaller) Regular (or heavier) copper pipe.
   F. Iron Pipe – Nom 10 in. diam (or smaller) cast or ductile iron pipe.

Pipe, Conduit or Tubing Type	Max. Nom. Pipe, Conduit or Tubing Dia. (Inches)	F Rating Hr	Max Annular Space (Inches)
2–1/2	1/2–12	3	3/4
2–1/2	1/2–12	3	3/4
4–1/2	1/2–6	3	1–1/2
4–1/2	1/2–12	3	3/4
4–1/2	1/2–20	2	7/8

3. Fill, Void or Cavity Materials* – Putty – Moldable putty material kneaded by hand and applied to fill annular space to a min depth of 1 in., flush with top surface of floor. In wall assemblies, required putty thickness to be installed symmetrically on both sides of wall.

MINNESOTA MINING & MFG CO – MPS–2+
*Bearing the UL Classification Marking

PENETRATION FIRESTOP FOR 10" MAX. DIA. METAL PIPE/CONDUIT THROUGH A CONCRETE WALL
N.T.S. UL SYSTEM #202 (1 OR 2 HOUR RATING)

PENETRATION FIRESTOP FOR FIBER OPTIC & SIGNAL CABLE BUNDLE THROUGH A MAX. 6-1/4" DIA. OPENING IN A CONCRETE WALL W/STEEL SLEEVE
UL SYSTEM #204 (1 AND 2 HOUR RATING)

SYSTEM NO. W-L-3031
(FORMERLY SYSTEM NO. 589)
F RATINGS-- 1 AND 2 HR (SEE ITEM 1)
T RATINGS-- 1/2, 1, 1-1/2 HR (SEE ITEM 3)

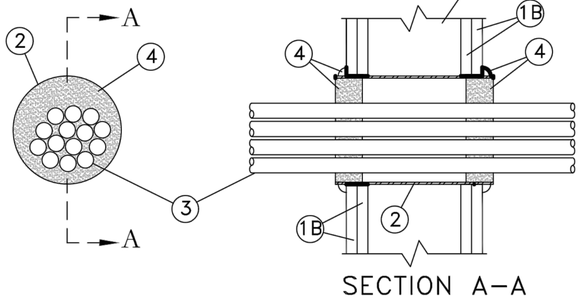

1. Wall Assembly – The 1 or 2 hr fire-rated gypsum wallboard/stud wall assembly shall be constructed of the materials and in the manner described in the individual U300 or U400 Series Wall or Partition Design in the UL Fire Resistance Directory and shall include the following construction features:
   A. Studs – Wall framing may consist of either wood studs or steel channel studs. Wood studs to consist of nom 2 by 4 in. lumber spaced 16 in. OC with nom 2 by 4 in. lumber end plates and cross braces. Steel studs to be min 3–1/2 in. wide by 1–3/8 in. deep channels spaced max 24 in. OC.
   B. Gypsum Board* – 5/8 in. thick, 4 ft wide with square or tapered edges. The gypsum wallboard type, thickness, number of layers, fastener type and sheet orientation shall be as specified in the individual U300 or U400 Series Design in the UL Fire Resistance Directory. Max diam of opening is 4 in.
   C. The hourly F Rating of the firestop system is 1 hr when installed in a 1 hr fire rated wall and 2 hr when installed in a 2 hr fire rated wall.
2. Steel Sleeve – Cylindrical sleeve fabricated from min 0.019 in. thick (28 gauge) galv sheet steel and having a min 2 in. lap along the longitudinal seam. Length of steel sleeve to be equal to thickness of wall plus approx 7/8 to 1 in. such that, when installed, the ends of the sleeve will project approx 7/16 to 1/2 in. beyond the surface of the wall on each side of the wall assembly. Sleeve installed by coiling the sheet steel to a diam smaller than the max 4 in. diam through openings, inserting the coil through the openings and releasing the coil to let it uncoil against the circular cutouts in the gypsum wallboard layers.
3. Cables – Aggregate cross-sectional area of cables in opening to be min 10 percent to max 40 percent of the cross-sectional area of the sleeved opening in wall. Cables to be rigidly supported on both sides of wall assembly. Any combination of the following types and sizes of cable may be used:
   A. Max 150 pair No. 24 AWG copper conductor telecommunication cables; PVC insulation and jacket materials. When multi conductor telecommunication cable is used, T Rating is 1/2 hr.
   B. Max 12 AWG multi conductor Type TC copper power and control cables; Type XHHW conductors (XLP insulation) with XLP or PVC jacket. When max 12 AWG multi conductor cables are used, T Rating is 1 hr.
   C. Multiple fiber optical communication cable jacketed with PVC and having a max outside diam of 5/8 in. When fiber optic cable is used, T Rating is 1–1/2 hr.
4. Fill, Void or Cavity Materials* – Putty – Min 1 in. thickness of moldable putty packed tightly into annular space between cables and sheet steel sleeve (and interstices between cables, if possible), flush with each end of steel sleeve. A nom 1/4 in. diam continuous "rope" or putty shall be applied around the circumference of the steel sleeve at its egress from the gypsum wallboard layers on both sides of the wall assembly.

MINNESOTA MINING & MFG CO – Type MPS–2+, Cable Wrap Putty
*Bearing the UL Classification Mark

System No.W-L-1003
September 03, 2004
(Formerly System No. 147)
F Ratings - 1 and 2 Hr (See Item 1)
T Rating - 0 Hr

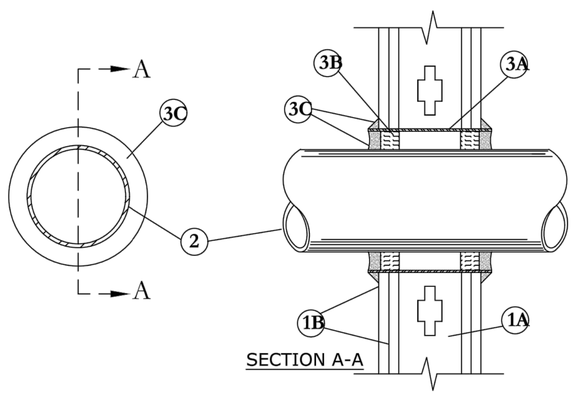

1. Wall Assembly – The 1 or 2 hr fire-rated gypsum wallboard/stud wall assembly shall be constructed of the materials and in the manner described in the individual U300 or U400 Series Wall or Partition Design in the UL Fire Resistance Directory and shall include the following construction features:
   A. Studs – Wall framing may consist of either wood studs or steel channel studs. Wood studs to consist of nom 2 by 4 in. lumber spaced 16 in. OC with nom 2 by 4 in. lumber end plates and cross braces. Steel studs to be min 3–1/2 in. wide by 1–3/8 in. deep channels spaced max 24 in. OC.
   B. Gypsum Board* – Nom 5/8 in. thick, 4 ft. wide with square or tapered edges. The gypsum wallboard type, thickness, number of layers, fastener type and sheet orientation shall be as specified in the individual U300 or U400 Series Design in the UL Fire Resistance Directory. Max diam of opening is 15 in
   C. The hourly F Rating of the firestop system is equal to the hourly fire rating of the wall assembly in which it is installed.
2. Through Penetrant – One metallic pipe, conduit or tubing to be installed either concentrically or eccentrically within the firestop system. The space between pipes, conduits or tubing and the steel sleeve (Item 3A) shall be min of 0 in. (point contact) to max 2–3/8 in. Pipe, conduit or tubing to be rigidly supported on both sides of wall assembly. The following types and sizes of metallic pipes, conduits or tubing may be used:
   A. Steel Pipe – Nom 12 in. diam (or smaller) Schedule 10 (or heavier) steel pipe.
   B. Iron Pipe – Nom 12 in. diam (or smaller) service weight (or heavier) cast iron soil pipe, nom 12 in. diam (or smaller) or Class 50 (or heavier) ductile iron pressure pipe.
   C. Conduit – Nom 6 in. diam (or smaller) steel conduit or nom 4 in. diam (or smaller) steel electrical metallic tubing.
   D. Copper Tubing – Nom 6 in. diam (or smaller) Type L (or heavier) copper tubing.
   E. Copper Pipe – Nom 6 in. diam (or smaller) Regular (or heavier) copper pipe.
3. Firestop System – Installed symmetrically on both sides of wall assembly. The details of the firestop system shall be as follows.
   A. Steel Sleeve – Cylindrical sleeve fabricated from min 0.019 in. thick (No. 28 gauge) galv sheet steel and having a min 2 in. lap along the longitudinal seam. Length of steel sleeve to be equal to thickness of wall plus 1 to 4 in. such that, when installed, the ends of the sleeve will project approximately 1/2 to 2 in. beyond the surface of the wall on both sides of the wall assembly. Sleeve installed by coiling the sheet steel to a diam smaller than the through opening, inserting the coil through the openings and releasing the coil to let it uncoil against the circular cutouts in the gypsum wallboard layers.
   B. Packing Material – Min 1 in. thickness of mineral wool batt insulation firmly packed into steel sleeve on both sides of the wall assembly as permanent forms. Packing material to be recessed min 1/2 in. from end of steel sleeve (flush with or recessed into gypsum wallboard surface) on both sides of wall assembly.
   B1. Packing Material – (Not shown) – As an alternate to Item B, nom 1 in. thick polyethylene backer rod may be used. The backer rod is to be recessed within the steel sleeve a min of 1 in. from each surface of wall.
   C. FILVoid or Cavity Materials* – Caulk or Sealant – When mineral wool batt insulation is used, applied to fill the steel sleeve to a min depth of 1/2 in. on both sides of wall assembly. When backer rod is used, a min thickness of 1 in. of CP–25WB+ caulk is required flush with surface of wall. A nom 1/4 in. diam continuous bead of caulk or sealant shall be applied around the circumference of the steel sleeve at its egress from the gypsum wallboard layers on both sides of the wall assembly.

3M COMPANY – CP 25WB+ caulk or FB–3000 WT sealant.
*Bearing the UL Classification Marking

PENETRATION FIRESTOP FOR 12" MAX. DIA. METAL PIPE/CONDUIT THROUGH GYPSUM WALLBOARD ASSEMBLY
N.T.S. UL SYSTEM #147A (1 OR 2 HOUR RATING)

PENETRATION FIRESTOP FOR A MAX. 4" DIA. INSULATED CABLE THROUGH A SLEEVED OPENING IN A GYPSUM WALLBOARD ASSEMBLY
UL SYSTEM #589 (1 AND 2 HOUR RATING)

NOTES FOR FIRE STOPPING DETAILS (NEC & UL)

1) FIRE STOPPING DETAILS ARE SHOWN FOR GENERAL INTENT. PROVIDE FIRE STOPPING ASSEMBLY SUITABLE FOR THE APPLICATION IN COMPLIANCE WITH FLORIDA BUILDING CODE AND U.L.

2) DETAILS ARE BASED ON 3M PRODUCTS AND THEIR RECOMMENDED USAGE/ DETAILS. SUBSTITUTED PRODUCTS SHALL BE SUBMITTED AS OUTLINED IN SPECIFICATIONS. U.L. FIRE STOPPING ASSEMBLY DETAILS SHALL BE INCLUDED WITH PRODUCT DATA FOR REVIEW PRIOR TO INSTALLATION.

HALL & OGLE ARCHITECTS, INC.
208 MAGNOLIA AVENUE
DAYTONA BEACH, FLORIDA 32114
www.hoarchitects.com
PH:(386) 255-6163
FAX:(386)257-5650
AA-C000925

SEAL

REVISIONS

NO.	DATE	DESCRIPTION

Replacement Fire Station # 96
City of Holly Hill, Fl.
1020 Daytona Avenue
Holly Hill , Florida

ARCH/ENGR OF RECORD
JOHN E. HALL AR0010727
DAVID D. OGLE AR93986

DESIGNED BY	DRAWN BY
JEH	SC/ JH
ISSUE DATE	AE PROJECT NUMBER
18-MAY-2023	2204

SHEET TITLE
UL FIRE RATED PENETRATIONS

DRAWING NO.
A4.3

Attachment: Exhibit C - Fire Station #96 Bid Set (2023-R-55 : Fire Station Construction)

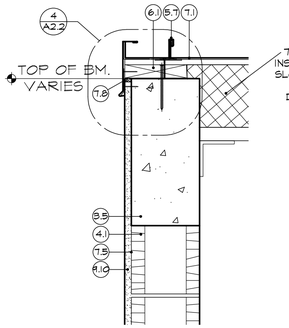

A A5.0 DETAIL
SCALE: 1 1/2" = 1'-0"

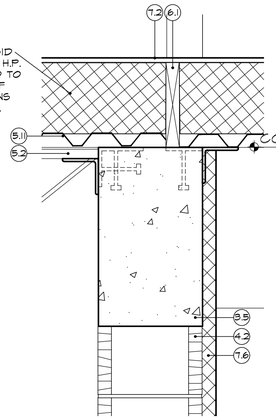

B A5.0 DETAIL
SCALE: 1 1/2" = 1'-0"

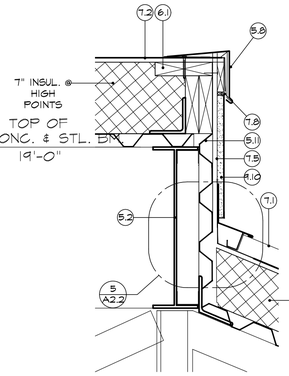

C A5.0 DETAIL
SCALE: 1 1/2" = 1'-0"

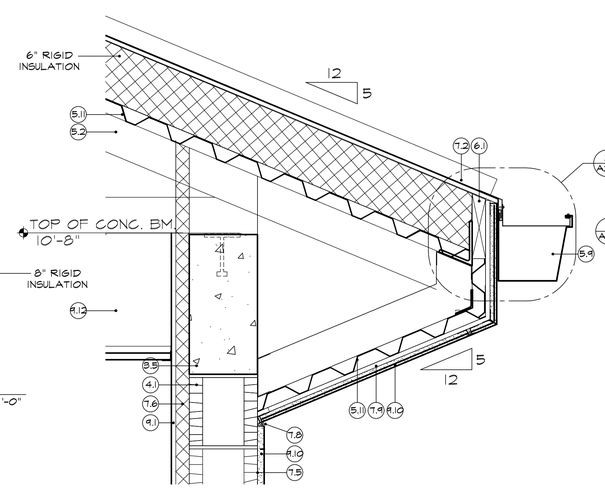

E A5.0 DETAIL
SCALE: 1 1/2" = 1'-0"

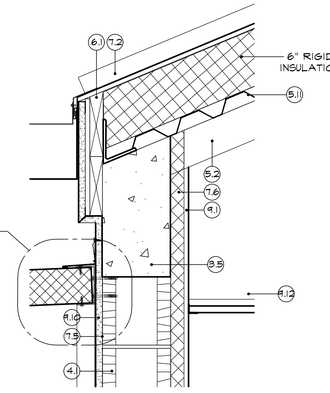

F A5.0 DETAIL
SCALE: 1 1/2" = 1'-0"

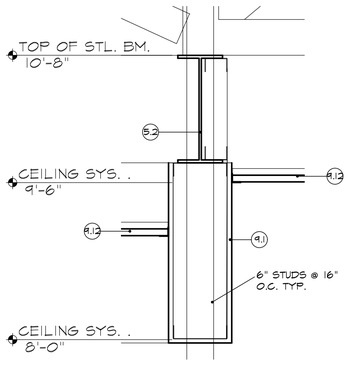

D A5.0 DETAIL
SCALE: 1 1/2" = 1'-0"

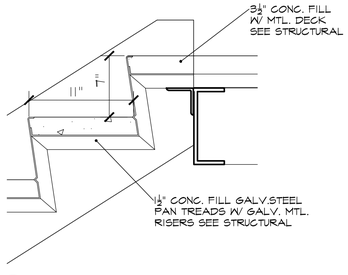

G A4.1 DETAIL
SCALE: 1 1/2" = 1'-0"

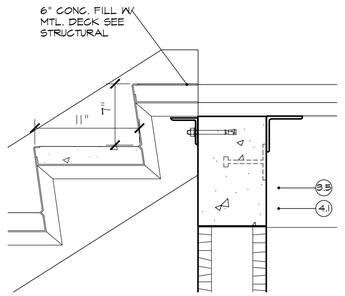

H A4.1 DETAIL
SCALE: 1 1/2" = 1'-0"

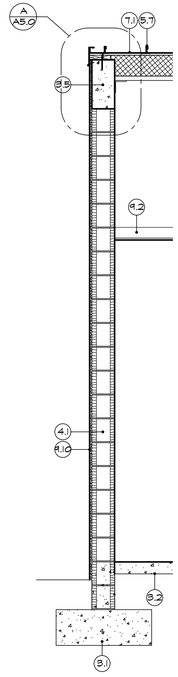

1 A5.0 WALL SECTION
SCALE: 1/2" = 1'-0"

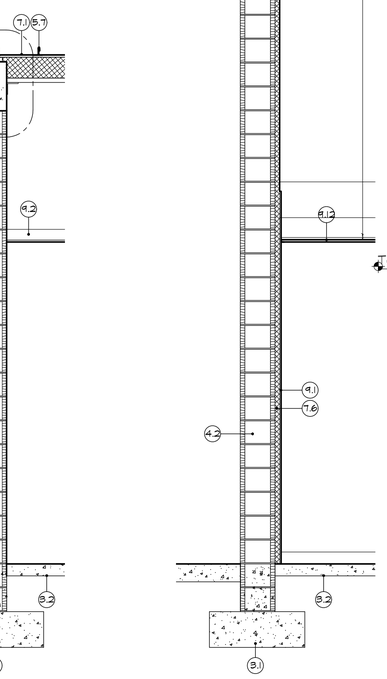

2 A5.0 WALL SECTION
SCALE: 1/2" = 1'-0"

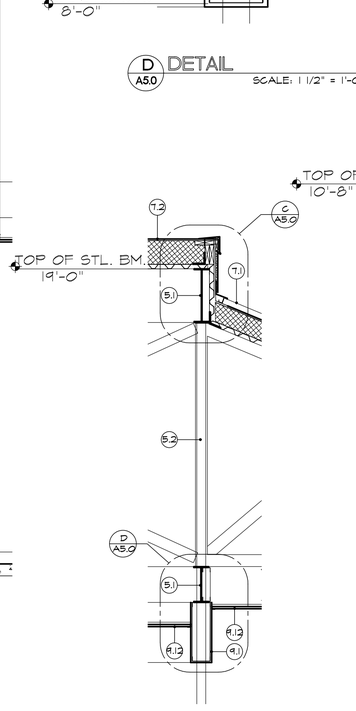

3 A5.0 WALL SECTION
SCALE: 1/2" = 1'-0"

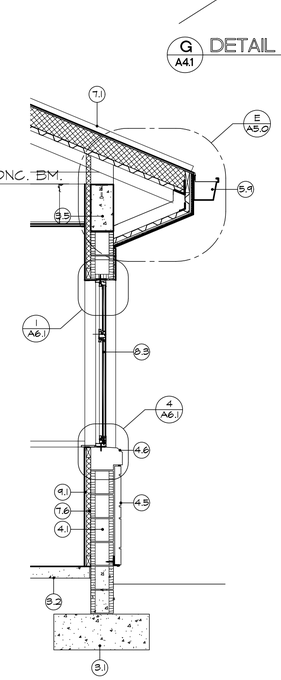

4 A5.0 WALL SECTION
SCALE: 1/2" = 1'-0"

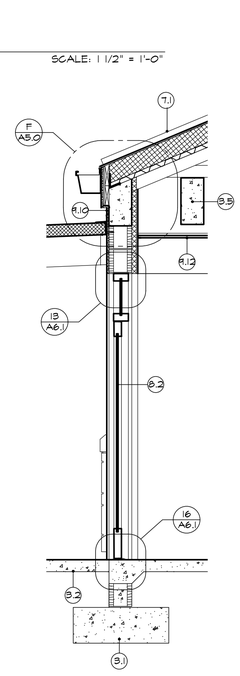

5 A5.0 WALL SECTION
SCALE: 1/2" = 1'-0"

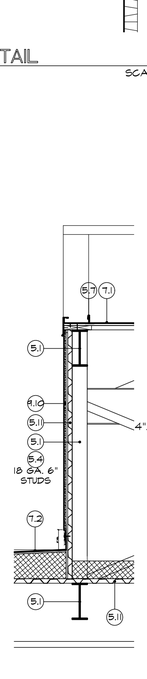

6 A5.0 WALL SECTION
SCALE: 1/2" = 1'-0"

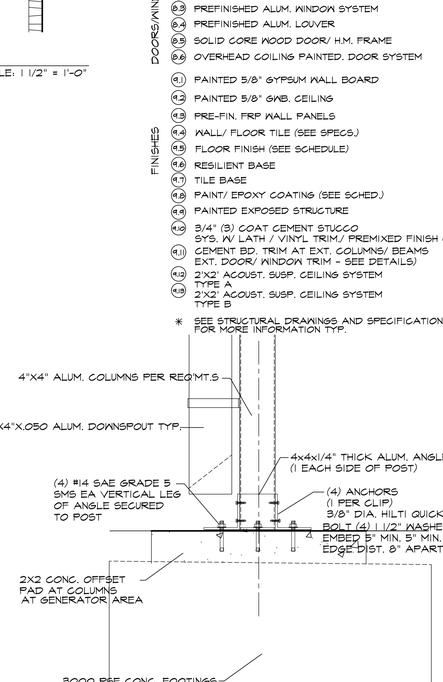

G A5.0 DETAIL PORCH COLUMN
SCALE: 1 1/2" = 1'-0"

MATERIAL KEY

CONCRETE
- 5.1 REINFORCED CONCRETE FOOTING (SEE STRUCTURAL)
- 5.2 REINF. CONC. SLAB (SEE STRUCTURAL)
- 5.3 EXPANSION JOINT MATERIAL W/ SEALANT JT.
- 5.4 REINF. 10 MILL VAPOR BARRIER OVER TREATED / COMPACTED FILL
- 5.5 REINF. POURED CONC. COLUMN / BEAM (SEE STRUCT.)

VERT. CONC. WALLS
- 4.1 REINF.'D 8"x8"x16" CONC. MASONRY W/ HORIZ. JT. REINF @ 16" OC./ REINF./ CONC. FILLED CELLS
- 4.2 REINF.'D 12"x8"x16" CONC. MASONRY W/ HORIZ. JT. REINF @ 16" OC./ REINF./ CONC. FILLED CELLS
- 4.3 REINF./ CONCRETE CAST BEAM/ COLUMN
- 4.4 REINF./ CONC. FILLED PRECAST CONC. LINTEL
- 4.5 PRECAST CONC./ COQUINA SHELL PANELS.
- 4.6 PRECAST CONC. SILL/ WALL CAP.
- 4.7 MASONRY REINF. CONC. FILLED CELLS

METALS
- 5.1 STEEL COLUMN/ BEAM (SEE STRUCT.)
- 5.2 MISC. STEEL, ROOF FRAMING (SEE STRUCT.) LT. GA. TRUSSES OR STL. JOISTS
- 5.4 4" OR 6" 20 GA. MTL. STUDS @ 16" O.C. SEE WALL TYPE SCHEDULE
- 5.5 CONT. STUD TRACK ANCHOR TO DECK/ SLAB
- 5.6 1 1/2" 20 GA. MTL. ZEE FURRING CHANNELS
- 5.7 PRE-FIN. .032 ALUM. SNAP LOCK ROOFING PANELS
- 5.8 PRE-FIN. .032 ALUM. FLASHING / TRIM PRE-FIN. .040 ALUM. EDGE/ COPING CAP TRIM
- 5.9 PRE-FIN. 0.040 ALUM. GUTTERS & DOWN SPOUTS
- 5.10 BV. CHAIN LINK GUARD RAIL SYSTEM, SEE DETAILS
- 5.11 1 1/2" MTL. DECKING/ IMPACT ENCLOSURE
- 5.12 6 & 8" CAST ALUM. SIGNAGE W/ HIDDEN FASTNERS

WOOD
- 6.1 MISC. WOOD ROOF BLOCKING (SEE STRUCT.)
- 6.2 MISC./ CONT. PT. 2X NAILERS/ BLOCKING
- 6.3 WOOD TRIM

THERM./ MOIST. PROT.
- 7.1 **MAIN ROOF SYSTEM :** 1 1/2" STL. DECKING W/ TAPERED 6" MIN. RIGID INSUL. R-30 AVER. ½" MINERAL BOARD SUBSTRATE PEEL AND STICK MEMBRANE .032 ALUM. SNAP LOCK ROOFING PANELS
- 7.2 **SECONDARY ROOF SYSTEM :** ROOF DECKING W/ BASE SHT. SLOPING/ RIGID INSUL. R-30 AVG. ½" MINERAL BOARD SUBSTRATE LOW SLOPE MOD. BIT. MEMBRANE ROOFING SYS.
- 7.3 PRE-ENG. 4" THK. SIPS ROOF SYSTEM
- 7.4 PRE-ENG. 4" THK. CANTILEVER AWNINGS W/ ANGLE BRACES BACK TO WALL
- 7.5 AIR/ VAPOR/ MOISTURE MEMB. SYS.
- 7.6 RIGID WALL INSULATION - 1½" THICK (TYP)
- 7.7 4" OR 6" BATT INSULATION
- 7.8 JOINT SEALANT W/ BACKER ROD CONT.
- 7.9 1/2" EXT. SHEATHING BOARD
- 7.10 SPRAY FOAM CLOSURE (SEAL ALL OPENINGS)

DOORS/WINDOWS
- 8.1 PREFIN. ALUM VINYL SCREEN ENCLOSURE SYS
- 8.2 PREFINISHED ALUM. / GLASS DOOR / FRAMES
- 8.3 PREFINISHED ALUM. WINDOW SYSTEM
- 8.4 PREFINISHED ALUM. LOUVER
- 8.5 SOLID CORE WOOD DOOR/ H.M. FRAME
- 8.6 OVERHEAD COILING PAINTED. DOOR SYSTEM

FINISHES
- 9.1 PAINTED 5/8" GYPSUM WALL BOARD
- 9.2 PAINTED 5/8" GWB. CEILING
- 9.3 PRE-FIN. FRP WALL PANELS
- 9.4 WALL/ FLOOR TILE (SEE SPECS.)
- 9.5 FLOOR FINISH (SEE SCHEDULE)
- 9.6 RESILIENT BASE
- 9.7 TILE BASE
- 9.8 PAINT/ EPOXY COATING (SEE SCHED.)
- 9.9 PAINTED EXPOSED STRUCTURE
- 9.10 3/4" (3) COAT CEMENT STUCCO SYS. W/ LATH / VINYL TRIM./ PREMIXED FINISH COAT
- 9.11 CEMENT BD. TRIM AT EXT. COLUMNS/ BEAMS EXT. DOOR/ WINDOW TRIM - SEE DETAILS)
- 9.12 2'X2' ACOUST. SUSP. CEILING SYSTEM TYPE A
- 9.13 2'X2' ACOUST. SUSP. CEILING SYSTEM TYPE B

* SEE STRUCTURAL DRAWINGS AND SPECIFICATIONS FOR MORE INFORMATION TYP.

HALL & OGLE ARCHITECTS, INC.
208 MAGNOLIA AVENUE
DAYTONA BEACH, FLORIDA 32114
PH:(386) 255-6163
FAX:(386)257-5650
AA-C000925
www.hoarchitects.com

SEAL

REVISIONS

NO.	DATE	DESCRIPTION

Replacement Fire Station # 96
City of Holly Hill, Fl.
1020 Daytona Avenue
Holly Hill , Florida

ARCHITECT OF RECORD
JOHN E. HALL AR0010727
DAVID D. OGLE AR93986

DESIGNED BY	DRAWN BY
JEH	SC/ JH
ISSUE DATE	AE PROJECT NUMBER
18-MAY-2023	2204

SHEET TITLE
WALL SECTIONS

DRAWING NO.
A5.0

Attachment: Exhibit C - Fire Station #96 Bid Set (2023-R-55 : Fire Station Construction)

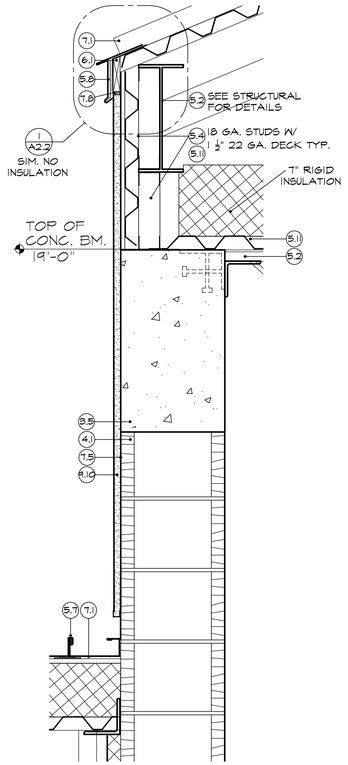

A A5.1 DETAIL
SCALE: 1 1/2" = 1'-0"

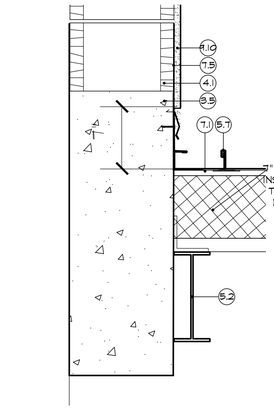

B A5.1 DETAIL
SCALE: 1 1/2" = 1'-0"

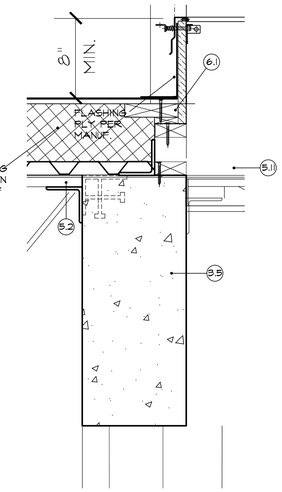

C A5.1 DETAIL
SCALE: 1 1/2" = 1'-0"

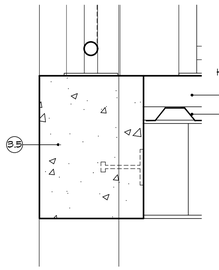

D A5.1 DETAIL
SCALE: 1 1/2" = 1'-0"

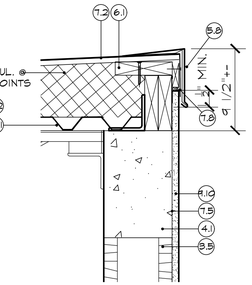

E A5.1 DETAIL
SCALE: 1 1/2" = 1'-0"

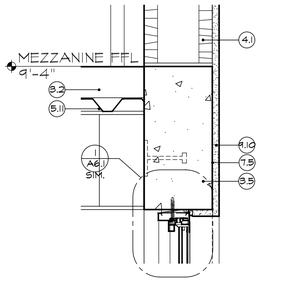

F A5.1 DETAIL
SCALE: 1 1/2" = 1'-0"

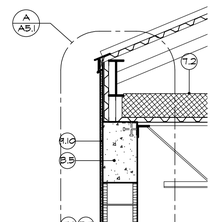

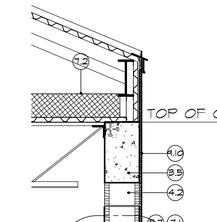

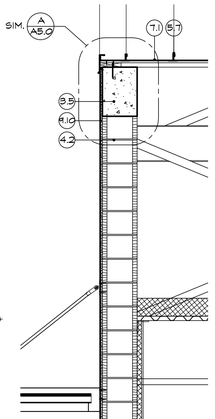

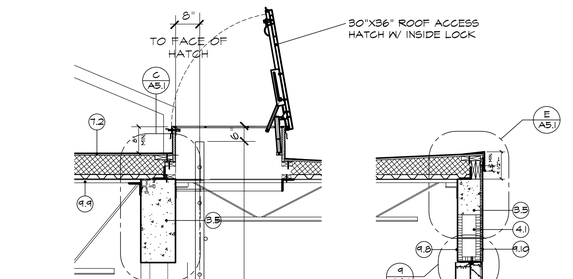

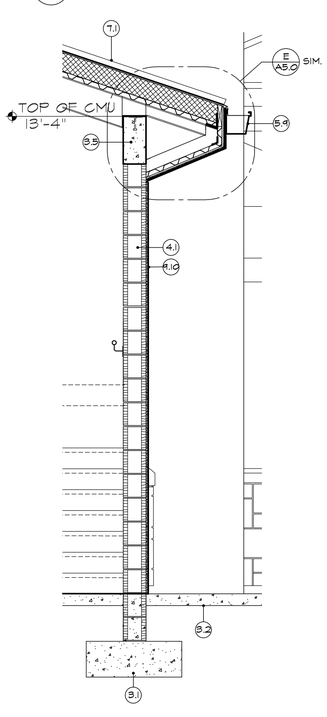

1 A5.1 WALL SECTION
SCALE: 1/2" = 1'-0"

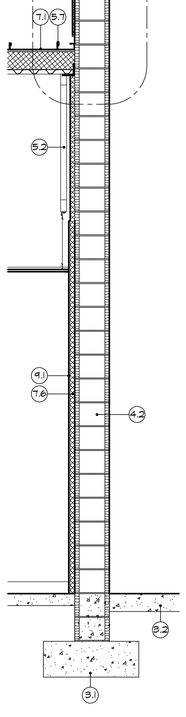

2 A5.1 WALL SECTION
SCALE: 1/2" = 1'-0"

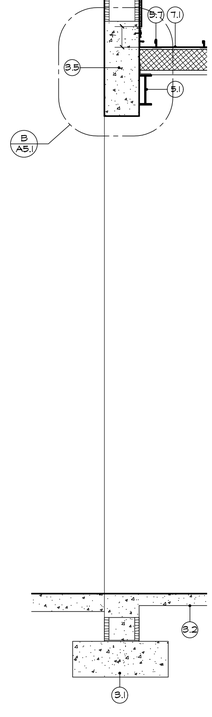

3 A5.1 WALL SECTION
SCALE: 1/2" = 1'-0"

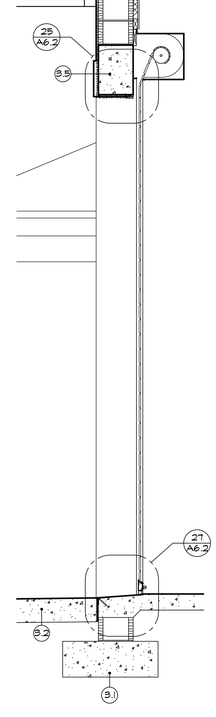

4 A5.1 WALL SECTION
SCALE: 1/2" = 1'-0"

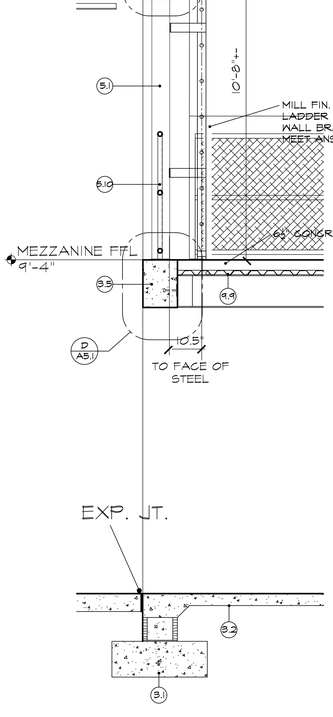

5 A5.1 WALL SECTION
SCALE: 1/2" = 1'-0"

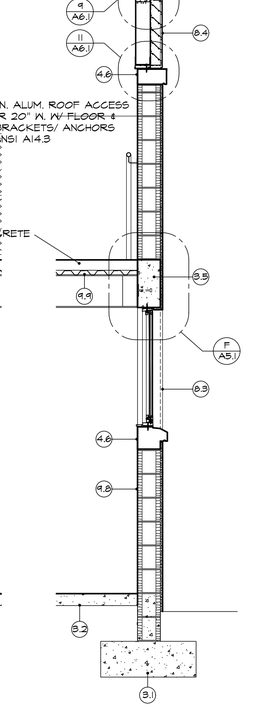

6 A5.1 WALL SECTION
SCALE: 1/2" = 1'-0"

MATERIAL KEY

CONCRETE
- 3.1 REINFORCED CONCRETE FOOTING (SEE STRUCTURAL)
- 3.2 REINF. CONC. SLAB (SEE STRUCTURAL)
- 3.3 EXPANSION JOINT MATERIAL W/ SEALANT JT.
- 3.4 REINF. 10 MILL VAPOR BARRIER OVER TREATED / COMPACTED FILL
- 3.5 REINF. POURED CONC. COLUMN / BEAM (SEE STRUCT.)

VERT. CONC. WALLS
- 4.1 REINF.'D 8"x8"x16" CONC. MASONRY W/ HORIZ. JT. REINF @ 16" OC./ REINF./ CONC. FILLED CELLS
- 4.2 REINF.'D 12"x8"x16" CONC. MASONRY W/ HORIZ. JT. REINF @ 16" OC./ REINF./ CONC. FILLED CELLS
- 4.3 REINF./ CONCRETE CAST BEAM/ COLUMN
- 4.4 REINF./ CONC. FILLED PRECAST CONC. LINTEL
- 4.5 PRECAST CONC./ COQUINA SHELL PANELS.
- 4.6 PRECAST CONC. SILL/ WALL CAP.
- 4.7 MASONRY REINF. CONC. FILLED CELLS

METALS
- 5.1 STEEL COLUMN/ BEAM (SEE STRUCT'L.)
- 5.2 MISC. STEEL ROOF FRAMING (SEE STRUCT.) LT. GA. TRUSSES OR STL. JOISTS
- 5.4 4" OR 6" 20 GA. MTL. STUDS @ 16" O.C. SEE WALL TYPE SCHEDULE
- 5.5 CONT. STUD TRACK ANCHOR TO DECK/ SLAB
- 5.6 1 1/2" 20 GA. MTL. ZEE FURRING CHANNELS
- 5.7 PRE-FIN. .032 ALUM. SNAP LOCK ROOFING PANELS
- 5.8 PRE-FIN. .032 ALUM. FLASHING / TRIM PRE-FIN. .040 ALUM. EDGE/ COPING CAP TRIM
- 5.9 PRE-FIN. 0.040 ALUM. GUTTERS & DOWN SPOUTS
- 5.10 BV. CHAIN LINK GUARD RAIL SYSTEM, SEE DETAILS
- 5.11 1 1/2" MTL. DECKING/ IMPACT ENCLOSURE
- 5.12 6 & 8" CAST ALUM. SIGNAGE W/ HIDDEN FASTNERS

WOOD
- 6.1 MISC. WOOD ROOF BLOCKING (SEE STRUCT.)
- 6.2 MISC./ CONT. PT. 2X NAILERS/ BLOCKING
- 6.3 WOOD TRIM

THERM./ MOIST. PROT.
- 7.1 **MAIN ROOF SYSTEM :** 1 1/2" STL. DECKING W/ TAPERED 6" MIN. RIGID INSUL. R-30 AVER. ½" MINERAL BOARD SUBSTRATE PEEL AND STICK MEMBRANE .032 ALUM. SNAP LOCK ROOFING PANELS
- 7.2 **SECONDARY ROOF SYSTEM :** ROOF DECKING W/ BASE SHT. SLOPING/ RIGID INSUL. R-30 AVG. ½" MINERAL BOARD SUBSTRATE LOW SLOPE MOD. BIT. MEMBRANE ROOFING SYS.
- 7.3 PRE-ENG. 4" THK. SIPS ROOF SYSTEM
- 7.4 PRE-ENG. 4" THK. CANTILEVER AWNINGS W/ ANGLE BRACES BACK TO WALL
- 7.5 AIR/ VAPOR/ MOISTURE MEMB. SYS.
- 7.6 RIGID WALL INSULATION - 1½" THICK (TYP)
- 7.7 4" OR 6" BATT INSULATION
- 7.8 JOINT SEALANT W/ BACKER ROD CONT.
- 7.9 1/2" EXT. SHEATHING BOARD
- 7.10 SPRAY FOAM CLOSURE (SEAL ALL OPENINGS)

DOORS/WINDOWS
- 8.1 PREFIN. ALUM VINYL SCREEN ENCLOSURE SYS
- 8.2 PREFINISHED ALUM. / GLASS DOOR / FRAMES
- 8.3 PREFINISHED ALUM. WINDOW SYSTEM
- 8.4 PREFINISHED ALUM. LOUVER
- 8.5 SOLID CORE WOOD DOOR/ H.M. FRAME
- 8.6 OVERHEAD COILING PAINTED. DOOR SYSTEM

FINISHES
- 9.1 PAINTED 5/8" GYPSUM WALL BOARD
- 9.2 PAINTED 5/8" GWB. CEILING
- 9.3 PRE-FIN. FRP WALL PANELS
- 9.4 WALL/ FLOOR TILE (SEE SPECS.)
- 9.5 FLOOR FINISH (SEE SCHEDULE)
- 9.6 RESILIENT BASE
- 9.7 TILE BASE
- 9.8 PAINT/ EPOXY COATING (SEE SCHED.)
- 9.9 PAINTED EXPOSED STRUCTURE
- 9.10 3/4" (3) COAT CEMENT STUCCO SYS. W/ LATH / VINYL TRIM./ PREMIXED FINISH COAT
- 9.11 CEMENT BD. TRIM AT EXT. COLUMNS/ BEAMS EXT. DOOR/ WINDOW TRIM - SEE DETAILS)
- 9.12 2'X2' ACOUST. SUSP. CEILING SYSTEM TYPE A
- 9.13 2'X2' ACOUST. SUSP. CEILING SYSTEM TYPE B

✳ SEE STRUCTURAL DRAWINGS AND SPECIFICATIONS FOR MORE INFORMATION TYP.

HALL & OGLE ARCHITECTS, INC.
208 MAGNOLIA AVENUE
DAYTONA BEACH, FLORIDA 32114
www.hoarchitects.com
PH:(386) 255-6163
FAX:(386)257-5650
AA-C000925

SEAL

REVISIONS

NO.	DATE	DESCRIPTION

DOCUMENT HISTORY

Replacement Fire Station # 96
City of Holly Hill, Fl.
1020 Daytona Avenue
Holly Hill , Florida

ARCH/ENGR OF RECORD
JOHN E. HALL AR0010727
DAVID D. OGLE AR93986

DESIGNED BY	DRAWN BY
JEH	SC/ JH
ISSUE DATE	AE PROJECT NUMBER
18-MAY-2023	2204

SHEET TITLE
WALL SECTIONS

DRAWING NO.
A5.1

Attachment: Exhibit C - Fire Station #96 Bid Set (2023-R-55 : Fire Station Construction)

ROOM FINISH SCHEDULE

ROOM NUMBER	ROOM DESCRIPTIONS	FLOOR MATERIAL							BASE MATERIAL							WALL MATERIAL							CEILING MATERIAL							HEIGHT	REMARKS
		CARPET	CERAMIC TILE	LUXURY VINYL TILE FLOORING	EPOXY PAINT	FLUID APPLIED FLOORING	RUBBER	SPECIALTY EPOXY COATING	RESILIENT	CERAMIC TILE	EPOXY BASE					G.W.B. - EPOXY COATING	C.M.U. - EPOXY COATING	CERAMIC TILE	G.W.B. - PAINTED				G.W.B. (PAINTED)	G.W.B. - EXT. CEIL. BD. (PAINTED)	2 X 2 LAY-IN ACOUST. TILE	EXPOSED STURCT. PAINTED					
		1	2	3	4	5	6	7	1	2	3					1	2	3	4				1	2	3	4					
100	ENTRY			W	W														4					W	W					9'-0"	
101	RECEPTION			W	W														4					W	W					9'-0"	
102	CORRIDOR				4														4					W						9'-0"	6
103	STORAGE				4														4				1							8'-0"	
104	ELECTICAL				4														4					W						10'-0"	
105	DATA CLOSET				4														4				1							8'-0"	
106	CHIEF'S OFFICE			W															4					W						9'-6"	
107	H.C. TOILET		2							2						1		W					1							8'-0"	1, 3, 4
108	CUSTODIAL/ STORAGE				4														4				1							10'-0"	
109	LIVING AREA			W	W														4					W	W					9'-6"	
110	DINING			W	W														4					W	W					10'-0"	
111	KITCHEN			W	W														4					W	W					9'-0"	
112	(3) WORK STATIONS			W	W														4					W	W					9'-0"	
113	CORRIDOR				W														4					W						9'-0"	
114	WOMEN		2	2							2	2				1		W					1							8'-0"	1, 3, 4, 5
115	MEN		2								2	2				1		W					1							8'-0"	1, 3, 4, 5
116	CREW BUNK CORRIDOR			W	W														4					W	W					9'-0"	
117	LIEUTENANT'S OFFICE			W	W														4					W	W					9'-0"	
118	LIEUTENANT'S BUNK ROOM			W	W														4					W	W					9'-0"	
119	BUNK ROOM			W	W														4					W	W					9'-0"	
120	BUNK ROOM			W	W														4					W	W					9'-0"	
121	BUNK ROOM			W	W														4					W	W					9'-0"	
122	MECHANICAL				4														4						4					16'-0"	
123	CENTRAL UNIFORM STORAGE				4														4					W	W					9'-0"	
124	GEAR STORAGE				4														4					W	W					9'-0"	
125	APPARATUS							7								2									4					16'-0"	
126	STAIRS TO MEZZANINE STORAGE				4											2							2							16'-0"	
127	PHYSICAL TRAINING						6																		4					9'-0"	2
128	LAUNDRY					5					3					2							1							9'-0"	
129	EMS/ BIO. HAZARD					5					3					2							1							9'-0"	
130	MEZZANINE STORAGE				4											2									4					9'-0"	

NOTES

1. FULL HEIGHT WALL TILES AT FIXTURE WALLS
2. PHYSICAL TRAINING ROOM FLOORING AS SPECIFIED
3. PROVIDE SLIP RESISTANT NON-GLAZED FLOOR TILE.
4. MOISTURE RESISTANT G.W.B. IN RESTROOMS
5. CEMENTITIOUS BACKER-BOARD AT SHOWER WALLS
6. CERAMIC TILE FULL HT. AT DRINKING FOUNT. WET WALL 8' HT. G.W.B CEILING AT ALCOVE

DOOR SCHEDULE

DOOR NO.	DOOR TYPE	SIZES: WIDTH	SIZES: HEIGHT	SIZES: THICKNESS	MATERIAL: 1 SOLID CORE WOOD	2 S.C. WOOD/GLASS	3 HOLLOW METAL	4 H. MTL/GLASS	5 FIBERGLASS W/ GLASS	6 ALUM. W/ GLASS	FIRE RATED: 1 20 MIN. LABEL U.L.	2 3/4 HR. LABEL U.L.	3 1 1/2 HR. LABEL U.L.	GLASS: 1 1/4" TEMPERED GLASS	2 1/4" FIRE LITE GLASS	3 4/16" IMPACT RATED W/ F.P.A.	FRAME TYPE	MAT.DETAILS: 1 HOLLOW METAL	2 FIBERGLASS	3 ALUMINUM	HEAD	JAMB	SILL	FOR DOOR FRAME DETAILS SEE SHEET A7-1 - A7-2 - A7-3	HARDWARE SET NO.	REMARKS
1	E	3'-0"	7'-0"	1¾"						6						3	A			3	13	14	15	01	11	
2	A	3'-0"	7'-0"	1¾"	1												B				28	28	30	02	10	
3	A	3'-0"	7'-0"	1¾"	1							2					A				28	28	30	09	8	
4	C	2'-4"	7'-0"	1¾"			3										B				21	22	23	11		
5	B	3'-0"	7'-0"	1¾"		2										1	B				28	28	30	13		
6	A	3'-0"	7'-0"	1¾"	1												B				28	28	30	16	6	
7	A	3'-0"	7'-0"	1¾"	1												B				28	28	30	10		
8	B	3'-0"	7'-0"	1¾"		2										1	B				28	28	30	08		
9	NOT USED																									
10	A	3'-0"	7'-0"	1¾"	1												B				28	28	30	15	6	
11	A	3'-0"	7'-0"	1¾"	1												B				28	28	30	15	6	
12	B	3'-0"	7'-0"	1¾"		2										1	B				28	28	30	14		
13	NOT USED																									
14	B	2'-10"	7'-0"	1¾"		2										1	B				28	28	30	12		
15	B	2'-10"	7'-0"	1¾"		2										1	B				28	28	30	18		
16	A	2'-8"	7'-0"	1¾"	1												B				28	28	30	17		
17	A	2'-8"	7'-0"	1¾"	1												B				28	28	30	17		
18	A	2'-8"	7'-0"	1¾"	1												B				28	28	30	17		
19	NOT USED																									
20	E	3'-0"	7'-0"	1¾"						6						3	A			3	13	14	15	02	11	
21	D	3'-0"	7'-0"	1¾"				4				2			2		A				17	18	19	03	7, 9, 10	
22	C	3'-0"	7'-0"	1¾"	1							2					A				21	22	23	04	7	
23	C	3'-0"	7'-0"	1¾"			3					2					A				21	22	23	05	8	
24	D	3'-0"	7'-0"	1¾"				4				2					A				17	18	19	04	7, 10	
25	D	3'-0"	7'-0"	1¾"				4				2					A				17	18	19	07	7, 10	
26	D	3'-0"	7'-0"	1¾"				4				2					A				17	18	19	06	7, 10	
27	D	3'-0"	7'-0"	1¾"					5							3	A			3	17	18	19	02	11	
28	F	12'-11"	14'-0"														—		—		25	26	27	20	11	
29	F	12'-11"	14'-0"														—		—		25	26	27	20	11	
30	F	12'-11"	14'-0"														—		—		25	26	27	20	11	
31	F	12'-11"	14'-0"														—		—		25	26	27	20	11	

NOTES

1. FOR LOCATION OF DOORS SEE FLOOR PLAN.
2. FOR DOOR AND FRAME TYPES SEE ELEVATIONS THIS SHEET.
3. FOR DOOR HARDWARE SEE SCHEDULE AND SPECIFICATIONS.
4. FOR DOOR FRAME DETAILS SEE SHEETS A7-1 THRU A7-3
5. FOR DOOR INSTALLATION CONDITIONS SEE BUILDING TYP. WALL SECTIONS & SPECIFICATION.
6. 3/4" UNDERCUT DOOR REQUIRED - SEE MECHANICAL DWG'S.
7. U.L. RATED FRAME.
8. PROVIDE KNURLED SURFACE ON INSIDE FACE OF LEVER
9. PROVIDE HARDWARE TO ALLOW SWING OF 180
10. 3" WIDE NARROW GLASS (100 SQ. IN MAX.)
11. 9/16" GLASS SYS. IMPACT RATED W. F.P.A.

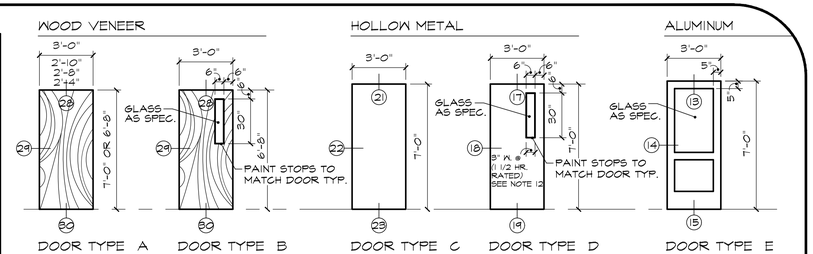

DOOR ELEVATIONS

SCALE: 1/4" = 1'-0"

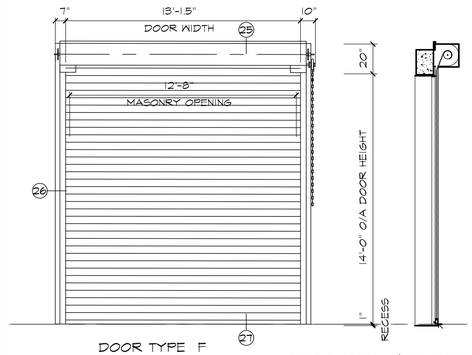

GARAGE DOOR ELEVATION

SCALE: 1/4" = 1'-0"

DOOR TYPE F (VIEW FROM INSIDE)

H.D. COILING SERVICE DOOR TYPE MODEL #620 OVERHEAD DOOR CORP. 13'-1.5"W x 14'-0"H O/A DOOR SIZE WITH ELECTRIC OPERATOR, BY OVERHEAD DOOR CORP. (OR APPROVED EQUAL) (SEE SPECIFICATION)

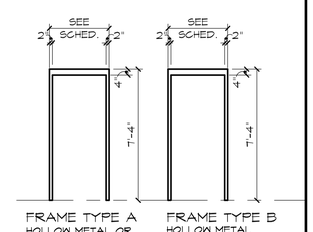

MASONRY WALLS INTERIOR STUD WALL

DOOR FRAME ELEVATIONS

SCALE: 1/4" = 1'-0"

NOTE: ALL NON RATED INTERIOR GLASS IN WINDOWS OR DOOR FRAMES IS TO BE 1/4" TEMPERED.

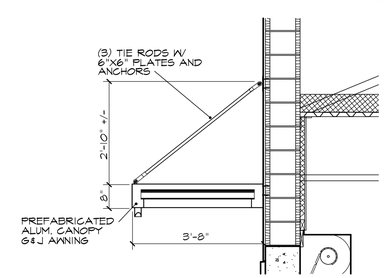

ALUM. CANOPY SECTION

ABOVE OVERHEAD DOORS SCALE: 1/2" = 1'-0"

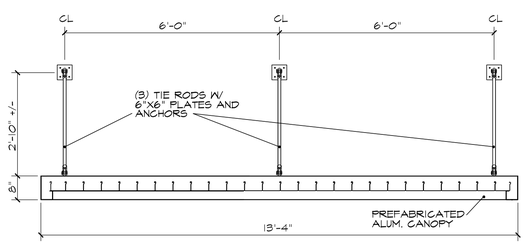

ALUM. CANOPY ELEVATION

ABOVE OVERHEAD DOORS SCALE: 1/2" = 1'-0"

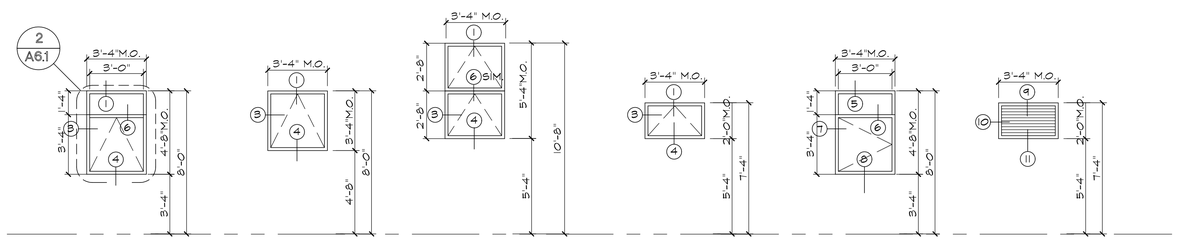

WINDOW ELEVATIONS

SCALE: 1/4" = 1'-0"

BUILDING CODE :

ALL NEW WINDOWS (AS INDICATED HEREIN) ARE TO BE IN FULL COMPLIANCE WITH THE FLORIDA BUILDING CODE (2020 EDITION) WITH RESPECT TO COASTAL WIND LOADINGS, IMPACT RESISTANCE, AND FRAME ATTACHMENT REQUIREMENTS.

HALL & OGLE ARCHITECTS, INC.
208 MAGNOLIA AVENUE
DAYTONA BEACH, FLORIDA 32114
www.hoarchitects.com
PH.(386) 255-6163
FAX.(386)257-5650
AA-C0009325

SEAL

REVISIONS

NO.	DATE	DESCRIPTION

DOCUMENT HISTORY

Replacement Fire Station # 96
City of Holly Hill, Fl.
1020 Daytona Avenue
Holly Hill , Florida

ARCHENGR OF RECORD
JOHN E. HALL AR0010727
DAVID D. OGLE AR93986

DESIGNED BY	DRAWN BY
JEH	SC/ JH
ISSUE DATE	AE PROJECT NUMBER
18-MAY-2023	2204

SHEET TITLE
ROOM FINISH SCHEDULE
DOOR SCHEDULE
WINDOW SCHEDULE

DRAWING NO.
A6.0

Attachment: Exhibit C - Fire Station #96 Bid Set (2023-R-55 : Fire Station Construction)

ALUM. WINDOW FRAME OPERABLE AWNING YKK YOW 225H

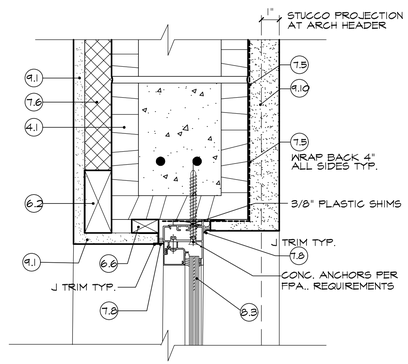

1 A6.1 WINDOW HEAD DETAIL — 3" = 1'-0"

ALUM. WINDOW FRAME OPERABLE EGRESS CASEMENT YKK YOW 225H

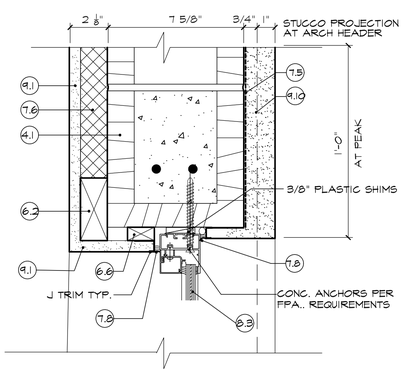

5 A6.1 WINDOW HEAD DETAIL — 3" = 1'-0"

ALUM. FIXED FRAME LOUVER GREENHECK EDS 435

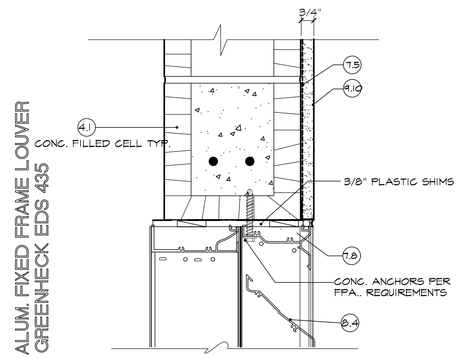

9 A6.1 LOUVER HEAD — 3" = 1'-0"

ALUM. ENTRY DOOR/ FRAME YKK MOD 35H IMPACT

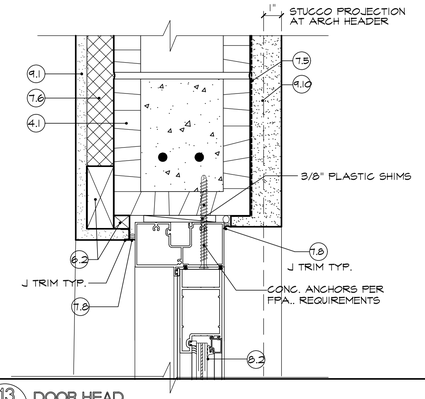

13 A6.1 DOOR HEAD — 3" = 1'-0"

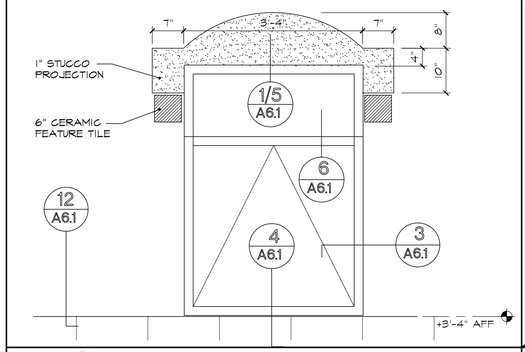

2 A6.1 WINDOW ELEVATION
STUCCO ACCENT HEAD TYP. — 3" = 1'-0"

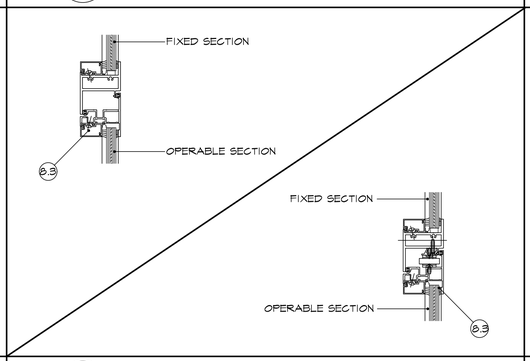

6 A6.1 WINDOW TRANSOME DETAILS — 3" = 1'-0"

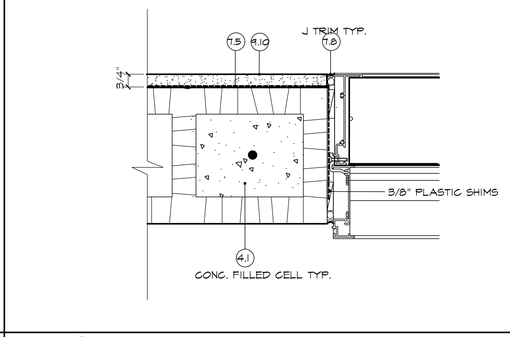

10 A6.1 LOUVER JAMB — 3" = 1'-0"

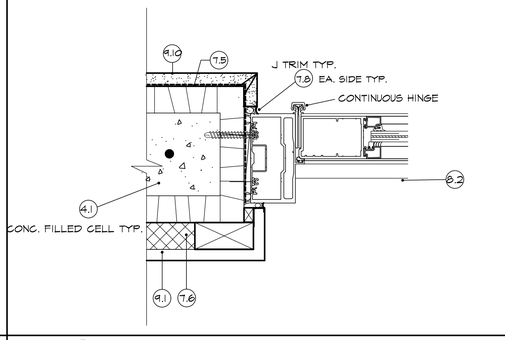

14 A6.1 DOOR JAMB DETAIL — 3" = 1'-0"

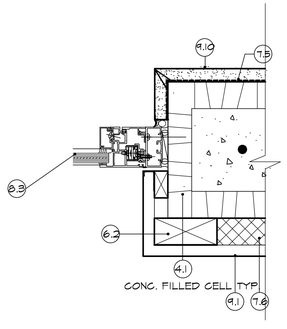

3 A6.1 WINDOW JAMB DETAIL
AT KITCHEN AND EGRESS WINDOW — 3" = 1'-0"

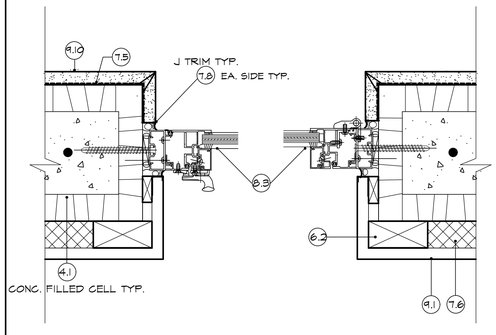

7 A6.1 WINDOW JAMBS DETAILS — 3" = 1'-0"

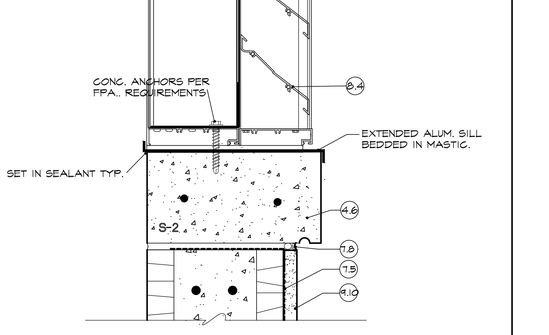

11 A6.1 LOUVER SILL — 3" = 1'-0"

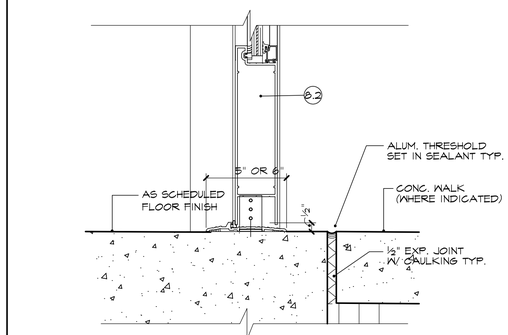

15 A6.1 DOOR SILL — 3" = 1'-0"

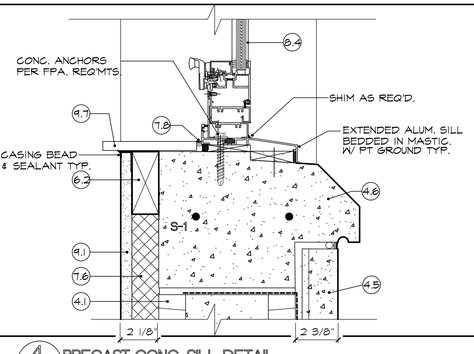

4 A6.1 PRECAST CONC. SILL DETAIL — 3" = 1'-0"

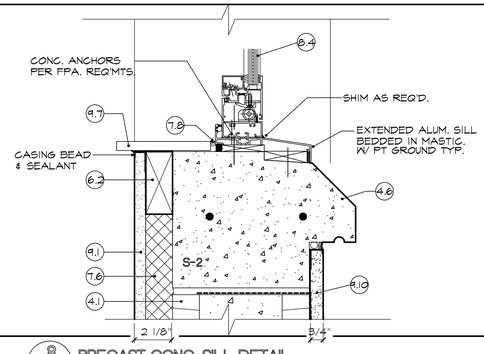

8 A6.1 PRECAST CONC. SILL DETAIL — 3" = 1'-0"

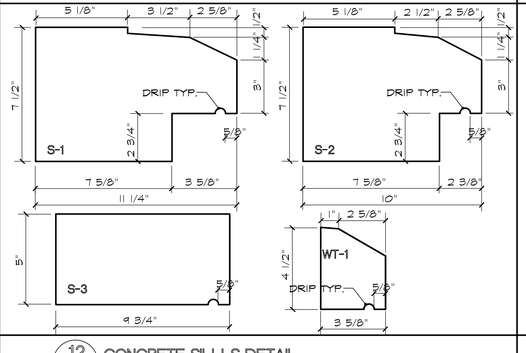

12 A6.1 CONCRETE SILLLS DETAIL
PRECAST WATER TABLE DETAIL — 3" = 1'-0"

16 A6.1 — 3" = 1'-0"

HALL & OGLE ARCHITECTS, INC.
208 MAGNOLIA AVENUE
DAYTONA BEACH, FLORIDA 32114
www.hoarchitects.com
PH.(386) 255-6163
FAX.(386)257-5650
AA-C000925

SEAL

REVISIONS

NO.	DATE	DESCRIPTION

Replacement Fire Station # 96
City of Holly Hill, Fl.
1020 Daytona Avenue
Holly Hill , Florida

ARCH/ENGR OF RECORD
JOHN E. HALL AR0010727
DAVID D. OGLE AR93986

DESIGNED BY	DRAWN BY
JEH	SC/ JH
ISSUE DATE	AE PROJECT NUMBER
18-MAY-2023	2204

SHEET TITLE
WINDOW & DOOR DETAILS

DRAWING NO.
A6.1

Attachment: Exhibit C - Fire Station #96 Bid Set (2023-R-55 : Fire Station Construction)

EXTERIOR HOLLOW METAL DOORS

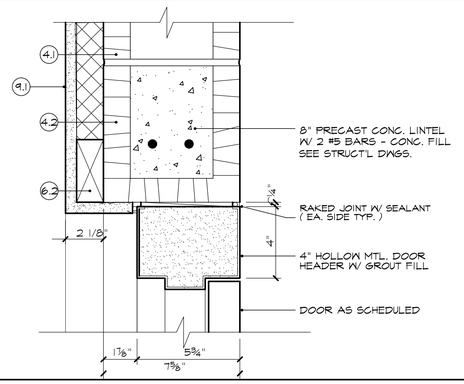

17 A6.2 EXTERIOR DOOR HEAD DETAIL 3" = 1'-0"

MASONRY HOLLOW METAL DOORS

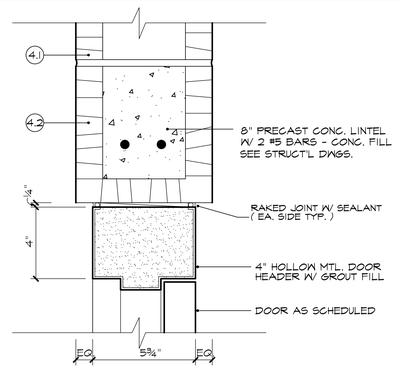

21 A6.2 MASONRY DOOR HEAD DETAIL 3" = 1'-0"

EXTERIOR OVERHEAD SECTIONAL DOORS

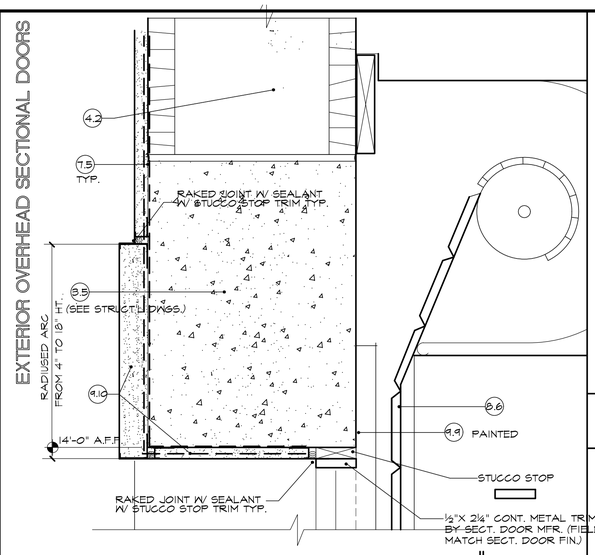

25 A6.2 HEAD DETAIL @ COILING DOORS SCALE: 3"= 1'-0"

INTERIOR HOLLOW METAL FRAMES WOOD OR HOLLOW METAL DOORS

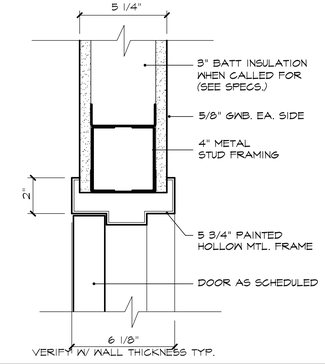

28 A6.2 INTERIOR DOOR HEAD DETAIL 3" = 1'-0"
NOTE: DOOR FRAMES ARE WIDER IN 6" STUD WALLS

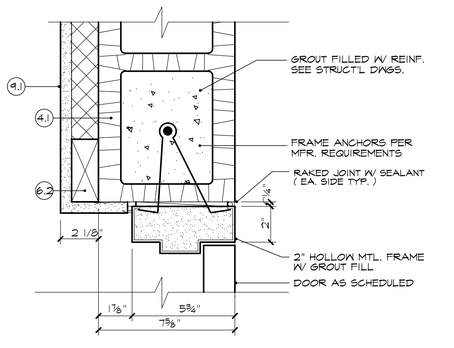

18 A6.2 EXTERIOR DOOR JAMB DETAIL 3" = 1'-0"

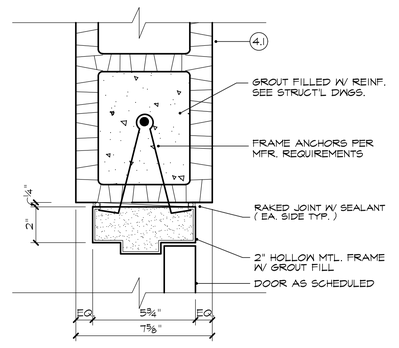

22 A6.2 MASONRY DOOR JAMB DETAIL 3" = 1'-0"

26 A6.2 JAMB DETAIL @ COILING DOORS SCALE: 3"= 1'-0"

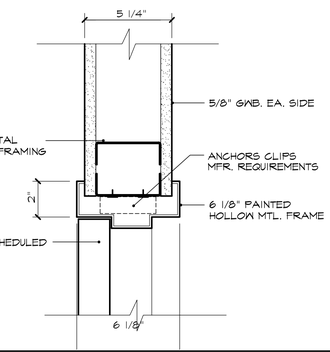

29 A6.2 INTERIOR DOOR JAMB DETAIL 3" = 1'-0"

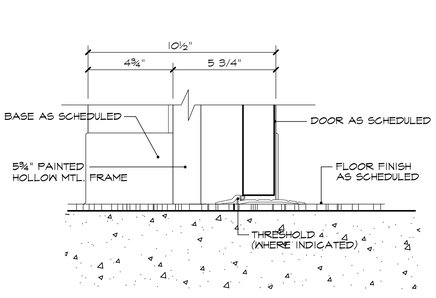

19 A6.2 EXTERIOR DOOR SILL DETAIL 3" = 1'-0"

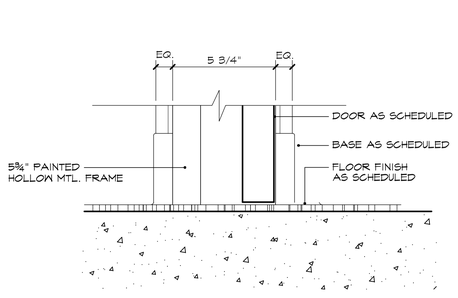

23 A6.2 MASONRY DOOR SILL DETAIL 3" = 1'-0"

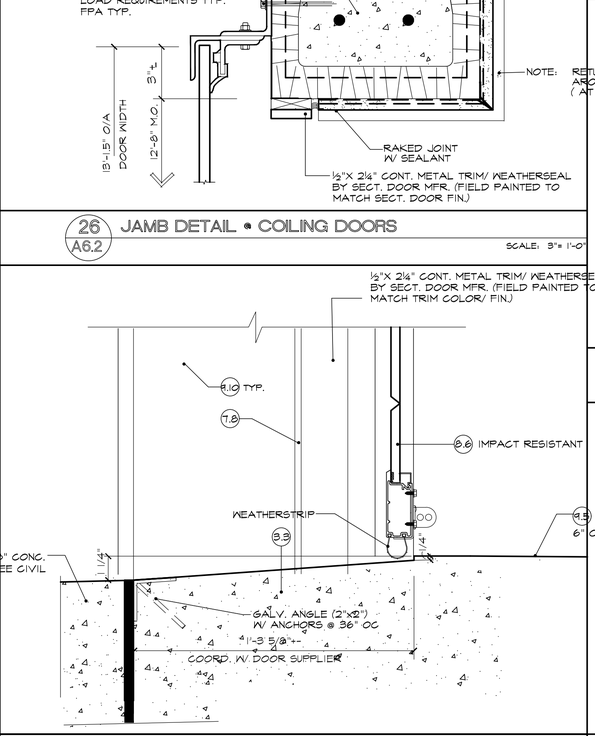

27 A6.2 SILL DETAIL @ COILING DOORS SCALE: 3"= 1'-0"

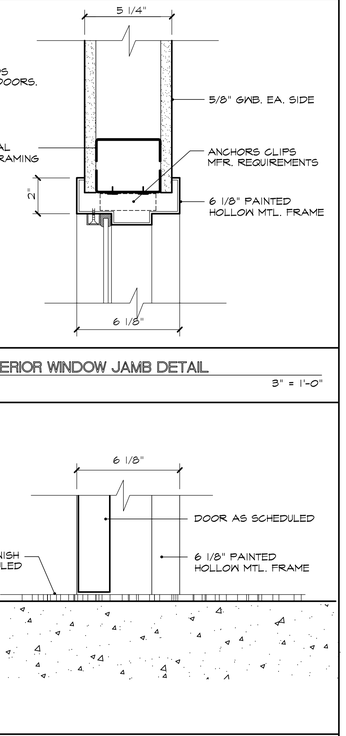

30 A6.2 INTERIOR WINDOW JAMB DETAIL 3" = 1'-0"

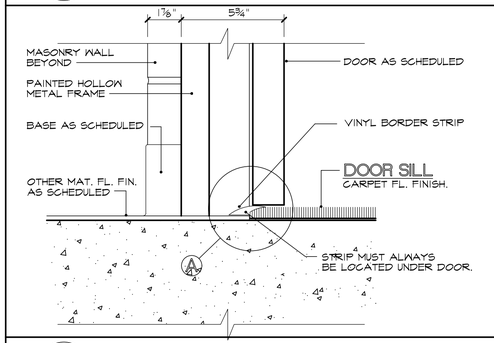

20 A6.2 INTERIOR WINDOW HEAD HOLLOW METAL (WINDOW # 38) 3" = 1'-0"

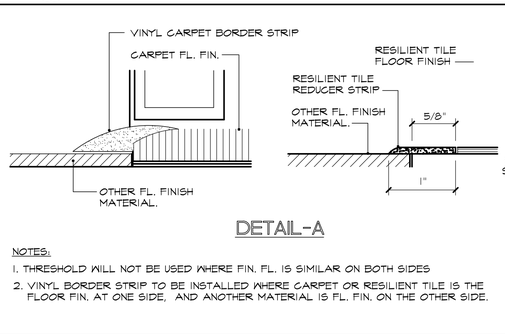

DETAIL-A

NOTES:
1. THRESHOLD WILL NOT BE USED WHERE FIN. FL. IS SIMILAR ON BOTH SIDES
2. VINYL BORDER STRIP TO BE INSTALLED WHERE CARPET OR RESILIENT TILE IS THE FLOOR FIN. AT ONE SIDE, AND ANOTHER MATERIAL IS FL. FIN. ON THE OTHER SIDE.

24 A6.2 DETAILS VARIOUS SILL CONDITIONS 3" = 1'-0"

31 A6.2 INTERIOR DOOR SILL DETAIL 3" = 1'-0"

HALL & OGLE ARCHITECTS, INC.
208 MAGNOLIA AVENUE
DAYTONA BEACH, FLORIDA 32114
www.hoarchitects.com
PH.(386) 255-6163
FAX.(386)257-5650
AA-C000925

SEAL

REVISIONS

NO.	DATE	DESCRIPTION

Replacement Fire Station # 96
City of Holly Hill, Fl.
1020 Daytona Avenue
Holly Hill , Florida

ARCHITECT OF RECORD
JOHN E. HALL AR0010727
DAVID D. OGLE AR93986

DESIGNED BY	DRAWN BY
JEH	SC/ JH
ISSUE DATE	AE PROJECT NUMBER
18-MAY-2023	2204

SHEET TITLE
DOOR DETAILS

DRAWING NO.
A6.2

Attachment: Exhibit C - Fire Station #96 Bid Set (2023-R-55 : Fire Station Construction)

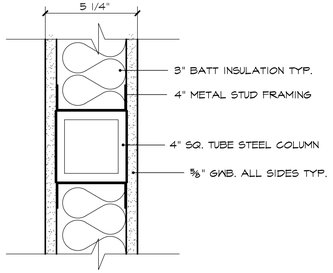

32 A6.3 DETAIL
STEEL TUBE AT 4" STUD WALL
3" = 1'-0"

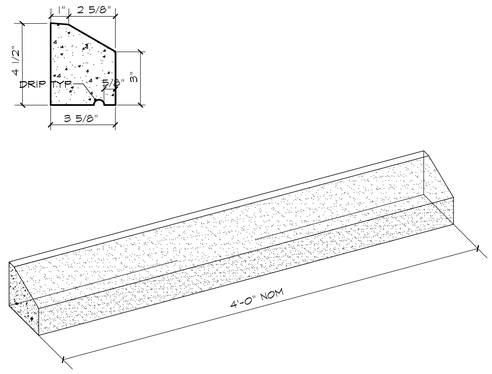

35 A6.3 DETAIL
P.C.C SILL CAP UNIT - "STANDARD UNIT"
1 1/2" = 1'-0"

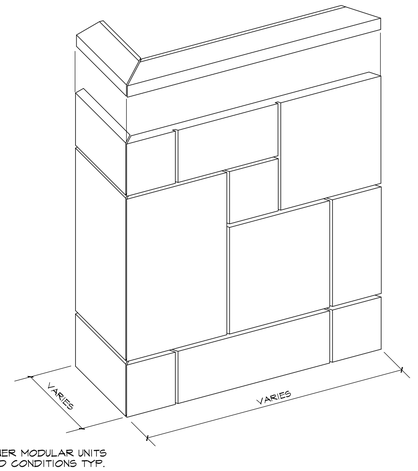

CUSTOM CORNER MODULAR UNITS
TO MEET FIELD CONDITIONS TYP.

37 A6.3 DETAIL
P.C.C/ COQUINA SHELL PANEL • CORNER
3" = 1'-0"

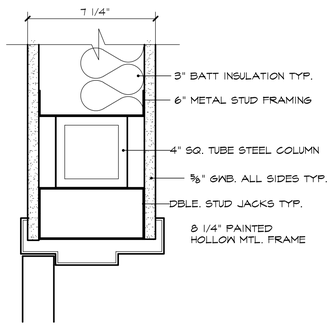

33 A6.3 DETAIL
STEEL TUBE AT 6" STUD WALL
3" = 1'-0"

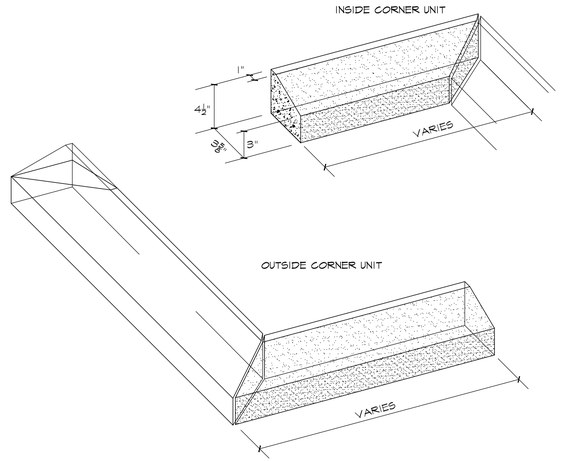

36 A6.3 DETAIL
P.C.C SILL CAP EXTERNAL & INTERNAL CORNER UNITS
1 1/2" = 1'-0"

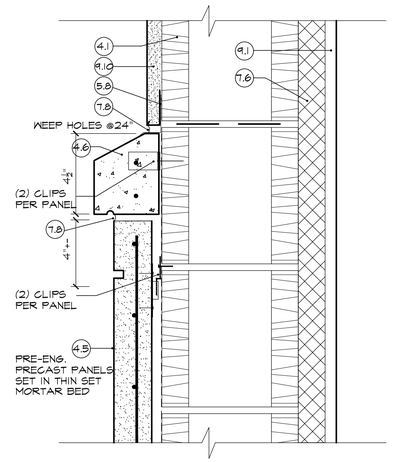

38 A6.3 STUCCO DETAIL • HORIZONTAL SILL CAP
3" = 1'-0"

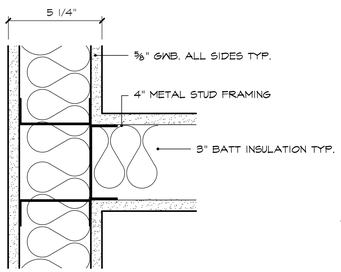

34 A6.3 WALL INTERSECTION
3" = 1'-0"

HALL & OGLE
ARCHITECTS, INC.
208 MAGNOLIA AVENUE
DAYTONA BEACH, FLORIDA 32114
www.hoarchitects.com
PH.(386) 255-6163
FAX.(386)257-5650
AA-C000925

SEAL

REVISIONS

NO.	DATE	DESCRIPTION

Replacement Fire Station # 96
City of Holly Hill, Fl.
1020 Daytona Avenue
Holly Hill , Florida

ARCH/ENGR OF RECORD
JOHN E. HALL AR0010727
DAVID D. OGLE AR93986

DESIGNED BY	DRAWN BY
JEH	SC/ JH
ISSUE DATE	AE PROJECT NUMBER
18-MAY-2023	2204

SHEET TITLE
PLAN DETAILS

DRAWING NO.
A6.3

Attachment: Exhibit C - Fire Station #96 Bid Set (2023-R-55 : Fire Station Construction)

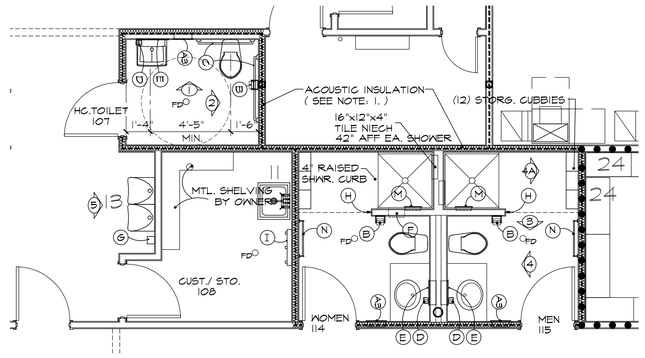

1 A7.0 PARTIAL FLOOR PLAN - RESTROOMS/ CUSTODIAN STORAGE

SCALE: 1/8" = 1'-0"

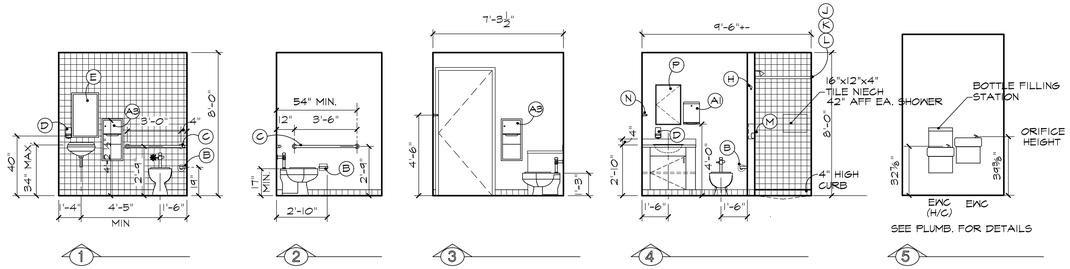

1 2 3 4 5

2 A7.0 WALL ELEVATIONS - RESTROOMS & WATER FOUNTAINS

SCALE: 1/8" = 1'-0"

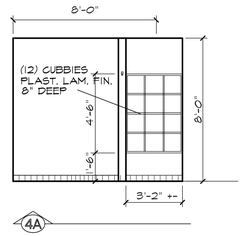

4A

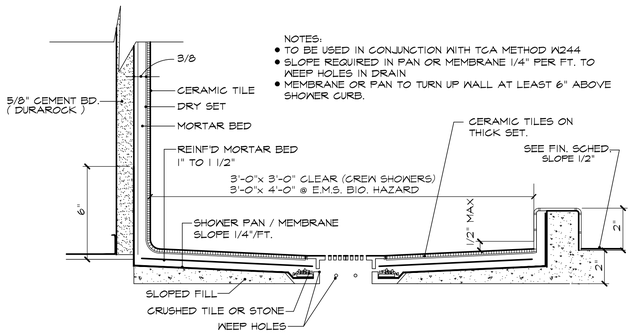

3 A7.0 SHOWER RECEPTOR

SCALE: 1/8" = 1'-0"

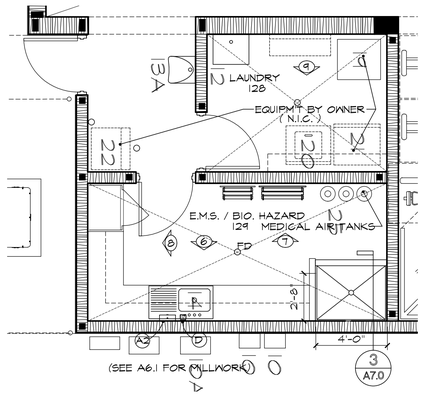

4 A7.0 PARTIAL FLOOR PLAN - EMS/ BIO. HAZARD

SCALE: 1/8" = 1'-0"

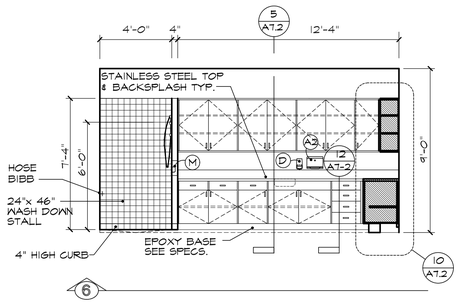

5 A7.2 6 10 A7.2

5 A7.0 WALL ELEVATIONS - EMS/ BIO. HAZARD

SCALE: 1/8" = 1'-0"

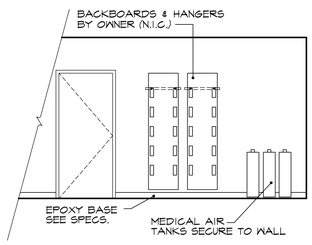

7

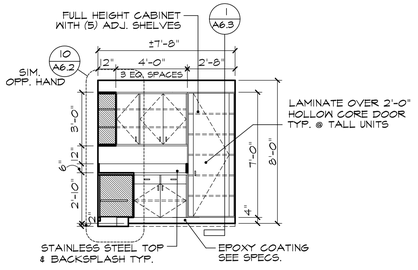

8

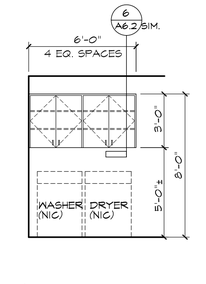

9

6 A7.0 (CONTINUED) WALL ELEVATIONS - EMS/ BIO. HAZARD

SCALE: 1/8" = 1'-0"

A. D. A. NOTES

TOILET ROOMS INDICATED "HANDICAPPED ACCESSIBLE" SHALL CONFORM TO THE REQUIREMENTS OF THE FLORIDA BUILDING CODE FOR HANDICAPPED ACCESSIBILITY INCLUDING ALL AMENDMENTS AND REVISIONS TO DATE. MOUNTING HEIGHTS OF FIXTURES AND ACCESSORIES SHALL BE AS FOLLOWS:

1. WATER CLOSET SEAT HEIGHT - 1'-5" TO 1'-7" A.F.F.
2. CENTER LINE OF WATER CLOSET TO SIDE WALL - 1'-6"
3. FLUSH VALVE HANDLE LOCATED ON LAVATORY SIDE OF W.C.
4. GRAB BAR BEHIND WATER CLOSET - 36" LONG MIN.
5. GRAB BAR ON SIDE OF WATER CLOSET - 42" LONG MIN.
6. GRAB BAR MOUNTING HEIGHT- 33" AFF TO CENTER LINE OF BAR.
7. GRAB BAR DIAMETER - 1 1/2"
8. SPACE BETWEEN GRAB BAR AND WALL - 1 1/2"
9. TOILET PAPER DISPENSER - 26" MAX FROM REAR WALL, 19" AFF
10. BOTTOM EDGES OF MIRRORS WILL BE A MAX. OF 40" A.F.F.
11. KNEE CLEARANCE AT LAVATORY - APRON 24" MIN. HEIGHT, 8" MIN. DEPTH
12. LAVATORY DEPTH 17" MIN.
13. LAVATORY HOT WATER AND DRAIN PIPES SHALL BE INSULATED WHEREVER EXPOSED
14. LAVATORY RIM SURFACE - 34" MAX A.F.F.
15. INTERNATIONAL SYMBOL OF ACCESSIBILITY SHALL BE MOUNTED ON THE EXTERIOR WALL ADJ. TO THE TOILET ROOM DOOR.

* NOTE:
FLUSH VALVE HANDLE TO BE POSITIONED TO FACE BASIN SIDE OF ALL HANDICAPPED ACCESSIBLE REST ROOMS/CUBICLES.

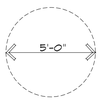

WHEELCHAIR MANEUVERING CIRCLE
(5'-0" DIA. TYPICAL)

TOILET ACCESSORY SCHEDULE

SYMBOL	ITEM	BOBRICK NO.
A1	PAPER TOWEL DISPENSER	B-2620
A2	PAPER TOWEL DISPENSER	B-2621
A3	RECESSED PAPER TOWEL DISP. / WASTE RECEPT.	B-369
B	TOILET PAPER DISPENSER - SURFACE	B-2730
C	GRAB BARS (36" & 42")	B-6806.99
D	SOAP DISPENSER (SURFACE MOUNTED)	B-155
E	MIRROR	B-165 1830
F	SANITARY NAPKIN DISPOSAL (RECESSED)	B-353
G	SURFACE MOUNTED PAPER CUP DISPENSER	B-235
H	ROBE HOOK	B-7671
I	MOP/ BROOM HOLDER-24" (CUST. / STO.)	B-223
J	OPAQUE WHITE CURTAIN	B-204-2
K	CURTAIN HOOKS	B-204-1
L	SHWR. CURTAIN ROD	B-6047
M	RECESSED VANDAL-RESISTANT SOAP DISH	B-974
N	SURFACE MOUNTED TOWEL BAR	B-7674 X 24
O	SURFACE MOUNTED WASTE RECEPTACLE	B-279
P	RECESSED STAINLESS STL. MEDICINE CABINET	B-398

GENERAL NOTES :

1 WALL ELEVATION REFERENCE

1. ALL STUD WALLS SURROUNDING RESTROOMS ARE TO HAVE ACOUSTIC BATT INSULATION.
2. ALL RESTROOM CEILINGS ARE TO BE MOISTURE RESISTANT G.W.B. W/ LOOSE FILL - BLOW IN INSULATION 10" THK. MIN.

HALL & OGLE ARCHITECTS, INC.
208 MAGNOLIA AVENUE
DAYTONA BEACH, FLORIDA 32114
www.hoarchitects.com
PH.(386) 255-6163
FAX.(386)257-5650
AA-C000925

SEAL

REVISIONS

NO.	DATE	DESCRIPTION

Replacement Fire Station # 96
City of Holly Hill, Fl.
1020 Daytona Avenue
Holly Hill , Florida

ARCH/ENGR OF RECORD
JOHN E. HALL AR0010727
DAVID D. OGLE AR93986

DESIGNED BY	DRAWN BY
JEH	SC/ JH
ISSUE DATE	AE PROJECT NUMBER
18-MAY-2023	2204

SHEET TITLE
MILLWORK PLANS AND INTERIOR ELEVATIONS

DRAWING NO.
A7.0

Attachment: Exhibit C - Fire Station #96 Bid Set (2023-R-55 : Fire Station Construction)

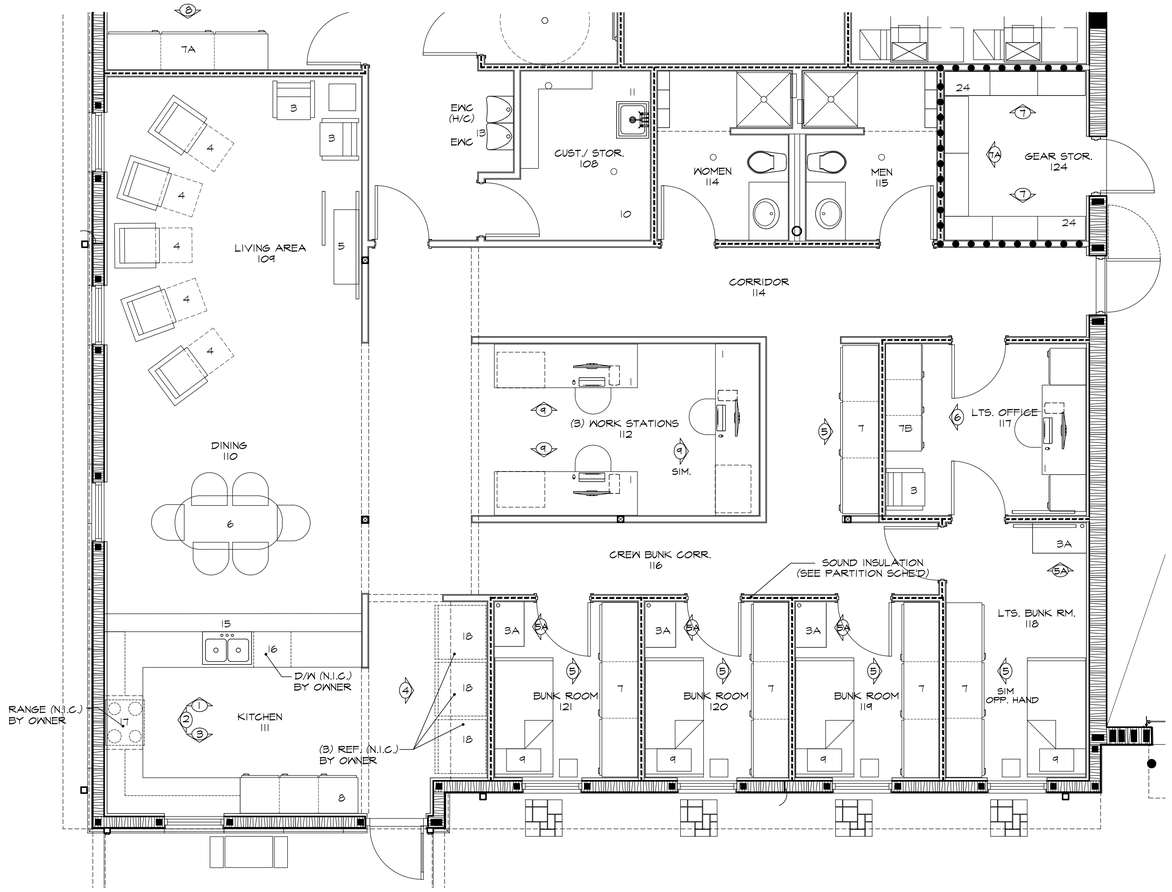

1 A7.1 PARTIAL FLOOR PLAN - KITCHEN/ BUNK ROOMS

SCALE: 1/4" = 1'-0"

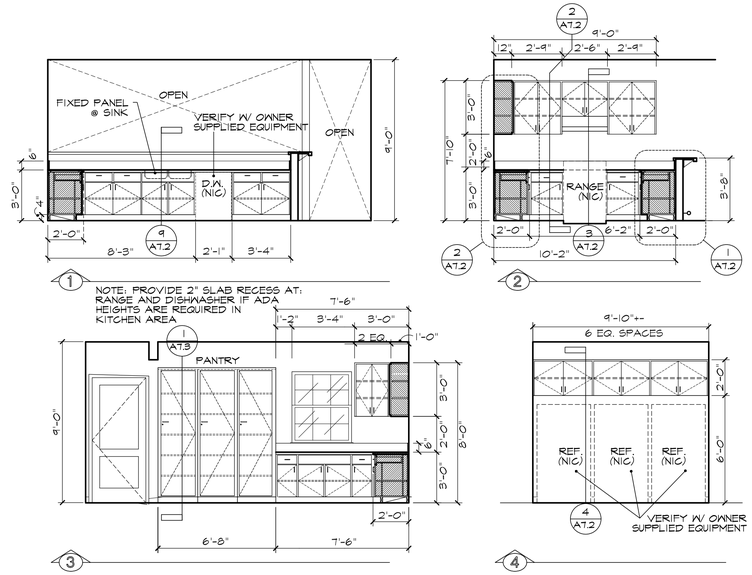

2 A7.1 WALL ELEVATIONS - KITCHEN

1. G.C. TO PROVIDE AND INSTALL ALL NECESSARY WOOD BLOCKINGS WITHIN STUD WALLS TO GIVE SUPPORT TO ALL WALL HUNG CABINETRY.

NO CABINETS ARE TO BE INSTALLED WITH WALL/BD ANCHORS.

SCALE: 1/4" = 1'-0"

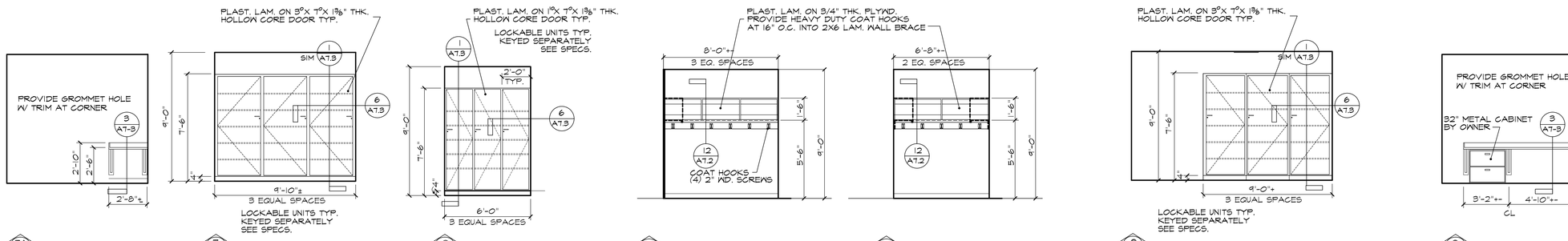

1. LOCKERS TO BE CONSTRUCTED IN PLACE, OR IN A MANNER THAT ALLOWS FOR DISASSEMBLY
2. FACE OF LOCKERS TO BE LAMINATED IN PLACE TO ELIMINATE SEAMS

3 A7.1 WALL ELEVATIONS - BUNK ROOMS CAPTAIN'S OFFICE

SCALE: 1/4" = 1'-0"

4 A7.1 WALL ELEVATIONS - GEAR STORAGE RM

SCALE: 1/4" = 1'-0"

5 A7.1 WALL ELEVATION - FIRE CHIEF'S OFFICE

SCALE: 1/4" = 1'-0"

6 A7.1 WALL ELEVATION - WORK STATIONS

SCALE: 1/4" = 1'-0"

HALL & OGLE ARCHITECTS, INC.
208 MAGNOLIA AVENUE
DAYTONA BEACH, FLORIDA 32114
www.hoarchitects.com
PH:(386) 255-6163
FAX:(386)257-5650
AA-C000925

SEAL

REVISIONS

NO.	DATE	DESCRIPTION

Replacement Fire Station # 96
City of Holly Hill, Fl.
1020 Daytona Avenue
Holly Hill , Florida

ARCHENGR OF RECORD
JOHN E. HALL AR0010727
DAVID D. OGLE AR93986

DESIGNED BY	DRAWN BY
JEH	SC/ JH
ISSUE DATE	AE PROJECT NUMBER
18-MAY-2023	2204

SHEET TITLE
MILLWORK PLANS AND INTERIOR ELEVATIONS

DRAWING NO.
A7.1

Attachment: Exhibit C - Fire Station #96 Bid Set (2023-R-55 : Fire Station Construction)

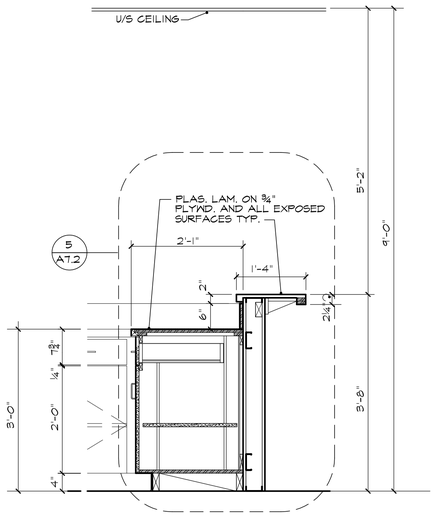

1 SECTION A7.2 — SCALE: 3/4" = 1'-0"

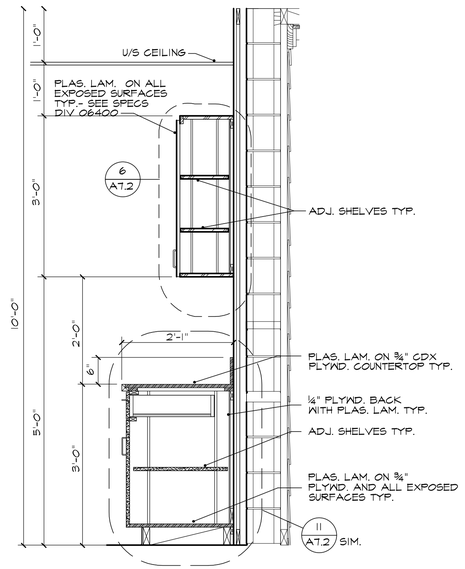

2 SECTION A7.2 — SCALE: 3/4" = 1'-0"

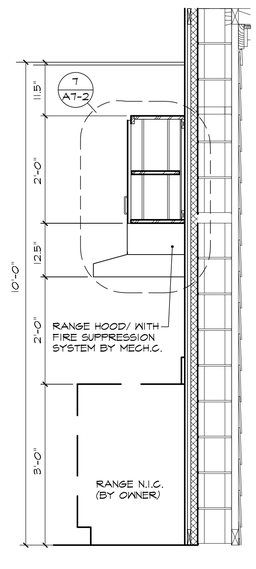

3 SECTION A7.2 — SCALE: 3/4" = 1'-0"

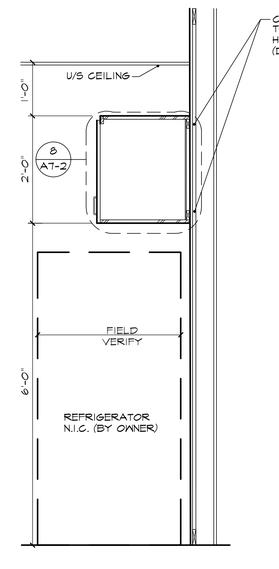

4 SECTION A7.2 — SCALE: 3/4" = 1'-0"

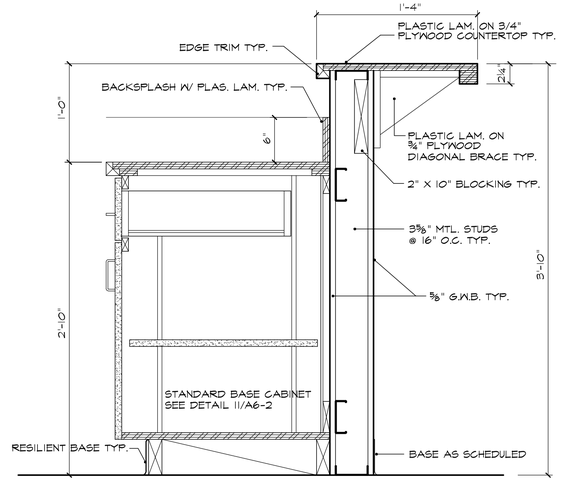

5 SECTION - BAR TOP A7.2 — SCALE: 1½" = 1'-0"

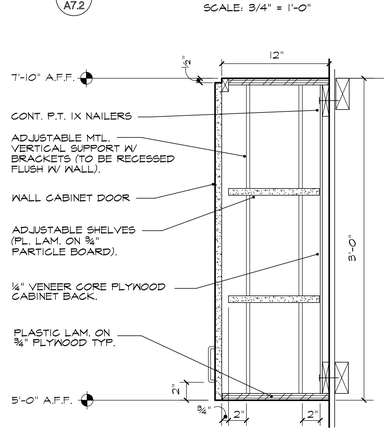

6 TYPICAL WALL CABINET (3'-0") A7.2 — SCALE: 1½" = 1'-0"

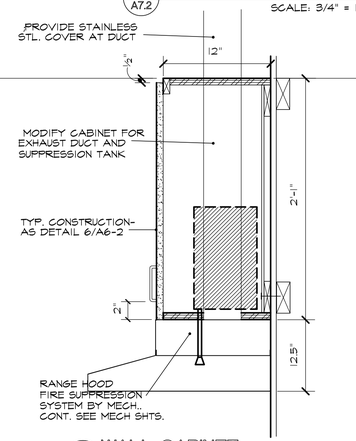

7 WALL CABINET A7.2 (ABOVE RANGE HOOD) — SCALE: 1½" = 1'-0"

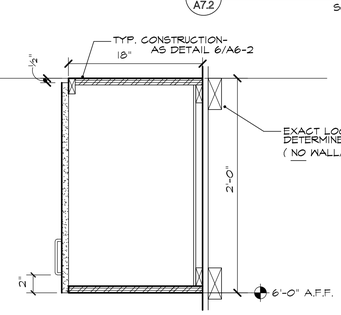

8 WALL CABINET (2'-0") A7.2 (ABOVE REFRIGERATOR) — SCALE: 1½" = 1'-0"

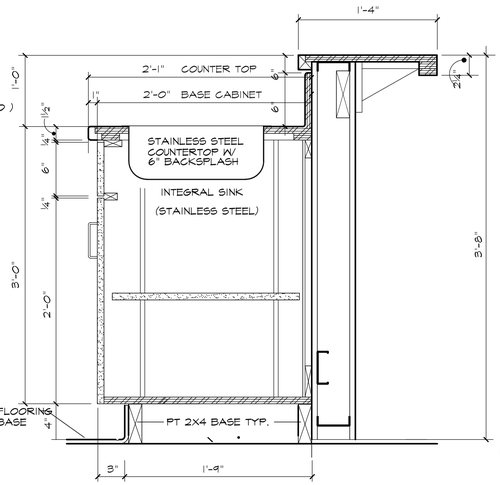

9 CABINET BASE AT KITCHEN SINK A7.2 (AS SHOWN ON PLAN) — SCALE: 1½" = 1'-0"

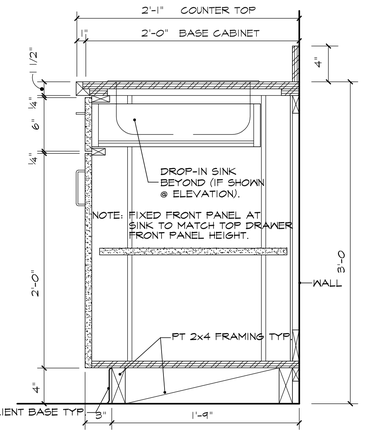

10 BASE CABINET W/ DRAWER & STORAGE BELOW A7.2 — SCALE: 1½" = 1'-0"

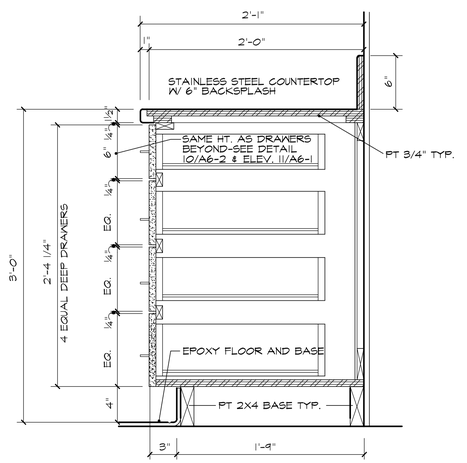

11 BASE CABINET W/ DRAWERS ONLY A7.2 — SCALE: 1½" = 1'-0"

MILLWORK NOTES :

1. FOR ALL CABINET HARDWARE DETAILS. SEE SCHEDULE AND SPECIFICATION.

2. FOR PLASTIC LAMINATE INFORMATION. SEE SPECIFICATION.

3. ALL PLASTIC LAM. APPLIED LOCATIONS TO BE SHOWN ON CABINET SECTIONS/DETAILS.

-COUNTER TOP & BACK SPLASH:
AT ALL EXPOSED SURFACES (VERTICAL OR HORIZONTAL) AND EDGES.

-CABINET WALLS/DIVIDERS/BOTTOM:
AT ALL EXPOSED SURFACES AND EDGES (WHEN DOORS OPEN) ALL HIDDEN SURFACES (WALLS) TO BE APPLIED W/ PLASTIC CABINET LINING.

-CABINET DOORS & DRAWER FRONT PANELS:
LAM. TO BE APPLIED ALL SURFACES AND EDGES.

-DRAWER WALLS:
TO BE EXPOSED SOLID WOOD AND PLYWOOD BOTTOM TO BE VENEER CORE PLYWOOD.

-SHELVES:
TO BE APPLIED W/ PLASTIC LAMINATES AT ALL SURFACES AND EDGES.

4. THICKNESS OF PANEL SHOWN ONLY INDICATE NOMINAL THICKNESS OF PLYWOOD PANEL WITHOUT ADDING THICKNESS OF PLASTIC LAM. SEE PLASTIC LAM. TYPES & THICKNESS IN SPECIFICATION.

5. G.C. TO PROVIDE AND INSTALL ALL NECESSARY WOOD BLOCKINGS WITHIN STUD WALLS TO GIVE SUPPORT TO ALL ALL WALL HUNG CABINETRY.

NO CABINETS ARE TO BE INSTALLED WITH WALL/BD ANCHORS.

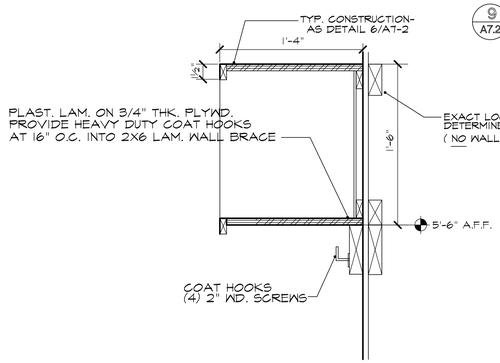

12 OPEN SHELVES AND HOOKS A7.2 — SCALE: 1½" = 1'-0"

HALL & OGLE ARCHITECTS, INC.
208 MAGNOLIA AVENUE
DAYTONA BEACH, FLORIDA 32114
www.hoarchitects.com
PH:(386) 255-6163
FAX:(386)257-5650
AA-C000925

SEAL

REVISIONS

NO.	DATE	DESCRIPTION

Replacement Fire Station # 96
City of Holly Hill, Fl.
1020 Daytona Avenue
Holly Hill , Florida

ARCHENGR OF RECORD
JOHN E. HALL AR0010727
DAVID D. OGLE AR93986

DESIGNED BY	DRAWN BY
JEH	SC/ JH
ISSUE DATE	AE PROJECT NUMBER
18-MAY-2023	2204

SHEET TITLE
MILLWORK DETAILS

DRAWING NO.
A7.2

Attachment: Exhibit C - Fire Station #96 Bid Set (2023-R-55 : Fire Station Construction)

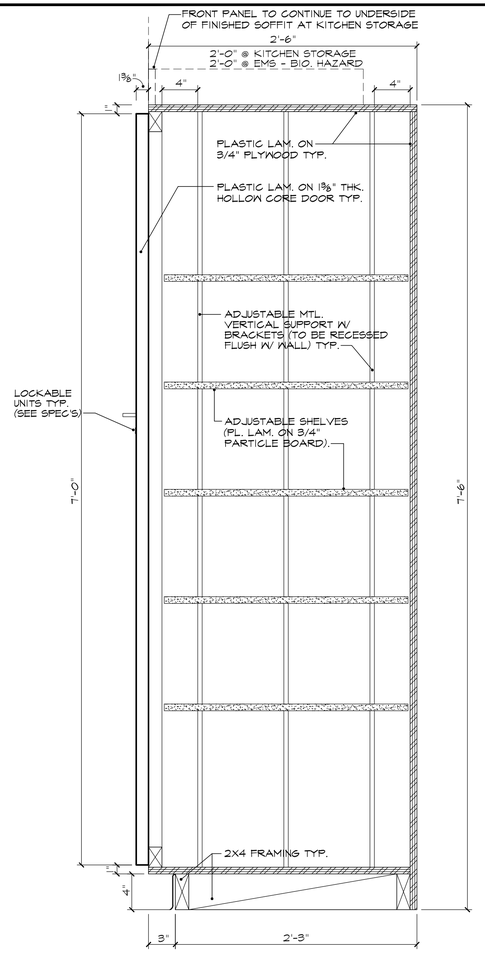

1 A7.3 LINEN CLOSET W/ ADJUSTABLE SHELVES

SCALE: 1½" = 1'-0"

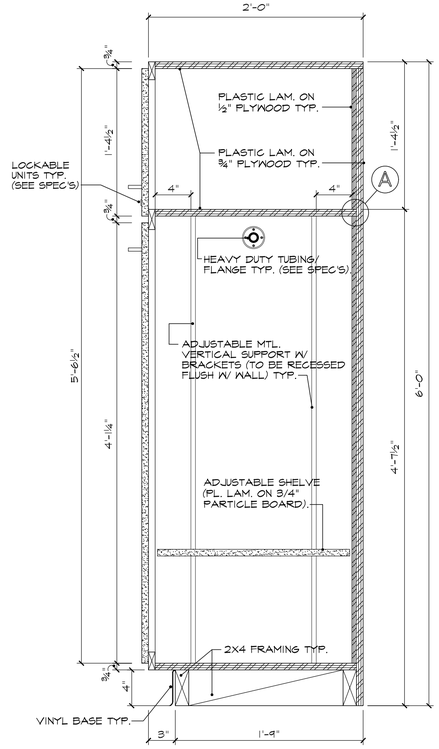

2 A7.3 LOCKERS

SCALE: 1½" = 1'-0"

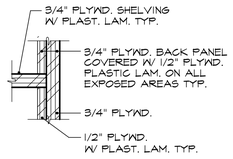

DETAIL 'A'

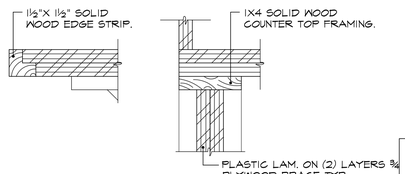

DETAIL 'B' DETAIL 'C'

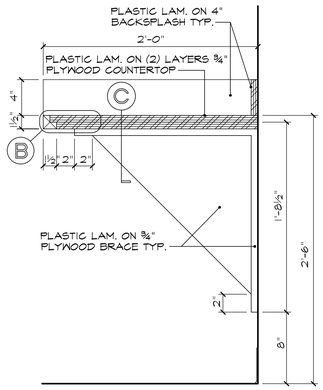

3 A7.3 SECTION - COUNTERTOP

SCALE: 1½" = 1'-0"

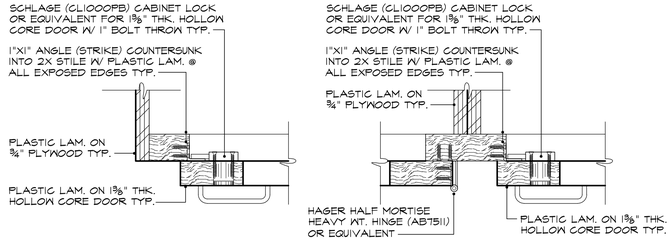

4 A7.3 HINGE & LOCK DETAIL

SCALE: 3" = 1'-0"

BRONZE DEDICATION PLAQUE

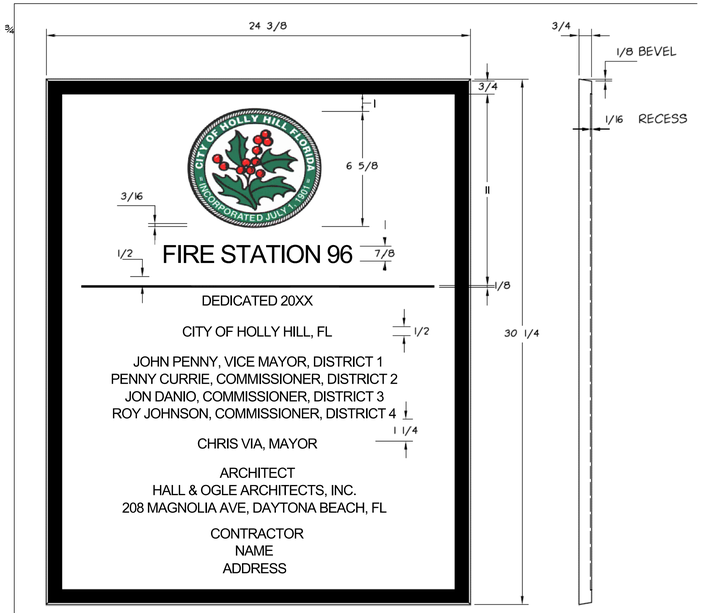

Material: Bronze / Aluminum Bronze Plated
Size: 24" W x 30" H
Mount: Flush

Finish: Satin
Color: Black
Background: Standard Pebble
Boarder: Raised

PROVIDE VANDAL RESISTANT ANCHORS INTO MASONRY

Provide an Allowance for the Bronze Plaque Sign of $_____

6 A7.3 BRONZE DEDICATION PLAQUE (not in contract)

SCALE: 1½" = 1'-0"

INTERIOR SIGNAGE TYPES/ LOCATIONS

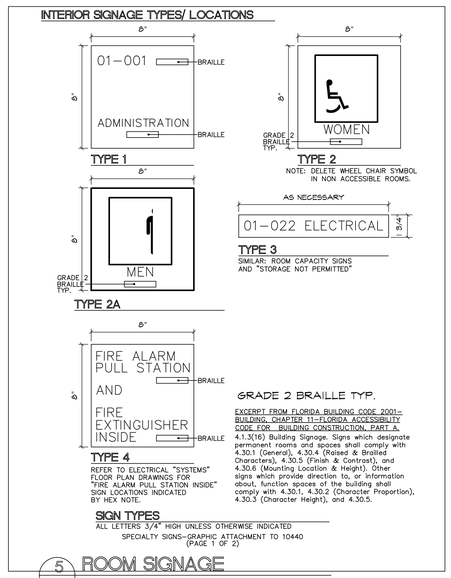

5 A7.3 ROOM SIGNAGE

SCALE: 1½" = 1'-0"

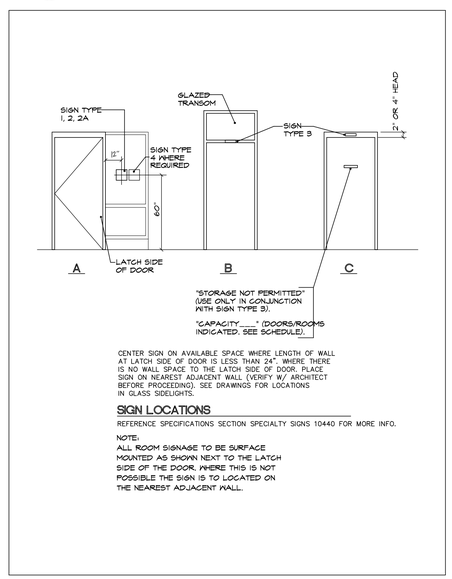

INTERIOR SIGNAGE TYPES/ LOCATIONS

NOTES:

1. PROVIDE ROOM SIGNAGE AT ALL INTERIOR ROOMS (SEE SPECIFICATIONS). GENERAL SIGN TYPES ARE AS FOLLOWS:
   - SIGN TYPE '1' ALL OFFICES / AUXILIARY ROOMS, ETC.
   - SIGN TYPE '2' ACCESSIBLE MEN'S OR WOMEN'S RESTROOMS
   - SIGN TYPE '2A' NON ACCESSIBLE MEN'S OR WOMEN'S RESTROOMS
   - SIGN TYPE '3' MISC. ROOM IDENTIFICATION ITEMS
   - SIGN TYPE '4' LIFE SAFETY INFO. (EXTERIOR OF BLDG)
2. ALL ROOM SIGNAGE TO BE SURFACE MOUNTED AS SHOWN NEXT TO THE LATCH SIDE OF THE DOOR. WHERE THIS IS NOT POSSIBLE THE SIGN IS TO BE LOCATED ON THE NEAREST ADJACENT WALL.
3. SIGNAGE MAY BE MOUNTED ON GLASS WHERE STRIKE SIDE OF DOOR IS FRAMED AT AN INTEGRAL WINDOW IF WIDTH OF WINDOW ALLOWS FOR 8" MIN. CLEAR FROM EDGE OF SIGN TO EDGE OF FRAME. IF CLEARANCE IS LESS THAN MINIMUM, MOUNT SIGN AT WALL ADJACENT TO WINDOW (VERIFY WITH ARCHITECT). PROVIDE SMOOTH BACK PLATE ON OTHER SIDE OF GLASS BEHIND SIGN TYP
4. PROVIDE SIGNAGE AT EXTERIOR DOORS NOT ACCESSIBLE FROM INTERIOR (SUCH AS SYSTEMS AND ELECTRICAL ROOMS, ETC).
5. PROVIDE SIGNAGE AT EXTERIOR WALLS AT THE FOLLOWING ROOMS: MECH./ ELECT. CLASSRMS.

HALL & OGLE ARCHITECTS, INC.
208 MAGNOLIA AVENUE
DAYTONA BEACH, FLORIDA 32114
www.hoarchitects.com
PH.(386) 255-6163
FAX.(386)257-5650
AA-C000925

SEAL

REVISIONS

NO.	DATE	DESCRIPTION

Replacement Fire Station # 96
City of Holly Hill, Fl.
1020 Daytona Avenue
Holly Hill , , Florida

ARCHENGR OF RECORD
JOHN E. HALL AR0010727
DAVID D. OGLE AR93986

DESIGNED BY	DRAWN BY
JEH	SC/ JH
ISSUE DATE	AE PROJECT NUMBER
18-MAY-2023	2204

SHEET TITLE
MILLWORK DETAILS

DRAWING NO.
A7.3

Attachment: Exhibit C - Fire Station #96 Bid Set (2023-R-55 : Fire Station Construction)

GENERAL NOTES:

1. STRUCTURAL DRAWINGS SHALL BE USED IN CONJUNCTION WITH PROJECT SPECIFICATIONS AND ARCHITECTURAL, MECHANICAL, ELECTRICAL, PLUMBING, AND SITE DRAWINGS. CONSULT THESE DRAWINGS FOR OPENINGS, DEPRESSIONS, EQUIPMENT WEIGHTS AND LOCATIONS, EMBEDDED ITEMS AND OTHER DETAILS NOT SHOWN ON STRUCTURAL DRAWINGS.

2. DIMENSIONS AND CONDITIONS MUST BE VERIFIED IN THE FIELD. ANY DISCREPANCIES SHALL BE BROUGHT TO THE ATTENTION OF THE ENGINEER OF RECORD BEFORE PROCEEDING WITH THE AFFECTED PART OF THE WORK.

3. NO STRUCTURAL MEMBER SHALL BE CUT, NOTCHED, OR OTHERWISE ALTERED UNLESS APPROVED IN WRITING BY THE ENGINEER OF RECORD.

4. DO NOT SCALE DRAWINGS.

5. THE STRUCTURE IS DESIGNED TO BE SELF-SUPPORTING AND STABLE AFTER THE BUILDING IS COMPLETE. IT IS THE CONTRACTOR'S RESPONSIBILITY TO DETERMINE ERECTION PROCEDURES AND SEQUENCE TO INSURE SAFETY OF THE BUILDING AND ITS COMPONENTS DURING ERECTION. THIS INCLUDES THE ADDITION OF NECESSARY SHORING, SHEETING, TEMPORARY BRACING, GUYS OR TIEDOWNS.

6. DETAILS LABELED "TYPICAL DETAILS" ON THE DRAWINGS SHALL APPLY TO ALL SITUATIONS OCCURRING ON THE PROJECT THAT ARE THE SAME OR SIMILAR TO THOSE SPECIFICALLY DETAILED. THE APPLICABILITY OF THE DETAIL TO ITS LOCATION ON THE DRAWINGS CAN BE DETERMINED BY THE TITLE OF DETAIL. SUCH DETAILS SHALL APPLY WHETHER OR NOT THEY ARE REFERENCED AT EACH LOCATION. QUESTIONS REGARDING APPLICABILITY OF TYPICAL DETAILS SHALL BE DETERMINED BY THE ENGINEER OF RECORD.

7. THE GENERAL CONTRACTOR SHALL COMPARE THE ARCHITECTURAL AND STRUCTURAL DRAWINGS AND REPORT ANY DISCREPANCIES BETWEEN EACH SET OF DRAWINGS AND WITHIN EACH SET OF DRAWINGS TO THE ARCHITECT AND ENGINEER OF RECORD PRIOR TO THE FABRICATION AND INSTALLATION OF ANY STRUCTURAL MEMBERS.

8. THE CONTRACT STRUCTURAL DRAWINGS AND SPECIFICATIONS REPRESENT THE FINISHED STRUCTURE, AND DO NOT INDICATE THE METHOD OR MEANS OF CONSTRUCTION. THE CONTRACTOR SHALL SUPERVISE AND DIRECT THE WORK AND SHALL BE SOLELY RESPONSIBLE FOR ALL CONSTRUCTION MEANS, METHODS, PROCEDURES, TECHNIQUES, SEQUENCE AND SAFETY. THE ENGINEER DOES NOT HAVE CONTROL OR CHARGE OF, AND SHALL NOT BE RESPONSIBLE FOR, CONSTRUCTION MEANS, METHODS, TECHNIQUES, SEQUENCES, OR PROCEDURES, FOR SAFETY PRECAUTIONS AND PROGRAMS IN CONNECTION WITH THE WORK, FOR THE ACTS OR OMISSION OF THE CONTRACTOR, SUBCONTRACTOR OR ANY OTHER PERSONS PERFORMING ANY OF THE WORK, OR FOR THE FAILURE OF ANY OF THEM TO CARRY OUT THE WORK IN ACCORDANCE WITH THE CONTRACT DOCUMENTS.

9. THE STRUCTURAL ENGINEER'S OBLIGATIONS TO REVIEW SHOP DRAWINGS AND OTHER SUBMITTALS AND TO RETURN THEM IN A TIMELY MANNER ARE CONDITIONED UPON THE PRIOR REVIEW AND APPROVAL OF THE SHOP DRAWINGS OR SUBMITTALS BY THE CONTRACTOR AS REQUIRED IN THE CONSTRUCTION CONTRACT AND THE CONTRACTOR'S SUBMITTAL OF THE SHOP DRAWINGS AND OTHER SUBMITTALS IN ACCORDANCE WITH A WRITTEN SCHEDULE DISTRIBUTED IN ADVANCE TO THE ENGINEER IDENTIFYING THE DATES FOR THE SUBMITTAL OF THE VARIOUS SHOP DRAWINGS AND SUBMITTALS.

10. PERIODIC SITE OBSERVATION BY FIELD REPRESENTATIVES OF AB CONSULTING ENGINEERS IS SOLELY FOR THE PURPOSE OF DETERMINING IF THE WORK OF THE CONTRACTOR IS PROCEEDING IN GENERAL ACCORDANCE WITH THE STRUCTURAL CONTRACT DOCUMENTS. THIS LIMITED SITE OBSERVATION SHALL NOT BE CONSTRUED AS EXHAUSTIVE OR CONTINUOUS TO CHECK THE QUALITY OR QUANTITY OF THE WORK.

11. ALL STRUCTURES REQUIRE PERIODIC MAINTENANCE TO EXCEED LIFESPAN AND TO ENSURE STRUCTURAL INTEGRITY FROM EXPOSURE TO THE ENVIRONMENT. A PLANNED PROGRAM OF MAINTENANCE SHALL BE ESTABLISHED BY THE OWNER. THIS PROGRAM SHALL INCLUDE ITEMS SUCH AS, BUT NOT LIMITED TO, PAINTING OF STRUCTURAL STEEL, PROTECTIVE COATINGS FOR CONCRETE, SEALANTS, CAULKED JOINTS, EXPANSION JOINTS, CONTROL JOINTS, SPALLS AND CRACKS IN CONCRETE, AND PRESSURE WASHING OF EXPOSED STRUCTURAL ELEMENTS EXPOSED TO SALT ENVIRONMENT OR OTHER HARSH CHEMICALS.

12. FINISH FLOOR ELEVATION (FIRST FLOOR) OF 0'-0" (100'-0") IS USED AS A REFERENCE ELEVATION. ACTUAL FLOOR ELEVATION IS + X.X'. SEE CIVIL DRAWINGS FOR ACTUAL ELEVATION.

13. THE USE OF REPRODUCTIONS OF THESE CONTRACT DOCUMENTS AND USE OF CAD FILES BY ANY CONTRACTOR, SUBCONTRACTOR, ERECTOR, FABRICATOR OR MATERIAL SUPPLIER IN LIEU OF PREPARATION OF SHOP DRAWINGS IS PROHIBITED UNLESS PRIOR WRITTEN APPROVAL IS OBTAINED FROM ENGINEER OF RECORD.

BUILDING MOVEMENTS

THE BUILDING MOVEMENT SPECIFIED HEREIN IS ANTICIPATED TO OCCUR AND SHOULD BE CONSIDERED BY THE CONTRACTOR IN THE PERFORMANCE OF THE WORK.

1. SPANDREL BEAM DEFLECTIONS. THE FOLLOWING PROVISION SHOULD BE MADE FOR SUPERIMPOSED LOAD DEFLECTION OF ONE FLOOR RELATIVE TO AN ADJACENT FLOOR IN THE DESIGN, FABRICATION, AND ERECTION OF THE BUILDING CLADDING.
   A. TYPICAL SPANDREL BEAM - 3/8"
      SUPERIMPOSED LOAD DEFLECTION IS DEFINED AS ALL DEFLECTION ANTICIPATED TO OCCUR AFTER THE CLADDING HAS BEEN ERECTED. THE RELATIVE DEFLECTION ABOVE DOES NOT INCLUDE THE FLOOR DEFLECTION CAUSED BY THE WEIGHT OF THE CLADDING ITSELF OR THE DEAD LOAD DEFLECTION OF THE FLOOR FRAMING ITSELF, NOR DOES IT INCLUDE ANY ALLOWANCE FOR FABRICATION OR ERECTION TOLERANCES.

2. THE FOLLOWING PROVISION FOR SUPERIMPOSED LOAD DEFLECTIONS SHALL BE MADE IN THE DESIGN, FABRICATION, AND INSTALLATION OF ALL PARTITIONS, GLASS WALLS, AND OTHER ELEMENTS SUPPORTED BY AND ATTACHED TO THE STRUCTURE.
   A. TYPICAL FLOOR MEMBERS - SPAN/360 BUT NOT LESS THAN 3/8"
   B. TYPICAL ROOF MEMBERS - SPAN/360 BUT NOT LESS THAN 3/8"

3. LATERAL FRAME DEFLECTION (DRIFT). THE FOLLOWING PROVISION FOR LATERAL FRAME DEFLECTION IN THE PLANE OF THE WALL OF ONE FLOOR RELATIVE TO AN ADJACENT FLOOR SHALL BE MADE IN THE DESIGN, FABRICATION AND INSTALLATION OF THE BUILDING CLADDING.

4. MAXIMUM BUILDING DRIFT AT THE EAVE SHALL NOT EXCEED h/600.

DESIGN LOADS:

1. THE STRUCTURAL SYSTEM FOR THIS BUILDING HAS BEEN DESIGNED IN ACCORDANCE WITH THE FLORIDA BUILDING CODE (FBC) 2020 SEVENTH EDITION.

2. THE FOLLOWING SUPERIMPOSED LOADINGS HAVE BEEN UTILIZED:
   ROOF:
   LIVE LOAD - 20 PSF
   RAIN LOAD - 30 PSF
   DEAD LOAD - 5 PSF (AVAILABLE TO RESIST UPLIFT)
   STAIRWAYS:
   LIVE LOAD/STAIRS - 100 PSF
   LIVING AREA:
   LIVE LOAD - 40 PSF
   OFFICE AREAS:
   LIVE LOAD - 50 PSF
   MEZZANINE AREAS:
   LIVE LOAD - 100 PSF

WIND:

FBC CHAPTER 16 - SEE SHEET S4.0 FOR COMPONENTS AND CLADDING PRESSURES
ULTIMATE WIND SPEED - 152 MPH (3 SEC. GUST)
NOMINAL WIND SPEED - 118 MPH
WIND EXPOSURE C
RISK CATEGORY = IV
ENCLOSURE CLASSIFICATION = PARTIALLY ENCLOSED
IMPACT RESISTANT GLASS OR FBC APPROVED ALTERNATIVE IS REQUIRED

SHOP DRAWING REVIEW:

1. SHOP DRAWINGS SHALL ADEQUATELY DEPICT THE STRUCTURAL ELEMENTS AND CONNECTIONS SHOWN ON THE CONTRACT DOCUMENTS. SHOP DRAWINGS WILL BE REVIEWED FOR GENERAL COMPLIANCE WITH THE DESIGN INTENT OF THE CONTRACT DOCUMENTS ONLY. IT SHALL BE THE RESPONSIBILITY OF THE CONTRACTOR TO VERIFY COMPLIANCE WITH THE CONTRACT DOCUMENTS AS TO QUANTITY, LENGTH, ELEVATIONS, DIMENSIONS, ETC. REVIEW OF SUBMITTALS AND SHOP DRAWINGS DOES NOT RELIEVE THE CONTRACTOR OF FULL RESPONSIBILITY FOR ERRORS AND OMISSIONS ASSOCIATED WITH THE PREPARATION OF THE SHOP DRAWINGS.

2. SHOP DRAWINGS SHALL BE REVIEWED BY THE CONTRACTOR AND MARKED "APPROVED" PRIOR TO SUBMITTAL TO THE ARCHITECT/ENGINEER. NON-CONFORMING DRAWINGS SUBMITTALS WILL BE RETURNED WITHOUT REVIEW.

3. SHOP DRAWING SUBMITTALS SHALL INCLUDE ONE GOOD QUALITY REPRODUCIBLE AND THREE SETS OF BLUEPRINTS. ONE SET OF PRINTS WILL BE RETAINED BY THE ENGINEER OF RECORD, ONE BY THE ARCHITECT, ONE BY THE LOCAL BUILDING DEPARTMENT (WHERE REQUIRED) AND THE CONTRACTOR SHALL MAKE PRINTS FROM THE REPRODUCIBLE AS REQUIRED FOR DISTRIBUTION.

4. THE CONTRACT DOCUMENTS WILL GOVERN OVER THE SHOP DRAWINGS UNLESS OTHERWISE SPECIFIED IN WRITING BY THE ENGINEER OF RECORD.

5. CHANGES AND ADDITIONS MADE ON RE-SUBMITTALS SHALL BE CLEARLY FLAGGED AND NOTED. THE PURPOSE OF THE RE-SUBMITTALS SHALL BE CLEARLY NOTED ON THE LETTER OF TRANSMITTAL. ARCHITECT/ENGINEER OF RECORD REVIEW WILL BE LIMITED TO THOSE ITEMS CAUSING THE RE-SUBMITTAL. CONTRACTOR IS RESPONSIBLE FOR COSTS CAUSED BY MULTIPLE RE-SUBMITTALS (MORE THAN ONE) AT ARCHITECT/ENGINEERS' CURRENT HOURLY RATES.

SHOP DRAWINGS FOR SPECIALTY ENGINEERED PRODUCTS:

1. THE FOLLOWING SYSTEMS AND COMPONENTS AS A MINIMUM REQUIRE FABRICATION AND ERECTION DRAWINGS PREPARED BY A DELEGATED ENGINEER REGISTERED IN FLORIDA;
   A. LIGHT GAGE STEEL TRUSSES & EXTERIOR OR LOAD BEARING WALL SYSTEMS
   B. GLAZED CURTAIN WALLS & WINDOWS
   C. PREFABRICATED STEEL STAIRS & RAILINGS
   D. OPEN WEB STEEL JOISTS

2. SUBMITTALS SHALL CLEARLY IDENTIFY THE SPECIFIC PROJECT AND APPLICABLE CODES, LIST THE DESIGN CRITERIA, AND SHOW ALL DETAILS AND DRAWINGS NECESSARY FOR PROPER FABRICATION AND INSTALLATION. CALCULATIONS AND SHOP DRAWINGS SHALL IDENTIFY SPECIFIC PRODUCT UTILIZED. GENERIC PRODUCTS WILL NOT BE ACCEPTED.

3. SHOP DRAWINGS AND CALCULATIONS SHALL BE PREPARED UNDER THE DIRECT SUPERVISION AND CONTROL OF THE DELEGATED ENGINEER.

4. SHOP DRAWINGS AND CALCULATIONS SHALL BE SIGNED AND SEALED BY AN ENGINEER REGISTERED IN THE STATE OF FLORIDA. COMPUTER PRINTOUTS ARE AN ACCEPTABLE SUBSTITUTE FOR MANUAL COMPUTATIONS PROVIDED THEY ARE ACCOMPANIED BY SUFFICIENT DESCRIPTIVE INFORMATION TO PERMIT THEIR PROPER EVALUATION. SUCH DESCRIPTIVE INFORMATION SHALL BE SIGNED AND SEALED BY AN ENGINEER REGISTERED IN THE STATE OF FLORIDA AS AN INDICATION THAT HE/SHE HAS ACCEPTED RESPONSIBILITY FOR THE RESULTS. THE STRUCTURAL ENGINEER WILL RETAIN ONE SIGNED AND SEALED SET FOR THEIR RECORDS.

5. DRAWINGS PREPARED SOLELY TO SERVE AS A GUIDE FOR FABRICATION AND INSTALLATION (SUCH AS REINFORCING STEEL SHOP DRAWINGS OR STRUCTURAL STEEL ERECTION DRAWINGS) AND REQUIRING NO ENGINEERING, DO NOT REQUIRE THE SEAL OF A DELEGATED ENGINEER.

6. CATALOG INFORMATION ON STANDARD PRODUCTS DOES NOT REQUIRE THE SEAL OF A DELEGATED ENGINEER.

7. REVIEW BY THE STRUCTURAL ENGINEER OF RECORD OF SUBMITTALS IS LIMITED TO VERIFYING THE FOLLOWING:
   A. THAT THE SPECIFIED STRUCTURAL SUBMITTALS HAVE BEEN FURNISHED.
   B. THAT THE STRUCTURAL SUBMITTALS HAVE BEEN SIGNED AND SEALED BY THE DELEGATED ENGINEER.
   C. THAT THE DELEGATED ENGINEER HAS UNDERSTOOD THE DESIGN INTENT AND HAS USED THE SPECIFIED STRUCTURAL CRITERIA. (NO DETAILED CHECK OF CALCULATIONS WILL BE MADE).
   D. THAT THE CONFIGURATION SET FORTH IN THE STRUCTURAL SUBMITTALS IS CONSISTENT WITH THE CONTRACT DOCUMENTS. (NO DETAILED CHECK OF DIMENSIONS OR QUANTITIES WILL BE MADE).

8. SUBMITTALS NOT MEETING THE ABOVE CRITERIA WILL NOT BE REVIEWED.

SUBMITTALS

1. ALL SHOP DRAWINGS MUST BE REVIEWED AND STAMPED APPROVED BY THE GENERAL CONTRACTOR PRIOR TO SUBMITTAL.

2. THE GENERAL CONTRACTOR SHALL SUBMIT FOR ENGINEER REVIEW SHOP DRAWINGS FOR THE FOLLOWING ITEMS:
   A. STRUCTURAL STEEL
   B. REINFORCING STEEL
   C. STEEL AND PRECAST CONCRETE STAIRS (*)
   D. METAL ROOF OR FORM DECK
   E. COMPOSITE METAL DECK
   F. LIGHT GAGE TRUSSES & METAL FRAMING (*)
   G. FORMWORK, SHORING, RESHORING (*,#)
   H. CONCRETE MIX DESIGNS
   I. CONSTRUCTION JOINT LOCATIONS IN STRUCTURAL FLOORS
   J. CURTAIN WALLS & WINDOWS (*)
   ITEMS MARKED (*) SHALL HAVE SHOP DRAWINGS SEALED BY A PROFESSIONAL ENGINEER REGISTERED IN THE STATE OF FLORIDA.
   ITEMS MARKED (#) SHALL BE SUBMITTED FOR ENGINEERS RECORD ONLY.

MANUFACTURER'S LITERATURE. SUBMIT TWO COPIES OF MANUFACTURER'S LITERATURE FOR ALL MATERIALS AND PRODUCTS USED IN CONSTRUCTION ON THE PROJECT.

2310 FOUNDATIONS - W/SOIL REPORTS:

SEE THE FOLLOWING REPORT FOR COMPLETE GEOTECHNICAL RECOMMENDATIONS AND INSTALLATION PROCEDURES. SITE PREPARATION AND FOUNDATION INSTALLATION SHALL COMPLY WITH:

REPORT No. 141214
PREPARED BY: UNIVERSAL ENGINEERING SCIENCES
TITLED: GEOTECHNICAL EVALUATION FIRE STATION NO.96 REPLACEMENT HOLLY HILL, VOLUSIA COUNTY, FLORIDA
DATED: FEBRUARY 15, 2023

FOUNDATION DESIGN IS BASED ON A SOIL BEARING PRESSURE OF 2,500 psf.

CONCRETE:

1. SHALL BE PER AN APPROVED MIX DESIGN PROPORTIONED TO ACHIEVE A STRENGTH AT 28 DAYS AS LISTED BELOW WITH A PLASTIC AND WORKABLE MIX

LOCATION	STRENGTH	SLUMP	MAX AGGREGATE	WATER CONTENT
FOUNDATIONS	4000 PSI	4-6"	3/4"	0.48
SLABS ON GRADE	4000 PSI	4-6"	3/4"	0.48
ELEVATED SLABS	4000 PSI	4-6"	3/4"	0.42
BEAMS/COLUMNS	4000 PSI	4-6"	3/4"	0.42
CONCRETE TOPPING	4000 PSI	4-6"	3/8"	0.48
OTHER STRUCTURAL CONCRETE	4000 PSI	4-6"	3/4"	0.45

2. CONCRETE SHALL BE PLACED AND CURED ACCORDING TO ACI STANDARDS AND SPECIFICATIONS.

3. SUBMIT PROPOSED MIX DESIGN WITH RECENT FIELD CYLINDER OR LAB TESTS FOR REVIEW PRIOR TO USE. MIX SHALL BE UNIQUELY IDENTIFIED BY MIX NUMBER OR OTHER POSITIVE IDENTIFICATION. MIX SHALL MEET THE REQUIREMENTS OF ASTM C33 FOR COARSE AGGREGATE.

4. CONCRETE SHALL COMPLY WITH THE REQUIREMENTS OF ASTM STANDARD C94 FOR MEASURING, MIXING, TRANSPORTING, ETC. CONCRETE TICKETS SHALL BE TIME STAMPED WHEN CONCRETE IS BATCHED.

5. THE MAXIMUM TIME ALLOWED FROM THE TIME THE MIXING WATER IS ADDED UNTIL IT IS DEPOSITED IN ITS FINAL POSITION SHALL NOT EXCEED ONE AND ONE HALF (1_1/2) HOURS. IF FOR ANY REASON THERE IS A LONGER DELAY THAN THAT STATED ABOVE, THE CONCRETE SHALL BE DISCARDED. IT SHALL BE THE RESPONSIBILITY OF THE TESTING LAB TO NOTIFY THE OWNER'S REPRESENTATIVE AND THE CONTRACTOR OF ANY NONCOMPLIANCE WITH THE ABOVE.

6. SLABS SHALL BE CURED USING A DISSIPATING CURING COMPOUND MEETING ASTM STANDARD C309 TYPE 1-CLASS D AND SHALL HAVE A FUGITIVE DYE. THE COMPOUND SHALL BE PLACED AS SOON AS THE FINISHING IS COMPLETED OR AS SOON AS THE WATER HAS LEFT THE UNFINISHED CONCRETE. SCUFFED OR BROKEN AREAS IN THE CURING MEMBRANE SHALL BE RECOATED DAILY.

7. CALCIUM CHLORIDES SHALL NOT BE UTILIZED; OTHER ADMIXTURES MAY BE USED ONLY WITH THE APPROVAL OF THE ENGINEER.

8. CONCRETE MIX DESIGNS SHALL INCLUDE A WRITTEN DESCRIPTION INDICATING WHERE EACH PARTICULAR MIX IS TO BE PLACED WITHIN THE STRUCTURE.

9. CONDUITS, PIPES AND SLEEVES SHALL BE PLACED AND SPACED IN ACCORDANCE WITH ACI 318, 6.3.

10. PEA ROCK PUMP MIX USE IS LIMITED TO VERTICAL ELEMENT POURS AND BEAM POURS LESS THAN 60 LINEAL FEET PER POUR.

11. CONCRETE DESIGN MIX SUBMITTALS SHALL INCLUDE TESTED, STATISTICAL BACK_UP DATA AS PER ACI 318.

12. WATER/CEMENT RATIO FOR CONCRETE AT EXTERIOR BALCONIES SHALL NOT EXCEED 0.40 BY WEIGHT.

13. ALL COLUMNS AND BEAMS INTEGRATED IN CMU WALLS ARE 8" AND 12" NOMINAL AND 7-5/8" AND 11-5/8" ACTUAL DIMENSIONS.

REINFORCING STEEL:

1. SHALL BE ASTM A615 GRADE 60 DEFORMED BARS, FREE FROM OIL, SCALE AND RUST AND PLACED IN ACCORDANCE WITH THE TYPICAL BENDING DIAGRAM AND PLACING DETAILS OF ACI STANDARDS AND SPECIFICATIONS.

2. PROVIDE CONCRETE COVER OVER REINFORCEMENT AS FOLLOWS, UNLESS OTHERWISE NOTED:

BEAMS	1-1/2"
SLABS AND JOISTS	3/4"
COLUMNS AND WALLS	1-1/2"
FOOTINGS AND PILE CAPS	3"
CONCRETE EXPOSED TO EARTH OR WEATHER	2"-#6 BARS OR LARGER 1-1/2"-#5 BARS OR SMALLER

3. SECURE APPROVAL OF SHOP DRAWINGS PRIOR TO COMMENCING FABRICATION.

4. PROVIDE STANDARD HOOKS AT DISCONTINUOUS ENDS OF ALL TOP BARS.

5. WHERE REINFORCING IS SHOWN CONTINUOUS, SPLICE BOTTOM BARS OVER SUPPORTS AND TOP BARS AT CENTER OF SPAN. ALL OTHER LAP SPLICES SHALL BE IN ACCORDANCE WITH SPLICE TABLES AND DETAILS SHOWN ON DRAWINGS.

WELDABLE REINFORCING STEEL:

ALL REINFORCING STEEL THAT WILL BE WELDED SHALL MEET THE REQUIREMENTS OF ASTM A706 GRADE 60 DEFORMED BARS.

WELDED WIRE FABRIC:

1. SHALL CONFORM TO ASTM A_185, FREE FROM OIL, SCALE AND RUST AND PLACED IN ACCORDANCE WITH THE TYPICAL PLACING DETAILS OF ACI STANDARDS AND SPECIFICATIONS.

2. MINIMUM LAP SHALL BE ONE SPACE PLUS TWO INCHES.

3. USE OF FLAT MANUFACTURED SHEETS IS REQUIRED (NO ROLLS).

4. INSTALL WWF ON BRICKS OR BOLSTERS AT MID DEPTH OF SLAB U.N.O.

FORMWORK AND SHORING (CONCRETE SLABS AND BEAMS):

1. NO STRUCTURAL CONCRETE SHALL BE STRIPPED UNTIL IT HAS REACHED AT LEAST TWO_THIRDS OF THE 28-DAY DESIGN STRENGTH. A MINIMUM OF 3 STORIES OF SHORING AND (/OR) RESHORING SHALL BE USED WHICH SHALL CONSIST OF ONE COMPLETE SET OF VERTICAL SHORES AND TWO SETS OF VERTICAL SHORES THAT COMPRISE AT LEAST 50% OF A COMPLETE SET.

2. DESIGN, ERECTION AND REMOVAL OF ALL FORMWORK, SHORES AND RESHORES SHALL MEET REQUIREMENTS SET FORTH IN ACI STANDARDS 347 AND 301.

3. DRAWINGS FOR SHORING AND RESHORING SHALL BE PREPARED BY A FLORIDA REGISTERED PROFESSIONAL ENGINEER. SHORING ENGINEER OR REPRESENTATIVE MUST VISIT CONSTRUCTION SITE TO CONFIRM THAT SHORING HAS BEEN INSTALLED PER REQUIREMENTS SHOWN ON SUBMITTED DRAWINGS.

CONSTRUCTION JOINTS:

1. ANY DEVIATION OR ADDITION OF CONSTRUCTION JOINTS FROM THAT SHOWN ON THE DRAWINGS MUST BE REVIEWED AND APPROVED IN WRITING BY THE ENGINEER OF RECORD.
2. ALTERNATE OR ADDED CONSTRUCTION JOINT LOCATIONS ARE ACCEPTABLE ONLY AS A CHANGE ORDER, WHICH WILL INCLUDE ENGINEERING CHARGES BY THE ENGINEER OF RECORD FOR REDESIGN OF THE STRUCTURE, SHORING, ETC.

PLUMBING SLEEVES:

1. MINIMUM SLEEVE SPACING SHALL BE THREE DIAMETERS CENTER TO CENTER OF THE LARGER SLEEVE OR 6" CLEAR BETWEEN SLEEVES, WHICHEVER IS GREATER.

2. PRIOR TO CONSTRUCTION ALL SLEEVE LOCATIONS AND SIZES NOT SHOWN ON THE DRAWINGS SHALL BE APPROVED BY THE ENGINEER.

3. PLACE TWO #3 STIRRUPS @ 3" O.C. EACH SIDE OF SLEEVE PENETRATIONS IN BEAMS.

CONCRETE TESTING:

1. AN INDEPENDENT TESTING LABORATORY SHALL PERFORM THE FOLLOWING TESTS ON CAST IN PLACE CONCRETE:

   A. ASTM C143 _ "STANDARD TEST METHOD FOR SLUMP OF PORTLAND CEMENT CONCRETE
   B. ASTM C39 _ "STANDARD TEST METHOD FOR COMPRESSIVE STRENGTH OF CYLINDRICAL CONCRETE SPECIMENS." A SEPARATE TEST SHALL BE CONDUCTED FOR EACH CLASS, FOR EVERY 50 CUBIC YARDS (OR FRACTION THEREOF), PLACED PER DAY. REQUIRED CYLINDER(S) QUANTITIES AND TEST AGE AS FOLLOWS:
      1 AT 3 DAYS
      1 AT 7 DAYS
      2 AT 28 DAYS

ONE ADDITIONAL RESERVE CYLINDER TO BE TESTED UNDER THE DIRECTION OF THE ENGINEER, IF REQUIRED. IF 28-DAY STRENGTH IS ACHIEVED, THE ADDITIONAL CYLINDER(s) MAY BE DISCARD.

CHEMICAL (ADHESIVE) ANCHORS:

1. SHALL BE AN EQUAL TWO-PART EPOXY POLYMER INJECTION SYSTEM, SUCH HILTI HIT HY 200 ADHESIVE SYSTEM, OR ENGINEER APPROVED SUBSTITUTION.

2. INSTALL IN ACCORDANCE WITH MANUFACTURERS INSTRUCTIONS.

3. THE MANUFACTURER'S REPRESENTATIVE SHALL TRAIN INSTALLERS.

MECHANICAL ANCHORS:

1. SHALL BE "DROP-IN" INTERNALLY THREADED, FLUSH MOUNTED EXPANSION ANCHORS.

2. INSTALL IN ACCORDANCE WITH MANUFACTURERS INSTRUCTIONS.

3. THE MANUFACTURER'S REPRESENTATIVE SHALL TRAIN INSTALLERS.

MASONRY WALLS:

1. MASONRY CONSTRUCTION MATERIAL AND INSPECTIONS SHALL CONFORM TO THE LATEST EDITION OF THE ACI BUILDING CODE REQUIREMENTS FOR CONCRETE MASONRY STRUCTURES (ACI 530-13, ASCE 5-13, TMS 402-2016), SPECIFICATIONS FOR MASONRY STRUCTURES (ACI 530.1-13, ASCE 5-13, TMS 602-2016) ASTM C476-19, ASTM C1019-09 AND NCMA TEK 107.

2. MASONRY UNITS SHALL MEET ASTM C_90 FOR HOLLOW LOAD BEARING TYPE MASONRY WITH UNIT STRENGTH OF 2500 PSI AND 1,800 PSI (M & S) ON THE NET AREA (f'm = 2000 PSI), MORTAR SHALL BE TYPE "M" OR "S" AND MEET ASTM C_270.

3. GROUT SHALL BE 3000 PSI MINIMUM COMPRESSIVE STRENGTH AND MEET ASTM C_476 AND HAVE A SLUMP BETWEEN 8" AND 11" WITH WATER CM RATIO OF 0.55 MAXIMUM AND WITH 3/8" MAXIMUM AGGREGATE.

4. PROVIDE HOOKED DOWELS IN FOUNDATIONS FOR VERTICAL REINFORCING ABOVE. LAP SPLICES 48 BAR DIAMETERS (U.N.O.).

5. BLOCK CELLS SHALL BE GROUT FILLED WITH VERTICAL REINFORCING BARS AT CORNERS, INTERSECTIONS, EACH SIDE OF OPENINGS AND AS SHOWN ON THE DRAWINGS.

6. DOWELS SHALL BE USED TO PROVIDE CONTINUITY INTO THE STRUCTURE ABOVE AND/OR BELOW, UNLESS NOTED OTHERWISE.

7. USE METAL LATH, MORTAR OR SPECIAL UNITS TO CONFINE CONCRETE AND GROUT TO AREA AS REQUIRED.

8. MASONRY SHALL BE LAID IN RUNNING BOND PATTERN UNLESS NOTED OTHERWISE. AT FILLED CELLS LAY UNITS WITH FULL BED JOINTS AROUND CELLS.

9. PROVIDE 9 GAGE GALVANIZED HORIZONTAL JOINT REINFORCING TO MEET ASTM A-153 AT 16" OC UNO(DUR_O_WALL OR ENGINEER APPROVED SUBSTITUTION) i.e. AT ALTERNATE BLOCK COURSES. LADDER TYPE IS RECOMMENDED WITH REINFORCED FILLED CELLS. PROVIDE PREFABRICATED "TEE" OR CORNER SECTIONS AT WALL INTERSECTIONS.

10. CONTROL JOINTS SHALL BE CONSTRUCTED IN CONCRETE MASONRY CONSTRUCTION AT A MAXIMUM HORIZONTAL SPACING BETWEEN JOINTS OF 24'-0" AND NOT MORE THAN 120" FROM CORNERS. SEE ARCHITECTURAL DRAWINGS FOR EXACT LOCATIONS. CONSTRUCT INTERIOR CONTROL JOINTS AT A MAXIMUM HORIZONTAL SPACING OF 32'-0" OR 16'-0" FROM CORNERS. NO JOINTS SHALL BE LOCATED WITHIN 2'-0" OF STEEL BEAM BEARINGS. HORIZONTAL WALL REINFORCING SHALL BE STOPPED EACH SIDE OF CONTROL JOINTS. SEE ARCHITECTURAL DRAWINGS FOR SEALANT REQUIREMENTS AT CONTROL JOINTS.

11. SUBMIT PROPOSED GROUT MIX DESIGNS FOR REVIEW PRIOR TO USE. MIX NUMBER OR OTHER POSITIVE IDENTIFICATION SHALL UNIQUELY IDENTIFY MIX.

12. USE OF SUPERPLASTICIZER IS PROHIBITED.

13. CELLS TO BE GROUT FILLED SHALL HAVE VERTICAL ALIGNMENT SUFFICIENT TO MAINTAIN A CLEAR, UNOBSTRUCTED, CONTINUOUS VERTICAL GROUT SPACE.

14. CLEANOUT OPENINGS (INTERIOR) SHALL BE PROVIDED AT THE BOTTOM OF CELLS TO BE GROUT FILLED IN EACH POUR IN EXCESS OF 5 FEET IN HEIGHT. THE CLEANOUTS SHALL BE SEALED BEFORE GROUTING, AFTER INSPECTION.

15. ANY OVERHANGING MORTAR OR OTHER OBSTRUCTION OR DEBRIS SHALL BE REMOVED FROM THE INSIDES OF SUCH CELL WALLS.

16. VERTICAL REINFORCEMENT SHALL BE HELD IN POSITION AT TOP AND BOTTOM AND AT INTERVALS NOT EXCEEDING 192 BAR DIAMETERS.

17. CELLS CONTAINING REINFORCEMENT SHALL BE FILLED SOLIDLY WITH GROUT. SAMPLE AND TEST GROUT PER ASTM C1019.

18. GROUT SHALL BE POURED IN LIFTS OF 4 FEET MAXIMUM HEIGHT. GROUT SHALL BE CONSOLIDATED AT TIME OF PLACING BY VIBRATING AND RECONSOLIDATED LATER BY VIBRATING BEFORE PLASTICITY IS LOST.

19. WHEN TOTAL GROUT POUR EXCEEDS 5 FEET IN HEIGHT, (HIGH LIFT GROUTING), THE GROUT SHALL BE PLACED IN 4-FOOT LIFTS WITH A MINIMUM OF A 30 MINUTE DELAY BETWEEN LIFTS. MINIMUM CELL DIMENSION SHALL BE IN ACCORDANCE WITH TABLE 5 OF ACI 530.1 (3" X 3" FOR COARSE GROUT, 12 FT. MAXIMUM POUR HEIGHT).

AB CONSULTING ENGINEERS
CA # 27084
301 Thelia Dr.
Orlando, FL 32803
Phone: 407-275-5050
Fax: 407-275-5770
E-mail: ab@abengus.com

ASHRAF ELBAHY, PHD, PE
FLORIDA PE # 52616

HALL & OGLE ARCHITECTS, INC.
208 MAGNOLIA AVENUE
DAYTONA BEACH, FLORIDA 32114
PH: (386) 255-6163
FAX: (386)257-5650
AA-C000925
www.hoarchitects.com

SEAL

REVISIONS

NO.	DATE	DESCRIPTION
		DOCUMENT HISTORY

Replacement Fire Station # 96
City of Holly Hill, Fl.
1020 Daytona Avenue
Holly Hill , Florida

ARCHENGR OF RECORD
ASHRAF ELBAHY, PHD, PE, SE,SI
FL PE NO. 52616

DESIGNED BY	DRAWN BY
AB	JEB
ISSUE DATE	AE PROJECT NUMBER
18-MAY-2023	2204

SHEET TITLE
STRUCTURAL NOTES

DRAWING NO.
S0.0

Attachment: Exhibit C - Fire Station #96 Bid Set (2023-R-55 : Fire Station Construction)

20. WHEN THE GROUTING IS STOPPED FOR ONE HOUR OR LONGER, HORIZONTAL CONSTRUCTION JOINTS SHALL BE MADE BY STOPPING THE POUR OF GROUT NOT LESS THAN 1-1/2 INCH BELOW THE TOP OF THE UPPERMOST UNIT GROUTED.

21. WHERE CONCRETE BEAMS ARE INSTALLED IN CONCRETE MASONRY WALL, SUPPORT CONCRETE WITH 6" SIDE CONTINUOUS STRIPS OF 1/8 SQUARE MESH SOFFIT SCREENING OR PUR-O-STOP OF EQUAL CENTERED OVER BLOCK WORK. USE OF ROOFING FELT STRIPS WILL NOT BE PERMITTED.

22. SINGLE STORY MASONRY WALLS INDICATED AS "PARTITION WALLS" SHALL BE CAST ON THICKENED SLAB FOUNDATIONS AND ARE NOT DESIGNED TO CARRY ANY LOADS FROM THE MAIN BUILDING STRUCTURES. ISOLATE TOP OF PARTITION WALLS FROM UNDERSIDE OF CONCRETE SLAB WITH A MINIMUM 1/2" THICK COMPRESSIBLE MATERIAL.

TIE BEAMS:

1. BEAMS WITH THE PREFIX "TB" SHALL BE OF CONCRETE, POURED AFTER THE MASONRY WALLS BELOW ARE IN PLACE.

2. REINFORCING SHALL BE CONTINUOUS THROUGH TIE BEAMS WITH MINIMUM LAP SPLICES OF 48 BAR DIAMETERS AND BENT BARS AT CORNERS.

3. USE METAL LATH, MORTAR, OR SPECIAL UNITS TO CONFINE CONCRETE TO AREA REQUIRED, IN ACCORDANCE WITH ACI 530.1 (SOLID METAL OR FELT CAVITY CAPS ARE PROHIBITED).

STRUCTURAL STEEL:

1. STEEL WORK SHALL BE NEW AND CONFORM TO THE AISC SPECIFICATION FOR STRUCTURAL STEEL BLDGS. - ALLOWABLE STRESS DESIGN AND LOAD AND RESISTANCE FACTOR DESIGN.

2. MATERIAL SHALL CONFORM TO THE FOLLOWING, EXCEPT AS NOTED:

WIDE FLANGE SHAPES	ASTM A992 Fy=50 KSI)
ANGLES, CHANNELS AND PLATES	ASTM A36 (Fy=36 KSI)
PIPE COLUMNS	ASTM A53, GRADE B (Fy=35 KSI)
RECTANGULAR HSS	ASTM A500, GRADE B (Fy-46 KSI)
ROUND HSS	ASTM A500, GRADE B (Fy=42 KSI)
HIGH STRENGTH BOLTS	ASTM A325
THREADED RODS	ASTM A36 (Fy=36 KSI)
S.M. AND HP SHAPES	ASTM A36 (Fy=36 KSI)
HEAVY HEX NUTS	ASTM AS63
HARDENED STEEL WASHERS	ASTM F436
DIRECT TENSION INDICATORS	ASTM F959, TYPE 325
ANCHOR RODS	ASTM F1554 GR. 36 (Fy=36 KSI)
HEADED STUD ANCHORS	ASTM A108 (Fy=50 KSI)
TWIST-OFF TENSION CONTROL BOLTS	ASTM F1852

3. CONNECTIONS:
   A. BOLTS SHALL BE HIGH-STRENGTH, BEARING TYPE WITH THREADS INCLUDED IN SHEAR PLANES. TIGHTEN BY THE "TURN OF THE NUT" METHOD (SNUG-TIGHT PLUS 1/2 TURN) (U.N.O.).
   B. WELDING ELECTRODES SHALL BE PER AWS D1.1. RETURN FILLET WELDS FOR FRAMED CONNECTIONS 1/2" AT EACH END.
   C. FIELD CONNECTIONS SHALL BE MADE WITH 3/4" BOLTS, EXCEPT AS NOTED OTHERWISE.
   D. DESIGN BEAM CONNECTIONS TO DEVELOP THE REACTIONS SHOWN. IF NOT SHOWN, DESIGN CONNECTIONS TO DEVELOP THE REACTIONS DUE TO THE MAXIMUM ALLOWABLE UNIFORM LOAD FOR THE BEAM SIZE AND SPAN SHOWN, ASSUMING FULL LATERAL SUPPORT PER AISC BEAM (ALLOWABLE UNIFORM LOAD) TABLE VALUE FOR THE CORRESPONDING SPAN, U.N.O.

4. ALL STRUCTURAL STEEL EXPOSED TO EXTERIOR CONDITIONS SHALL BE HOT DIPPED GALVANIZED PER ASTM A123 AND ALL FASTENERS AND HARDWARE SHALL BE HOT DIPPED GALVANIZED PER ASTM A153.

5. GROUT UNDER BRG. PLATES SHALL BE NON-METALLIC, NON-SHRINK TYPE WITH A COMPRESSIVE STRENGTH OF AT LEAST 6,000 PSI IN 28 DAYS.

6. COMPOSITE FLOOR MEMBERS ARE DESIGNED TO BE UNSHORED UNLESS OTHERWISE NOTED. THE WEIGHT OF THE WET CONCRETE WILL RESULT IN DEFLECTIONS OF THE SUPPORTING STEEL DESK, BEAMS, AND GIRDERS. ALL OVERRUNS OF CONCRETE QUANTITIES ARE TO BE ANTICIPATED AND INCLUDED IN THE CONTRACTOR'S BID. The contractor shall coordinate embedded items required for architectural, structural, and mechanical elements. conCRETE FLOORS UTILIZED UNSHORED CONSTRUCTION SHALL BE SCREEDED LEVEL.

7. SIZE AND SPACING OF CONDUITS IN COMPOSITE SLABS SHALL COMPLY WITH THE REQUIREMENTS OF asce 3-91 UNLESS NOTED OTHERWISE ON DRAWINGS.

8. TRUSS STEEL IS ARCHITECTURALLY EXPOSED STRUCTURAL STEEL (AESS) AND SHALL CONFORM TO SECTION 10 OF THE AISC CODE OF STANDARD PRACTICE. AESS SHALL BE SANDBLASTED (SSPC-SP6-82) PRIOR TO PRIMER COAT APPLICATION. PRIMER SHALL BE COMPATIBLE WITH FINAL PAINT COAT AND SHALL BE APPROVED BY FINISH PAINT CONTRACTOR.

9. WHERE TRUSSES ARE INDICATED WITH CONTINUOUS MEMBERS, THEY SHALL BE FULL LENGTH WITHOUT SPICES OR WELDED WITH FULL PENETRATION SHOP WELDS GROUND FLUSH WITH GRINDING IN THE DIRECTION OF APPLIED STRESS AND WITH WELD SOUNDNESS ESTABLISHED BY RADIOGRAPHIC OR ULTRASONIC INSPECTION IN ACCORDANCE WITH THE REQUIREMENTS OF 4.2.5.2 OR 4.2.5.3 OF AWS D1.1. SPLICES WILL NOT BE PERMITTED AT POINTS OF MAXIMUM STRESS. FIELD SPLICES OF TENSION MEMBERS SHALL BE DESIGNED TO DEVELOP 110 PERCENT OF THE SPLICED SECTIONS.

10. HIGH STRENGTH BOLTS IN BEARING CONDITION SUPPORTING SIMPLE SPAN BEAMS NOT SUBJECT TO AXIAL LOADS MAY BE INSTALLED TO "SNUG TIGHT" CONDITION IF NORMAL, SHORT SLOTTED OR OVERSIZED HOLES ARE USED. THE ENGINEER OF RECORD WILL BE THE ULTIMATE AUTHORITY IN THE USE OF "SNUG TIGHT" BOLTS.

WELDING:

1. WELDING SHALL BE DONE BY WELDERS WITH CURRENT CERTIFICATION IN ACCORDANCE WITH AWS D1.1.

2. WELDS SHOWN ON STRUCTURAL DRAWINGS ARE MINIMUM DESIGN REQUIREMENTS. THE FABRICATOR'S SHOP DRAWINGS SHALL REFLECT WELDS IN ACCORDANCE WITH AWS REQUIREMENTS.

3. FULL PENETRATION GROOVE WELDS SHALL BE INSPECTED BY ULTRASONIC TESTING. TWENTY-FIVE PERCENT OF THE WELDS SHALL BE INSPECTED AT RANDOM UNLESS NOTED OTHERWISE. SEE SPECIFICATIONS FOR ADDITIONAL REQUIREMENTS.

4. UNLESS NOTED OTHERWISE ON THE DRAWINGS, GROOVE WELDS SHALL BE FULL PENETRATION.

5. PROVIDE FILLET WELDS AT CONTACT POINTS BETWEEN STEEL MEMBERS SUFFICIENT TO DEVELOP THE ALLOWABLE TENSILE STRENGTH OF THE SMALLER MEMBER AT THE JOINT UNLESS DETAILED OTHERWISE ON THE DRAWINGS. THE MINIMUM FILET WELD SIZE IS 3/16" UNLESS OTHERWISE NOTED.

SHEAR STUD CONNECTORS:

1. SHEAR STUD CONNECTORS SHALL BE FABRICATED AND INSTALLED IN ACCORDANCE WITH AWS D1.1 "STRUCTURAL WELDING CODE", SECTION 7 _ STUD WELDING.

2. ATTACHMENT OF STUDS SHALL BE SUFFICIENT TO DEVELOP THE FULL CAPACITY OF EACH INDIVIDUAL STUD.

3. STUDS SHALL BE TYPE 'B', HEADED STUDS HAVING A MINIMUM TENSILE STRENGTH OF 60,000 PSI. AND SHALL BE OF LENGTH AND DIAMETER SHOWN ON STRUCTURAL DRAWINGS.

STEEL JOISTS:

1. SHALL BE THE SIZE AND SPACING AS SHOWN ON THE STRUCTURAL DRAWINGS AND SHALL BE DESIGNED, FABRICATED, INSTALLED AND BRIDGED IN ACCORDANCE WITH THE STEEL JOIST INSTITUTE SPECIFICATIONS, LATEST EDITION.

2. ENDS OF BRIDGING LINES TERMINATING AT WALLS OR BEAMS SHALL BE ANCHORED THERETO AT TOP AND BOTTOM CHORDS. MINIMUM JOIST BRIDGING TERMINATION CONNECTIONS TO MASONRY SHALL BE L3 X 3 X 1/4 X 3" LONG WITH (1) 1/2" DIAMETER ANCHOR BOLT OR 1/4 X 4 X 4 WITH (1) 1/2" X 5" HEADED STUD TO CONCRETE.

3. BRIDGING SHALL BE WELDED OR BOLTED AT POINTS OF CONTACT. WELD SHALL NOT DAMAGE THE JOIST. CROSS BRIDGING SHALL BE WELDED OR BOLTED AT ITS CENTER POINT.

4. K_SERIES JOISTS SHALL BEAR A MINIMUM OF 2_1/2" ON STEEL BEAMS AND 4" ON CONCRETE BEAMS. JOIST BEARING PLATES TO BE MINIMUM 3/8" X 4" X 7_1/2" WITH (2) 1/2" DIAMETER X 5" SHEAR STUD CONNECTORS. BEARING PLATES FOR BACK TO BACK SINGLE JOISTS SHALL BE MINIMUM 3/8" X 7_1/2" X 7_1/2" WITH (4) 1/2" DIAMETER X 5" SHEAR STUD CONNECTORS. BEARING PLATES SHALL BE CAST INTEGRALLY WITH THE CONCRETE BEAM. WELD JOISTS TO BEARING PLATES WITH A MINIMUM OF (2) 1/8" FILLET WELDS, UNLESS NOTED OTHERWISE.

5. LH_SERIES JOISTS SHALL BEAR A MINIMUM OF 4" ON STEEL BEAMS AND 6" ON CONCRETE BEAMS. JOIST BEARING PLATES TO BE MINIMUM 3/8" X 6" X 9" WITH (2) 1/2" DIAMETER X 5" SHEAR STUD CONNECTORS. BEARING PLATES FOR BACK TO BACK SINGLE JOISTS SHALL BE MINIMUM 3/8" X 9" X 11_5/8" WITH (4) 1/2" DIAMETER X 5" SHEAR STUD CONNECTORS. BEARING PLATES SHALL BE CAST INTEGRALLY WITH THE CONCRETE BEAM. WELD JOISTS TO BEARING PLATE WITH A MINIMUM OF (2) 1/4" FILLET WELDS, UNLESS NOTED OTHERWISE. BACK-TO-BACK JOISTS SHALL BE OFFSET IF CONCRETE BEAM IS LESS THAN 12" NOMINAL WIDTH OR STEEL BEAM IS LESS THAN 8" WIDE.

6. HANGERS FOR SUPPORT OF EQUIPMENT, OR MEMBERS SUPPORTING SUCH HANGERS, SHALL BE LOCATED AT PANEL POINTS OF JOISTS.

7. ROOF JOISTS SHALL BE DESIGNED FOR A NET UPLIFT PRESSURE AS SHOWN ON DRAWINGS.

8. SUBMIT SHOP DRAWINGS FOR REVIEW PRIOR TO FABRICATION. SHOP DRAWING SUBMITTAL SHALL INCLUDE LAYOUT, COMPONENT DESIGNATION, BRIDGING, AND PERTINENT SECTIONS AND DETAILS.

9. SUBMITTALS FOR JOISTS, OTHER THAN STANDARD SJI CATALOG SELECTIONS WHICH HAVE BEEN VERIFIED BY SJI, SHALL BE SIGNED AND SEALED BY AN ENGINEER REGISTERED IN THE STATE OF FLORIDA.

10. JOISTS SHALL BE DESIGNED T SUPPORT THE LOADS LISTED IN SECTION 1.0, THOSE INDICATED ON PLANS AND AN ADDITIONAL CONCENTRATED DEAD LOAD NOT TO EXCEED 500# TO BE PLACED AT ANY PANEL ALONG THE LENGTH OF THE JOIST. DEAD LOADS SHALL BE IN ACCORDANCE WITH THE MATERIALS SHOWN WITHIN THE CONTRACT DOCUMENTS AND SHALL BE NOTED ON THE SHOP DRAWING SUBMITTAL BY THE JOIST MANUFACTURER.

11. JOIST BOTTOM CHORDS SHALL BE DOUBLE ANGLES.

12. JOISTS ARE TO BE DESIGNED TO ALLOW 1" MAXIMUM DIFFERENCE IN CAMBER BETWEEN ADJACENT PARALLEL JOISTS.

13. ALL STEEL JOISTS GREATER THAN FORTY FEET IN LENGTH REQUIRE A ROW OR BOLTED BRIDGING TO BE IN PLACE PRIOR TO SLACKENING OF HOIST LINES. (U.N.O.)

JOIST BEARING:

WHERE STEEL BEAMS SUPPORT JOISTS FRAMING FROM ONE SIDE ONLY, OR WHERE JOISTS FROM ONE SIDE ARE 30% LONGER THAN THE JOISTS ON THE OPPOSITE OF THE BEAM, JOISTS SHALL BEAR FULL WIDTH OF THE STEEL BEAM OR 5-1/2", WHICH EVER IS LESS.

COMPOSITE STEEL DECK:

1. SHALL BE GALVANIZED, CORRUGATED STEEL COMPOSITE DECK OF GAGE AND DEPTH INDICATED ON DRAWINGS, CONFORMING TO STEEL DECK INSTITUTE SPECIFICATION FOR COMPOSITE FLOOR DECK.

2. DECK SHALL HAVE DEFORMATIONS TO PROVIDE ADEQUATE MECHANICAL INTERLOCKING BETWEEN DECK AND CONCRETE FOR COMPOSITE ACTION.

3. PROVIDE #12 TEK SCREWS AT 8" C/C AT EACH SUPPORT.

4. SIDE LAPS BETWEEN DECKS SHALL BE WELDED OR FASTENED USING #10 TEK SCREWS AT A MAXIMUM SPACING OF 12 INCHES.

5. BUTTON PUNCHING OF SIDE LAPS IS NOT PERMITTED.

STEEL ROOF DECK:

1. SHALL BE 1 1/2" DEEP, GAGE GALVANIZED G90 STEEL DECK, AND SHALL CONFORM TO PROVISIONS OF THE STEEL DECK INSTITUTE (SDI) SPECIFICATIONS FOR NON_COMPOSITE STEEL FORM DECK.

2. DECK CENTERING SHALL BE PLACED IN CONFORMANCE WITH MANUFACTURER'S RECOMMENDATIONS AND SHALL BE CONTINUOUS OVER AT LEAST 3 SPANS

3. FASTEN DECK TO STRUCTURAL STEEL SUPPORTS IN A PATTERN AS INDICATED ON PLANS. FASTEN SIDE LAPS AS INDICATED ON PLANS.

4. DIAPHRAGM LOAD CAPACITY SHALL BE MINIMUM OF 400 PLF.

5. DECK SUBMITTALS SHALL INCLUDE THE INTENDED FASTENING PATTERNS AND THE CAPACITY OF EACH PATTERN IN UPLIFT AND DIAPHRAGM ACTION.

LIGHT GAUGE COLD-FORMED STEEL TRUSSES AND RAFTERS:

1. THE LIGHT GAUGE COLD-FORMED STEEL TRUSSES SHALL BE DESIGNED BY TRUSS SUPPLIER USING COLD-FORMED STEEL SYMMETRICAL SHAPES WITH A MIN. YIELD STRENGTH OF 33 KSI MEETING THE REQUIREMENTS OF ASTM A446. ALL LIGHT GAUGE COLD-FORMED STEEL SECTIONS, STUDS, JOISTS AND ACCESSORIES SHALL HAVE HOT DIPPED GALVANIZED STEEL COATING MEETING THE REQUIREMENTS OF ASTM A525 AND C955 WITH G-60 CLASS COATING. ALL TRUSS MEMBERS SHALL BE MIN. 18 GAUGE.

2. ALL LIGHT GAUGE STEEL TRUSS ELEMENTS SHALL BE DESIGNED, FABRICATED AND \ERECTED IN STRICT ACCORDANCE WITH THE LATEST EDITION OF AISI "SPECIFICATIONS FOR THE DESIGN OF COLD-FORMED STEEL MEMBERS" AND OTHER APPLICABLE CODES AND SPECIFICATIONS. TRUSSES SHALL BE DESIGNED TO SUPPORT THE DESIGN LOADS LISTED IN THE GENERAL NOTES AS WELL AS LOADS LISTED ELSEWHERE ON THE DRAWINGS.

3. THE LIGHT GAUGE METAL TRUSS SUPPLIER SHALL SUBMIT TO THE ARCHITECT FOR REVIEW AND APPROVAL, DETAILED SHOP DRAWINGS AND DESIGN CALCULATIONS SIGNED AND SEALED BY A PROFESSIONAL ENGINEER LICENSED TO PRACTICE IN THE STATE OF FLORIDA. FABRICATION OF TRUSSES SHALL NOT BEGIN UNTIL THE SHOP DRAWINGS AND CALCULATIONS HAVE BEEN REVIEWED AND RETURNED APPROVED. REFER TO CONTRACT SPECIFICATIONS FOR APPROVED SUPPLIERS. SUPPLIER/ERECTOR NOT PRE-APPROVED, MUST HAVE QUALIFICATIONS MEETING CONTRACT SPECIFICATIONS APPROVED PRIOR TO BIDDING.

4. CALCULATIONS SHALL INCLUDE, BUT ARE NOT LIMITED TO THE FOLLOWING:
   A. ENGINEERING ANALYSIS SHOWING LOADING, MEMBER STRESSES AND DEFLECTIONS FOR EACH DIFFERENT TRUSS DESIGN BASED ON DESIGN LOADS LISTED ON THE DRAWINGS.
   B. ALL TRUSS MEMBERS, PITCH, SPAN, CAMBER, BEARING, CONFIGURATION, TYPE, LOCATION, SPACING AND LAYOUT OF TRUSSES.
   C. ALL BRIDGING AND BRACING FOR DIAPHRAGM ACTION, CONSTRUCTION LOADS, AND ALL OTHERS, TEMPORARY AND PERMANENT LOADS
   D. ALL TRUSS TO TRUSS CONNECTIONS, TRUSS TO STEEL BEAM, TRUSS TO CONCRETE BEAM, JOISTS, TRACK, GUSSET PLATES, FASTENERS, BRIDGING AND RELATED ACCESSORIES TO BE DESIGNED AND DETAILED FOR ALL LOADING CONDITIONS INCLUDING NET WIND UPLIFT AND REACTIONS FROM HORIZONTAL WIND DIAPHRAGM ACTION.
   E. ALL TRUSS MEMBER SIZES, PROPERTIES, AND ANY YIELD STRENGTH.
   F. SPACING AND LAYOUT OF TRUSSES MEETING REQUIREMENTS INDICTED ON THE DRAWINGS.
   G. NOTE ANY PROPOSED TRUSS LAYOUT CHANGES THAT WOULD EFFECT THE LOCATION OF BEARING WALLS OR FOUNDATION DESIGN OR CONSTRUCTION.
   H. WIND TRUSSES DESIGNED TO TRANSFER THE HORIZONTAL WIND LOADS A NOTED ON THE DRAWINGS.

5. GENERAL CONTRACTOR SHALL COORDINATE TRUSS REQUIREMENTS WITH M/E/P, HVAC AND DUCT WORK REQUIREMENTS.

6. SUBMIT ERECTION DRAWINGS PREPARED BY FABRICATOR FOR APPROVAL BY ARCHITECT, THESE DRAWINGS SHALL INCLUDE:
   A. PLACING DRAWINGS FOR STEEL AND TRUSS SYSTEM SHOWING MEMBERS, PITCH, SPAN, CAMBER, CONFIGURATION, TYPE, LOCATIONS, AND SPACING OF ALL MEMBERS. ALL ATTACHMENTS, BEARINGS, AND ANCHORAGE SHALL BE CLEARLY DETAILED ON DWGS. INDICATE SUPPLEMENTAL STRAPPINGS, BRACINGS, CLIPS & OTHER ACCESSORIES REQUIRED FOR PROPER INSTALLATION, MEETING DESIGN CRITERIA OUTLINED.
   B. CROSS SECTIONS, DRAWINGS AND ELEVATIONS DEPICTING COMPONENT LOCATIONS.
   C. CONNECTION DETAILS SHOWING SCREW TYPES, NUMBER AND LOCATIONS, WELD LENGTHS AND LOCATIONS OR OTHER RELATED FASTENER REQUIREMENTS. ALL CONNECTIONS SHALL MEET OUTLINED DESIGN CRITERIA.

7. THE LIGHT GAUGE STEEL TRUSSES SHALL BE SHOP FABRICATED BY THE TRUSS SUPPLIER. THE SPECIALTY ENGINEER FOR THE STEEL TRUSSES SHALL INSPECT ALL FABRICATED TRUSSES AND SHALL PROVIDE A LETTER CERTIFYING THAT THE TRUSSES ARE FABRICATED IN ACCORDANCE WITH THE APPROVED SHOP DRAWINGS AND WILL SUSTAIN THE DESIGN LOADS SPECIFIED IN THE CONTRACT DOCUMENTS.

8. THE TRUSS SUPPLIER SHALL SUBMIT FOR REVIEW DESIGN DATA FOR ALL SHOP OR FIELD SELF-DRILLING FASTENERS USED FOR CONSTRUCTION OF TRUSSES. PROVIDE CONNECTION DETAILS SHOWING SCREW TYPES, NUMBER AND LOCATIONS, AND OTHER RELATED FASTENER REQUIREMENTS.

9. THE TRUSS SUPPLIER SHALL LAYOUT PANEL POINTS TO ALLOW MECHANICAL DUCTS TO BE PLACED BETWEEN PANEL POINTS. THE LOCATION OF MECHANICAL DUCTS SHOWN ON MECHANICAL DRAWINGS MAY BE FIELD ADJUSTED TO PREVENT INTERFERENCE WITH THE PANEL POINT LAYOUT OF TRUSSES IF APPROVED BY THE MECHANICAL ENGINEER. THE ACTUAL LAYOUT OF ALL TRUSS WEB MEMBERS SHALL BE SHOWN ON THE TRUSS SHOP DRAWINGS.

10. DESIGN LOADS FOR TRUSSES:
    A. BUILDING DESIGN CODE = FLORIDA BUILDING CODE 2020

UPLIFT	SEE SHEET S4.0
DIAPHRAGM	400 PLF
TOP CHORD:	
LIVE LOAD	20 PSF
DEAD LOAD	10 PSF
BOTTOM CHORD:	
LIVE LOAD	8 PSF
DEAD LOAD	10 PSF

    B. DESIGN TRUSS MEMBERS FOR CONCENTRATED LOAD OF SPRINKLER PIPING, AND OTHER MECHANICAL LOADS. SEE MECHANICAL DRAWINGS.
    C. SEE PLAN FOR SPECIAL LOADS @ STAGE AREA AND FOLDING PARTITION WALL.

11. MATCH DEAD LOAD DEFLECTION AND DEAD LOAD CAMBER TO ADJUST TRUSSES TO PREVENT ERECTION PROBLEMS.

12. THE ACTUAL DEAD LOAD OF SPRINKLER AND MECHANICAL PIPING SHOULD BE USED FOR THE DESIGN OF TRUSSES. THE SPRINKLER AND MECHANICAL CONTRACTOR SHALL SUBMIT ACTUAL SIZE LOCATION AND WEIGHT OF ALL PIPING TO BE USED. THE GENERAL CONTRACTOR SHALL SUPPLY THIS INFORMATION TO THE TRUSS SUPPLIER TO BE USED FOR FINAL TRUSS DESIGN. MECHANICAL PIPING SUPPORTS SHALL BEAR ON TRUSS BOTTOM CHORDS. THE BOTTOM CHORD MEMBER SHALL BE CAPABLE OF SUPPORTING THIS LOAD BETWEEN PANEL POINTS.

13. THE BOTTOM CHORD OF ALL TRUSSES SHALL BE DESIGNED FOR UPLIFT DUE TO WIND. THE BOTTOM CHORD SHALL NOT BE ASSUMED TO BE LATERALLY SUPPORTED BY THE CEILING CONSTRUCTION. BOTTOM CHORD BRACING SHALL BE DESIGNED AND FURNISHED BY THE LIGHT GAUGE STEEL TRUSS SUPPLIER.

14. ALL TRUSSES AND CONNECTIONS SHALL BE DESIGNED TO PROVIDE DIAPHRAGM ACTION FOR ROOF SYSTEM CONSIDERING NO ROOF DECK LATERAL SUPPORT.

15. THE CONTRACTOR IS RESPONSIBLE FOR THE TEMPORARY BRACING OF THE STRUCTURE DURING CONSTRUCTION. THE STRUCTURE IS NOT STABLE UNTIL ALL ELEMENTS ARE CONNECTED IN PLACE. DO NOT PLACE ANY LOAD ON TRUSSES UNTIL ALL BRACING IS INSTALLED AS DETAILED ON APPROVED SHOP DRAWINGS. BRACING AND BRIDGING SHALL BE COORDINATED WITH THE LOCATIONS OF MECHANICAL PIPING AND DUCTWORK IN THE ATTIC SPACE BY THE TRUSS SUPPLIER AND THE CONTRACTOR.

5520 RAILINGS:

1. ENGINEERED RAILING SYSTEM AND CONNECTION OF SAME TO THIS STRUCTURE SHALL BE DESIGNED BY AN ENGINEER REGISTERED IN THE STATE OF FLORIDA.

2. THE CONFIGURATION OF THE RAILING SYSTEM SHALL BE AS SHOWN ON THE ARCHITECTURAL DRAWINGS.

3. RAILING SYSTEM AND CONNECTIONS SHALL BE DESIGNED FOR APPLICABLE LOADS AS INDICATED ON THE DRAWINGS AND IN THE BUILDING CODE.

4. THE LOADS SHALL BE CLEARLY INDICATED ON SHOP DRAWINGS AND SHALL COMPLY WITH ALL APPLICABLE CODES.

5. SHOP DRAWINGS SHALL SHOW AND SPECIFY CONNECTIONS UTILIZED WITHIN THE RAILING SYSTEM AS WELL AS CONNECTIONS TO AND LOADS IMPOSED UPON THE STRUCTURAL SYSTEM SHOWN ON THESE DRAWINGS.

6. SHOP DRAWINGS AND CALCULATIONS SHALL BE SIGNED AND SEALED BY AN ENGINEER REGISTERED IN THE STATE OF FLORIDA.

STEEL STAIRS:

1. ENGINEERED STEEL STAIR SYSTEM AND CONNECTIONS OF SAME TO THIS STRUCTURE SHALL BE DESIGNED BY AN ENGINEER REGISTERED IN THE STATE OF FLORIDA.

2. THE CONFIGURATION OF THE STEEL STAIR SYSTEM SHALL BE AS SHOWN ON THE ARCHITECTURAL DRAWINGS.

3. STEEL STAIR SYSTEM AND CONNECTIONS SHALL BE DESIGNED FOR APPLICABLE LOADS AS INDICATED ON THE DRAWINGS AND IN THE BUILDING CODE.

4. THE LOADS SHALL BE CLEARLY INDICATED ON SHOP DRAWINGS.

5. SHOP DRAWINGS SHALL SHOW AND SPECIFY CONNECTIONS UTILIZED WITHIN THE STEEL STAIR SYSTEM AS WELL AS CONNECTIONS TO AND LOADS IMPOSED UPON THE STRUCTURAL SYSTEM SHOWN ON THESE DRAWINGS.

6. SHOP DRAWINGS AND CALCULATIONS SHALL BE SIGNED AND SEALED BY AN ENGINEER REGISTERED IN THE STATE OF FLORIDA.

ABBREVIATIONS

AAC	AUTOCLAVED AERATED CONCRETE
AB	ANCHOR BOLT
ABV	ABOVE
A.C.I.	AMERICAN CONCRETE INSTITUTE
ADDL	ADDITIONAL
AFF	ABOVE FINISH FLOOR
AGGR	AGGREGATE
A.I.S.C.	AMERICAN INSTITUTE OF STEEL CONSTRUCTION
A.I.S.I.	AMERICAN IRON AND STEEL INSTITUTE
AL	ALUMINUM
ALT	ALTERNATE
ARCH	ARCHITECT(URAL)
ASTM	AMERICAN SOCIETY OF TESTING MATERIALS
A.W.S.	AMERICAN WELDING SOCIETY
B/	BOTTOM OF
BB	BOND BEAM
BLDG	BUILDING
BLW	BELOW
BM	BEAM
BOT	BOTTOM
BP	BASE PLATE
BRDG	BRIDGING
BRG	BEARING
BRK	BRICK
BS	BOTH SIDES
BTJ	BOLTED TIE JOIST
BTWN	BETWEEN
C/C	CENTER TO CENTER
CANT	CANTILEVER
CB	CONCRETE BEAM
CC	CONCRETE COLUMN
CFS	COLD-FORMED STEEL
CIP	CAST-IN-PLACE
CJ	CONSTRUCTION JOINT OR CONTROL JOINT
℄, CL	CENTERLINE
CLR	CLEAR(ANCE)
CM	CONSTRUCTION MANAGER
CMU	CONCRETE MASONRY UNIT
COL	COLUMN
CONC	CONCRETE
CONN	CONNECTION
CONT	CONTINUOUS
CONTR	CONTRACTOR
COORD	COORDINATE
CSK	COUNTER SINK
CTR	CENTER
CTRD	CENTERED
CY	CUBIC YARD
DBA	DEFORMED BAR ANCHOR
DIA	DIAMETER
DIAG	DIAGONAL
DL	DEAD LOAD
DN	DOWN
DTL	DETAIL
DWG	DRAWING
DWL	DOWEL
EA	EACH
EE	EACH END
EF	EACH FACE
EJ	EXPANSION JOINT
ENG	ENGINEER
EOS	EDGE OF SLAB
EL	ELEVATION
EQ	EQUAL
EQ SP	EQUAL SPACE(S) (ING)
ES	EACH SIDE
EW	EACH WAY
EXP	EXPANSION
EXT	EXTERIOR
F/	FACE OF
FD	FLOOR DRAIN
FDN	FOUNDATION
FF	FINISHED FLOOR
FIN	FINISH
FL	FLOOR
FLG	FLANGE
FMG	FRAMING
FS	FAR SIDE
FT	FOOT
FTG	FOOTING
ga	GAUGE
GALV	GALVANIZE(D)
GB	GRADE BEAM
GC	GENERAL CONTRACTOR
GFC	GROUT FILLED CELL(S) / COURSE
GLB	GLU-LAM BEAM
GR	GRADE
HC	HOLLOW-CORE
HK	HOOK
HORIZ	HORIZONTAL
HP	HIGH POINT
HS	HEADED STUD
HSS	HOLLOW STRUCTURAL SECTION
ID	INSIDE DIAMETER
IF	INSIDE FACE
INT	INTERIOR
JST	JOIST
JT	JOINT
K	KIP
KO	KNOCK-OUT
lb, #	POUND(S)
LG	LONG
LL	LIVE LOAD
LLBB	LONG LEG BACK-TO-BACK
LLH	LONG LEG HORIZONTAL
LLV	LONG LEG VERTICAL
LNTL	LINTEL
LSL	LONG SLOTTED
LOC	LOCATION
LONG	LONGITUDINAL
LP	LOW POINT
LW	LONG WAY
MAS	MASONRY
MAX	MAXIMUM
MB	MACHINE BOLT
MBM	METAL BUILDING MFR
MC	MOMENT CONNECTION
MCJ	MASONRY CONTROL JT
ME	MONOLITHIC EDGE
MECH	MECHANICAL
MEZZ	MEZZANINE
MF	MONOLITHIC FOOTING
MFR	MANUFACTURE(ER)
MIN	MINIMUM
MISC	MISCELLANEOUS
MO	MASONRY OPENING
MS	METAL STUD
MTL	METAL
MWF	MONOLITHIC WALL FOOTING
NIC	NOT IN CONTRACT
NS	NEAR SIDE
NTS	NOT TO SCALE
OA	OVERALL
OC	ON CENTER
OD	OUTSIDE DIAMETER
OF	OUTSIDE FACE
OH	OPPOSITE HAND / OVERHEAD
OPNG	OPENING
OPP	OPPOSITE
PAF	POWDER-ACTUATED FASTENER(S)
PB	PRE-CAST BEAM
PEMB	PRE-ENGINEERED METAL BUILDING
PERP	PERPENDICULAR
PC	PRECAST
ℙ, PL	PLATE
PLS	PLACES
PLF	POUNDS PER LINEAR FOOT
PLYWD	PLYWOOD
PNL	PANEL
PSF	POUNDS PER SQUARE FOOT
PSI	POUNDS PER SQUARE INCH
PTN	PARTITION
R	RADIUS
RC	REINFORCED CONCRETE
REF	REFERENCE
REINF	REINFORCE(D) (ING)
REQ	REQUIRE
REQ'D	REQUIRED
RF	ROOF
RM	ROOM
RP	RADIUS POINT
RTN	RETURN
RW	RETAINING WALL
SBC	SOUTHERN STANDARD BUILDING CODE
SCH	SCHEDULE
SECT	SECTION
SF	STEPPED FOOTING
SHT	SHEET
SIM	SIMILAR
SJ	SAWCUT JOINT
SJI	STEEL JOIST INSTITUTE
SL	SLOPE
SLBB	SHORT LEG BACK-TO-BACK
SOG	SLAB ON GRADE
SP	SPACE(S)
SPECS	SPECIFICATIONS
SQ	SQUARE
SS	STAINLESS STEEL
SSL	SHORT SLOTTED
STD	STANDARD
STIFFR	STIFFENER
STL	STEEL
STR	STRENGTH
STRL	STRUCTURAL
SW	SHORT WAY / SHEAR WALL
SYMM	SYMMETRICAL
SYP	SOUTHERN YELLOW PINE
T&B	TOP AND BOTTOM
TB	TIE BEAM
TC	TIE COLUMN
TEMP	TEMPERATURE
THK	THICK
TOPG	TOPPING
TRANS	TRANSVERSE
TYP	TYPICAL
T/	TOP OF
UNO	UNLESS NOTED OTHERWISE
VIF	VERIFY IN FIELD
VERT	VERTICAL
WD	WOOD
WF	WALL FOOTING
WO	WINDOW OPENING (MASONRY)
WP	WORKING POINT
WS	WATERSTOP
WWF	WELDED WIRE FABRIC
W/	WITH

CONSULTING ENGINEERS
CA # 27084
301 Trails Dr.,
Orlando, FL 32807
Tel:407-275-3052
Fax:407-273-5775
E-mail:ab@abengr.com

ASHRAF ELBAHY, PhD, PE
FLORIDA PE # 52616

HALL & OGLE ARCHITECTS, INC.
208 MAGNOLIA AVENUE
DAYTONA BEACH, FLORIDA 32114
www.hoarchitects.com
PH.(386) 255-6163
FAX.(386)257-5650
AA-C000925

SEAL

REVISIONS

NO.	DATE	DESCRIPTION

Replacement Fire Station # 96
City of Holly Hill, Fl.
1020 Daytona Avenue
Holly Hill , Florida

ARCHENGR OF RECORD
ASHR

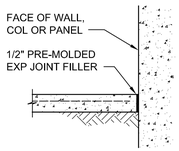

EXPANSION JOINT (EJ)

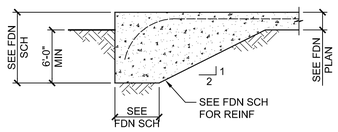

NOTE:
1. SIZE AND REINF VARIES. SEE FOUNDATION SCHEDULE.

MONOLITHIC EDGE (ME)

NOTES:
1. SLAB SHALL BE CUT AS SOON AS AGGREGATE DOES NOT DISLODGE AND BEFORE CONCRETE STARTS TO COOL. WAITING PERIOD WILL TYPICALLY VARY FROM 1 HOUR IN HOT WEATHER TO 4 HOURS IN COLD WEATHER, BUT IN NO CASE SHALL THE TIME BETWEEN FINISHING & SAWCUTTING EXCEED 8 HOURS. THE DEPTH OF THE SAWCUT SPECIFIED IN THE DETAIL SHALL BE HELD CONSTANT THROUGH- OUT THE CUTTING PROCESS. DO NOT CUT TOO DEEP OR TOO SHALLOW. ONLY PLACE AN AMOUNT OF SLAB THAT CAN BE FINISHED AND SAWCUT THE SAME DAY.
2. PLACE REINFORCING 1 1/2" CLEAR FROM TOP OF SLAB.
3. HAND-TOOL JOINT TO FACE OF WALL WHERE SAW BLADE CANNOT REACH.

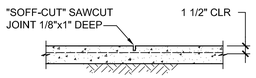

SAWCUT JOINT (SJ)

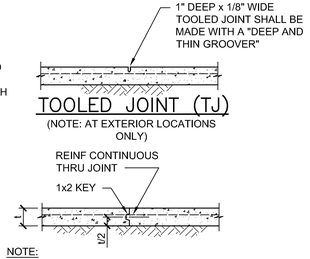

TOOLED JOINT (TJ)
(NOTE: AT EXTERIOR LOCATIONS ONLY)

NOTE:
1. WHEN FIBER REINFORCEMENT IS USED IN SLAB, PROVIDE #3x2'-0" @ 24" OC CENTERED ACROSS JOINT @ MID-DEPTH THROUGH KEY.

CONSTRUCTION JOINT (CJ), KEYED

A S0.3 SLAB–ON–GRADE DETAILS
SCALE: NTS

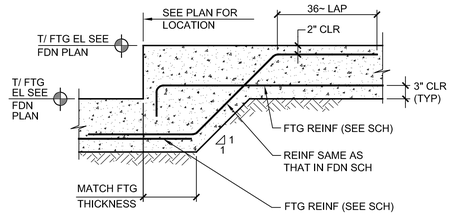

B S0.3 TYPICAL STEP FTG DETAIL (IF REQUIRED)
SCALE: NTS

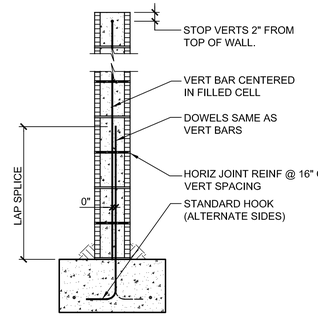

C S0.3 TYPICAL FILLED CELL DETAILS
SCALE: NTS

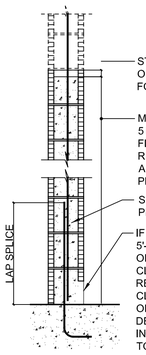

NOTES:
1. DO NOT GROUT UNTIL MORTAR HAS SET SUFFICIENTLY TO WITHSTAND THE PRESSURE OF THE GROUT. WAIT NOT LESS THAN 24 HOURS.
2. WAIT A MINIMUM OF 40 MINUTES BEFORE PLACING NEW GROUT ON A PREVIOUS LIFT.
3. MAXIMUM WALL HEIGHT FROM TOP OF FOOTING OR PREVIOUS GROUT POURS LAID UP AT ONE TIME SHALL BE 12'-0".
4. THE MINIMUM CONTINUOUS UNOBSTRUCTED CLEAR AREA IN CELL TO RECEIVE GROUT MUST BE NOT LESS THAN 3"x3". MORTAR FINS MUST BE REMOVED AS BLOCK PLACEMENT PROCEEDS. MORTAR DROPPINGS MUST BE KEPT OUT OF CELLS WHICH ARE TO BE GROUTED.

D S0.3 TYPICAL GROUTING DETAIL
SCALE: NTS

NOTES:
1. GC SHALL CONTACT ENGINEER IF OPENING SIZE AND/OR SPACING EXCEEDS THAT SHOWN.
2. MASONRY WALL SHOWN HERE, MAY BE USED AT TILT-UP WALL ALSO.
3. WRAP PIPE(S) W/ A MIN 1" THICK COMPRESSIBLE PIPE INSULATION FOR ENTIRE WIDTH OF FTG + 4" MIN EA SIDE. GROUT VOID SOLID.

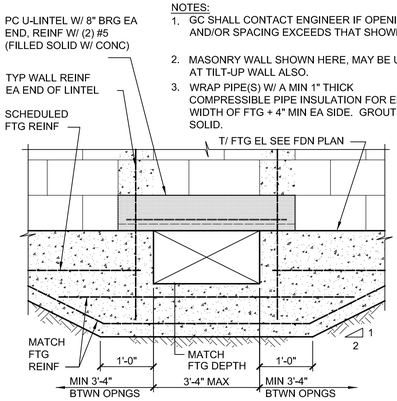

OPTION 1 (FTG OPENING)

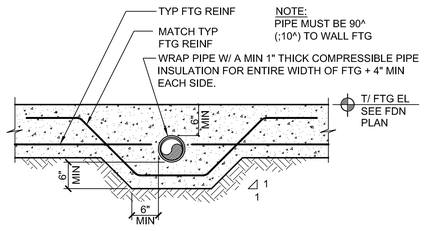

OPTION 2 (PIPE THRU FTG)

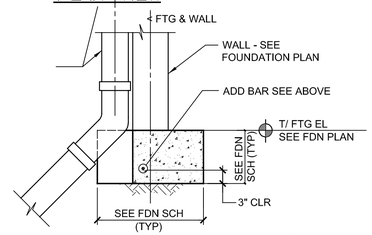

OPTION 3 (NOTCH IN FTG)

E S0.3 DETAIL – FOOTING PENETRATIONS
SCALE: NTS

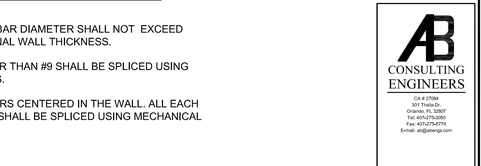

PLAN VIEW

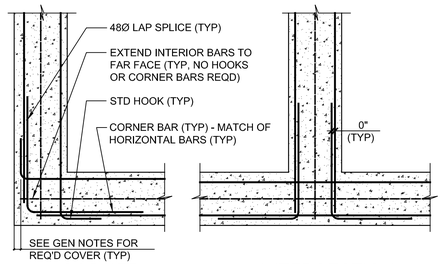

CORNER INTERSECTION

F S0.3 REINF DEVELOPMENT DETAIL
SCALE: NTS

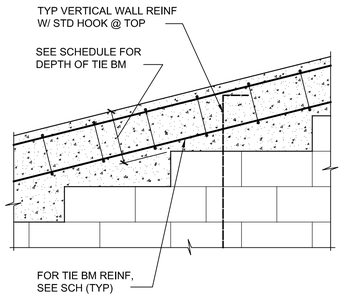

G S0.3 DETAIL – RAKED TIE BEAM

NOTE:
JOB SITE MIXING OF GROUT SHALL NOT BE PERMITTED. TESTING SHALL CONFORM TO ASTM C1019. SEE TEST MOLD DETAIL BELOW. SEE SCHEDULE UNDER CONCRETE NOTES FOR COMPRESSIVE STRENGTH AND SLUMP REQUIREMENTS.

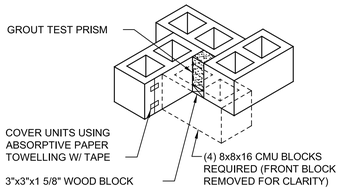

DETAIL – MASONRY GROUT TEST MOLD (ASTM C–1019)

NOTE:
MINIMUM LAP SPLICES FOR REINFORCED CMU WITH f'm = 1500 psi PER 2004 FBC SECTION 2107.2.3:

BAR SIZE / CMU SIZE	#4	#5	#6	#7	#8	#9
8"	25"	31"	57"	79"	87"	NOTE 1
12"	25"	31"	53"	61"	75"	84"

NOTES:
1. NOT ALLOWED. MAXIMUM BAR DIAMETER SHALL NOT EXCEED ONE-EIGHTH OF THE NOMINAL WALL THICKNESS.
2. REINFORCING BARS LARGER THAN #9 SHALL BE SPLICED USING MECHANICAL CONNECTORS.
3. SCHEDULE IS ONLY FOR BARS CENTERED IN THE WALL. ALL EACH FACE REINFORCING BARS SHALL BE SPLICED USING MECHANICAL CONNECTORS.

H S001 MISC DETAILS
SCALE: NTS

HALL & OGLE ARCHITECTS, INC.
208 MAGNOLIA AVENUE
DAYTONA BEACH, FLORIDA 32114
PH: (386) 255-5163
FAX: (386)257-5650
AA-C000925
www.hoarchitects.com

SEAL

REVISIONS

NO.	DATE	DESCRIPTION

DOCUMENT HISTORY

Replacement Fire Station # 96
City of Holly Hill, Fl.
1020 Daytona Avenue
Holly Hill , Florida

ARCHENGR OF RECORD
ASHRAF ELBAHY, PHD, PE, SE,SI
FL PE NO. 52616

DESIGNED BY	DRAWN BY
AB	JEB
ISSUE DATE	AE PROJECT NUMBER
18-MAY-2023	2204

SHEET TITLE
TYPICAL DETAILS

DRAWING NO.
S0.2

AB CONSULTING ENGINEERS
CA # 27084
301 Trella Dr.
Orlando, FL 32807
Tel: 407-275-3060
Fax: 407-275-6779
E-mail: ab@abengs.com
ASHRAF ELBAHY, PhD, PE
FLORIDA PE # 52616

Attachment: Exhibit C - Fire Station #96 Bid Set (2023-R-55 : Fire Station Construction)

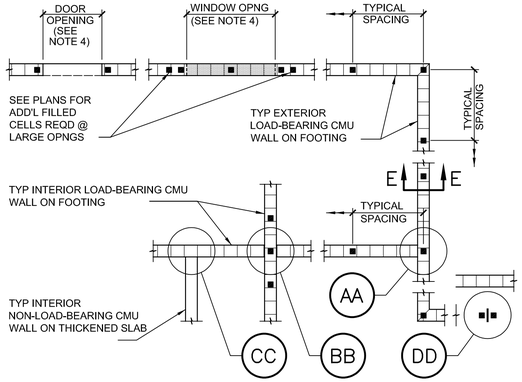

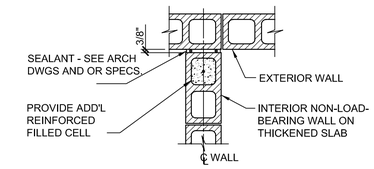

CC INTERSECTION OF LOAD BRG & NON–LOAD BRG WALLS

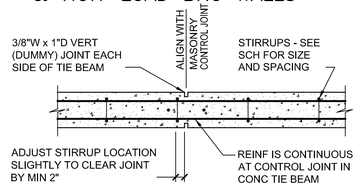

MCJ @ TIE BEAM

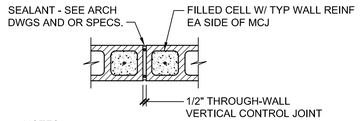

NOTES:

1. THROUGH-WALL JOINT SHALL BE CONTINUOUS WITHOUT INTERRUPTION FROM FOUNDATION TO TOP OF WALL.
2. TERMINATE TYPICAL HORIZONTAL JOINT REINFORCING 2" FROM JOINT.
3. MAXIMUM SPACING OF CONTROL JOINTS SHALL BE 3 x (WALL HEIGHT) OR 50'-0", WHICHEVER IS LESS.

DD MAS CONTROL JOINT (MCJ)

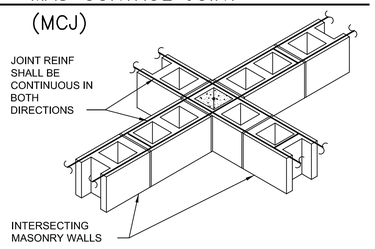

NOTES:

1. SEE DETAIL "DD" FOR LOCATING MASONRY CONTROL JOINTS. CONTRACTOR SHALL SUBMIT MCJ PLAN TO ARCHITECT FOR APPROVAL.
2. SEE ARCHITECTURAL DRAWINGS FOR OPENING SIZES AND LOCATIONS.
3. SEE FDN PLAN NOTES FOR REINFORCED FILLED CELL SIZE & SPACING.
4. IF MASONRY OPENING IS GREATER THAN 4'-0", MULTIPLE FILLED CELLS MAY BE REQUIRED AT JAMBS. OPENINGS AND ADDITIONAL BARS WILL BE SHOWN ON PLAN(S).
5. SEE MASONRY NOTES ON GENERAL NOTE SHEETS FOR HORIZONTAL JOINT REINFORCING AND OTHER ADDITIONAL INFORMATION.

ILLUSTRATIVE PLAN OF VARIOUS CMU WALL CONDITIONS

NTS

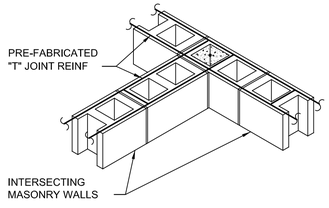

AA WALL INTERSECTION

BB WALL INTERSECTION

A S0.4 TYPICAL CMU DETAILS

SCALE: NTS

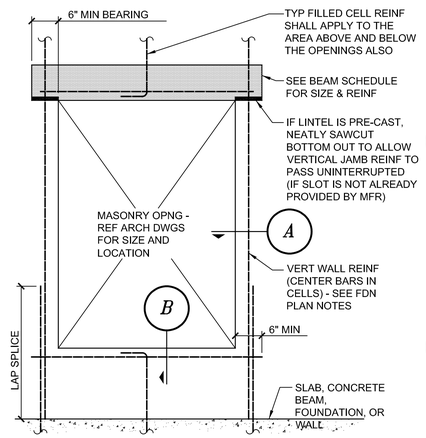

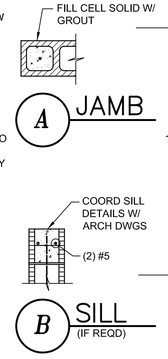

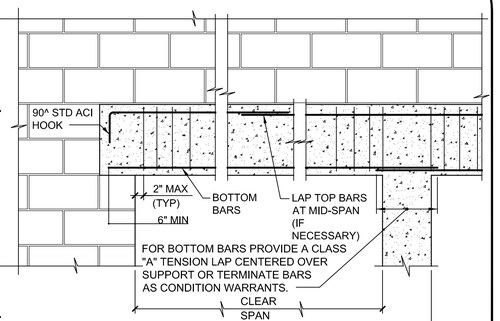

NOTES:

1. PLACEMENT OF REINF TO BE PER ACI 318.

B S0.4 TYPICAL CMU OPENING ELEVATION

SCALE: NTS

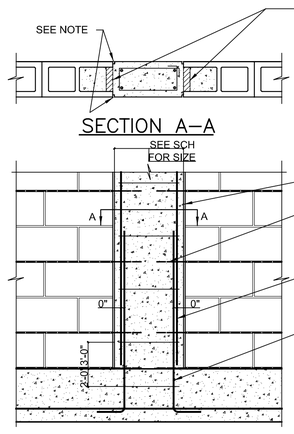

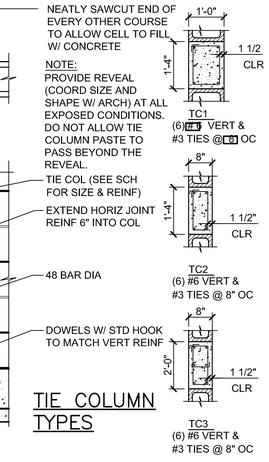

TIE COLUMN TYPES

C S0.4 DETAIL TIE COLUMN

SCALE: NTS

MASONRY COLUMN SCHEDULE

MARK	SIZE	REINFORCING	REMARKS
MC1	12"x16"	(2) #7 & #3 @16" OC. SINGLE LEG TIE	OR USE 2 CMU V. CELLS
MC2	8"x24"	(3) #7 & #3 @16" OC. SINGLE LEG TIE	OR USE 3 CMU V. CELLS
MC3	24"x24"	(4) #5 & #3 @16" OC.	OR CAN BE AS PLANS

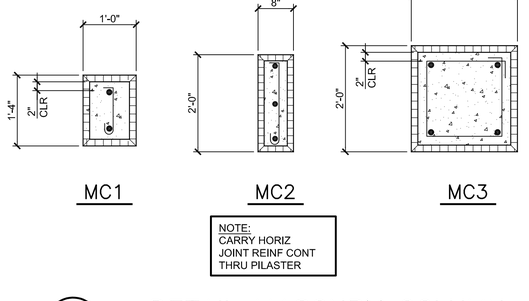

NOTE:
CARRY HORIZ JOINT REINF CONT THRU PILASTER

D S0.4 DETAIL MASONRY COLUMN

SCALE: NTS

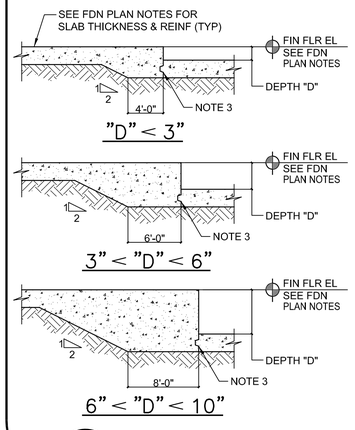

NOTES:

1. SEE FDN PLAN FOR LOCATIONS AND SLAB REINF.
2. COORD DEPRESSIONS W/ ARCH DWGS & DRAINS W/ PLUMBING DWGS.
3. 1x2 NOMINAL KEYWAY MAY BE DELETED IF SLAB IS CAST MONOLITHIC AT STEP.

E S0.4 DETAILS AT SLAB–ON–GRADE FLR DEPRESSION

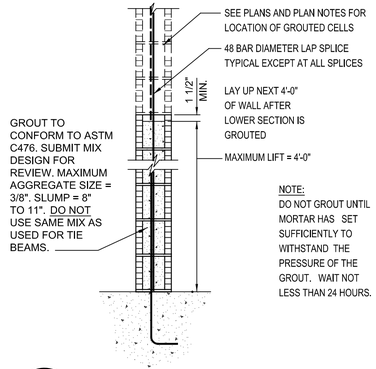

F S0.4 DETAIL LOW LIFT GROUTING

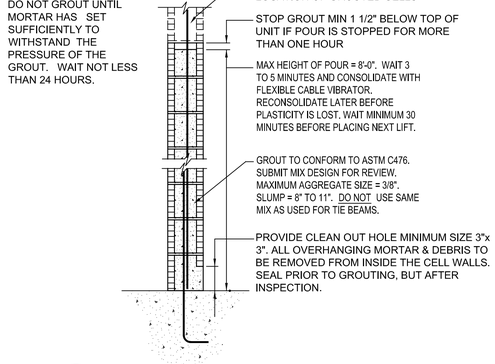

G S0.4 DETAIL HIGH LIFT GROUTING

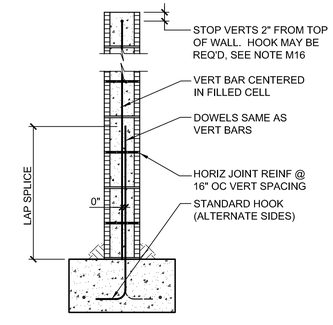

H S0.4 TYPICAL FILLED CELL DETAILS

HALL & OGLE ARCHITECTS, INC.
208 MAGNOLIA AVENUE
DAYTONA BEACH, FLORIDA 32114
PH: (386) 255-6163
FAX: (386)257-5650
AA-C000925
www.hoarchitects.com

SEAL

REVISIONS

NO.	DATE	DESCRIPTION

Replacement Fire Station # 96
City of Holly Hill, Fl.
1020 Daytona Avenue
Holly Hill , Florida

ARCHENGR OF RECORD
ASHRAF ELBAHY, PHD, PE, SE,SI
FL PE NO. 52616

DESIGNED BY	DRAWN BY
AB	JEB
ISSUE DATE	AE PROJECT NUMBER
18-MAY-2023	2204

SHEET TITLE
TYPICAL DETAILS

DRAWING NO.
S0.3

AB CONSULTING ENGINEERS
CA # 27094
301 Trieste Dr.
Orlando, FL 32807
Tel: 407-275-3050
Fax: 407-275-5779
E-mail: ab@abengs.com
ASHRAF ELBAHY, PhD, PE
FLORIDA PE # 52616

Attachment: Exhibit C - Fire Station #96 Bid Set (2023-R-55 : Fire Station Construction)

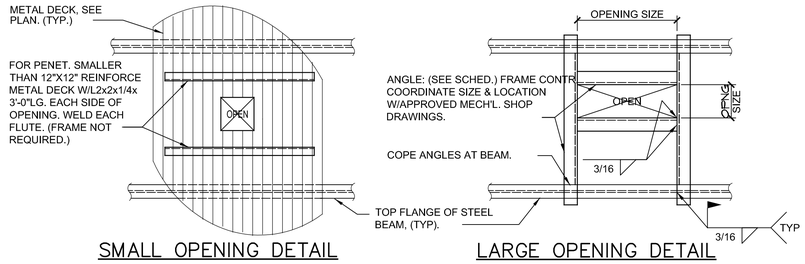

SMALL OPENING DETAIL

LARGE OPENING DETAIL

NOTE:
CONTRACTOR TO PROVIDE TEMP. GUARD RAIL AROUND OPENING DURING CONSTRUCTION.

ROOF TOP UNIT FRAME SCHEDULE

UNIT WEIGHT	ANGLE SIZE
0 - 675 LBS	L4x3x1/4 (L.L.H.)
676 - 1500 LBS.	L4x4x5/16
1501 - 3000 LBS.	L6x3x3/8 (L.L.H.)
3001 - 6000 LBS.	L6x6x3/8

A S0.4 DETAIL (MTL DECK OPENINGS)

NTS

NOTE:
* - 3" DIMENSION TYP. EXCEPT AS RECOMMENDED BY AISC FOR LARGER MEMBERS.

STANDARD MIN. STEEL CONNECTIONS SCHEDULE

BEAM DEPTH	MIN. ROWS OF BOLTS	MIN. PLATE/ ANGLE THICKNESS	MIN. PLATE/ ANGLE LENGTH
8, 10	2	5/16"	5 1/2"
12, 15	3	5/16"	8 1/2"
16, 18	4	3/8"	11 1/2"
21, 24	5	1/2"	14 1/2"

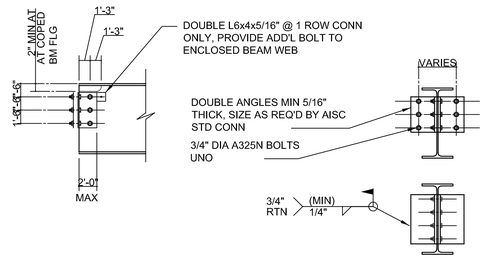

B S0.4 DETAIL (STEEL CONNECTION)

SCALE: NTS

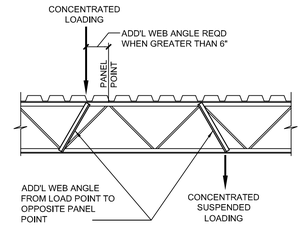

C S0.4 DETAIL (AT CONCENTRATED LOADS)

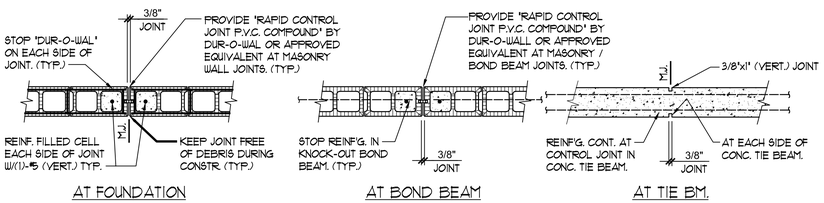

SPACING FOR CONTROL JOINT
3 x HEIGHT = SPACING IN FEET (NOT TO EXCEED 30'-0")

D S0.4 DETAIL (MASONRY CONTROL JOINT)

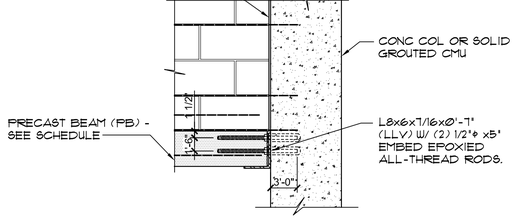

E S0.4 PRE-CAST LINTEL SUPPORT

HALL & OGLE ARCHITECTS, INC.
208 MAGNOLIA AVENUE
DAYTONA BEACH, FLORIDA 32114
www.hoarchitects.com
PH: (386) 255-6163
FAX: (386)257-5650
AA-C000925

SEAL

REVISIONS

NO.	DATE	DESCRIPTION

DOCUMENT HISTORY:

Replacement Fire Station # 96
City of Holly Hill, Fl.
1020 Daytona Avenue
Holly Hill , Florida

ARCHITECT OF RECORD
ASHRAF ELBAHY, PHD, PE, SE,SI
FL PE NO. 52616

DESIGNED BY	DRAWN BY
AB	JEB
ISSUE DATE	AE PROJECT NUMBER
18-MAY-2023	2204

SHEET TITLE
TYPICAL DETAILS

DRAWING NO.
S0.4

CONSULTING ENGINEERS
CA # 27084
101 Trails Dr
Orlando, FL 32807
Tel: 407-275-0280
Fax: 407-275-0779
E-mail: ab@abengs.com
ASHRAF ELBAHY, PhD, PE
FLORIDA PE # 52616

Attachment: Exhibit C - Fire Station #96 Bid Set (2023-R-55 : Fire Station Construction)

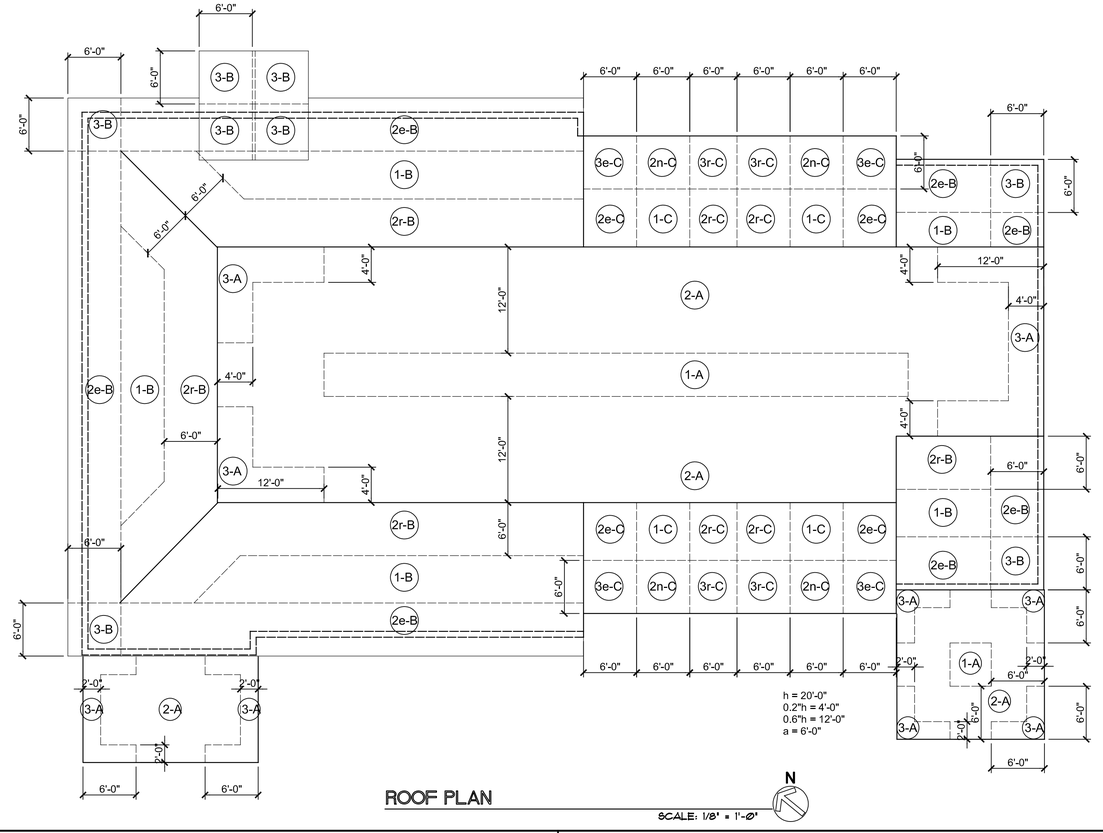

ROOF PLAN

SCALE: 1/8" = 1'-0"

COMPONENETS AND CLADDING ULTIMATE WIND PRESSURES: FLAT ROOF (ZONE A)

TRIBUTARY AREA	ZONE 1-A		ZONE 2-A		ZONE 3-A	
	SUCTION (-)	PRESSURE (+)	SUCTION (-)	PRESSURE (+)	SUCTION (-)	PRESSURE (+)
10 SQ FT OR LESS	122.52	46.28	155.18	46.28	204.20	46.28
20 SQ FT OR LESS	115.77	44.65	146.50	44.65	186.83	44.65
50 SQ FT OR LESS	106.83	42.48	135.02	42.48	163.87	42.48
100 SQ FT OR LESS	100.08	40.83	126.33	40.83	146.50	40.83
200 SQ FT OR LESS	93.33	40.83	117.67	40.83	129.13	40.83
500 SQ FT OR LESS	84.40	40.83	106.18	40.83	106.18	40.83

COMPONENETS AND CLADDING ULTIMATE WIND PRESSURES: HIPPED ROOF (ZONE B)

TRIBUTARY AREA	ZONE 1-B		ZONE 2e-B		ZONE 2r-B		ZONE 3-B	
	SUCTION (-)	PRESSURE (+)	SUCTION (-)	PRESSURE (+)	SUCTION (-)	PRESSURE (+)	SUCTION (-)	PRESSURE (+)
10 SQ FT OR LESS	111.48	71.46	145.78	71.46	145.78	71.46	145.78	71.46
20 SQ FT OR LESS	101.15	64.58	132.55	64.58	132.55	64.58	132.55	64.58
50 SQ FT OR LESS	87.50	55.48	115.06	55.48	115.06	55.48	115.06	55.48
100 SQ FT OR LESS	77.18	48.59	101.84	48.59	101.84	48.59	101.84	48.59
200 SQ FT OR LESS	77.18	48.59	88.61	48.59	88.61	48.59	88.61	48.59
500 SQ FT OR LESS	77.18	48.59	88.61	48.59	88.61	48.59	88.61	48.59

COMPONENETS AND CLADDING ULTIMATE WIND PRESSURES: GABLE ROOF (ZONE C)

TRIBUTARY AREA	ZONE 1-C		ZONE 2e-C		ZONE 2n-C		ZONE 2r-C		ZONE 3e-C		ZONE 3r-C	
	SUCTION (-)	PRESSURE (+)	SUCTION (-)	PRESSURE (+)	SUCTION (-)	PRESSURE (+)	SUCTION (-)	PRESSURE (+)	SUCTION (-)	PRESSURE (+)	SUCTION (-)	PRESSURE (+)
10 SQ FT OR LESS	116.21	61.53	116.21	61.53	172.90	61.53	172.90	61.53	172.90	61.53	198.24	61.53
20 SQ FT OR LESS	116.21	57.51	116.21	57.51	154.04	57.51	154.04	57.51	154.04	57.51	170.23	57.51
50 SQ FT OR LESS	102.78	52.20	102.78	52.20	129.10	52.20	129.10	52.20	129.10	52.20	133.22	52.20
100 SQ FT OR LESS	92.63	48.18	92.63	48.18	110.24	48.18	110.24	48.18	110.24	48.18	133.22	48.18
200 SQ FT OR LESS	82.47	48.18	82.47	48.18	99.20	48.18	99.20	48.18	99.20	48.18	133.22	48.18
500 SQ FT OR LESS	76.53	48.18	76.53	48.18	99.20	48.18	99.20	48.18	99.20	48.18	133.22	48.18

COMPONENETS AND CLADDING ULTIMATE WIND PRESSURES: WALL

TRIBUTARY AREA	ZONE 4		ZONE 5	
	SUCTION (-)	PRESSURE (+)	SUCTION (-)	PRESSURE (+)
10 SQ FT OR LESS	98.56	87.84	110.51	87.84
20 SQ FT OR LESS	93.35	84.83	104.48	84.83
50 SQ FT OR LESS	86.51	80.85	96.52	80.85
100 SQ FT OR LESS	83.50	77.83	90.50	77.83
200 SQ FT OR LESS	80.49	74.82	84.47	74.82
500 SQ FT OR LESS	76.51	70.84	76.51	70.84

HALL & OGLE
ARCHITECTS, INC.
208 MAGNOLIA AVENUE
DAYTONA BEACH, FLORIDA 32114
www.hoarchitects.com
PH (386) 255-5163
FAX (386)257-5650
AA-C000925

SEAL

REVISIONS

NO.	DATE	DESCRIPTION

DOCUMENT HISTORY:

Replacement Fire Station # 96
City of Holly Hill, Fl.
1020 Daytona Avenue
Holly Hill , Florida

CONSULTING ENGINEERS
C/A # 27084
301 Thalia Dr.
Orlando, FL 32807
Tel: 407-275-3050
Fax: 407-275-0779
E-mail: ab@abengs.com
ASHRAF ELBAHY, PhD, PE
FLORIDA PE # 52616

ARCHI/ENGR OF RECORD
ASHRAF ELBAHY, PHD, PE, SE,SI
FL PE NO. 52616

DESIGNED BY	DRAWN BY
AB	JEB
ISSUE DATE	AE PROJECT NUMBER
18-MAY-2023	2204

SHEET TITLE: WIND SCHEDULE

DRAWING NO.: S0.5

Attachment: Exhibit C - Fire Station #96 Bid Set (2023-R-55 : Fire Station Construction)

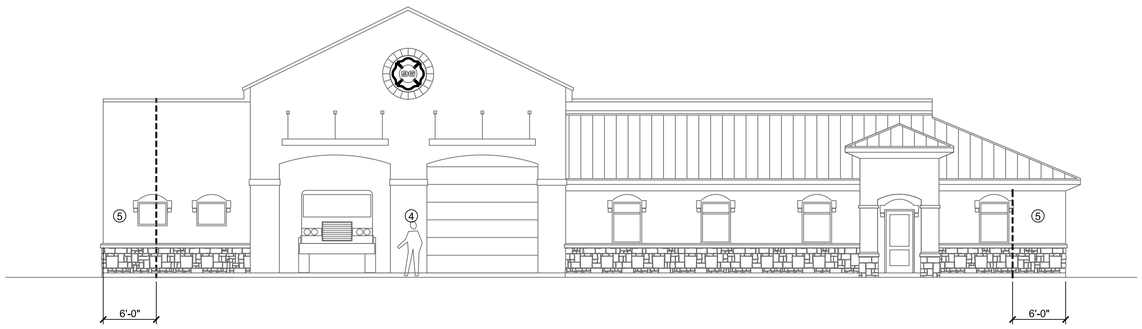

EAST ELEVATION

SCALE: 1/8" = 1'-0"

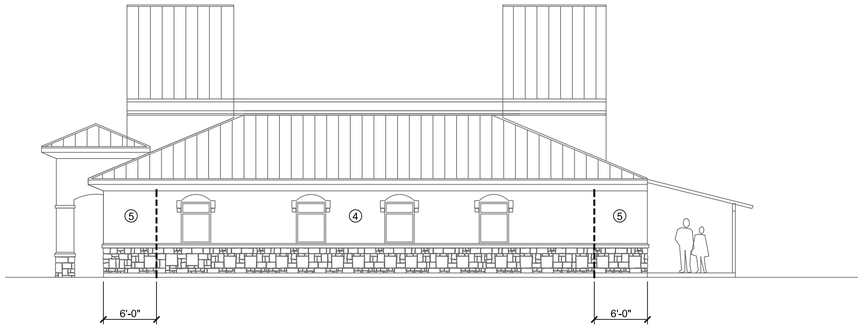

NORTH ELEVATION

SCALE: 1/8" = 1'-0"

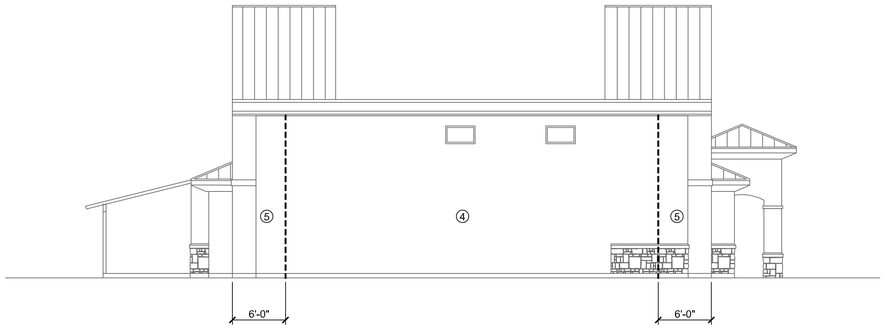

SOUTH ELEVATION

SCALE: 1/8" = 1'-0"

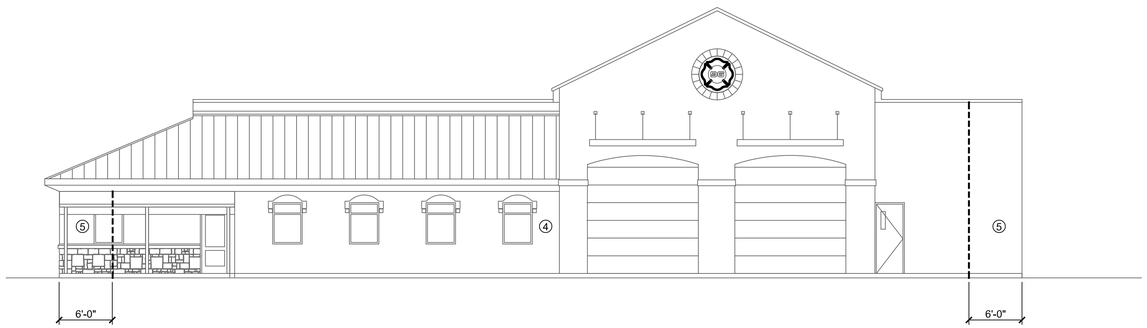

WEST ELEVATION

SCALE: 1/8" = 1'-0"

HALL & OGLE
ARCHITECTS, INC.
208 MAGNOLIA AVENUE
DAYTONA BEACH, FLORIDA 32114
www.hoarchitects.com
PH (386) 255-5163
FAX (386)257-5650
AA-C000925

SEAL

REVISIONS

NO.	DATE	DESCRIPTION

DOCUMENT HISTORY:

Replacement Fire Station # 96
City of Holly Hill, Fl.
1020 Daytona Avenue
Holly Hill , Florida

CONSULTING ENGINEERS
GA # 27084
301 Trieste Dr
Orlando, FL 32807
Tel: 407-275-3050
Fax: 407-275-5779
E-mail: ab@abengs.com

ASHRAF ELBAHY, PhD, PE
FLORIDA PE # 52616

ARCHENGR OF RECORD
ASHRAF ELBAHY, PHD, PE, SE,SI
FL PE NO. 52616

DESIGNED BY	DRAWN BY
AB	JEB
ISSUE DATE	AE PROJECT NUMBER
18-MAY-2023	2204

SHEET TITLE

WIND/WALL SCHEDULE

DRAWING NO.

S0.6

Attachment: Exhibit C - Fire Station #96 Bid Set (2023-R-55 : Fire Station Construction)

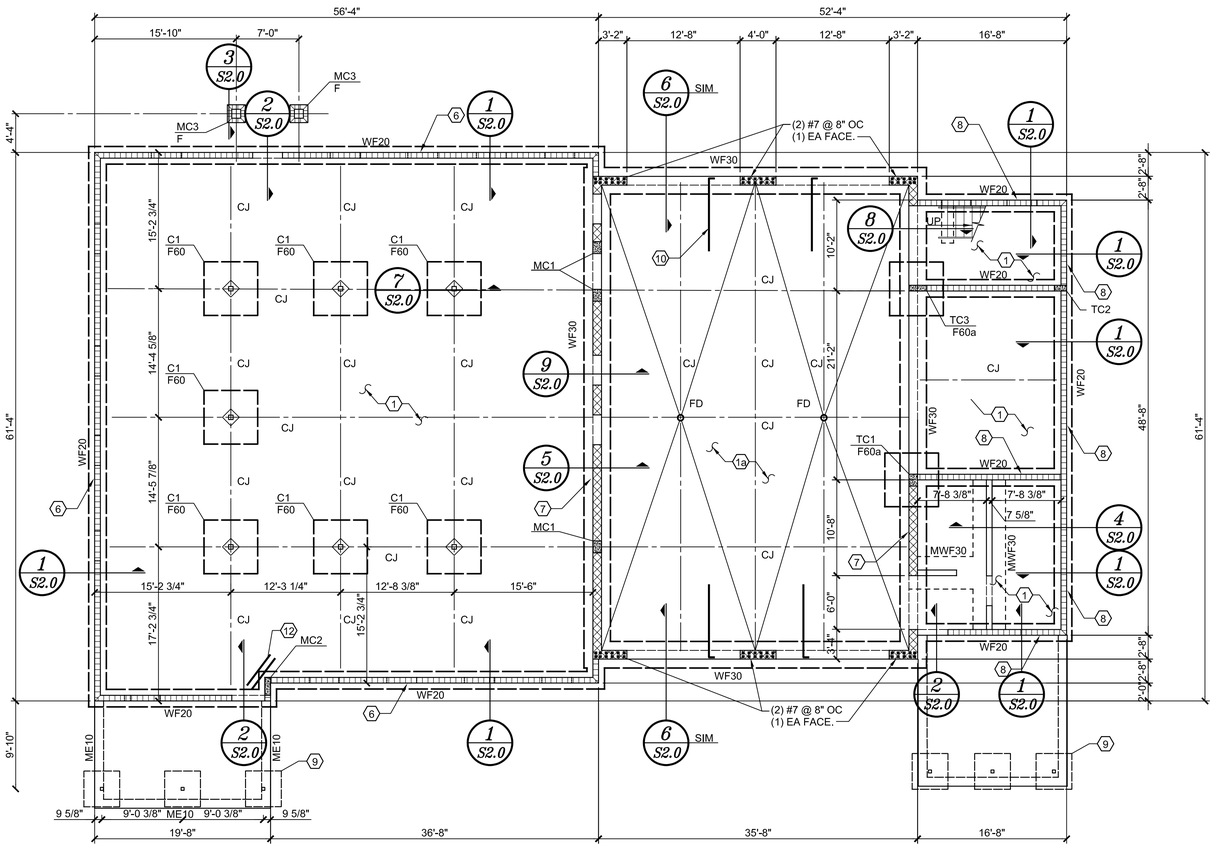

FOUNDATION PLAN

SCALE: 1/8" = 1'-0"

FLOOR FRAMING PLAN NOTES:

1. FLOOR SLAB SHALL BE 4" THICK CONCRETE REINF W/ 6x6-W2.1xW2.1 WWF OVER 10 MIL VAPOR BARRIER ON COMPACTED SUBGRADE. SEE "SLAB-ON-GRADE DETAILS" ON SHEET S0.2 FOR PLACEMENT OF REINF.

   FIBER-REINFORCED CONCRETE IS AN ACCEPTABLE ALTERNATIVE TO WELDED-WIRE FABRIC. REINFORCED CONCRETE FIBERS SHALL BE 100% VIRGIN POLYPROPYLENE FIBRILLATED FIBERS AS MANUFACTURED BY FIBER MESH CO. (OR APPROVED EQUAL) APPLIED AT A RATE OF 1 1/2 lbs/CY (ONLY FOR 4" SOG).

1a. APPARATUS BAY FLOOR SLAB SHALL BE 6" THICK CONCRETE REINF W/ #4 @ 8" OC EA WAY OVER 10 MIL VAPOR BARRIER ON COMPACTED SUBGRADE. SEE "SLAB-ON-GRADE DETAILS" ON SHEET S0.2 FOR PLACEMENT OF REINF.

2. T/ SLAB EL =0'-0" (TYP, UNO). REFERENCE ONLY. MATCH EXISTING. SEE CIVIL/ARCH'L DWGS FOR ACTUAL ELEVATION.

3. T/ COL FTG EL = -1'-4"

4. ALL FTGS ARE CENTERED BENEATH COLUMNS & BEARING WALLS (TYP, UNO).

5. MAINTAIN STRUCTURAL SLAB THICKNESS AT ALL FLOOR SLOPES AND DEPRESSIONS.

6. REINF 8" LOAD-BEARING CMU WALLS W/ #5 VERT BAR CENTERED IN GROUT-FILLED CELL AT ENDS, CORNERS, AND AT MAX SPACING OF 24" OC. FOR REINF OF NON-LOAD-BEARING INTERIOR CMU WALLS, SEE SECTION 4/S2.0. ALL ADDITIONAL REQUIRED FILLED CELLS (i.e. GIRDER LOCATIONS, JAMBS) ARE SHOWN THUS "■" ON EA STRUCTURAL PLAN. SEE "ILLUSTRATIVE PLAN OF VARIOUS CMU WALL CONDITIONS" ON SHEET S0.3 FOR ADDITIONAL INFO.

7. REINF 12" LOAD-BEARING CMU WALLS W/ #6 VERT BAR CENTERED IN GROUT-FILLED CELL AT ENDS, CORNERS, AND AT MAX SPACING OF 24" OC.

8. REINF 8" LOAD-BEARING CMU WALLS W/ #5 VERT BAR CENTERED IN GROUT-FILLED CELL AT ENDS, CORNERS, AND AT MAX SPACING OF 16" OC.

9. ALUMINUM PORCH/CANOPY AND IT'S FOOTINGS BY FL REG. SPECIALITY ENGINEER. CONTRACTOR TO COORD. FOOTINGS SIZE AND REINF. W/ SPECIALTY ENG. DESIGN & SHOP DWGS.

10. #4x8'-0" LONG TOP BARS @ 8" OC WITH ACI STD 90 DEGREE HOOK . PROVIDE 1 ½" CLEAR T/SLAB

11. GENERATOR PAD SHALL BE 12" THICK RENF W/ #4 @ 12" OC EW T & B

12. 2-#4X4'-0" LONG @3" OC PLACED 2" CLR FROM CORNER, CENTERED IN SLAB TYP.

COLUMN & BASE PLATE SCHEDULE

MARK	SIZE	BASE PLATE SIZE (INCHES) A	B	T	ANCHOR BOLT (INCHES) E (NOTE 2)	d	CAP PLATE THICKNESS (INCHES)	COMMENTS
C1	HSS4x4x1/2	12	12	3/4	12	3/4	1/4	

NOTES:
1. ANCHOR BOLTS SHALL BE ASTM FI554 (GRADE 36) UNO, THREADED EACH END W/ NUT AT BOTTOM, TACK-WELDED SECURE. PLATE WASHER AT BOTTOM NUT IS NOT REQ'D. CONFORM TO CHART AT RIGHT FOR EMBEDMENT UNLESS NOTED OTHERWISE IN SCHEDULE ABOVE.
2. MAX EMBEDMENT "E" = (FTG THICKNESS) - 12".
3. PLATE WASHERS SHALL HAVE HOLE W/ DIAMETER EQUAL TO BOLT DIAMETER + 1/16".

BOLT TYPE, TYPE MATL	MIN EMBEDDED LENGTH	MIN EMBEDDED EDGE DISTANCE
ASTM FI554 (GRADE 36)	12d	5d **4"**

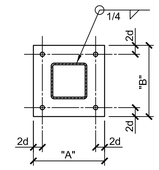

BASE PLATE DETAIL
NOT TO SCALE

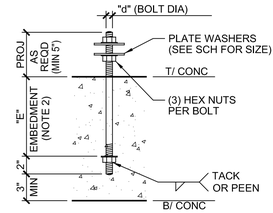

ANCHOR BOLT DETAIL
NOT TO SCALE

FOUNDATION SCHEDULE

MARK	SIZE (L x W x D)	REINFORCING	REMARKS
F60	6'-0" x 6'-0" x 3'-4"	(12) #6 EA WAY, TOP & BOT	PAD FOOTING
F60a	6'-0" x 6'-0" x 2'-0"	(8) #6 EA WAY, BOT	PAD FOOTING
WF20	CONT x 2'-0" x 1'-0"	(3) #5 CONT, #5@ 12 TRANSV BOT	WALL FOOTING
WF30	CONT x 3'-0" x 1'-0"	(4) #5 CONT, #5 @ 12 TRANSV BOT	WALL FOOTING
ME10	CONT x 1'-0" x 1'-0"	(2) #5 CONT, #4 @ 24 TRANSV	MONOLITHIC EDGE
MWF30	CONT x 3'-0" x 0'-6"	(2) #5 CONT, #4 @ 24 TRANSV	MONOLITHIC WALL FTG

NOTE TO GC:
1. LOCATION OF MASONRY CONTROL JOINTS (MCJ) SHALL BE COORDINATED WITH ARCHITECTURAL DRAWINGS AND HALL NOT EXCEED THE REQUIREMENTS OUTLINES IN THE TYP. DETAIL. SUBMIT MCJ PLAN TO ARCHITECT FOR APPROVAL
2. NO CONSTRUCTION JOINTS IN THE APPARATUS BAYS. THE APPARATUS BAY SHALL BE POURED SAME DAY SAME POUR.
3. VERIFY STEEL COLUMN DIMENSIONS / LOCATIONS. PLACE THE COL IN ALIGNMENT W/ 4" LGM STUDS.

NOTE :
ALL EXPOSED STRUCTURAL STEEL COLUMNS, BEAMS, BRACES, TUBES, PLATES, EMBED PLATES, CONN. .. ETC. SHALL BE HOT DIPPED GALVANIZED.

HALL & OGLE ARCHITECTS, INC.
208 MAGNOLIA AVENUE
DAYTONA BEACH, FLORIDA 32114
PH:(386) 255-6163
FAX:(386)257-5650
AA-C000925
www.hoarchitects.com

SEAL

REVISIONS

NO.	DATE	DESCRIPTION

DOCUMENT HISTORY

Replacement Fire Station # 96
City of Holly Hill, Fl.
1020 Daytona Avenue
Holly Hill , Florida

CONSULTING ENGINEERS
AB
CA # 27364
301 Trusta Dr.
Orlando, FL 32803
Tel 407-275-3050
Fax 407-275-5779
E-mail: ab@abengs.com
ASHRAF ELBAHY, PHD, PE
FLORIDA PE # 52616

ARCHENGR OF RECORD
ASHRAF ELBAHY, PHD, PE, SE,SI
FL PE NO. 52616

DESIGNED BY	DRAWN BY
AB	JEB
ISSUE DATE	AE PROJECT NUMBER
18-MAY-2023	2204

SHEET TITLE
FOUNDATION PLAN

DRAWING NO.
S1.0

Attachment: Exhibit C - Fire Station #96 Bid Set (2023-R-55 : Fire Station Construction)

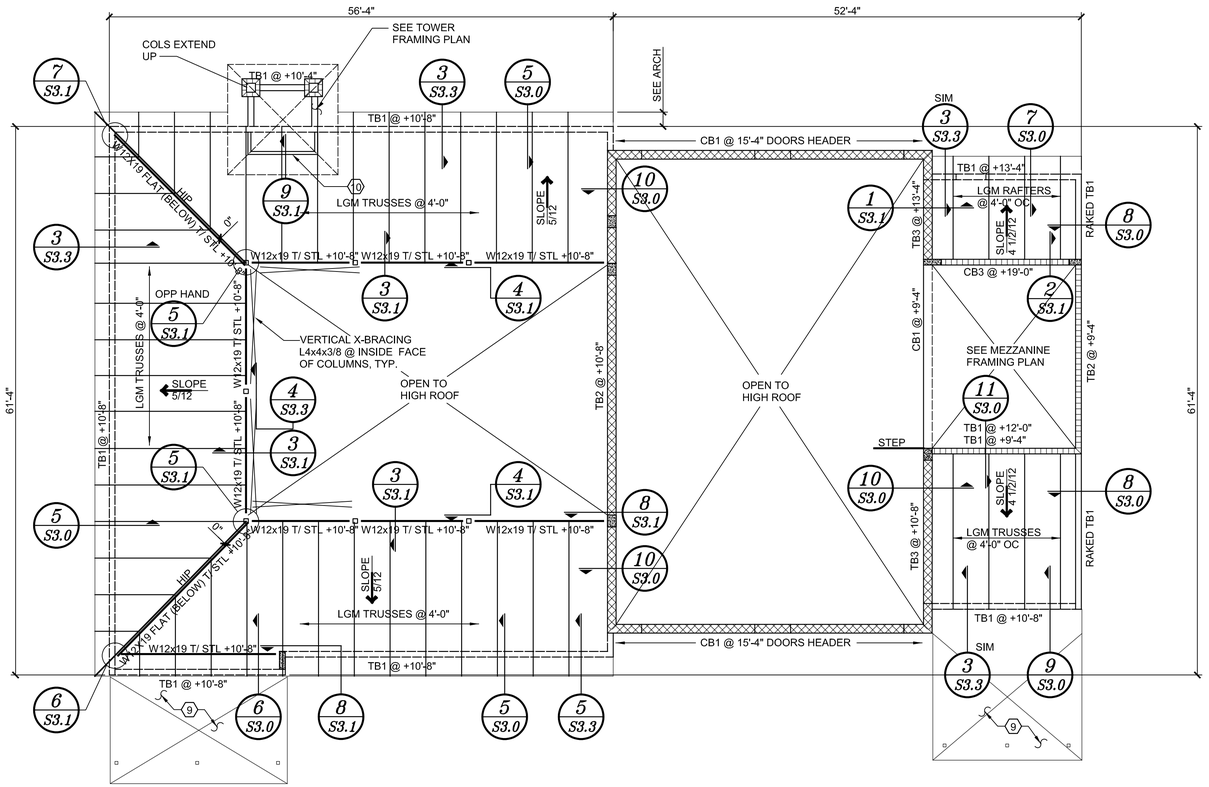

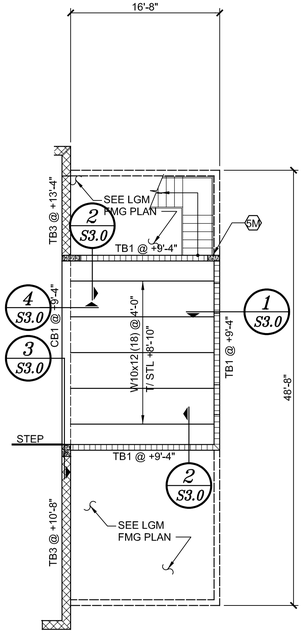

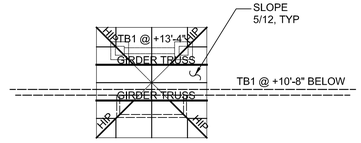

TOWER FRAMING PLAN

SCALE: 1/8" = 1'-0"

LGM TRUSS/STEEL FRAMING PLAN

SCALE: 1/8" = 1'-0"

MEZZANINE FRAMING PLAN

SCALE: 1/8" = 1'-0"

BEAM SCHEDULE

MARK	TYPE	NOMINAL SIZE (W"xD")	REINFORCING			STIRRUPS		COMMENTS
			BOT	MID	TOP	SIZE	SPACING	
BB1	5	12x8	--	(2) #5	--	--	--	ADJUST DEPTH AS REQ'D TO FIT COURSING.
TB1	1	8x16	(2) #5	--	(2) #5	#3	8"	ADJUST DEPTH AS REQ'D TO FIT COURSING.
TB2	2	8x24	(2) #5	(2) #5	(2) #5	#3	8"	
TB3	3	12x16	(3) #6	--	(3) #6	#3	8"	
CB1	4	12x16	(4) #8	--	(4) #8	#3	6"	
CB2	4	12x24	(4) #8	(2) #6	(4) #8	#3	8"	
CB3	2	8x36	(3) #7	(1) #5 EF @ 12" OC	(3) #7	#3	8"	

TYPES

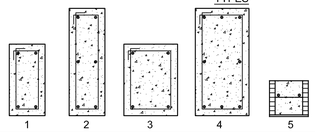

NOTES:
"CB" = CONCRETE BEAM (FORMED, SHORED AND POURED)
"TB" = TIE BEAM (FORMED AND POURED)

TRUSS ROOF FRAMING PLAN NOTES:

1. ALL LIGHT GAGE METAL TRUSSES SHALL BE DESIGNED AND CERTIFIED BY TRUSS MANUFACTURER'S FL. REGISTERED ENGINEER. ALL TRUSS-TO-TRUSS, TRUSS TO SUPPORT, & TRUSS TO BEARING CONNECTIONS SHALL BE DESIGNED AND SPECIFIED BY THE TRUSS MANUFACTURER.
2. TRUSS MANUFACTURER SHALL VERIFY ALL DIMENSIONS AND SUBMIT SHOP DRAWINGS TO ARCHITECT FOR APPROVAL.
3. SEE ARCHITECTURAL BUILDING SECTIONS, STRUCTURAL FRAMING PLANS AND TRUSS ELEVATIONS FOR ROOF PITCHES (TYP).
4. TRUSS SPACING SHALL BE MAX 4'-0" OC (UNO).
5. SEE ARCHITECTURAL BUILDING SECTIONS, WALL SECTIONS AND STRUCTURAL FRAMING PLAN(S) FOR BEARING HEIGHTS.
6. REFER TO ARCHITECTURAL DRAWINGS FOR FRAMED-DOWN CEILINGS, VOLUME CEILINGS AND OTHER INTERIOR TREATMENTS.
7. SEE PRE-FABRICATED COLD FORMED STEEL TRUSS NOTES FOR BRIDGING REQUIREMENTS FOR METAL TRUSSES.
8. ROOFING ON 1 1/2"- 22ga TYPE "B" GALV G90 METAL DECK SECURED W/ #12 TEK SCREWS AT SUPPORTS AND #10 TEK SCREWS AT SIDELAPS ON OPEN WEB BAR JOISTS, LT GA TRUSSES AND/OR STRUCTURAL STEEL MEMBERS. PROVIDE A 36/7 PATTERN AT SUPPORTS W/ SPACING AT EXTREME SIDES OF 6" OC. (6) SCREWS PER SPAN SHALL BE PROVIDED AT SIDELAPS.
9. ALUMINUM CANOPY FRAMING BY OTHERS.
10. LGM MTL STUD WALL UP FROM ROOF DECK.
11. AT ALL HIPS, VALLEYS & RIDGES, PROVIDE CONT MIN 6X6X18ga BENT PL. ALSO PROVIDE BLOCKING AT HIPS & VALLEYS TO SUPPORT DISCONTINUOUS ENDS OF THE METAL DECK WHERE NO TRUSSES EXIST. TRUSS SUBMITTAL SHALL CLEARLY SHOW THE BLOCKING ON THE FRAMING PLAN.

MEZZANINE FLOOR FRAMING PLAN NOTES:

1M. FLOOR SLAB SHALL BE 6" (TOTAL DEPTH) CONC SLAB REINF W/ 6x6x2.1x2.1 WWF ON 3"- 20ga GALV FORM/COMPOSITE MTL DECK, (3) SPAN MIN.
NOTE: IF (3) SPAN CONFIGURATION CANNOT BE ACCOMMODATED, 18 ga GALV MTL DECK MUST BE USED.

2M. T/ SLAB EL = +9'-4"

3M. T/ STEEL EL = +8'-10"

4M. ELECTRICAL AND MECHANICAL CONDUIT WILL NOT BE PERMITTED TO RUN HORIZONTAL IN THE SLAB. ANY AND ALL CONDUIT MUST BE RUN BENEATH THE SLAB AND STUBBED UP THROUGH THE SLAB.

5M. STAIR CONNECTION TO STRUCTURE BY SPECIALTY ENG.

6M. (#) SHOWN BY STL BEAM CALLOUT ON PLAN INDICATES NUMBER OF 3/4" DIAM. X 4.5" LONG HEADED STUDS UNIFORMLY DISTRIBUTED.

7M. FLOOR DESIGN LOADS: DL = 60 PSF LL = 100 PSF

NOTE TO GC:
ALL TEMPORARY AND PERMANENT BRACING FOR THE TRUSS SYSTEM SHALL BE DESIGNED BY A SPECIALTY ENGINEER. PROVIDE SIGNED AND SEALED SHOP DRAWINGS FOR REVIEW AND APPROVAL.

NOTE :
ALL EXPOSED STRUCTURAL STEEL COLUMNS, BEAMS, BRACES, TUBES, PLATES, EMBED PLATES, CONN. .. ETC. SHALL BE HOT DIPPED GALVANIZED.

HALL & OGLE ARCHITECTS, INC.
208 MAGNOLIA AVENUE
DAYTONA BEACH, FLORIDA 32114
PH.(386) 255-6163
FAX.(386)257-5650
AA-C000925
www.hoarchitects.com

SEAL

REVISIONS

NO.	DATE	DESCRIPTION

Replacement Fire Station # 96
City of Holly Hill, Fl.
1020 Daytona Avenue
Holly Hill , Florida

CONSULTING ENGINEERS
CA # 27084
301 Trails Dr.,
Orlando, FL 32807
Tel 407-275-3050
Fax 407-275-5779
E-mail: ab@ablengs.com

ASHRAF ELBAHY, PhD, PE
FLORIDA PE # 52616

ARCHENGR OF RECORD
ASHRAF ELBAHY, PHD, PE, SE,SI
FL PE NO. 52616

DESIGNED BY	DRAWN BY
AB	JEB
ISSUE DATE	AE PROJECT NUMBER
18-MAY-2023	2204

SHEET TITLE
FRAMING PLANS

DRAWING NO.
S1.1

Attachment: Exhibit C - Fire Station #96 Bid Set (2023-R-55 : Fire Station Construction)

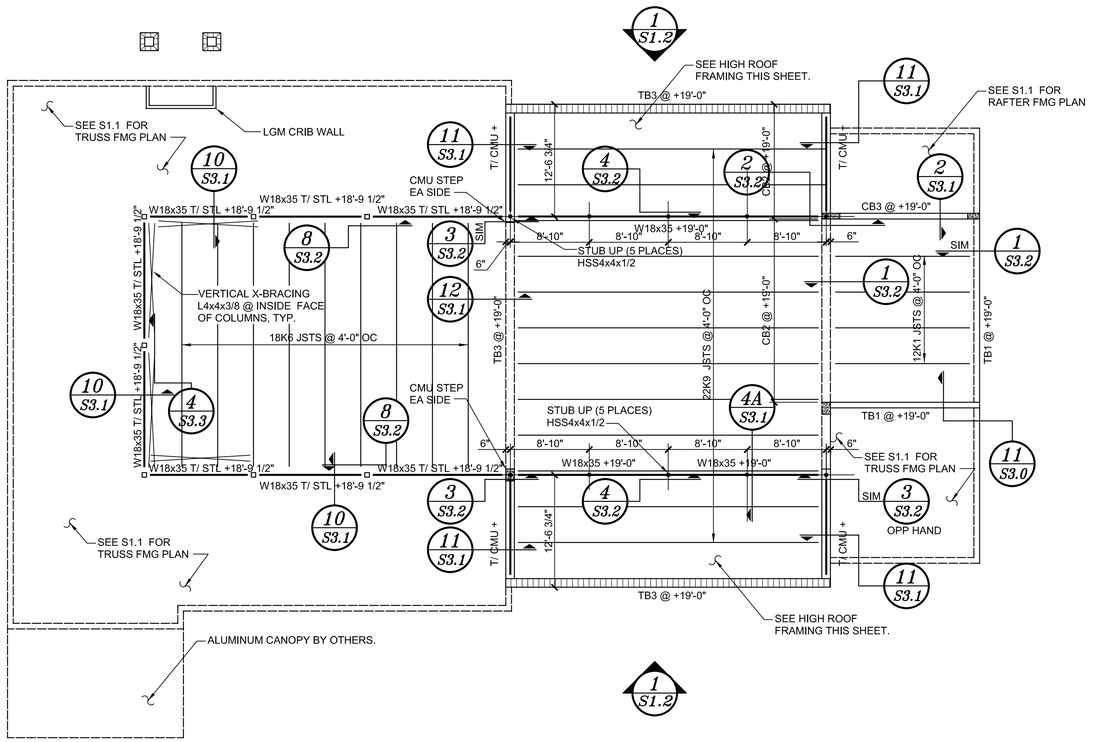

1 S1.2

ROOF STEEL FRAMING PLAN

SCALE: 1/8" = 1'-0"

ROOF FRAMING PLAN NOTES:

1. ROOFING ON 1 1/2"- 22ga TYPE "B" GALV G90 METAL DECK SECURED W/ #12 TEK SCREWS AT SUPPORTS AND #10 TEK SCREWS AT SIDELAPS ON OPEN WEB BAR JOISTS, LT GA TRUSSES AND/OR STRUCTURAL STEEL MEMBERS. PROVIDE A 36/7 PATTERN AT SUPPORTS W/ SPACING AT EXTREME SIDES OF 6" OC. (6) SCREWS PER SPAN SHALL BE PROVIDED AT SIDELAPS.
2. ROOFING ON 1 1/2"-22 ga TYPE "B" GALV G90 METAL DECK SECURED W/ #12 TEK SCREWS AT SUPPORTS AND #10 TEK SCREWS AT SIDELAPS ON LIGHT GAGE METAL MEMBERS. PROVIDE A 36/7 PATTERN AT SUPPORTS W/ SPACING AT EXTREME SIDES OF 6" OC. (6) SCREWS PER SPAN SHALL BE PROVIDE AT SIDELAPS.
3. SEE STRUCTURAL GENERAL NOTES FOR BRIDGING REQUIREMENTS FOR OPEN-WEB STEEL JOISTS.
4. JOISTS DESIGNATED "KCS" (K-SERIES CONSTANT SHEAR PER "VULCRAFT" TABLES) SHALL BE UTILIZED (IF REQ'D) AT CONCENTRATED LOADS (SEE FRAMING PLAN).
5. SEE FRAMING PLAN FOR JOIST BEARING ELEVATIONS.
6. REF ARCH DWGS FOR INTERIOR DRAINS, SCUPPERS, CRICKETS AND SCUTTLES.
7. "BTJ" INDICATES BOLTED TIE JOIST PER OSHA REQUIREMENTS (TYP). SEE GENERAL NOTE SJ12 FOR ADDITIONAL INFORMATION.
8. COORDINATE SIZE AND LOCATION OF ROOFTOP UNITS/FANS WITH MECHANICAL DWGS.

NOTE :
ALL EXPOSED STRUCTURAL STEEL COLUMNS, BEAMS, BRACES, TUBES, PLATES, EMBED PLATES, CONN. .. ETC. SHALL BE HOT DIPPED GALVANIZED.

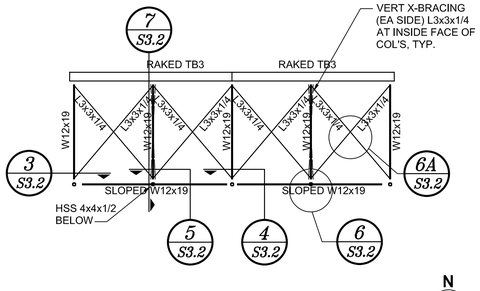

HIGH ROOF STEEL FRAMING PLAN

SCALE: 1/8" = 1'-0"

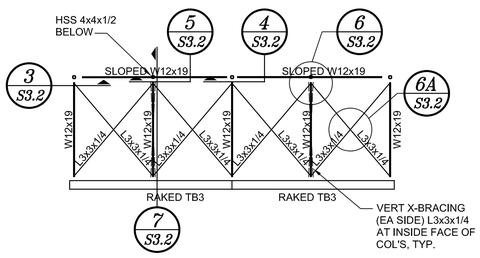

HIGH ROOF STEEL FRAMING PLAN

SCALE: 1/8" = 1'-0"

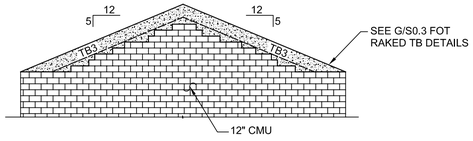

RAKED TB3 ELEVATION

SCALE: 1/8" = 1'-0"

HALL & OGLE ARCHITECTS, INC.
208 MAGNOLIA AVENUE
DAYTONA BEACH, FLORIDA 32114
www.hoarchitects.com
PH (386) 255-6163
FAX (386)257-5650
AA-C000925

SEAL

REVISIONS

NO.	DATE	DESCRIPTION

Replacement Fire Station # 96
City of Holly Hill, Fl.
1020 Daytona Avenue
Holly Hill , Florida

CONSULTING ENGINEERS
CA # 27084
301 Trails Dr.
Orlando, FL 32807
Tel 407-275-3002
Fax 407-275-5779
E-mail: ab@abengs.com

ASHRAF ELBAHY, PhD, PE
FLORIDA PE # 52616

ARCH/ENGR OF RECORD
ASHRAF ELBAHY, PHD, PE, SE,SI
FL PE NO. 52616

DESIGNED BY	DRAWN BY
AB	JEB
ISSUE DATE	AE PROJECT NUMBER
18-MAY-2023	2204

SHEET TITLE
FRAMING PLANS

DRAWING NO.
S1.2

Attachment: Exhibit C - Fire Station #96 Bid Set (2023-R-55 : Fire Station Construction)

NOTE:
SEE ____ FOR TYP FILLED CELL DETAILS

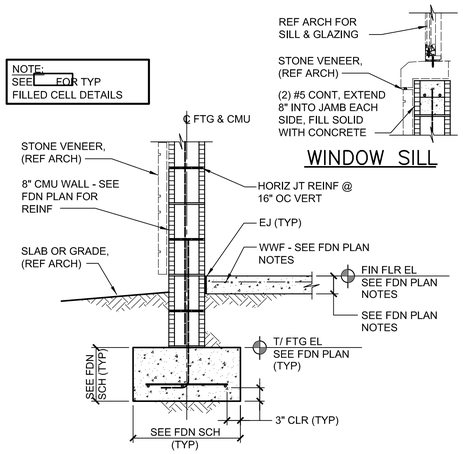

WINDOW SILL

1 S2.0 SECTION @ EXT CMU WALL

SCALE: 3/4" = 1'-0" TYP UNO

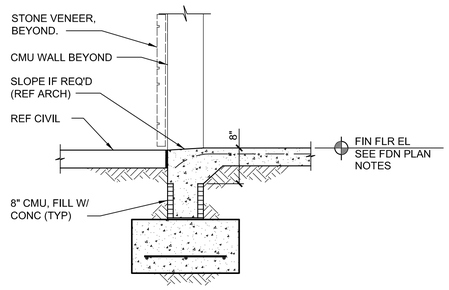

2 S2.0 SECTION @ EXT CMU WALL OPNG

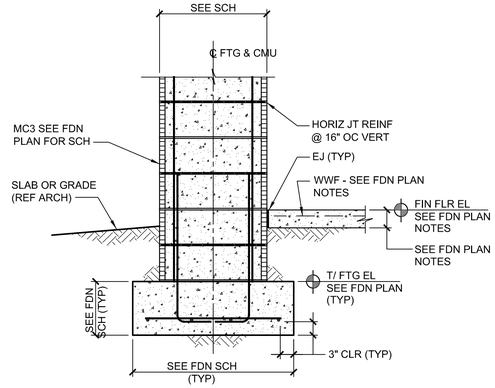

3 S2.0 SECTION @ MASONRY COLUMN

WALL REINFORCING SCHEDULE	
HEIGHT	*VERT WALL REINF
0 TO 10'-0"	#5 @ 80" OC
10'-1" TO 16'-0"	#5 @ 64" OC
16'-1" TO 30'-0"	#5 @ 48" OC

* LOCATE VERT REINF BARS AT ENDS, CORNERS AND AT MAX SPACING AS INDICATED IN SCHEDULE.

NOTES:
1. PROVIDE 3/8" THRU-WALL CONTROL JOINTS PER GENERAL NOTES.
2. CMU NON-LOAD BEARING INTERIOR PARTITION WALLS SHALL BE BRACED AT MAX 24'-0" OC BY A WALL BRACE ANGLE AS SHOWN HEREIN OR BY INTERSECTING CMU WALL.
3. DISCONTINUE REINF AT JOINT.

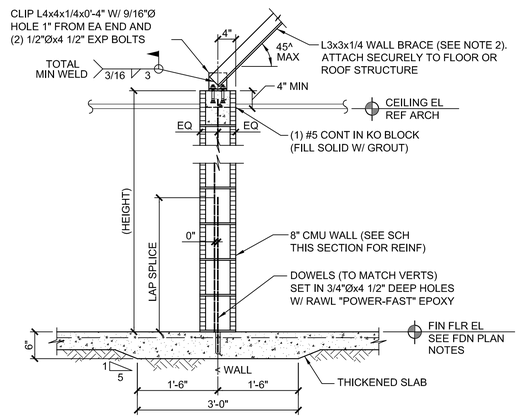

SECTION @ INTERIOR PARTITION WALL

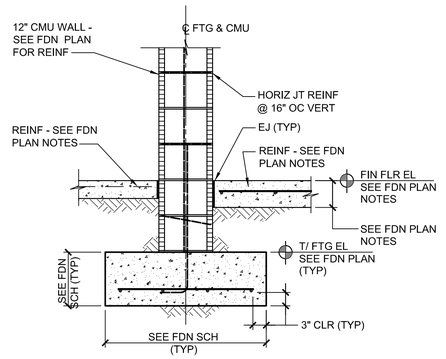

5 S2.0 SECTION @ INT CMU WALL

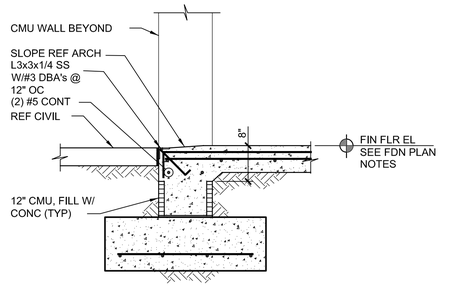

6 S2.0 SECTION @ EXT CMU WALL OPNG

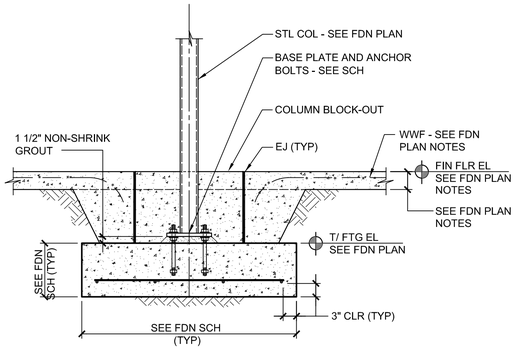

7 S2.0 SECTION @ HSS COL FTG

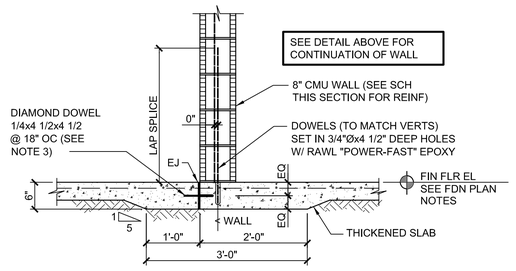

SECTION WHERE F/ WALL OCCURS @ CJ

4 S2.0 SECTION @ INT NON–LOAD BRG CMU WALL

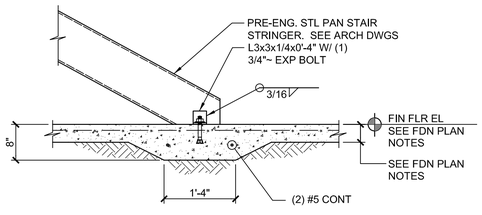

8 S2.0 SECTION @ STAIR STRINGER CONN TO SLAB

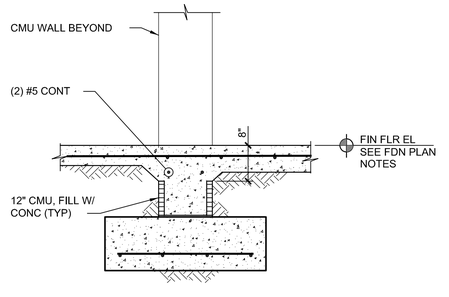

9 S2.0 SECTION @ INT CMU WALL OPNG

HALL & OGLE ARCHITECTS, INC.
208 MAGNOLIA AVENUE
DAYTONA BEACH, FLORIDA 32114
PH.(386) 255-6163
FAX.(386)257-5650
AA-C000925
www.hoarchitects.com

SEAL

REVISIONS

NO.	DATE	DESCRIPTION

Replacement Fire Station # 96
City of Holly Hill, Fl.
1020 Daytona Avenue
Holly Hill , Florida

CONSULTING ENGINEERS
CA # 27084
301 Trails Dr.
Orlando, FL 32807
Tel 407-275-3050
Fax 407-275-5770
E-mail: ab@abengr.com
ASHRAF ELBAHY, PHD, PE
FLORIDA PE # 52616

ARCH/ENGR OF RECORD
ASHRAF ELBAHY, PHD, PE, SE,SI
FL PE NO. 52616

DESIGNED BY	DRAWN BY
AB	JEB
ISSUE DATE	AE PROJECT NUMBER
18-MAY-2023	2204

SHEET TITLE
FOUNDATION SECTIONS

DRAWING NO.
S2.0

Attachment: Exhibit C - Fire Station #96 Bid Set (2023-R-55 : Fire Station Construction)

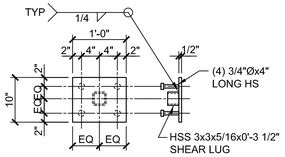

EMBED PLATE DETAIL

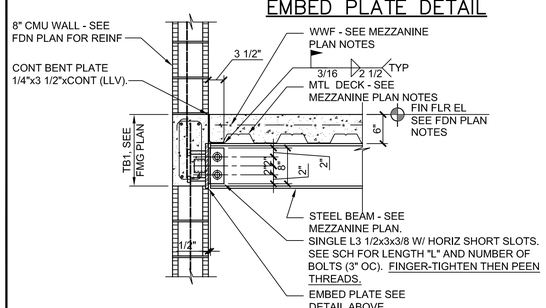

1 S3.0 SECTION @ MEZZANINE STL BM BRG

SCALE: 3/4" = 1'-0" TYP UNO

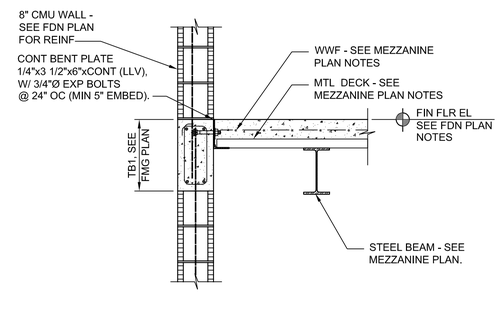

2 S3.0 SECTION @ MEZZANINE DECK BRG

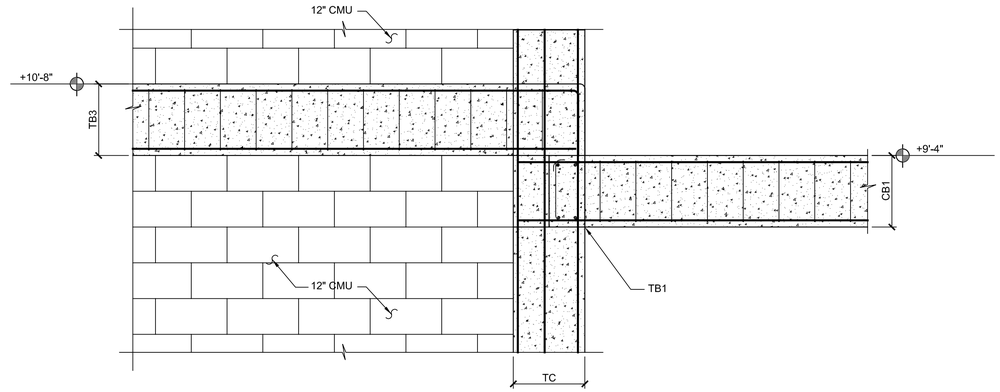

3 S3.0 SECTION @ CONCRETE BEAM STEP (CB)

4 S3.0 SECTION @ MEZZANINE STL BM BRG

5 S3.0 SECTION @ LGM TRUSS BEARING

GC NOTE: COORDINATE THIS SECTION W/ ARCH DRAWINGS. ALT. EMBEDS

6 S3.0 SECTION @ LGM TRUSS BEARING

7 S3.0 SECTION @ LGM RAFTER BEARING

8 S3.0 SECTION @ DECK BEARING

9 S3.0 SECTION @ LGM TRUSS BEARING

10 S3.0 SECTION @ DECK BEARING

11 S3.0 SECTION @ LGM TRUSS BEARING

HALL & OGLE ARCHITECTS, INC.
208 MAGNOLIA AVENUE
DAYTONA BEACH, FLORIDA 32114
www.hoarchitects.com
PH (386) 255-6163
FAX (386)257-5650
AA-C000925

SEAL

REVISIONS

NO.	DATE	DESCRIPTION

Replacement Fire Station # 96
City of Holly Hill, Fl.
1020 Daytona Avenue
Holly Hill , Florida

ARCHENGR OF RECORD
ASHRAF ELBAHY, PHD, PE, SE,SI
FL PE NO. 52616

DESIGNED BY	DRAWN BY
AB	JEB
ISSUE DATE	AE PROJECT NUMBER
18-MAY-2023	2204

SHEET TITLE
ROOF FRAMING SECTIONS

DRAWING NO.
S3.0

AB CONSULTING ENGINEERS
CA # 27084
301 Trade Dr.
Orlando, FL 32807
Tel 407-275-3002
Fax 407-275-5779
E-mail: ab@abengs.com

ASHRAF ELBAHY, PhD, PE
FLORIDA PE # 52616

Attachment: Exhibit C - Fire Station #96 Bid Set (2023-R-55 : Fire Station Construction)

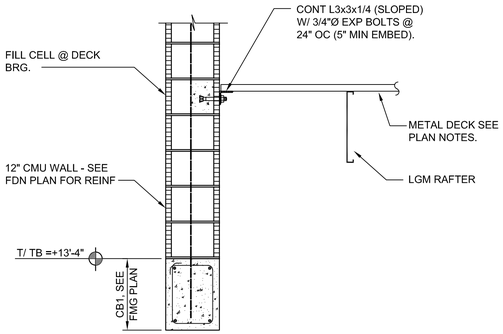

1 S3.1 SECTION @ DECK BEARING

SCALE: 3/4" = 1'-0" TYP UNO

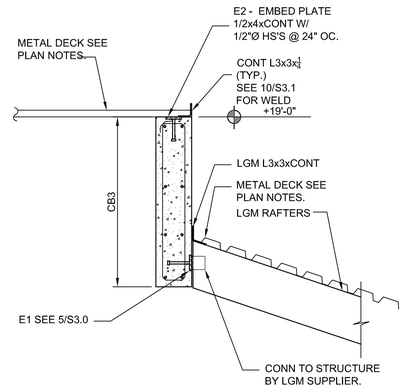

2 S3.1 SECTION @ RAFTER BRG

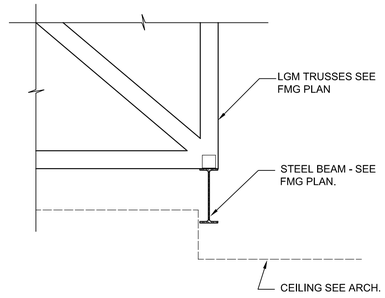

3 S3.1 SECTION @ TRUSS BEARING

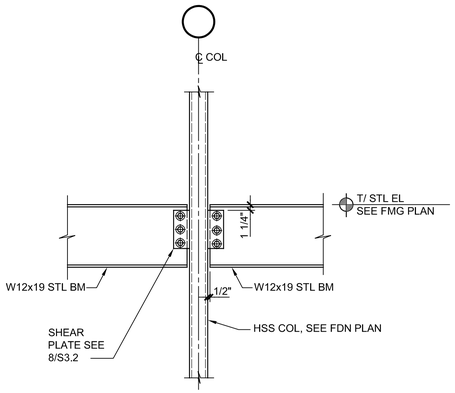

4 S3.1 SECTION @ STL BEAM TO HSS COL

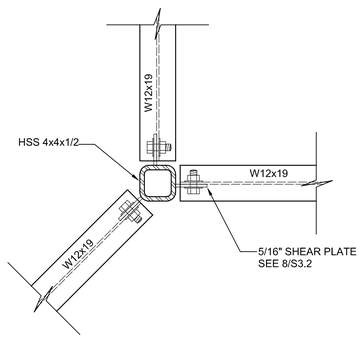

5 S3.1 DETAIL BEAM TO HSS COLUMN

SCALE: 1 1/2" = 1'-0"

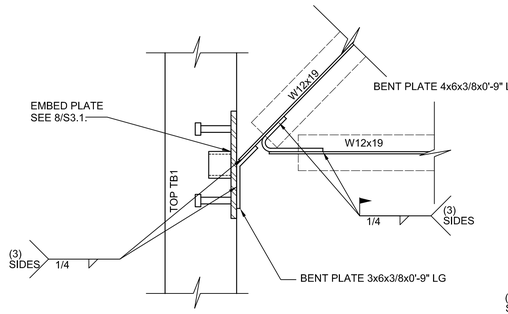

6 S3.1 DETAIL BEAM TO CONC TIE BEAM

SCALE: 1 1/2" = 1'-0"

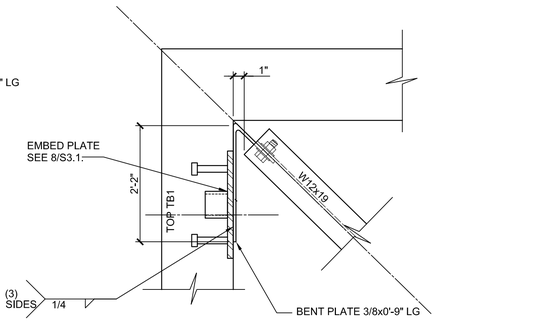

7 S3.1 DETAIL BEAM TO CONC TIE BEAM

SCALE: 1 1/2" = 1'-0"

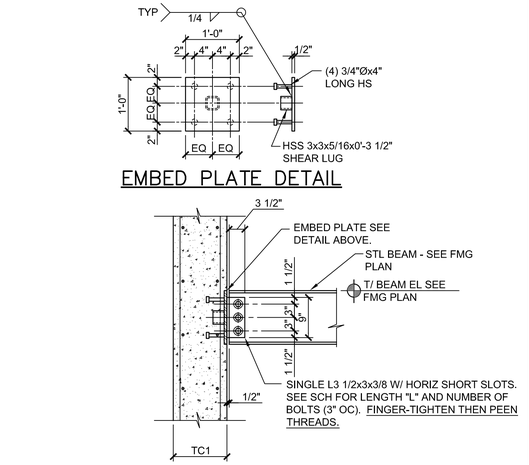

8 S3.1 SECTION @ STL BEAM CONN TO TC1

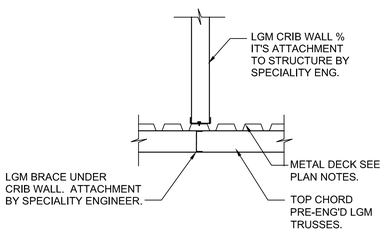

9 S3.1 SECTION @ LGM CRIB WALL

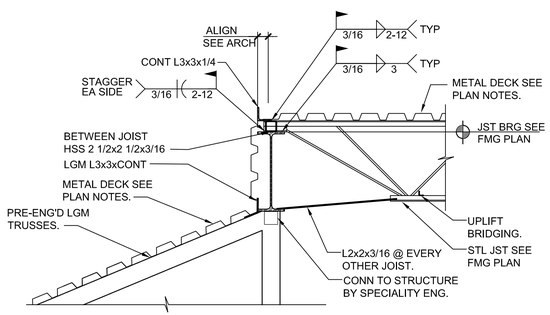

10 S3.1 SECTION @ LGM TRUSS/ STL JST BRG

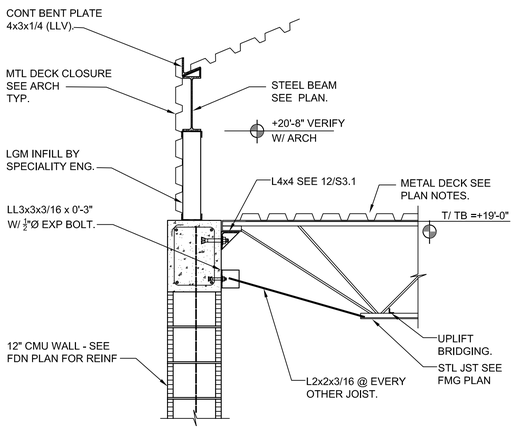

11 S3.1 SECTION @ STL JST BRG

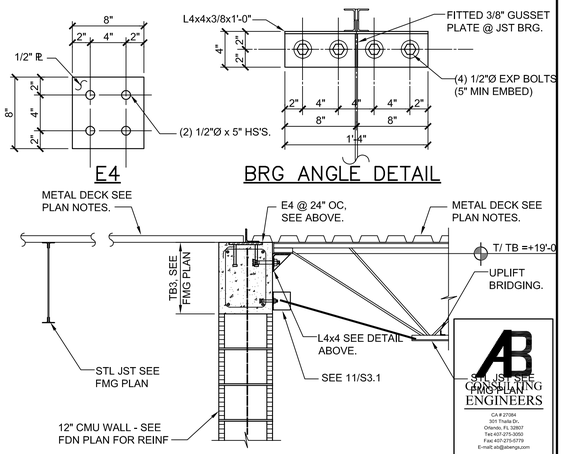

12 S3.1 SECTION @ DECK/ STL JST BRG

HALL & OGLE ARCHITECTS, INC.
208 MAGNOLIA AVENUE
DAYTONA BEACH, FLORIDA 32114
www.hoarchitects.com
PH.(386) 255-6163
FAX.(386)257-5650
AA-C000925

SEAL

REVISIONS

NO.	DATE	DESCRIPTION

Replacement Fire Station # 96
City of Holly Hill, Fl.
1020 Daytona Avenue
Holly Hill , Florida

ARCH/ENGR OF RECORD
ASHRAF ELBAHY, PHD, PE, SE,SI
FL PE NO. 52616

DESIGNED BY	DRAWN BY
AB	JEB
ISSUE DATE	AE PROJECT NUMBER
18-MAY-2023	2204

SHEET TITLE
ROOF FRAMING SECTIONS

DRAWING NO.
S3.1

CONSULTING ENGINEERS
CA # 27084
301 Trada Dr.,
Orlando, FL 32807
Tel:407-275-3052
Fax:407-273-5770
E-mail:ae@aeengr.com
ASHRAF ELBAHY, PHD, PE
FLORIDA PE # 52616

Attachment: Exhibit C - Fire Station #96 Bid Set (2023-R-55 : Fire Station Construction)

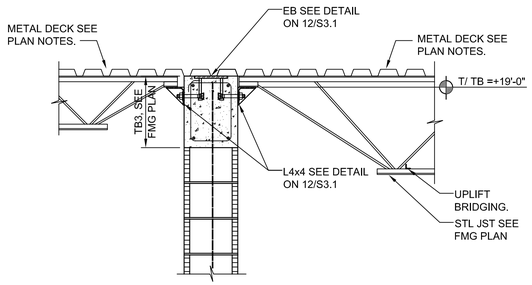

1 S3.2 SECTION @ STL JST BRG

SCALE: 3/4" = 1'-0" TYP UNO

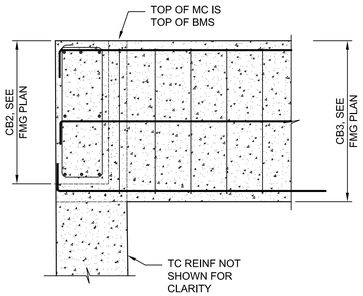

2 S3.2 SECTION @ CB2 TO CB3

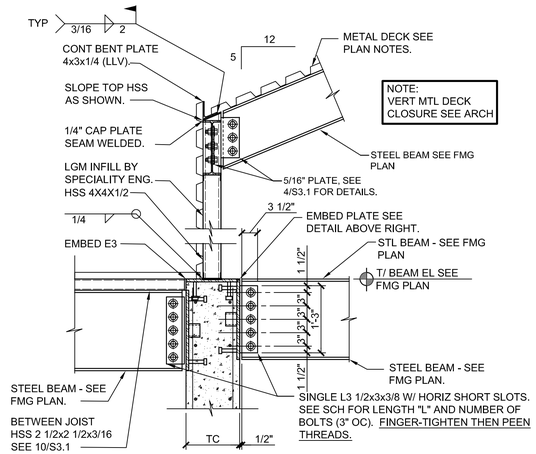

3 S3.2 SECTION @ STL BEAM / STL COL TO TC1

SCALE: 3/4" = 1'-0" TYP UNO

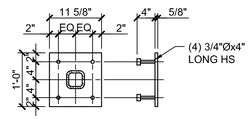

E3

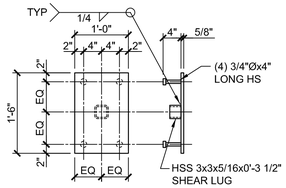

EMBED PLATE DETAIL'S

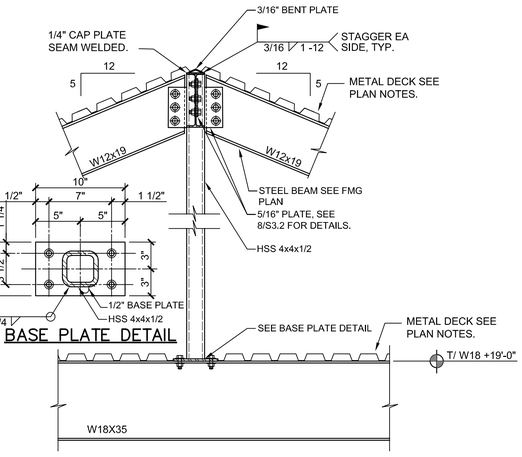

BASE PLATE DETAIL

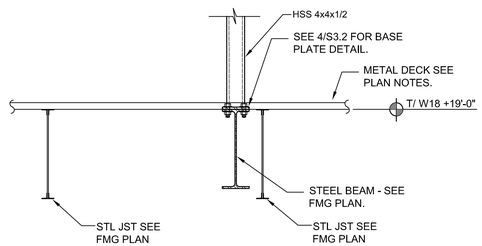

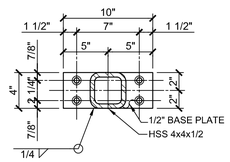

TOP PLATE DETAIL

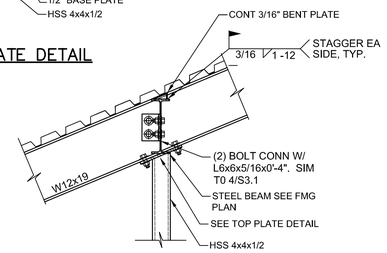

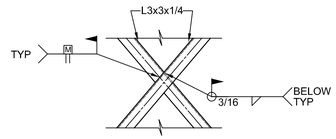

6A S3.2 DETAIL L3x3 BRACE CONN

4 S3.2 SECTION @ HSS 4x4 STUB COLUMN

4A S3.2 SECTION @ DECK BEARING

5 S3.2 SECTION @ SLOPED STL BM TO STL BM CONN

6 S3.2 DETAIL L3x3 BRACE CONN

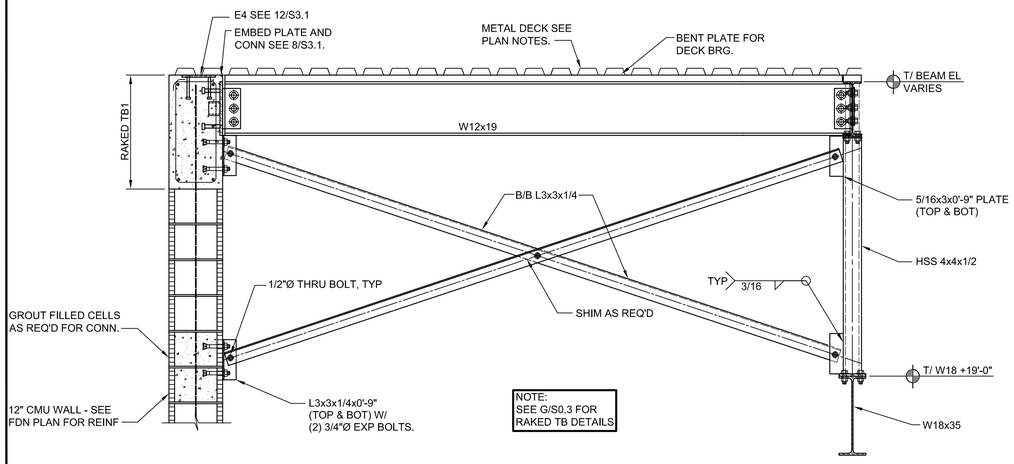

7 S3.2 SECTION @ X-BRACING

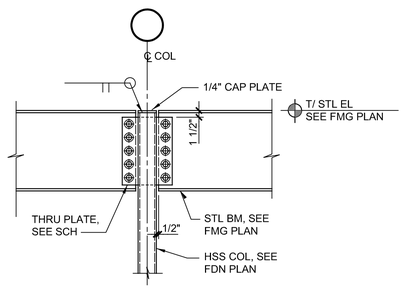

8 S3.2 SECTION (STL BM TO COL)

SCALE: NTS

SINGLE-PLATE SHEAR CONNECTION SCHEDULE
(SHOP-WELDED, FIELD-BOLTED)

BEAM SIZE (SEE PLAN)	NUMBER OF 3/4" DIA A325N BOLTS	THRU-PLATE LENGTH "L"	THRU-PLATE THICKNESS (36 KSI)	FILLET WELD SIZE (E70XX)	MAXIMUM ULTIMATE END REACTION (KIPS)
W8, W10	2	6"	5/16	1/4	14
W12, W14	3	9"	5/16	1/4	27.8
W16	4	12"	5/16	1/4	44.7
W18	5	15"	5/16	1/4	62.0

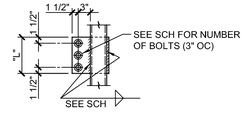

THRU PLATE DETAIL

NOTES:

1. FOR BEAMS NOT SHOWN HEREIN, FABRICATOR SHALL DESIGN THE SHEAR CONNECTION BASED ON THE REACTION SHOWN ON THE PLAN.
2. PROVIDE HORIZ SLOTS IN THRU >.
3. BEAMS SHALL BE 50 KSI.
4. PROVIDE HARDENED WASHER OVER SLOTTED HOLES.
5. BOLTS SHALL BE INSTALLED "SNUG-TIGHT".

HALL & OGLE ARCHITECTS, INC.
208 MAGNOLIA AVENUE
DAYTONA BEACH, FLORIDA 32114
www.hoarchitects.com
PH:(386) 255-6163
FAX:(386)257-5650
AA-C000925

SEAL

REVISIONS

NO.	DATE	DESCRIPTION

Replacement Fire Station # 96
City of Holly Hill, Fl.
1020 Daytona Avenue
Holly Hill , Florida

CONSULTING ENGINEERS
CA # 27084
301 Trotta Dr.
Orlando, FL 32807
Tel:407-275-3050
Fax:407-275-5779
E-mail:ab@abengr.com
ASHRAF ELBAHY, PHD, PE
FLORIDA PE # 52616

ARCH/ENGR OF RECORD
ASHRAF ELBAHY, PHD, PE, SE,SI
FL PE NO. 52616

DESIGNED BY	DRAWN BY
AB	JEB
ISSUE DATE	AE PROJECT NUMBER
18-MAY-2023	2204

SHEET TITLE
ROOF FRAMING SECTIONS

DRAWING NO.
S3.2

Attachment: Exhibit C - Fire Station #96 Bid Set (2023-R-55 : Fire Station Construction)

MASONRY LINTEL SCHEDULE (8" OR 12")

TYPE	LENGTH (L)	REINFORCING	REMARKS
PB1	L < 5'-4"	2-#5 BOT	MIN 1200 PLF CAP TO BE VER BY PRECASTER
PB2	5'-4" < L < 10'-0"	2-#5 TOP & BOT	MIN 1350 PLF CAP TO BE VER BY PRECASTER
PB3	10'-0" < L < 14'-0"	2-#5 TOP, MID, & BOT	MIN 1500 PLF CAP TO BE VER BY PRECASTER

NOTES:

1. PROVIDE MINIMUM END BEARING OF 8". CUT OUT BOTTOM OF LINTEL AT END TO ALLOW CONTINUATION OF FILLED CELL REINFORCING.
2. MASONRY LINTEL SUBSTITUTIONS SHALL BE APPROVED BY THE STRUCTURAL ENGINEER OF RECORD PRIOR TO INSTALLATION.
3. SEE ARCH'L, MECH., ELEC. & PLUMBING DRAWINGS FOR SIZE AND LOCATIONS OF CMU OPENINGS.
4. SHORE PRECAST "U" LINTELS PER MANUFACTURER'S RECOMMENDATIONS.
5. SEE PLAN (S) FOR LOCATION.

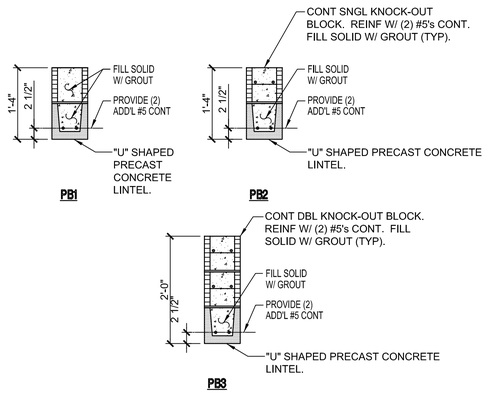

LINTEL TYPES

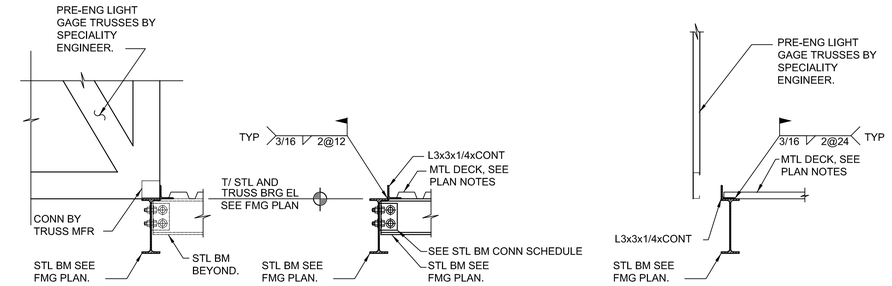

1 S3.3 MASONRY LINTEL SCHEDULE

SCALE: NTS TYP UNO

2 S3.3 SECTION @ MECHANICAL AREA

NOTE:
REFER TO ARCH DWGS FOR TRUSS EXTENSIONS TYP.

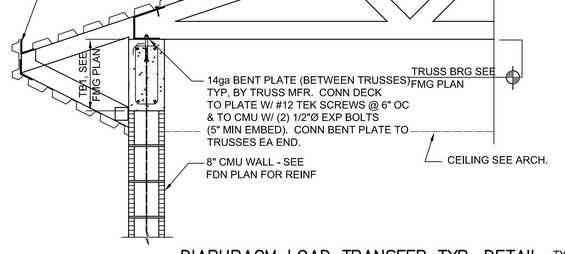

DIAPHRAGM LOAD TRANSFER TYP. DETAIL

3 S3.3 TYP. SECTION BETWEEN TRUSSES

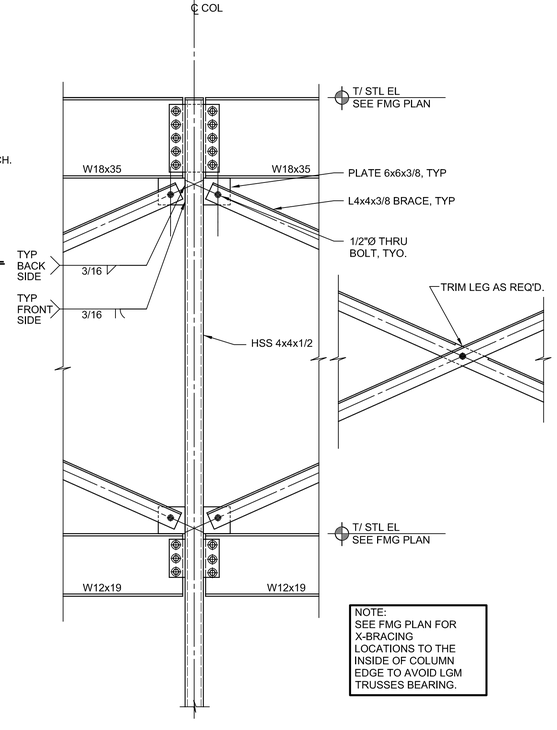

NOTE:
SEE FMG PLAN FOR X-BRACING LOCATIONS TO THE INSIDE OF COLUMN EDGE TO AVOID LGM TRUSSES BEARING.

4 S3.3 SECTION @ X-BRACING TO HSS COL

HALL & OGLE ARCHITECTS, INC.
208 MAGNOLIA AVENUE
DAYTONA BEACH, FLORIDA 32114
www.hoarchitects.com
PH (386) 255-6163
FAX (386)257-5650
AA-C000925

SEAL

REVISIONS

NO.	DATE	DESCRIPTION

DOCUMENT HISTORY

Replacement Fire Station # 96
City of Holly Hill, Fl.
1020 Daytona Avenue
Holly Hill , Florida

CONSULTING ENGINEERS
CA # 27084
301 Trails Dr.
Orlando, FL 32807
Tel 407-275-3002
Fax 407-275-5779
E-mail: ab@abengs.com
ASHRAF ELBAHY, PhD, PE
FLORIDA PE # 52616

ARCH/ENGR OF RECORD
ASHRAF ELBAHY, PHD, PE, SE,SI
FL PE NO. 52616

DESIGNED BY	DRAWN BY
AB	JEB
ISSUE DATE	AE PROJECT NUMBER
18-MAY-2023	2204

SHEET TITLE
ROOF FRAMING SECTIONS

DRAWING NO.
S3.3

Attachment: Exhibit C - Fire Station #96 Bid Set (2023-R-55 : Fire Station Construction)

HVAC SYMBOLS

SYMBOL	DESCRIPTION
	NEW DUCT WORK
	FLEXIBLE DUCT
	SUPPLY AIR DUCT WORK
	RETURN AIR OR EXHAUST DUCT WORK
	DUCT WORK TRANSITION
	90° ELBOW WITH TURNING VANES
	RADIUS ELBOW
	MANUAL AIR VOLUME CONTROL DAMPER
OR	SUPPLY AIR DEVICE
	RETURN AIR DEVICE
	EXHAUST AIR DEVICE
T	WALL MOUNTED THERMOSTAT
S	WALL MOUNTED TEMPERATURE SENSOR
SP	STATIC PRESSURE SENSOR
PS	ANSUL SYSTEM PULL STATION
SD	DUCT SMOKE DETECTOR
A-100	DIFFUSER DEVICE TYPE - AIR QUANTITY
TYP.	TYPICAL
(E)	EXISTING
RTU-10	EQUIPMENT DESIGNATION TAG
UC	1" DOOR UNDERCUT
1	REVISION REFERENCE
R	REFRIGERATION PIPING
	CONDENSATE PIPING ON ROOF
CD	CONDENSATE DRAIN PIPING
FD	FIRE DAMPER
SD	SMOKE DAMPER
F/SD	FIRE/SMOKE DAMPER
CO	CLEANOUT
	ACCESS DOOR/PANEL

DRAWING INDEX

SHEET NUMBER	TITLE
M0.1	Mechanical General Information
M0.2	Mechanical Schedules
M1.1	Mechanical Floor Plan
M5.1	Mechanical Details
M5.2	Mechanical Details

TESTING AND BALANCING NOTES

1. CONTRACTOR WILL BE RESPONSIBLE TO PROVIDE TESTING, ADJUSTING AND BALANCING FOR THIS PROJECT. TESTING, ADJUSTING AND BALANCING SHALL BE DONE IN ACCORDANCE WITH THESE NOTES.
2. THE FOLLOWING MECHANICAL (HVAC) SYSTEMS SHALL BE TESTED, ADJUSTED AND BALANCED:
   A. AIR HANDLING UNITS AND RELATED SUPPLY AND RETURN DUCTWORK, INCLUDING ALL AIR INLETS AND OUTLETS AND AIR HANDLING UNIT OUTSIDE AIR.
   B. EXHAUST FANS.
3. PRIOR TO COMMENCING ANY WORK; REVIEW CONTRACT DOCUMENTS, TESTING,ADJUSTING AND BALANCING STRATEGIES AND STEP-BY-STEP PROCEDURES.
4. CONTRACTOR PROVIDING TESTING, ADJUSTING AND BALANCING SHALL BE CERTIFIED BY EITHER AABC OR NEBB.
5. TESTING, ADJUSTING AND BALANCING REPORT FORMS SHALL BE STANDARD FORMS FROM EITHER AABC OR NEBB.
6. CONTRACTOR SHALL COORDINATE THE EFFORTS OF FACTORY-AUTHORIZED SERVICE REPRESENTATIVES FOR SYSTEMS AND EQUIPMENT. HVAC CONTROLS INSTALLERS, AND OTHER MECHANICS TO OPERATE HVAC SYSTEMS AND EQUIPMENT TO SUPPORT AND ASSIST THE TESTING , ADJUSTING AND BALANCING ACTIVITIES.
7. CONTRACTOR SHALL VERIFY QUANTITIES AND LOCATIONS OF BALANCING DEVICES. CONTRACTOR SHALL VERIFY THAT THESE BALANCING DEVICES ARE ACCESSIBLE AND APPROPRIATE FOR BALANCING AND FOR EFFICIENT SYSTEM EQUIPMENT OPERATION PRIOR TO COMMENCEMENT OF WORK..
8. CONTRACTOR SHALL PERFORM TESTING AND BALANCING PROCEDURES IN EACH AIR AND WATER SYSTEM.
9. HVAC SYSTEM AIR AND WATER FLOW RATES SHALL BE WITHIN THE FOLLOWING TOLERANCES:
   A. SUPPLY: PLUS 5 TO PLUS 10 PERCENT
   B. RETURN: PLUS 5 TO PLUS 10 PERCENT
   C. EXHAUST FANS: PLUS 5 TO PLUS 10 PERCENT
   D. EQUIPMENT WITH FANS: PLUS 5 TO PLUS 10 PERCENT
   E. AIR OUTLETS AND INLETS: 0 TO MINUS 10 PERCENT
   F. DOMESTIC HOT WATER RECIRCULATING FLOW RATE: 0 TO MINUS 10 PERCENT.
10. FINAL BALANCING REPORT SHALL INCLUDE THE FOLLOWING:
    A. TEST CONDITIONS FOR FANS AND PUMPS
    B. SYSTEMS DIAGRAMS
    C. AIR CONDITIONING UNIT TEST REPORTS
    D. APPARATUS COIL TEST REPORTS
    E. ELECTRCIAL-COIL TEST REPORTS
    F. FAN TEST REPORTS
    G. DUCT TRANSVERSE REPORTS
    H. AIR-TERMINAL DEVICE REPORTS
    I. SYSTEM COIL REPORTS
    J. PUMP TEST REPORTS
11. ADDITIONAL TESTING AND BALANCING SHALL BE MADE AS DIRECTED BY THE DESIGN ENGINEER TO CORRECT UNUSUAL CONDITIONS. ADDITIONAL TESTING WILL NOT EXCEED THREE DAYS DURING THE FIRST SIX MONTHS OF OPERATION.
12. IF INITIAL TESTING AND BALANCING PROCEDURES WERE NOT PERFORMED DURING THE NEAR-PEAK SUMMER AND WINTER CONDITIONS, PERFORM ADDITIONAL TESTING, ADJUSTING DURING NEAR-PEAK SUMMER AND WINTER CONDITIONS.
13. CONTRACTOR TO PROVIDE THREE (3) COPIES OF THE TESTING, ADJUSTING AND BALANCING REPORT FOR REVIEW.

PIPING MATERIAL SCHEDULE

SERVICE	SIZE	MATERIAL	SCHEDULE / TYPE	INSULATION		REMARKS
				TYPE	THICK	
A/C CONDENSATE	ALL	PVC	SCH. 40	NONE	-	--
REFRIGERANT PIPING	ALL	COPPER	TYPE L	FG	1"	--

NOTES:

1. FIBERGLASS PIPE INSULATION: MINERAL OR GLASS FIBERS BONDED WITH A THERMOSETTING RESIN. SEMIRIGID BOARD MATERIAL WITH FACTORY-APPLIED ASJ COMPLYING WITH ASTM C 1393, OR WITH PROPERTIES SIMILAR TO ASTM C 612. NOMINAL DENSITY IS 2.5 LB/CU. FT. OR MORE. THERMAL CONDUCTIVITY (K VALUE) AT 100 DEG. F (55 DEG. C) IS 0.29 BTU X IN./H X SQ.FT. X DEG. F (0.042 W/M X K) OR LESS. ALL SERVICE JACKET (ASJ): WHITE, KRAFT-PAPER, FIBERGLASS-REINFORCED SCRIM WITH ALUMINUM-FOIL BACKING; COMPLYING WITH ASTM C 1136, TYPE MANUFACTURERS; A. CERTAINTEED CORP., B. JOHNS MANVILLE, C. KNAUF INSULATION, D. OWENS CORNING.
2. FLEXIBLE ELASTOMERIC PIPE INSULATION: CLOSED CELL SPONGE OR EXPANDED - RUBBER MATERIALS. COMPLY WITH ASTM C-534, TYPE I FOR TUBULAR MATERIALS. PROVIDE SEALANT COMPATIBLE WITH MATERIAL. MANUFACTURERS: ARMAFLEX BY ARMACELL OR EQUAL.

FLORIDA BUILDING CODE SEVENTH EDITION (2020) ENERGY CONSERVATION COMPLIANCE

THE DESIGN COMPLIES WITH SECTION C401.2 APPLICATION ITEM 3:

THE REQUIREMENTS OF SECTION C402.5, C403.2, C404, C405.2, C405.4, C405.5, C407 AND C408. THE BUILDING ENERGY COST SHALL BE EQUAL TO OR LESS THAN 85 PERCENT OF THE STANDARD REFERENCE DESIGN BUILDING.

MECHANICAL GENERAL NOTES

1. ALL MECHANICAL WORK SHALL MEET ALL THE REQUIREMENTS OF THE FLORIDA BUILDING CODE SEVENTH EDITION 2020, FLORIDA BUILDING CODE SEVENTH EDITION 2020- MECHANICAL, FBC SEVENTH EDITION 2020- ENERGY CONSERVATION, FFPC SEVENTH EDITION- 2020.
2. CONTRACTOR TO VISIT SITE AND VERIFY ALL CLEARANCES BEFORE FABRICATION OF DUCTWORK AND PROVIDE ADDITIONAL OFFSET AND/OR CHANGES IN DUCT SIZES TO MEET FIELD CONDITIONS AND COORDINATE WITH ELECTRICAL, PLUMBING AND FIRE PROTECTION SUBCONTRACTOR BEFORE ANY CONSTRUCTION WORK.
3. PROVIDE EQUIPMENT GUARDS AT ALL EQUIPMENT WITHIN 10 FEET OF A ROOF EDGE OR OPEN SIDE OF WALKING SURFACE THAT IS OVER 30" ABOVE FLOOR GRADE.
4. OUTSIDE AIR INTAKES (ROOFTOP UNITS, GRAVITY ROOF VENTS, LOUVERS) SHALL MAINTAIN A MINIMUM OF 10'-0" FROM ANY EXHAUST OUTLET OR SANITARY VENT.
5. PROVIDE ALL MECHANICAL EQUIPMENT WITH MANUFACTURER'S RECOMMENDED SERVICE AREA CLEARANCES.
6. ALL ROOF TOP UNITS SHALL BE CONSTRUCTED AND INSTALLED TO WITHSTAND LOCAL WIND LOAD DESIGN.
7. DUCT SMOKE DETECTORS SHALL BE FURNISHED BY THE FIRE ALARM CONTRACTOR, INSTALLED IN DUCT BY THE MECHANICAL CONTRACTOR AND WIRED BY THE FIRE ALARM CONTRACTOR. SMOKE DETECTORS SHALL BE INSTALLED IN ACCORDANCE WITH NFPA 72, NATIONAL FIRE ALARM CODE; NFPA 90A, STANDARD FOR INSTALLATION OF AIR-CONDITIONING AND VENTILATING SYSTEMS, FLORIDA BUILDING CODE SEVENTH EDITION 2020 - MECHANICAL AND THE MANUFACTURER'S INSTALLATION INSTRUCTIONS. COORDINATE LOCATION OF SMOKE DETECTORS WITH FIRE ALARM CONTRACTOR. PROVIDE A VISIBLE/AUDIBLE NOTIFICATION PANEL. MAKE: SYSTEM SENSOR RTS2 OR EQUAL, COMPATIBLE WITH BUILDING FIRE ALARM SYSTEM.
8. PLANS AND DIAGRAMS ARE SCHEMATIC ONLY AND SHOULD NOT BE SCALED.
9. PROVIDE EXTERNAL DUCT INSULATION FOR SUPPLY, RETURN AND OUTSIDE AIR DUCTWORK. DUCTWORK INSULATION SHALL BE FOIL FACED FIBERGLASS DUCT WRAP WITH A MINIMUM THERMAL RESISTANCE (R) OF 6.0. INSULATION SHALL HAVE VAPOR BARRIER. INSTALL PER MFR. REQUIREMENTS.
10. COORDINATE CEILING MOUNTED DIFFUSERS, REGISTERS, AND GRILLES AND OTHER CEILING MOUNTED EQUIPMENT WITH OTHER CEILING MOUNTED EQUIPMENT. SEE REFLECTED CEILING PLAN.
11. DUCTWORK, DIFFUSERS, REGISTERS, GRILLES, AND OTHER ITEMS OF THE AIR HANDLING SYSTEM SHALL NOT BE SUPPORTED BY THE CEILING OR CEILING SUSPENSION SYSTEM.
12. CONTRACTOR TO PROVIDE ALL SUPPLEMENTARY STEEL REQUIRED TO SUSPEND MECHANICAL EQUIPMENT & MATERIALS. INSTALLATION OF EQUIPMENT SHALL COMPLY WITH MANUFACTURER'S SPECIFICATIONS AND CLEARANCE REQUIREMENTS FOR SERVICING OF EQUIPMENT
13. VERIFY VOLTAGE REQUIREMENTS WITH ELECTRICAL CONTRACTOR BEFORE ORDERING EQUIPMENT.
14. PROVIDE A TRAP IN ALL CONDENSATE PIPING SERVING AIR HANDLING UNITS AND ROOFTOP UNITS. SLOPE CONDENSATE LINE 1/8" PER FOOT. ALL CONDENSATE DRAIN PIPING SHALL BE PROPERLY SUPPORTED.
15. GUARANTEE; FOR ONE YEAR AFTER DATE OF ACCEPTANCE BY THE OWNER, ALL EQUIPMENT, MATERIALS AND WORKMANSHIP TO BE FREE FROM DEFECT.
16. DO NOT CUT STRUCTURAL MEMBERS WITHOUT PRIOR WRITTEN APPROVAL OF THE STRUCTURAL ENGINEER.
17. FLEXIBLE AND RIGID ROUND DUCT TAKE-OFFS FOR DIFFUSERS SHALL BE THE SAME SIZE AS DIFFUSER NECK. MAXIMUM FLEXIBLE DUCT LENGTH SHALL BE 8'-0". FLEXIBLE DUCT SHALL BE THERMAFLEX TYPE M-KC OR EQUAL. FLEXIBLE DUCT SHALL BE INSULATED FIBERGLASS, R-6, CLASS 1, UL181 LISTED AND COMPLY WITH NFPA 90A AND NFPA 90B.
18. ALL WALL MOUNTED THERMOSTATS AND HUMIDISTATS SHALL BE INSTALLED AT AN ELEVATION OF 48" ABOVE FINISHED FLOOR TO THE TOP UNLESS OTHERWISE NOTED ON DRAWINGS. LOCATION OF THE WALL MOUNTED THERMOSTAT SHALL BE COORDINATED WITH OTHER TRADES FOR A NEAT APPEARANCE. FINAL LOCATION OF THERMOSTAT SHALL BE SUBJECT TO THE APPROVAL OF THE ENGINEER OR HIS REPRESENTATIVE IN THE FIELD.
19. PROVIDE FLEXIBLE NEOPRENE DUCT CONNECTORS ON THE DISCHARGE AND ENTERING SIDES OF ROOFTOP UNITS, AIR HANDLING UNITS, FANS AND OTHER VIBRATING EQUIPMENT TO WHICH DUCTWORK IS ATTACHED.
20. PROVIDE ACCESS DOORS IN HARD CEILINGS OR WALLS REQUIRING ACCESS TO VALVES, FIRE DAMPERS, BALANCING DAMPERS, VOLUME DAMPERS OR OTHER PARTS OF THE SYSTEM WHICH REQUIRE OPERATION OR MAINTANENCE AND ARE LOCATED AT INACCESSIBLE AREAS. MAKE: MILCOR MODEL C FOR CEILING LOCATION. MILCOR MODEL M FOR WALL LOCATION. INSTALL FOR DOWNWARD OPENING IN CEILING LOCATIONS.
21. COORDINATION: CONTRACTOR SHALL COORDINATE ITS CONSTRUCTION OPERATIONS WITH THOSE OF OTHER CONTRACTORS AND ENTITIES TO ENSURE EFFICIENT AND ORDERLY INSTALLATION OF EACH PART OF THE WORK. CONTRACTOR SHALL COORDINATE ITS OPERATIONS WITH OTHER CONTRACTORS OPERATIONS, THAT DEPEND ON EACH OTHER FOR PROPER INSTALLATION, CONNECTION AND OPERATION.
22. REFER TO ARCHITECTURAL DRAWINGS FOR ALL RELATED CONSTRUCTION DETAILS AS APPLICABLE TO THE HVAC SYSTEM. CHASE AND WALL PENETRATIONS INTENDED FOR DUCTWORK AND PIPING SHALL BE VERIFIED WITH ARCHITECTURAL DRAWINGS PRIOR TO INSTALLATION.
23. MECHANICAL EQUIPMENT, DUCTWORK AND PIPING IS SHOWN AT APPROXIMATE LOCATIONS. FIELD MEASURE FINAL DUCTWORK AND PIPING LOCATIONS PRIOR TO FABRICATION AND MAKE ADJUSTMENT AS REQUIRED TO FIT THE DUCTWORK AND PIPING WITHIN THE AVAILABLE SPACE. FIELD VERIFY FINAL LOCATIONS TO INSTALL EQUIPMENT IN ACCORDANCE WITH THE MANUFACTURER'S RECOMMENDATIONS REGARDING SERVICE CLEARANCE AND PROPER AIRFLOW CLEARANCE AROUND EQUIPMENT.
24. WHEN THE INTENT OF THE DRAWINGS AND SPECIFICATIONS IS NOT CLEAR, OR IS CAPABLE OF MORE THAN ONE INTERPRETATION, SUCH MATTERS WILL BE BROUGHT TO THE ATTENTION OF THE ARCHITECT/ENGINEER IN WRITING BEFORE THE SUBMISSION OF BIDS. THE ARCHITECT/ENGINEER SHALL MAKE CORRECTION OR EXPLANATION IN WRITING.
25. PLANS AND SPECIFICATIONS ARE INTENDED AS A GENERAL DESCRIPTION OF THE WORK TO BE PERFORMED. ALL ITEMS NOT SPECIFICALLY MENTIONED OR SHOWN, BUT NECESSARY FOR THE COMPLETION OF THE INSTALLATION, SHALL BE FURNISHED AND INSTALLED BY THIS CONTRACTOR. THIS CONTRACTOR SHALL THOROUGHLY ACQUAINT HIMSELF WITH THE MECHANICAL, ARCHITECTURAL, STRUCTURAL AND ELECTRICAL PLANS BEFORE SUBMITTING HIS FINAL BID. NO ADDITIONAL COMPENSATION WILL BE ALLOWED DUE TO THE CONTRACTOR'S FAILURE TO FAMILIARIZE HIMSELF/ HERSELF WITH THE PLANS.
26. CONTRACTOR SHALL ENGAGE A FACTORY-AUTHORIZED SERVICE REPRESENTATIVE FOR START-UP TO INSPECT, TEST AND ADJUST FIELD-ASSEMBLED COMPONENTS AND EQUIPMENT INSTALLATION, INCLUDING CONNECTIONS AND PERFORM THE FOLLOWING FIELD TESTS AND INSPECTIONS:
    1. LEAK TEST: AFTER INSTALLATION, CHARGE SYSTEM AND TEST FOR LEAKS. REPAIR LEAKS AND RETEST UNTIL NO LEAKS EXIST.
    2. OPERATIONAL TEST: AFTER ELECTRICAL CIRCUITRY HAS BEEN ENERGIZED, START UNITS TO CONFIRM PROPER MOTOR ROTATION AND UNIT OPERATION.
    3. TEST AND ADJUST CONTROLS AND SAFETIES. REPLACE DAMAGED AND MALFUNCTIONING CONTROLS AND EQUIPMENT.
    4. REPORT TESTING RESULTS IN WRITTEN REPORT.

SUBMITTALS AND SUBSTITUTIONS

1. CONTRACTOR SHALL SUBMIT THE FOLLOWING EQUIPMENT FOR REVIEW PRIOR TO ORDERING AND INSTALLING
   A. AIR HANDLING UNITS AND AIR COOLED CONDENSERS
   B. DIFFUSERS AND REGISTERS
   C. EXHAUST FANS
   D. DUCT WORK
   E. DUCT CONSTRUCTION STANDARDS
2. PROCESSING TIME: ALLOW 10 WORKING DAYS FOR REVIEW OF EACH SUBMITTAL. ALLOW ADDITIONAL TIME IF COORDINATION WITH SUBSEQUENT SUBMITTALS IS REQUIRED. ENGINEER WILL ADVISE CONTRACTOR WHEN A SUBMITTAL BEING PROCESSED MUST BE DELAYED FOR COORDINATION.
3. SUBMITTALS: PLACE A PERMANENT LABEL OR TITLE BLOCK ON EACH SUBMITTAL ITEM FOR IDENTIFICATION. INDICATE NAME OF FIRM OR ENTITY THAT PREPARED EACH SUBMITTAL ON LABEL OR TITLE BLOCK. PROVIDE A SPACE BESIDE TITLE BLOCK TO RECORD CONTRACTOR'S REVIEW AND APPROVAL MARKINGS AND ACTION TAKEN BY ENGINEER. INCLUDE THE FOLLOWING INFORMATION FOR PROCESSING AND RECORDING ACTION TAKEN:
   A. PROJECT NAME.
   B. DATE.
   C. NAME OF ENGINEER.
   D. NAME OF CONTRACTOR.
   E. NAME OF SUBCONTRACTOR.
   F. NAME OF SUPPLIER.
   G. NAME OF MANUFACTURER.
   H. DRAWING NUMBER AND DETAIL REFERENCES, AS APPROPRIATE.
   I. LOCATION WHERE PRODUCT IS TO BE INSTALLED, AS APPROPRIATE.
4. SUBMIT ELECTRONIC SUBMITTALS VIA EMAIL AS PDF ELECTRONIC FILES.
5. PAPER SUBMITTALS: SUBMIT THREE PAPER COPIES OF EACH SUBMITTAL UNLESS OTHER WISE INDICATED. ENGINEER WILL RETURN TWO COPIES.
6. COLLECT SUBMITTAL DATE INFORMATION INTO A SINGLE SUBMITTAL FOR EACH ELEMENT OF CONSTRUCTION AND TYPE OF PRODUCT OR EQUIPMENT. MARK EACH COPY OF EACH SUBMITTAL TO SHOW WHICH PRODUCTS AND OPTIONS ARE APPLICABLE. INCLUDE THE FOLLOWING INFORMATION, AS APPLICABLE:
   A. MANUFACTURER'S CATALOG CUTS.
   B. MANUFACTURER'S PRODUCT SPECIFICATIONS.
   C. STATEMENT OF COMPLIANCE WITH SPECIFIED REFERENCED STANDARDS.
   D. NOTATION OF COORDINATION REQUIREMENTS.
   E. WIRING DIAGRAMS SHOWING FACTORY-INSTALLED WIRING.
   F. PRINTED PERFORMANCE CURVES.
   G. OPERATIONAL RANGE DIAGRAMS.
   H. CLEARANCES REQUIRED TO OTHER CONSTRUCTION, IF NOT INDICATED ON ACCOMPANYING SHOP DRAWINGS.
7. CONTRACTOR SHALL REVIEW EACH SUBMITTAL AND CHECK FOR COORDINATION WITH OTHER WORK OF THE CONTRACT AND FOR COMPLIANCE WITH THE CONTRACT DOCUMENTS. NOTE CORRECTIONS AND FIELD DIMENSIONS. MARK WITH APPROVAL STAMP BEFORE SUBMITTING TO ENGINEER. APPROVAL STAMP: STAMP SHALL STATE THAT SUBMITTAL HAS BEEN REVIEWED, CHECKED, AND APPROVED FOR COMPLIANCE WITH THE CONTRACT DOCUMENTS AND INITIALLED AND DATED BY CONTRACTOR.
8. ENGINEER WILL REVIEW EACH SUBMITTAL, MAKE MARKS TO INDICATE CORRECTIONS OR REVISIONS REQUIRED, AND RETURN IT. ENGINEER WILL STAMP EACH SUBMITTAL WITH AN ACTION STAMP AND WILL MARK STAMP APPROPRIATELY TO INDICATE ACTION.
9. ENGINEER WILL NOT REVIEW SUBMITTALS THAT DO NOT BEAR CONTRACTOR'S APPROVAL STAMP AND INITIALS AND WILL RETURN THEM WITHOUT ACTION. INCOMPLETE SUBMITTALS ARE UNACCEPTABLE, WILL BE CONSIDERED NONRESPONSIVE, AND WILL BE RETURNED FOR RESUBMITTAL WITHOUT REVIEW. SUBMITTALS NOT REQUIRED BY THE CONTRACT DOCUMENTS MAY NOT BE REVIEWED AND MAY BE DISCARDED
10. SUBSTITUTIONS
    A. SUBSTITUTION OFFERS OWNER A SUBSTANTIAL ADVANTAGE IN COST, TIME, ENERGY CONSERVATION, OR OTHER CONSIDERATIONS.
    B. SUBSTITUTION DOES NOT REQUIRE EXTENSIVE REVISIONS TO THE CONTRACT DOCUMENTS. CONTRACTOR SHALL COMPENSATE ENGINEER FOR ANY REDESIGN AND EVALUATION SERVICES INCLUDING CHANGES REQUIRED BY AUTHORITY HAVING JURISDICTION.
    C. SUBSTITUTION WILL NOT ADVERSELY AFFECT CONSTRUCTION SCHEDULE.
    D. SUBSTITUTION HAS RECEIVED NECESSARY APPROVALS OF AUTHORITIES HAVING JURISDICTION.
    E. SUBSTITUTION HAS BEEN COORDINATED WITH OTHER PORTIONS OF THE WORK.
    F. SUBSTITUTION PROVIDES SPECIFIED WARRANTY.
    G. SUBSTITUTION HAS BEEN COORDINATED WITH OTHER PORTIONS OF THE WORK, AND IS ACCEPTABLE TO ALL CONTRACTORS INVOLVED.
    H. CONTRACTOR SHALL ASSUME ANY ADDITIONAL CONSTRUCTION COSTS AS A RESULT OF THE SUBSTITUTION.

DUCT CONSTRUCTION NOTES

1. SUPPLY AIR, RETURN AIR, OUTSIDE AIR, AND EXHAUST AIR DUCTWORK SHALL BE GALVANIZED SHEET METAL, EXCEPT WHERE INDICATED. METALLIC DUCTS SHALL BE CONSTRUCTED AND INSTALLED PER THE FLORIDA BUILDING CODE SEVENTH EDITION 2020 - MECHANICAL AND THE 2005 EDITION OF THE SMACNA HVAC DUCT CONSTRUCTION STANDARDS - METAL AND FLEXIBLE MANUAL.
2. METAL DUCT STATIC PRESSURE CLASSIFICATION:
   SUPPLY AIR DUCT: 2" W.G.
   RETURN AIR DUCT: 2" W.G. (NEGATIVE)
   EXHAUST AIR DUCT: 2" W.G. (NEGATIVE)
3. SEAL ALL TRANSVERSE JOINTS AND LONGITUDINAL SEAMS PER THE FLORIDA BUILDING CODE SEVENTH EDITION 2020 - ENERGY CONSERVATION TABLE C403.2.9.2 AND THE 2005 EDITION OF SMACNA HVAC DUCT CONSTRUCTION STANDARDS - METAL AND FLEXIBLE.
4. CROSS-BREAK DUCT SURFACES 19" THROUGH 60" USE ANGLE REINFORCING FOR DUCT SIZES OVER 60".
5. ALL METAL LONGITUDINAL SEAMS SHALL BE PITTSBURGH OR OTHER SMACNA LISTED SEAMS. DO NOT USE BUTTON PUNCH SNAPBACK SEAMS.
6. SUSPEND METAL DUCTWORK NOT EXCEEDING 30" LONGEST SIDE. AT EVERY JOINT (NOT TO EXCEED 10'-0") USING 1"x 18 GAUGE GALVANIZED STRAPS ATTACHED TO BOTTOM AND SIDE OF DUCT.
7. SUSPEND METAL DUCTWORK, EXCEEDING 30" LONGEST SIDE, AT MAXIMUM 8'-0" INTERVALS USING ANGLES AND RODS.
8. SUPPORT DUCTWORK AND EQUIPMENT FROM STRUCTURAL MEMBER. ATTACHMENT TO ROOF DECK IS NOT ACCEPTABLE.
9. DUCT SIZES MUST BE VERIFIED FOR CLEARANCES AT THE JOB SITE PRIOR TO FABRICATION. DIMENSIONS MAY BE CHANGED TO ACCOMMODATE CONSTRUCTION. SUBMIT ALL MODIFICATION TO DESIGN ENGINEER FOR APPROVAL.
10. DUCT TRANSITIONS SHALL BE CONSTRUCTED WITH SLOPE OF 1/4.
11. TURNING VANES SHALL BE PROVIDED IN ALL SUPPLY DUCT RECTANGULAR ELBOWS WITH ANGLES BETWEEN 15 DEGREES AND LESS THAN 90 DEGREES PER THE SMACNA HVAC DUCT CONSTRUCTION STANDARDS MANUAL.
12. DUCT DIMENSIONS SHOWN ON DRAWING ARE CLEAR INSIDE DIMENSIONS. WHERE DUCT LINER IS SHOWN INCREASE METAL DUCT SIZE TO ALLOW FOR DUCT LINER.
13. UNLESS OTHERWISE NOTED, INSTALL DUCTWORK AS HIGH AS POSSIBLE, TIGHT TO BOTTOM OF STRUCTURE. COORDINATE DUCT ELEVATION WITH STORM LEADERS, WATER PIPING, SANITARY DRAINS ,MAJOR ELECTRICAL CONDUIT, LIGHTING FIXTURES, ETC..

SUBMITTED FOR 100% CONSTRUCTION DOCUMENTS

HALL & OGLE ARCHITECTS, INC.
208 MAGNOLIA AVENUE
DAYTONA BEACH, FLORIDA 32114
www.hoarchitects.com
PH (386) 255-6163
FAX (386)257-5650
AA-C000925

DELOSE O'NEAL ENGINEERING
PO. BOX 530247
DeBary, FL 32753
P (407) 764-2813
C (321) 277-4128
CONSULTANTS

MINDY N. O'NEAL
FL# 69779

REVISIONS

NO.	DATE	DESCRIPTION

DOCUMENT HISTORY

Replacement Fire Station # 96
City of Holly Hill, Fl.
1020 Daytona Avenue
Holly Hill , Florida

ARCH/ENGR OF RECORD
MINDY N. O'NEAL
FL# 69779

DESIGNED BY	DRAWN BY
MNO	KMO
ISSUE DATE	AE PROJECT NUMBER
18-MAY-2023	2204

SHEET TITLE
MECHANICAL GENERAL INFORMATION

DRAWING NO.
M0.1

Attachment: Exhibit C - Fire Station #96 Bid Set (2023-R-55 : Fire Station Construction)

OUTSIDE AIR CALCULATION

AREA SERVED	AREA (SQFT)	# PEOPLE	CFM / PERSON	PEOPLE OUTSIDE AIR (CFM)	CFM /SQFT	SQ.FT. OUTSIDE AIR (CFM)	TOTAL CFM CALCULATED	CFM SUPPLIED
101 RECEPTION	203	6	5	30	.06	12	42	90
102 CORRIDOR	115	-	-	-	.06	7	7	20
103 STORAGE	82	-	-	-	.12	10	10	20
106 CHIEF'S OFFICE	258	2	5	10	.06	15	25	50
108 STORAGE	75	-	-	-	.12	9	9	20
109 LIVING AREA	571	10	5	50	.06	34	84	100
111 KITCHEN	231	4	7.5	30	.12	28	58	75
112 WORK STATIONS	131	3	5	15	.06	8	23	50
113 CORRIDOR	115	-	-	-	.06	7	7	20
116 CORRIDOR	162	-	-	-	.06	10	10	10
117 LTS OFFICE	108	2	5	10	.06	6	16	50
118 LTS BUNK RM.	108	2	5	10	.06	6	16	20
119 BUNK RM.	79	2	5	10	.06	5	15	20
120 BUNK RM.	79	2	5	10	.06	5	15	20
121 BUNK RM.	79	2	5	10	.06	5	15	20
123 UNIFORM STOR.	97	-	-	-	.06	6	6	10
124 GEAR STORAGE	75	-	-	-	.06	5	5	20
126 MEZZ. STORAGE	148	-	-	-	.06	9	9	10
127 PHYS. TRAINING	328	4	20	80	.06	20	100	150
128 LAUNDRY	77	2	7.5	15	.12	9	24	50
129 BIO HAZARD	129	3	5	15	.18	23	38	75
CORRIDOR	46	-	-	-	.06	3	3	5
130 MEZZ. STORAGE	481	-	-	-	.06	29	29	30
						TOTAL	566	1015

PER TABLE 403.3.1.1 - 2020 FLORIDA BUILDING CODE, 7TH EDITION - MECHANICAL
BALANCE TO OUTSIDE QUANTITIES AIR SHOWN.

KITCHEN HOOD SCHEDULE

SERVICE	CFM	DIMENSIONS			MANUFACTURER	MODEL	NOTES
		LENGTH	DEPTH	HEIGHT			
KH-1	510	36"	19.5"	10.5"	GREENHECK	GRRS-W-36-T-G	1 - 5

NOTES
1. UNIT SHALL BE U.L. 300A AND ETL LISTED AND NFPA 101 COMPLIANT.
2. UNIT SHALL HAVE INTEGRAL PRE-CHARGED FIRE SUPPRESSION SYSTEM WITH SIGNAL OUTPUT TO BUILDING FIRE ALARM SYSTEM.
3. UNIT SHALL HAVE RELAY TO DISRUPT COOKING APPLIANCE POWER DURING FIRE ALARM ACTIVATION.
4. PROVIDE WITH REMOTE MOUNTED MANUAL PULL STATION FOR FIRE SUPPRESSION SYSTEM.
5. PROVIDE HOOD WITH OPTIONAL POWER DISCONNECT TOGGLE SWITCH AND RANGE TIME-OUT MODULE.

GRAVITY ROOF VENT SCHEDULE

TYPE	CFM	SERVICE	THROAT AREA	MANUFACTURER	MODEL	NOTES
GIV-1	605	OUTSIDE AIR	1.12	GREENHECK	GRSI-15	1,2
GRV-1	510	EXHAUST AIR	0.57	GREENHECK	GRSR-10	1,2
GRV-2	440	EXHAUST AIR	0.57	GREENHECK	GRSR-10	1,2

NOTES:
1. PROVIDE MANUFACTURER'S ROOF CURB. COORDINATE WITH ROOF TYPE.
2. PROVIDE INSECT SCREEN.

AIR DEVICE SCHEDULE

TAG	MFG./CAT. #	TYPE	NECK	FRAME	FINISH	NOTES
A	METAL AIRE 5700-AL	CD	SEE PLANS	12 x 12	BAK. WHT. ENAMEL	1,2,3,4,5
			SEE PLANS	24 x 24		
B	METAL AIRE CCS	RAR	22 x 22 (MAX 1280 CFM)	24 x 24	BAK. WHT. ENAMEL	1,2,4,6
C	METAL AIRE RH	EAR/RAR	SEE PLANS	SEE PLANS	BAK. WHT. ENAMEL	1,2,4,6
D	METAL AIRE VH	SAR	SEE PLANS	SEE PLANS	BAK. WHT. ENAMEL	1,2,4,6

DEVICE TYPE LEGEND:
CD = CEILING DIFFUSER
RAR = RETURN AIR REGISTER
EAR = EXHAUST AIR REGISTER
SAR = SUPPLY AIR REGISTER

NOTES:
1. PROVIDE CEILING DEVICES WITH PROPER FRAME STYLE TO MATCH CEILING TYPE AS CALLED FOR BY ARCHITECT.
2. DEVICES SHALL BE PROVIDED WITH FACTORY FINISH.
3. CEILING DIFFUSERS SHALL BE 4-WAY THROW UNLESS NOTED OTHERWISE OR SHOWN ON PLANS WITH DIRECTIONAL ARROW(S).
4. IF NECESSARY, PROVIDE TOP HAT FOR GRILLES REGISTERS AND DIFFUSERS.
5. PROVIDE EQUALIZING GRID (PRICE MODEL FR). FOR DIFFUSERS TAPPED DIRECTLY FROM BOTTOM OF DUCT, PROVIDE OPPOSED BLADE DAMPER.
6. PROVIDE OPPOSED BLADE DAMPER FOR REGISTERS.

SPLIT SYSTEM AIR CONDITIONING UNIT SCHEDULE

MARK	AREA SERVED	NOMINAL TONS	INDOOR UNIT										COOLING CAPACITY		OUTDOOR UNIT					EQUAL TO		NOTES
			FAN				ELECTRIC HEATER		UNIT POWER			WEIGHT (LBS.)	TC (MBH)	SC (MBH)	UNIT POWER			WEIGHT (LBS.)	SEER2 [EER2]	MFG.	MODEL (INDOOR/OUTDOOR)	
			CFM	O/A	E.S.P. (IN.)	HP	KW	CONTROL STAGES	V/Ø	MCA	MOCP				V/Ø	MCA	MOCP					
AHU-1 / CU-1	RECEPTION/ADMN.	3.5	1,400	240	0.8	1	8	1	208/1	42	45	175	42.6	32.8	208/1	25	35	225	15.6	LENNOX	CBA25UHV042 / ML17XC1042	1 - 12
AHU-2 / CU-2	LIVING AREA	5	2,000	365	0.8	1	10	1	208/1	52	60	200	58.5	45.3	208/1	36	50	260	14.4	LENNOX	CBA25UHV060 / ML17XC1059	1 - 13

NOTES:
1. PROVIDE UNITS WITH PROGRAMMABLE FACTORY THERMOSTAT.
2. PROVIDE 5 MINUTE ANTI CYCLE TIMER.
3. PROVIDE UNIT WITH HAIL GUARD.
4. PROVIDE SMOKE DETECTOR IN SUPPLY DUCT AS INDICATED ON PLANS.
5. PROVIDE WITH MANUFACTURER'S MOTOR AND DRIVE PACKAGE AS REQUIRED TO MEET SCHEDULED AIR CAPACITIES AND PRESSURE DROP.
6. PROVIDE UNITS WITH WATER-LEVEL MONITORING DEVICE.
7. PROVIDE MANUFACTURER RECOMMENDED CONDENSATE PUMP SYSTEM FOR EACH AIR HANDLING UNIT.
8. PROVIDE UNITS COASTAL CORROSION PROTECTION.
9. PROVIDE CONTROLS TO ACTUATE OUTSIDE AIR CONTROL DAMPER OPEN UPON UNIT ACTIVATION AND CLOSE WHEN UNIT IF OFF.
10. PROVIDE UNITS WITH MANUFACTURER DEHUMIDIFICATION SYSTEM.
11. PROVIDE CONSTRUCTION FILTERS FOR RETURN AIR OPENINGS DURING INSTALLATION. REPLACE FILTERS USED DURING CONSTRUCTION WITH NEW FILTERS.
12. BALANCE EACH AIR SYSTEM TO OUTSIDE QUANTITIES SHOWN.
13. PROVIDE WITH MANUFACTURERS STANDARD AIR ECONOMIZER WITH ENTHALPY CONTROLS

FAN SCHEDULE

MARK	SERVICE	CFM	EXT. STATIC PRESSURE (IN. WATER)	FAN TYPE	DRIVE	SONES	HP (WATTS)	RPM	V/Ø	MANUFACTURER	MODEL	NOTES
EF-1	107 TOILET	100	0.375	CEILING	DIRECT	1.5	128 WATTS	750	120/1	GREENHECK	SPB-150	1,2,3,6
EF-2	108 CUSTODIAL	100	0.375	CEILING	DIRECT	1.5	128 WATTS	750	120/1	GREENHECK	SPB-150	1,2,3,6
EF-3	114 WOMEN	120	0.375	CEILING	DIRECT	0.7	23 WATTS	1118	120/1	GREENHECK	SP-A190	1,2,3,6
EF-4	115 MEN	120	0.375	CEILING	DIRECT	0.7	23 WATTS	1118	120/1	GREENHECK	SP-A190	1,2,3,6
EF-5	124 GEAR STORAGE	200	0.375	ROOFTOP	DIRECT	0.7	1/10	1335	120/1	GREENHECK	G-080-VG	1,2,3,6
EF-6	128 APPARATUS	1,200	0.375	ROOFTOP	DIRECT	9.0	1/4	1200	120/1	GREENHECK	G-120-VG	1,6,7,8
EF-7	129 BIO-HAZARD	120	0.375	CEILING	DIRECT	0.7	23 WATTS	1118	120/1	GREENHECK	SP-A190	1,2,3,6
EF-8	KITCHEN HOOD	510	0.375	INLINE	DIRECT	7.2	1/6	1450	120/1	GREENHECK	SQ-95-VG	1,5,6

NOTES:
1. PROVIDE INTEGRAL DISCONNECT SWITCH.
2. PROVIDE MANUFACTURER'S SPEED CONTROL MOUNTED AT UNIT.
3. PROVIDE CONTROL BY MANUAL LIGHT WITH OCCUPANCY SENSOR. COORDINATE WITH ELECTRICAL DRAWINGS FOR LOCATION OF SWITCH.
4. FAN SHALL OPERATE VIA THERMOSTAT SET AT 85°F.
5. INTERLOCK FAN WITH HOOD CONTROL PANEL.
6. PROVIDE INTEGRAL BACKDRAFT DAMPER.
7. PROVIDE INTERLOCK WITH MOTORIZED DAMPER AT AIR INTAKE LOUVER
8. PROVIDE CONTROL OPERATION FROM TIME CLOCK.

MINI-SPLIT SYSTEM AIR CONDITIONING UNIT SCHEDULE

MARK	AREA SERVED	NOMINAL TONS	FAN		MCA	MOCP	WEIGHT (LBS.)	COOLING CAPACITY		SEER [EER]	EQUAL TO			NOTES
			CFM	V/Ø				TC (MBH)	SC (MBH)		MFG.	MODEL		
AC-1	104 ELEC. / DATA	1.0	317	208/1	1.0	15	25	-	-	-	LG	LSN090HSV5		SEE NOTES
ACU-1	104 ELEC. / DATA	1.0	-	208/1	10	15	75	9.0	7.2	[14.5]	LG	LSU090HSV5		SEE NOTES
AC-2	128 LAUNDRY	1.0	317	208/1	1.0	15	25	-	-	-	LG	LSN090HSV5		SEE NOTES
ACU-2	128 LAUNDRY	1.0	-	208/1	10	15	75	9.0	7.2	[14.5]	LG	LSU090HSV5		SEE NOTES
AC-3	129 EMS/BIO	1.0	317	208/1	1.0	15	25	-	-	-	LG	LSN090HSV5		SEE NOTES
ACU-3	129 EMS/BIO	1.0	-	208/1	10	15	75	9.0	7.2	[14.5]	LG	LSU090HSV5		SEE NOTES

NOTES:
1. PROVIDE UNITS WITH FACTORY THERMOSTAT, SINGLE POINT ELECTRICAL CONNECTION.
2. PROVIDE 5 MINUTE ANTI CYCLE TIMER.
3. PROVIDE WITH FACTORY INSTALLED DISCONNECT.
4. PROVIDE UNIT WITH HAIL GUARD.
5. PROVIDE UNIT WITH CONDENSATE PUMP.
6. CFM BASED ON MEDIUM FAN SPEED.
7. BALANCE TO REQUIRED OUTSIDE AIR QUANTITY.

LOUVER SCHEDULE

MARK	SERVICE	SIZE		BIRD SCREEN	DESIGN EQUIPMENT	MODEL NO.	REMARKS
		LENGTH (IN)	HEIGHT (IN)				
L-1	SEE PLANS	40	20	YES	GREENHECK	ESD-435	1, 2

NOTES:
1. PROVIDE HORIZONTAL, DRAINABLE ALUMINUM, BAKED ENAMEL FINISH.
2. MATCH COLOR OF LOUVER TO ADJACENT WALL COLOR.

ENGINE EXHAUST SYSTEM SCHEDULE

MARK	MOTOR HP	V/Ø	FL AMPS	DIMENSIONS (L x W x H)	WEIGHT (LBS)	MANUFACTURER	MODEL	NOTES
AV-1	3/4	120/1	13.0	25" x 26" x 35"	190	AIR VACUUM CORPORATION	AIRVAC 911	1 - 5
AV-2	3/4	120/1	13.0	25" x 26" x 35"	190	AIR VACUUM CORPORATION	AIRVAC 911	1 - 5

NOTES:
1. PROVIDE WITH AVEC SMART TIMER ZONE CONTROL.
2. PROVIDE WITH STANDARD MAGNETIC DOOR SWITCH WITH PHOTOELECTRIC EYE.
3. INSTALL PER MANUFACTURE'S RECOMMENDATIONS.
4. MOUNT TO STRUCTURE PER MANUFACTURER'S RECOMMENDATIONS.

SUBMITTED FOR 100% CONSTRUCTION DOCUMENTS

HALL & OGLE ARCHITECTS, INC.
208 MAGNOLIA AVENUE
DAYTONA BEACH, FLORIDA 32114
www.hoarchitects.com
PH (386) 255-6163
FAX (386)257-5650
AA-C000925

DELOSE O'NEAL ENGINEERING CONSULTANTS
PO. BOX 530347
DeBary, FL 32753
P (407) 764-2913
C (321) 277-4128

REVISIONS

NO.	DATE	DESCRIPTION
		DOCUMENT HISTORY

MINDY N. O'NEAL
FL# 69779

Replacement Fire Station # 96
City of Holly Hill, Fl.
1020 Daytona Avenue
Holly Hill , Florida

ARCH/ENGR OF RECORD
MINDY N. O'NEAL
FL# 69779

DESIGNED BY	DRAWN BY
MNO	KMO
ISSUE DATE	AE PROJECT NUMBER
18-MAY-2023	2204

SHEET TITLE
MECHANICAL SCHEDULES

DRAWING NO.
M0.2

Attachment: Exhibit C - Fire Station #96 Bid Set (2023-R-55 : Fire Station Construction)

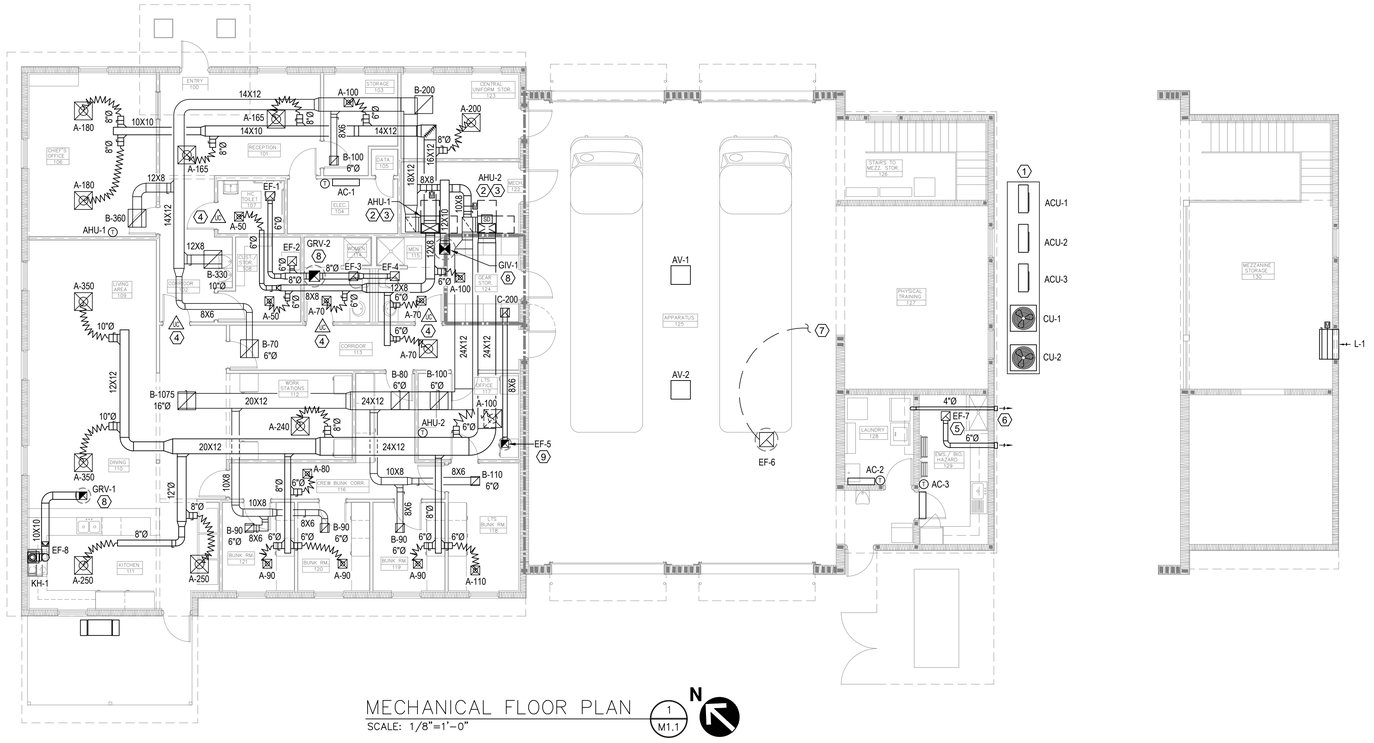

MECHANICAL FLOOR PLAN (1 / M1.1)
SCALE: 1/8"=1'-0"

N

GENERAL PLAN NOTES:

1. CONTRACTOR SHALL FIELD VERIFY ALL EXISTING CONDITIONS WITHIN THE AREA OF WORK PRIOR TO CONSTRUCTION.
2. COORDINATE EXACT LOCATIONS OF MECHANICAL EQUIPMENT WITH ALL DISCIPLINES AND MAINTAIN REQUIRED CLEARANCES.
3. INSTALL FLEXIBLE CONNECTIONS BETWEEN ALL DUCTWORK AND MECHANICAL UNITS.
4. DUCTWORK CONNECTIONS TO EQUIPMENT TO BE SIZE OF UNIT OPENING.
5. PROVIDE BRANCH DUCT CONNECTIONS PER DETAIL ON SHEET M5.1.
6. COORDINATE ALL BRANCH DUCT LOCATIONS WITH STRUCTURE.

MECHANICAL PLAN KEY NOTES:

(1) PROVIDE NEW CONCRETE HOUSEKEEPING PAD.CONTRACTOR TO VERIFY EXACT LOCATION AND COORDINATE WITH ALL DISCIPLINES.

(2) ROUTE CONDENSATE DRAIN PIPING TO EXTERIOR LANDSCAPING AND TERMINATE AT LEAST 3" ABOVE GRADE.

(3) ROUTE REFRIGERANT PIPING TO ASSOCIATED CONDENSING UNIT AT THE BUILDING EXTERIOR. REFER TO REFRIGERANT PIPING SCHEMATIC DETAIL ON MECHANICAL DETAIL SHEET. COORDINATE EXACT LOCATION WITH ARCHITECTURAL PLANS.

(4) UNDERCUT DOOR 1" TO ALLOW FOR TRANSFER OF AIR.

(5) 6"Ø EXHAUST VENT TO TERMINATE AT LOCATION SHOWN WITH MANUFACTURER'S RECOMMENDED WALL CAP AND GRAVITY DAMPER.

(6) PROVIDE 4"Ø DRYER VENT AND TERMINATE AT LOCATION SHOWN WITH MANUFACTURER'S RECOMMENDED WALL CAP AND GRAVITY DAMPER.

(7) INTERLOCK EXHAUST FAN CONTROLS WITH INTAKE AIR LOUVER L-1.

(8) UP TO GRAVITY VENTILATOR ON ROOF ABOVE.

(9) EXHAUST DUCT UP TO EF-5 ON ROOF ABOVE.

SUBMITTED FOR 100% CONSTRUCTION DOCUMENTS

GRAPHIC SCALE
4' 0 5' 10' 15' 20'
1/8"=1'-0"

HALL & OGLE ARCHITECTS, INC.
208 MAGNOLIA AVENUE
DAYTONA BEACH, FLORIDA 32114
www.hoarchitects.com
PH (386) 255-6163
FAX (386)257-5650
AA-C000925

DELOSE O'NEAL ENGINEERING
PO. BOX 530247
DeBary, FL 32753
P (407) 766-2613
C (321) 277-4128
CONSULTANTS

MINDY N. O'NEAL
FL# 69779

REVISIONS

NO.	DATE	DESCRIPTION

DOCUMENT HISTORY

Replacement Fire Station # 96
City of Holly Hill, Fl.
1020 Daytona Avenue
Holly Hill , Florida

ARCHENGR OF RECORD
MINDY N. O'NEAL
FL# 69779

DESIGNED BY	DRAWN BY
MNO	KMO
ISSUE DATE	AE PROJECT NUMBER
18-MAY-2023	2204

SHEET TITLE
MECHANICAL FLOOR PLAN

DRAWING NO.
M1.1

Attachment: Exhibit C - Fire Station #96 Bid Set (2023-R-55 : Fire Station Construction)

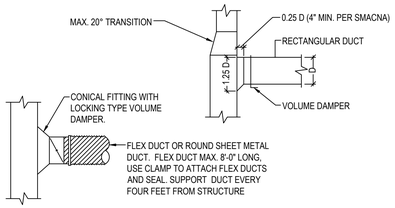

1 Branch Duct Detail
SCALE: NOT TO SCALE

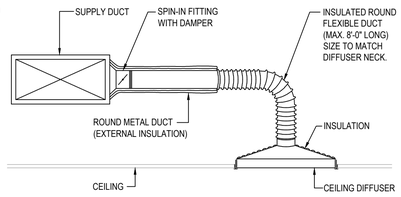

2 Ceiling Diffuser Runout Detail
SCALE: NOT TO SCALE

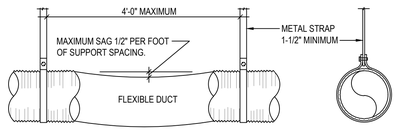

NOTES:
1. DUCT SHOULD EXTEND STRAIGHT FOR SEVERAL INCHES FROM A CONNECTION BEFORE BENDING.
2. SUPPORT SYSTEM MUST NOT DAMAGE DUCT OR CAUSE OUT OF ROUND SHAPE.

3 Flex Duct Support Detail
SCALE: NOT TO SCALE

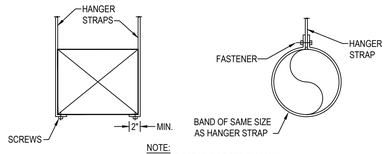

NOTE:
HANGER STRAP SIZE PER SMACNA.

4 Rectangular/Round Duct Hanger Detail
SCALE: NOT TO SCALE

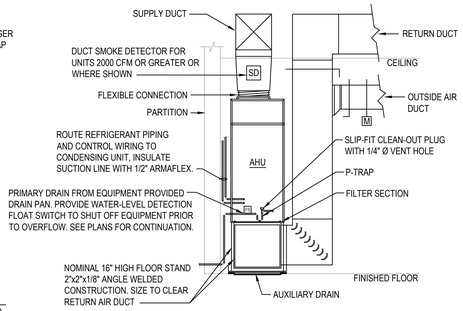

AUXILIARY AND SECONDARY DRAIN SYSTEMS SHALL BE INSTALLED IN ACCORDANCE WITH SECTION 307.2.3 OF THE FLORIDA BUILDING CODE 2020 SEVENTH EDITION - MECHANICAL

5 Vertical DX AHU Detail
SCALE: NOT TO SCALE

SMACNA TABLE 5-1

RECTANGULAR DUCT HANGERS (MIN. SIZE)		
MAX. HALF OF DUCT PERIMETER	PAIR AT 8 FT SPACING	
	STRAP	WIRE / ROD
P/2 = 30"	1" x 22 ga.	10 ga. (.135")
P/2 = 72"	1" x 20 ga.	1/4"
P/2 = 96"	1" x 18 ga.	3/8"
P/2 = 120"	1" x 16 ga.	3/8"
P/2 = 168"	1-1/2" x 16 ga.	1/2"
P/2 = 192"	1-1/2" x 16 ga.	1/2"
P/2 = 193" UP	SPECIAL ANALYSIS REQUIRED	
WHEN STRAPS ARE LAP JOINED USE THESE MINIMUM FASTENERS. 1" x 18, 20, 22 ga., - TWO #10 OR ONE 1/4" BOLT 1" x 16 ga. - TWO 1/4" DIA. 1-1/2" x 16 ga. - TWO 3/8" DIA. PLACE FASTENERS IN SERIES, NOT SIDE BY SIDE		

SINGLE HANGER MAXIMUM ALLOWABLE LOAD	
STRAP	WIRE OR ROD (DIA.)
1" x 22 ga. - 260 LBS. 1" x 20 ga. - 320 LBS. 1" x 18 ga. - 420 LBS. 1" x 16 ga. - 700 LBS. 1-1/2" x 16 ga. - 1100 LBS.	0.106" - 80 LBS. 0.135" - 120 LBS. 0.162" - 160 LBS. 1/4" - 270 LBS 3/8" - 680 LBS. 1/2" - 1250 LBS. 5/8" - 2000 LBS. 3/4" - 3000 LBS.

NOTES:
1. DIMENSIONS OTHER THAN GAGE ARE IN INCHES.
2. TABLE ALLOWS FOR DUCT WEIGHT, 1 LB/SF INSULATION WEIGHT AND NORMAL REINFORCEMENT AND TRAPEZE WEIGHT, BUT NO EXTERNAL LOADS.
a. FOR CUSTOM DESIGN OF HANGERS, DESIGNERS MAY CONSULT SMACNA'S RECTANGULAR INDUSTRIAL DUCT STANDARDS, THE AISI COLD FORMED STEEL DESIGN MANUAL AND THE AISC STEEL CONSTRUCTION MANUAL.
b. STRAPS ARE GALVANIZED STEEL; OTHER MATERIALS ARE UNCOATED STEEL.
c. ALLOWABLE LOADS FOR P/2 ASSUME THAT DUCTS ARE 16 ga. MAXIMUM, EXCEPT THAT WHEN MAXIMUM DUCT DIMENSION (W) IS OVER 60" THEN P/2 MAXIMUM IS 1.25 w.
d. 12, 10 OR 8 ga. WIRE IS STEEL OF BLACK ANNEALED, BRIGHT BASIC OR GALVANIZED TYPE.

6 Rectangular Duct Hangers
SCALE: NOT TO SCALE

SMACNA TABLE 5-2

ROUND DUCT HANGERS (MIN. SIZE)				
DIA.	MAXIMUM SPACING	WIRE DIA.	ROD	STRAP
10" DN	12"	(1) 12 ga.	1/4"	1" x 22 ga.
11" - 18"	12"	(2) 12 ga. OR (1) 8 ga.	1/4"	1" x 22 ga.
19" - 24"	12"	(2) 10 ga.	1/4"	1" x 22 ga.
25" - 36"	12"	(2) 8 ga.	3/8"	1" x 20 ga.
37" - 50"	12"	-	(2) 3/8"	(2) 1" x 20 ga.
51" - 60"	12"	-	(2) 3/8"	(2) 1" x 18 ga.
61" - 84"	12"	-	(2) 3/8"	(2) 1" x 16 ga.

NOTES:
1. STRAPS ARE GALVANIZED STEEL: RODS ARE UNCOATED OR GALVANIZED STEEL; WIRE IS BLACK ANNEALED, BRIGHT BASIC, OR GALVANIZED STEEL. ALL ARE ALTERNATIVES.
a. TABLE ALLOWS FOR CONVENTIONAL WALL THICKNESS, AND JOINT SYSTEMS PLUS ONE LB/SF INSULATION WEIGHT. IF HEAVIER DUCTS ARE TO BE INSTALLED, ADJUST HANGER SIZES TO BE WITHIN THEIR LOAD LIMITS. HANGER SPACING MAY BE ADJUSTED BY SPECIAL ANALYSIS.
b. DESIGNERS: FOR INDUSTRIAL GRADE SUPPORTS, INCLUDING SADDLES, SINGLE LOAD TRAPEZE LOADS, LONGER SPANS AND FLANGE JOINT LOADS, SEE SMACNA'S ROUND INDUSTRIAL DUCT CONSTRUCTION STANDARDS.

7 Round Duct Hangers
SCALE: NOT TO SCALE

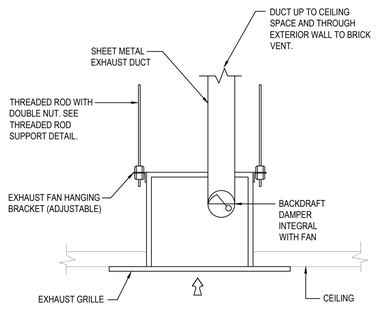

8 Ceiling Mounted Exhaust Fan
SCALE: NOT TO SCALE

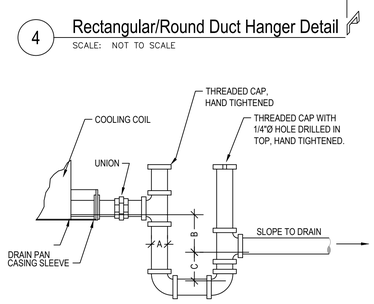

CONDENSATE DRAIN PIPING DIMENSIONS:

A = FULL SIZE OF UNIT DRAIN CONNECTION
B ≥ 1-1/2 TIMES FAN SUCTION STATIC PRESSURE
C ≥ FAN DISCHARGE STATIC PRESSURE PLUS 1/2 INCH

COORDINATE MOUNTING/CURB HEIGHT AS REQUIRED TO PROVIDE PROPER CONDENSATE DRAINAGE.

9 AHU Condensate Drain Trap Detail
SCALE: NOT TO SCALE

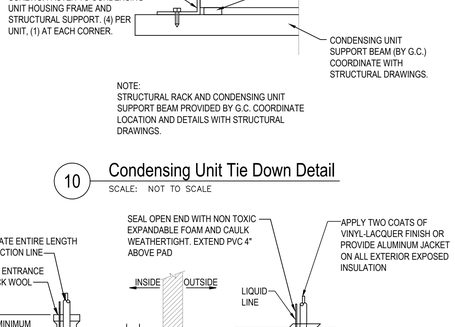

NOTE:
STRUCTURAL RACK AND CONDENSING UNIT SUPPORT BEAM PROVIDED BY G.C. COORDINATE LOCATION AND DETAILS WITH STRUCTURAL DRAWINGS.

10 Condensing Unit Tie Down Detail
SCALE: NOT TO SCALE

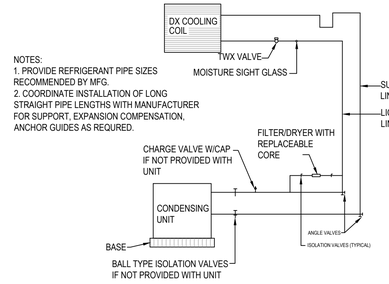

NOTES:
1. PROVIDE REFRIGERANT PIPE SIZES RECOMMENDED BY MFG.
2. COORDINATE INSTALLATION OF LONG STRAIGHT PIPE LENGTHS WITH MANUFACTURER FOR SUPPORT, EXPANSION COMPENSATION, ANCHOR GUIDES AS REQURED.

NOTE:
PIPING LAYOUT IS DIAGRAMMATIC. CONTRACTOR SHALL PROVIDE PIPING, ACCESSORIES, VALVES, ETC. TO ACCOMMODATE LAYOUT IN FIELD.

11 Refrigerant Piping Schematic Detail
SCALE: NOT TO SCALE

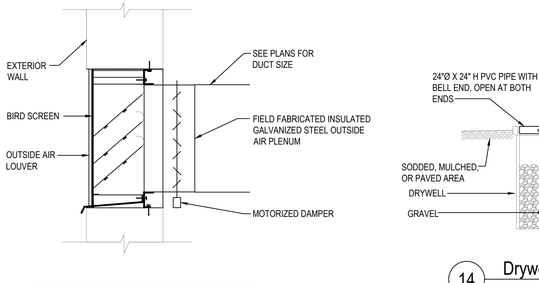

1. INSTALL LOUVER PER MANUFACTURER'S REQUIREMENTS.
2. COORDINATE FRAME TYPE WITH WALL CONSTRUCTION TYPE.
3. MOTORIZED DAMPER.

12 Outside Air Louver Detail
SCALE: NOT TO SCALE

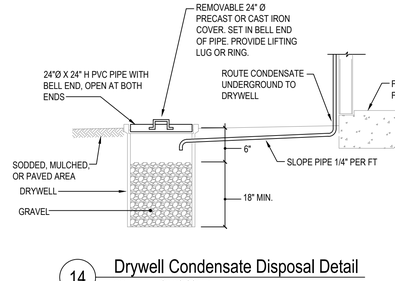

14 Drywell Condensate Disposal Detail
SCALE: NOT TO SCALE

NOTE:
ALL REFRIGERANT LINES INSTALLED UNDERGROUND/BELOW GRADE SHALL BE PRESSURE TESTED TO A MINIMUM OF 300 PSI AND SHALL BE DOCUMENTED.

15 Underground Refrigerant Lines Detail
SCALE: NOT TO SCALE

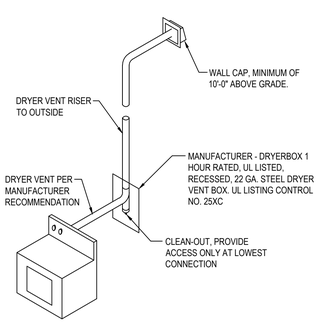

16 Dryer Vent Connection Detail
SCALE: NOT TO SCALE

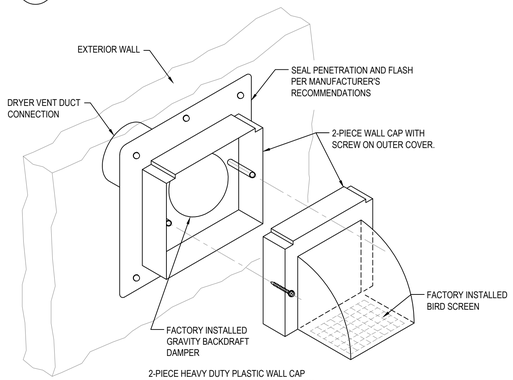

2-PIECE HEAVY DUTY PLASTIC WALL CAP PER MANUFACTURER'S RECOMMENDATION. PROVIDE FACTORY INSTALLED BACKDRAFT DAMPER FOR DRYER VENT AN RESTROOM FANS.

17 Typical Wall Cap Detail
SCALE: NOT TO SCALE

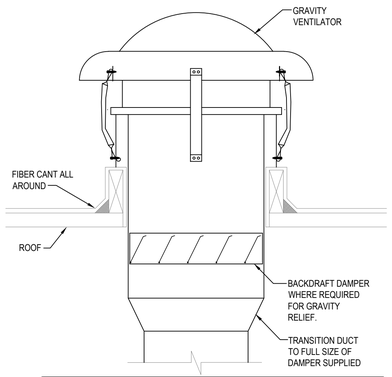

NOTE:
CONTRACTOR TO PROVIDE ENGINEERED TIE-DOWN SOLUTION IN ACCORDANCE WITH SECTION 301.15 OF THE 2017 FLORIDA BUILDING CODE- MECHANICAL, SIXTH EDITION. PROVIDE A SIGNED AND SEALED CONNECTION DESIGN PER MANUFACTURERS SPECIFICATIONS PRIOR TO INSTALLATION. (3) COPIES OF PRODUCT APPROVAL INFORMATION TO BE SUPPLIED FOR MANUFACTURERS ENGINEERED TIE-DOWN SYSTEM.

18 Gravity Ventilator - Roof Mounted
SCALE: NOT TO SCALE

SUBMITTED FOR 100% CONSTRUCTION DOCUMENTS

HALL & OGLE ARCHITECTS, INC.
208 MAGNOLIA AVENUE
DAYTONA BEACH, FLORIDA 32114
PH (386) 255-6163
FAX (386)257-5650
AA-C000925
www.hoarchitects.com

DELOSE O'NEAL ENGINEERING
PO. BOX 530247
DeBary, FL 32753
P (407) 764-2813
C (321) 277-4128
CONSULTANTS

MINDY N. O'NEAL
FL# 69779

REVISIONS

NO.	DATE	DESCRIPTION

Replacement Fire Station # 96
City of Holly Hill, Fl.
1020 Daytona Avenue
Holly Hill , Florida

ARCH/ENGR OF RECORD
MINDY N. O'NEAL
FL# 69779

DESIGNED BY	DRAWN BY
MNO	KMO
ISSUE DATE	AE PROJECT NUMBER
18-MAY-2023	2204

SHEET TITLE
MECHANICAL DETAILS

DRAWING NO.
M5.1

Attachment: Exhibit C - Fire Station #96 Bid Set (2023-R-55 : Fire Station Construction)

HOOD INFORMATION

QTY.	MARK	MODEL	HOOD DIMENSIONS (IN.)			HOOD CONSTR.	EXHAUST			VENTILATION INFORMATION		LIGHTING DETAILS		TOTAL WEIGHT LBS.
			LENGTH	WIDTH	HEIGHT		CFM	COLLAR DIA.	COLLAR S.P.	VENTILATION STYLE	FAN TYPE	FIXTURE TYPE BULB / LAMP INFO	QTY.	
1	KH-1	GRRS	36	TOP 11.8 BOT 19.4	10.5	SS	510	6.56	0.65	INTERIOR FAN - SIDE DISCHARGE	INLINE	INCANDESCENT 60W A19 (SHATTER PROOF)	1	75

HOOD OPTIONS

- ETL LISTED TO UL 300A STANDARD
- NFPA101 SPECIFICATION
- CLOCKBOX
- MANUAL PULL STATION KIT
- NSF
- ELECTRIC DISCONNECT FOR APPLIANCE
- FIRE SYSTEM PERMIT AND TEST (EXCLUDES FULL DUMP TEST)

ELECTRICAL CONNECTION OVERVIEW

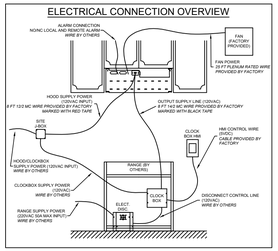

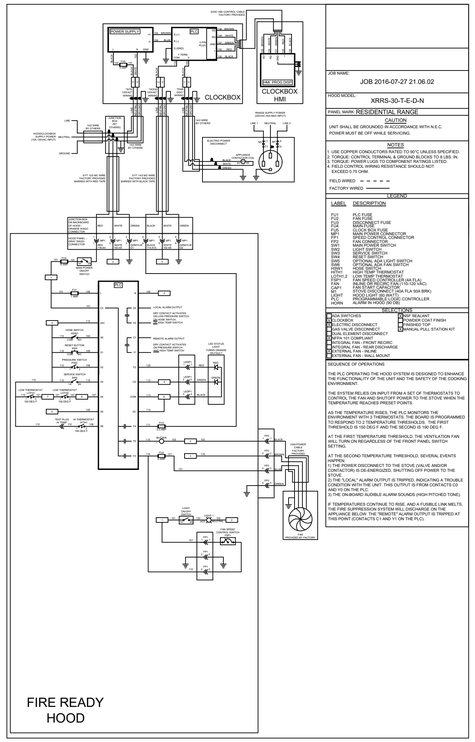

JOB NAME: JOB 2016-07-27 21.06.02

HOOD MODEL: XRRS-30-T-E-D-N

PANEL MARK: RESIDENTIAL RANGE

CAUTION

UNIT SHALL BE GROUNDED IN ACCORDANCE WITH N.E.C. POWER MUST BE OFF WHILE SERVICING.

NOTES

1. USE COPPER CONDUCTORS RATED TO 90°C UNLESS SPECIFIED.
2. TORQUE: CONTROL TERMINAL & GROUND BLOCKS TO 7 LBS. IN.
3. TORQUE: POWER LUGS TO COMPONENT RATINGS LISTED
4. MAXIMUM WIRING RESISTANCE SHOULD NOT EXCEED 0.75 OHM.

FIELD WIRED = = = = =

FACTORY WIRED ———

LEGEND

LABEL	DESCRIPTION
FU1	PLC FUSE
FU2	FAN FUSE
FU3	CONVENIENCE FUSE
FU4	LIGHT BULB FUSE
MP1	MAIN POWER CONNECTOR
MP2	FAN POWER CONNECTOR
FR1	FAN CONTACTOR
SW1	FAN SPEED SWITCH
SW2	LIGHT SWITCH
SW3	POWER SWITCH
SW4	RESET SWITCH
SW5	OPTIONAL ADA LIGHT SWITCH
HSW1	HIGH TEMP THERMOSTAT
HSW2	HIGH TEMP THERMOSTAT
LOTH1,2	LOW TEMP THERMOSTAT
FAN	FAN MOTOR (SEE SCHEDULE FOR FLA)
LAMP	INCANDESCENT BULB(S) (115-120 VAC)
CR1	CONTACTOR (SEE DATA FLA 50A BRK)
DISC	DISCONNECT (OPTIONAL)
PLC	PROGRAMMABLE LOGIC CONTROLLER
HORN	ALARM IN HOOD (90 DB)

SELECTIONS

- ADA SWITCHES
- CLOCK
- ELECTRIC DISCONNECT
- MANUAL PULL STATION
- NON-ELEMENT DISCONNECT
- NSF COMPLIANT
- PLENUM RATED COMPLIANT WIRING
- INTEGRAL FAN - REAR DISCHARGE
- INTEGRAL FAN - SIDE
- EXTERNAL FAN - WALL MOUNT
- SS/P SEALANT
- SS/P DULL FINISH
- TAPERED TOP
- MANUAL PULL STATION KIT

SEQUENCE OF OPERATIONS

THE PLC OPERATING THE HOOD SYSTEM IS DESIGNED TO ENHANCE THE SAFETY AND FUNCTIONALITY OF THE UNIT AND THE SAFETY OF THE COOKING ENVIRONMENT.

THE SYSTEM RELIES ON INPUT FROM A SET OF THERMOSTATS TO CONTROL THE FAN AND SHUTOFF POWER TO THE STOVE WHEN THE TEMPERATURE REACHES PRESET POINTS.

AS THE TEMPERATURE RISES, THE PLC MONITORS THE ENVIRONMENT WITH 3 THERMOSTATS. THE BOARD IS PROGRAMMED TO RESPOND TO 2 TEMPERATURE THRESHOLDS. THE FIRST THRESHOLD IS 150 DEG F AND THE SECOND IS 190 DEG F.

AT THE FIRST TEMPERATURE THRESHOLD, THE VENTILATION FAN WILL TURN ON REGARDLESS OF THE FRONT PANEL SWITCH SETTING.

AT THE SECOND TEMPERATURE THRESHOLD, SEVERAL EVENTS OCCUR:

1) THE POWER DISCONNECT TO THE STOVE (VALVE AND/OR CONTACTOR) IS DE-ENERGIZED, SHUTTING OFF POWER TO THE STOVE.
2) THE "LOCAL" ALARM OUTPUT IS TRIPPED, INDICATING A TROUBLE CONDITION WITH THE UNIT. THIS OUTPUT IS FROM CONTACTS C2 AND T2 ON THE PLC.
3) THE ON-BOARD AUDIBLE ALARM SOUNDS (HIGH PITCHED TONE)

IF TEMPERATURES CONTINUE TO RISE, AND A FUSIBLE LINK MELTS, THE FIRE SUPPRESSION SYSTEM WILL DISCHARGE ON THE APPLIANCE BELOW. THE "REMOTE" ALARM OUTPUT IS TRIPPED AT THIS POINT (CONTACTS C1 AND T1 ON THE PLC).

In-Line Exhaust Fan NFPA101

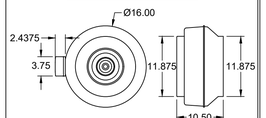

Included: 20ft Plenum rated wire - plug & play connection

ELECTRIC RANGE ELEMENT DISCONNECT

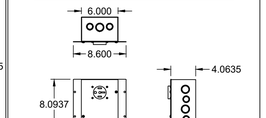

Included: 6ft Shielded control wire - plug & play connection

MOUNTING BRACKET

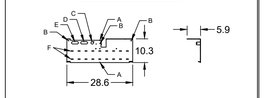

CLOCKBOX RANGE ELEMENT TIMER - DISPLAY INTERFACE MODULE (HMI)

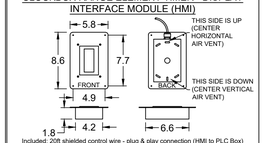

Included: 20ft shielded control wire - plug & play connection (HMI to PLC Box)

MOUNTING BRACKET: KEY
A. CENTER NOTCHES
B. CRITICAL MOUNTING POINTS (MUST BE SECURED TO STUDS OR D/W HANGERS)
C. REAR ACCESS TO JUNCTION BOX (NOT SHOWN)
D. PRIMARY ACCESS POINT FOR CONNECTIONS TO JUNCTION BOX (RECOMMENDED)
E. SECONDARY ACCESS POINT FOR CONNECTIONS TO HOOD (OPTIONS/ACCESSORIES)
F. ADITIONAL MOUNTING POINTS (SECURE MINIMUM OF 3 SCREWS PER ROW)

CLOCKBOX RANGE ELEMENT TIMER - PLC BOX

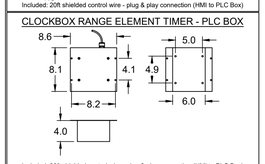

Included: 20ft shielded control wire - plug & play connection (HMI to PLC Box)

MANUAL PULL STATION KIT

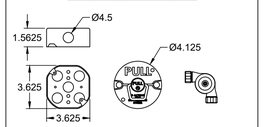

Included: 18ft braided metal rope 3 corner pulley's

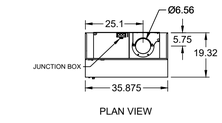

PLAN VIEW

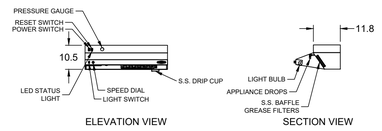

ELEVATION VIEW SECTION VIEW

MARK: KH-1

SUBMITTED FOR 100% CONSTRUCTION DOCUMENTS

HALL & OGLE ARCHITECTS, INC.
208 MAGNOLIA AVENUE
DAYTONA BEACH, FLORIDA 32114
www.hoarchitects.com
PH (386) 255-6163
FAX (386)257-5650
AA-C000925

DELOSE O'NEAL ENGINEERING
PO. BOX 530747 P (407) 766-2913
DeBary, FL 32753 C (321) 277-4128
CONSULTANTS

PROJECT: KH-1 THRU KH-4
MARK:

GREENHECK ENGINEER OFFICE

MINDY N. O'NEAL
FL# 69779

REVISIONS

NO.	DATE	DESCRIPTION

DOCUMENT HISTORY

Replacement Fire Station # 96
City of Holly Hill, Fl.
1020 Daytona Avenue
Holly Hill , Florida

ARCH/ENGR OF RECORD
MINDY N. O'NEAL
FL# 69779

DESIGNED BY	DRAWN BY
MNO	KMO
ISSUE DATE	AE PROJECT NUMBER
18-MAY-2023	2204

SHEET TITLE: MECHANICAL DETAILS

DRAWING NO.: M5.2

Attachment: Exhibit C - Fire Station #96 Bid Set (2023-R-55 : Fire Station Construction)

SYMBOLS AND ABBREVIATIONS

DESCRIPTION	ABBR.	SYMBOL
GREASE PIPE BELOW GRADE	GR	GR
SANITARY PIPE BELOW GRADE	SAN	
FORCE MAIN ABOVE GRADE	FM	FM
RAINWATER PIPE ABOVE GRADE	RW	RW
SECONDARY RAINWATER OVERFLOW	SRW	SRW
STORM WATER BELOW GRADE	ST	ST
FILTERED WATER	FW	FW
SOFT WATER	SW	SW
COLD WATER PIPE	CW	
HOT WATER PIPE	HW	
HOT WATER RETURN	HWR	
CONDENSATE PIPE	C	C
VENT PIPE	V	
GAS (NATURAL) PIPE	G	G
CLEANOUT	CO	
EXTERIOR CLEANOUT	ECO	
FLOOR CLEANOUT	FCO	
BACKWATER VALVE	BWV	
VENT THRU ROOF	VTR	
DIRECTION OF FLOW	-	
CAP	-	
TEE UP	-	
TEE DOWN	-	
ELBOW UP	-	
ELBOW DOWN	-	
REVISION REFERENCE	-	
NEW CONNECTION TO EXISTING	-	
HOSE BIBB / WALL HYDRANT	-	
WCO	-	
GAS COCK	-	
SOLENOID SHUT-OFF VALVE (W/ MANUAL RESET)	-	
PRESSURE REGULATOR	-	
PRESSURE REDUCING VALVE	-	
CHECK VALVE	-	
FLOOR DRAIN	-	
FLOOR DRAIN OR FLOOR SINK	-	
SHUT-OFF VALVE	-	
BALANCING VALVE	-	
UNION	-	
RECIRCULATING PUMP	-	
BACK OF HOUSE	BOH	

*SOME SYMBOLS SHOWN MAY NOT PERTAIN TO THIS PROJECT

PLUMBING GENERAL NOTES

1. CONTRACTOR SHALL COMPLY WITH ALL APPLICABLE CODES AND GOVERNING AUTHORITIES. I.E.: FLORIDA BUILDING CODE SEVENTH EDITION 2020 - PLUMBING.
2. ALL SANITARY PIPING 2-1/2" OR LESS SHALL HAVE A 1/4" PER FOOT SLOPE. ALL SANITARY PIPING 3" OR LARGER SHALL HAVE A 1/8" PER FOOT SLOPE UNLESS OTHERWISE NOTED. ALL STORM WATER PIPING 2-1/2" OR LESS SHALL HAVE A 1/4" PER FOOT MINIMUM HORIZONTAL SLOPE. ALL STORM WATER PIPING 3" OR LARGER SHALL HAVE A 1/8" PER FOOT MINIMUM HORIZONTAL SLOPE UNLESS OTHERWISE INDICATED.
3. VALVES AND FITTINGS SHALL BE OF SAME SIZE OF PIPE ON WHICH THEY ARE LOCATED, UNLESS OTHERWISE INDICATED ON DRAWINGS.
4. INSTALL WATER HAMMER SHOCK ARRESTORS AT EACH FIXTURE OR BATTERY OF FIXTURES WHERE REQUIRED. ARRESTORS SHALL BE FACTORY FABRICATED. INSTALL ARRESTORS AND SIZE PER PLUMBING AND DRAINAGE INSTITUTE STANDARD P.D.I. WH-201. ACCEPTABLE MANUFACTURERS: JOSAM, WATTS AND SIOUX CHIEF. AIR CHAMBERS SHALL NOT BE CONSIDERED AN EQUAL TO WATER ARRESTORS AS SPECIFIED.
5. CONTRACTOR IS RESPONSIBLE FOR MAINTAINING FIRE RATING AND WEATHERPROOFING INTEGRITY OF ALL PIPE PENETRATIONS.
6. ALL WATER SUPPLY AND SANITARY LINES SHALL RUN AS CLOSE TO PLANS AS POSSIBLE WITH NO CHANGES IN SIZING.
7. CONTRACTOR SHALL BE RESPONSIBLE FOR PROVIDING ALL NECESSARY SUPPORTING DEVICES FOR FIXTURES.
8. CHANGES IN THE DIRECTION OF SANITARY AND STORM DRAINAGE PIPING SHALL NOT BE MADE WITH FITTINGS WHICH WILL CAUSE EXCESSIVE REDUCTION IN THE VELOCITY OF FLOW OR CREATE ANY OTHER ADVERSE EFFECT. I.E.: USE OF SANITARY TEE IN A HORIZONTAL CONNECTION, USE OF A DOUBLE SANITARY TEE IN A VERTICAL STACK, USE OF SHORT RADIUS FITTINGS FOR BRANCH TO HOUSE DRAIN OR STACK CONNECTION.
9. CONTRACTOR SHALL GIVE 24 HOURS NOTICE TO APPLICABLE UTILITY COMPANY PRIOR TO PERFORMING WORK INVOLVING UTILITIES.
10. WHERE SANITARY SEWER LINES CROSS UNDERGROUND WATER SUPPLY LINES THE INSTALLATION SHALL COMPLY WITH THE FLORIDA BUILDING CODE SEVENTH EDITION 2020 - PLUMBING.
11. ALL FLOOR DRAINS SHALL BE PROVIDED WITH A TRAP PRIMER VALVE AND FITTINGS UNLESS NOTED OTHERWISE.
12. THE PLUMBING CONTRACTOR MAY BE REQUIRED TO DROP PIPE OUTSIDE OF BUILDING TO REQUIRED DEPTH TO PROVIDE CONNECTION TO AREA DEVELOPMENT UTILITY STUB. ALL DROPS IN DEPTH SHALL BE MADE WITH THE USE OF 45° FITTINGS.
13. ROUTE ALL PIPING CONCEALED ABOVE CEILINGS, WITHIN WALLS, OR IN CHASES. EXPOSED PIPING SHALL BE SLOPED AND PAINTED TO MATCH ARCHITECTURAL FINISHES. PIPING IN MECHANICAL ROOMS MAY BE EXPOSED.
14. SLEEVE AND FIRE STOP PENETRATIONS OF RATED WALLS, FLOORS, CEILINGS, ETC., IN ACCORDANCE WITH THE FLORIDA BUILDING CODE SEVENTH EDITION 2020 AND LOCAL CODES TO MAINTAIN RATINGS. REFER TO ARCHITECTURAL DRAWINGS FOR APPLICABLE UL STANDARDS AND LOCATIONS OF RATED WALLS, CEILINGS, FLOORS, ETC.
15. ALL WATER PIPING INSTALLED IN EXTERIOR WALLS SHALL BE PLACED ON THE INTERIOR SIDE OF THE WALL.THE WALL INSULATION SHALL BE PLACED ON THE EXTERIOR SIDE OF THE PIPE.
16. SEE RISER DIAGRAMS FOR BRANCH PIPING DETAILS AND SIZES NOT SHOWN ON PLANS.
17. COLD AND HOT WATER PIPING SHALL BE CHLORINATED POLYVINYL CHLORIDE (CPVC) SCHEDULE 40 PLASTIC PIPE AND TUBING (ASTM F441) WITH CPVC SCHEDULE 40 FITTINGS (ASTM F438) SOCKET TYPE. DISINFECT WATER PIPING AFTER PRESSURE TEST. DISINFECTION PROCEDURE SHALL COMPLY WITH THE LOCAL HEALTH AUTHORITY, LOCAL WATER PURVEYOR, FLORIDA BUILDING CODE SEVENTH EDITION 2020 - PLUMBING, SECTION 610 DISINFECTION OF POTABLE WATER SYSTEMS.
18. SOIL, WASTE, VENT PIPING AND FITTINGS SHALL BE PVC: ASTM D2665 SCHEDULE 40. JOINTS SHALL BE SOLVENT CEMENT. PROVIDE CAST IRON PIPE AND FITTINGS FOR SOIL, WASTE AND VENT PIPING LOCATED IN CEILING PLENUMS OR IN LOCATIONS OF HIGH TEMPERATURE WATER DISCHARGE IN THE KITCHEN AND LAUNDRY.
19. PROVIDE CLEANOUTS FOR SANITARY AND STORM PIPING AT BASE OF EACH VERTICAL STACK, AT EACH CHANGE OF DIRECTION OF HORIZONTAL PIPE RUNS AND AT 100 FOOT INTERVALS OF HORIZONTAL RUNS FOR SANITARY AND STORM PIPING.
20. PROVIDE ACCESS PANELS TO VALVES WITHIN CHASES, WALLS, OR ABOVE NON-ACCESSIBLE CEILINGS. REFER TO ARCHITECTURAL DRAWINGS FOR CEILING TYPES. SEE SPECIFICATION SECTION 220553 IDENTIFICATION FOR PLUMBING PIPING AND EQUIPMENT FOR ENGRAVED LABELS FOR ALL ACCESS PANELS, VALVES, PLUMBING EQUIPMENT, ETC. PROVIDE ENGRAVED LABEL ON CEILING GRID AT EQUIPMENT LOCATION.
21. SITE UTILITY CONNECTIONS SHOWN ON CIVIL DRAWINGS. ALL SERVICES SHOWN ON THIS SET OF PLANS TERMINATE 5'-0" FROM BUILDING, UNLESS SHOWN OTHERWISE ON DRAWINGS.
22. FURNISH AND INSTALL HOSE BIBBS AND/OR WALL HYDRANTS 24" ABOVE FINISHED GRADE/FLOOR (UNLESS OTHERWISE NOTED) AND PROVIDE VACUUM BREAKERS.
23. SEE ARCHITECTURAL DRAWINGS FOR EXACT LOCATIONS OF ROOF DRAINS, PLUMBING FIXTURE MOUNTING HEIGHTS AND DIMENSIONS.
24. CONTRACTOR SHALL VERIFY INVERT ELEVATIONS OF EXISTING SEWERS IN WHICH NEW SEWER LINES ARE TO BE CONNECTED PRIOR TO STARTING WORK.
25. CONTRACTOR SHALL INSTALL DIELECTRIC UNIONS AT CONNECTIONS OF DISSIMILAR METALS.
26. CONTRACTOR SHALL ROUGH-IN ALL WASTE AND SUPPLIES TO SPECIAL EQUIPMENT ACCORDING TO MANUFACTURER'S SHOP DRAWINGS AND MAKE FINAL CONNECTIONS AS NOTED. ALL SUPPLIES SHALL BE VALVED. INSTALL VACUUM BREAKERS WHERE REQUIRED BY CODE.
27. CONTRACTOR SHALL SUBMIT SHOP DRAWINGS (INCLUDING PIPE ROUTING AND EQUIPMENT LOCATIONS) TO ARCHITECT/ENGINEER FOR REVIEW PRIOR TO THE INSTALLATION OR PURCHASING OF ANY PIPING AND/OR EQUIPMENT.
28. PROVIDE REDUCED PRESSURE BACKFLOW PREVENTERS FOR DOMESTIC WATER SUPPLY CONNECTIONS AS REQUIRED BY CODE.
29. ALL BELOW GRADE/SLAB COPPER PIPE SHALL BE PLACED WITHIN COPPER PIPE SLEEVE (10 MIL) POLYETHYLENE PLASTIC SLEEVING. EXTEND SLEEVING ABOVE GRADE/SLAB.
30. CONTRACTOR SHALL REFER TO ARCHITECTURAL DRAWINGS FOR EXACT LOCATIONS OF FLOOR DRAINS LOCATED IN TOILET ROOMS. PLUMBING CONTRACTOR SHALL COORDINATE EXACT LOCATION OF FLOOR DRAINS SERVING MECHANICAL EQUIPMENT WITH MECHANICAL CONTRACTOR PRIOR TO INSTALLATION.
31. PRESSURE REDUCING VALVES SHALL BE INSTALLED ON BRANCH LINES SERVING FIXTURES AND/OR EQUIPMENT WHEN THE PRESSURE IN THE LINE EXCEEDS 80 P.S.I.
32. COORDINATE ROUTING OF ALL PLUMBING SYSTEMS TO AVOID CONFLICTS WITH OTHER DISCIPLINES WITHIN INTERSTITIAL SPACE AND ROUTE TIGHT TO STRUCTURE WHERE POSSIBLE. PIPING SHALL NOT ENTER OR PASS THROUGH ELECTRICAL AND COMMUNICATION ROOMS.
33. IF THE INTENT OF THE DRAWINGS AND/OR SPECIFICATIONS IS UNCLEAR OR HAS MORE THAN ONE INTERPRETATION, IT SHALL BE BROUGHT TO THE ATTENTION OF THE ARCHITECT/ENGINEER IN WRITING BEFORE THE SUBMISSION OF BIDS. THE ARCHITECT/ENGINEER SHALL MAKE CORRECTIONS AND/OR PROVIDE EXPLANATION IN WRITING.
34. PLANS AND SPECIFICATIONS ARE INTENDED AS A GENERAL DESCRIPTION OF THE WORK TO BE PERFORMED. ALL ITEMS NOT SPECIFICALLY MENTIONED OR SHOWN, BUT NECESSARY FOR THE COMPLETION OF THE INSTALLATION, SHALL BE FURNISHED AND INSTALLED BY THIS CONTRACTOR. THE CONTRACTOR SHALL ACQUAINT HIMSELF WITH THE MECHANICAL, ARCHITECTURAL, STRUCTURAL AND ELECTRICAL PLANS PRIOR TO SUBMITTING HIS FINAL BID. NO ADDITIONAL COMPENSATION WILL BE ALLOWED DUE TO CONTRACTORS FAILURE TO FAMILIARIZE HIMSELF WITH THE PLANS.
35. THE CONTRACTOR SHALL BASE HIS PROPOSAL UPON THE EQUIPMENT AS SCHEDULED OR SPECIFIED, USING THE MANUFACTURERS AND EQUIPMENT SPECIFIED ON THE DRAWINGS. IF MORE THAN ONE MANUFACTURER IS SPECIFIED FOR ONE ITEM, ANY ONE OF THE MANUFACTURERS LISTED MAY BE USED IN THIS CONTRACTOR'S PROPOSAL. IF THIS CONTRACTOR WISHES TO USE EQUIPMENT NOT SPECIFIED, HE MUST AT THE TIME OF BIDDING SUBMIT SEPARATELY ON LETTERHEAD STATIONARY OF THE BIDDER, THE EQUIPMENT HE WOULD SUBSTITUTE AND THE COST TO BE ADDED OR TO BE DEDUCTED FROM HIS PROPOSAL. CONTRACTOR'S PROPOSED SUBSTITUTES SHALL BE SUBMITTED TO ARCHITECT AND APPROVED BY OWNER.
36. THE CONTRACTOR IS EXPECTED TO ORDER ALL MATERIALS IN SUFFICIENT TIME TO AVOID DELAYING THE COMPLETION OF THE PROJECT. DELAY IN DELIVERY WILL NOT BE CONSIDERED A JUSTIFIABLE REASON FOR SUBMISSION OF SUBSTITUTE MATERIALS.
37. DO NOT PENETRATE WALL FOOTINGS WITH PIPING. COORDINATE PENETRATION LOCATION WITH GENERAL CONTRACTOR. PIPE PENETRATING A BEARING WALL OR FOOTING MUST BE SLEEVED AND LOCATION APPROVED BY STRUCTURAL ENGINEER.
38. REFER TO PLANS FOR VENT THRU ROOF (VTR) PIPE SIZES AND LOCATIONS. LOCATE VTR A MINIMUM OF 25' OF HORIZONTAL DISTANCE FROM ANY BUILDING OPENING OR FRESH AIR INTAKE. EXTEND VTR 12" ABOVE ROOF SURFACE. PROVIDE 1" FIBERGLASS INSULATION WITH ALL-SERVICE JACKET ON VENT PIPE INSIDE BUILDING WITHIN 6' OF VTR LOCATION. VERIFY FLASHING AND COUNTERFLASHING AND COORDINATE INSTALLATION WITH ROOFING CONTRACTOR.
39. COORDINATION: CONTRACTOR SHALL COORDINATE ITS CONSTRUCTION OPERATIONS WITH THOSE OF OTHER CONTRACTORS AND ENTITIES TO ENSURE EFFICIENT AND ORDERLY INSTALLATION OF EACH PART OF THE WORK. CONTRACTOR SHALL COORDINATE ITS OPERATIONS WITH OTHER CONTRACTORS OPERATIONS, THAT DEPEND ON EACH OTHER FOR PROPER INSTALLATION, CONNECTION AND OPERATION.
40. HEAT-TRACED PIPING SHALL MEET INSULATION THICKNESS REQUIREMENTS PER FLORIDA BUILDING CODE SEVENTH EDITION 2020 - ENERGY CONSERVATION.

SUBMITTALS AND SUBSTITUTIONS

1. CONTRACTOR SHALL SUBMIT THE FOLLOWING EQUIPMENT FOR REVIEW PRIOR TO ORDERING AND INSTALLING
   - A. PLUMBING FIXTURES
   - B. WATER HEATERS
   - C. RECIRCULATION PUMPS
   - D. PIPING
2. PROCESSING TIME: ALLOW 10 WORKING DAYS FOR REVIEW OF EACH SUBMITTAL. ALLOW ADDITIONAL TIME IF COORDINATION WITH SUBSEQUENT SUBMITTALS IS REQUIRED. ENGINEER WILL ADVISE CONTRACTOR WHEN A SUBMITTAL BEING PROCESSED MUST BE DELAYED FOR COORDINATION.
2. SUBMITTALS: PLACE A PERMANENT LABEL OR TITLE BLOCK ON EACH SUBMITTAL ITEM FOR IDENTIFICATION. INDICATE NAME OF FIRM OR ENTITY THAT PREPARED EACH SUBMITTAL ON LABEL OR TITLE BLOCK. PROVIDE A SPACE BESIDE TITLE BLOCK TO RECORD CONTRACTOR'S REVIEW AND APPROVAL MARKINGS AND ACTION TAKEN BY ENGINEER. INCLUDE THE FOLLOWING INFORMATION FOR PROCESSING AND RECORDING ACTION TAKEN:
   - A. PROJECT NAME.
   - B. DATE.
   - C. NAME OF ENGINEER.
   - D. NAME OF CONTRACTOR.
   - E. NAME OF SUBCONTRACTOR.
   - F. NAME OF SUPPLIER.
   - G. NAME OF MANUFACTURER.
   - H. DRAWING NUMBER AND DETAIL REFERENCES, AS APPROPRIATE.
   - I. LOCATION WHERE PRODUCT IS TO BE INSTALLED, AS APPROPRIATE.
4. SUBMIT ELECTRONIC SUBMITTALS VIA EMAIL AS PDF ELECTRONIC FILES.
5. PAPER SUBMITTALS: SUBMIT THREE PAPER COPIES OF EACH SUBMITTAL UNLESS OTHER WISE INDICATED. ENGINEER WILL RETURN TWO COPIES.
6. COLLECT SUBMITTAL DATE INFORMATION INTO A SINGLE SUBMITTAL FOR EACH ELEMENT OF CONSTRUCTION AND TYPE OF PRODUCT OR EQUIPMENT. MARK EACH COPY OF EACH SUBMITTAL TO SHOW WHICH PRODUCTS AND OPTIONS ARE APPLICABLE. INCLUDE THE FOLLOWING INFORMATION, AS APPLICABLE:
   - A. MANUFACTURER'S CATALOG CUTS.
   - B. MANUFACTURER'S PRODUCT SPECIFICATIONS.
   - C. STATEMENT OF COMPLIANCE WITH SPECIFIED REFERENCED STANDARDS.
   - D. NOTATION OF COORDINATION REQUIREMENTS.
   - E. WIRING DIAGRAMS SHOWING FACTORY-INSTALLED WIRING.
   - F. PRINTED PERFORMANCE CURVES.
   - G. OPERATIONAL RANGE DIAGRAMS.
   - H. CLEARANCES REQUIRED TO OTHER CONSTRUCTION, IF NOT INDICATED ON ACCOMPANYING SHOP DRAWINGS.
7. CONTRACTOR SHALL REVIEW EACH SUBMITTAL AND CHECK FOR COORDINATION WITH OTHER WORK OF THE CONTRACT AND FOR COMPLIANCE WITH THE CONTRACT DOCUMENTS. NOTE CORRECTIONS AND FIELD DIMENSIONS. MARK WITH APPROVAL STAMP BEFORE SUBMITTING TO ENGINEER. APPROVAL STAMP: STAMP SHALL STATE THAT SUBMITTAL HAS BEEN REVIEWED, CHECKED, AND APPROVED FOR COMPLIANCE WITH THE CONTRACT DOCUMENTS AND INITIALLED AND DATED BY CONTRACTOR.
8. ENGINEER WILL REVIEW EACH SUBMITTAL, MAKE MARKS TO INDICATE CORRECTIONS OR REVISIONS REQUIRED, AND RETURN IT. ENGINEER WILL STAMP EACH SUBMITTAL WITH AN ACTION STAMP AND WILL MARK STAMP APPROPRIATELY TO INDICATE ACTION.
9. ENGINEER WILL NOT REVIEW SUBMITTALS THAT DO NOT BEAR CONTRACTOR'S APPROVAL STAMP AND INITIALS AND WILL RETURN THEM WITHOUT ACTION. INCOMPLETE SUBMITTALS ARE UNACCEPTABLE, WILL BE CONSIDERED NONRESPONSIVE, AND WILL BE RETURNED FOR RESUBMITTAL WITHOUT REVIEW. SUBMITTALS NOT REQUIRED BY THE CONTRACT DOCUMENTS MAY NOT BE REVIEWED AND MAY BE DISCARDED
10. SUBSTITUTIONS
    - A. SUBSTITUTION OFFERS OWNER A SUBSTANTIAL ADVANTAGE IN COST, TIME, ENERGY CONSERVATION, OR OTHER CONSIDERATIONS.
    - B. SUBSTITUTION DOES NOT REQUIRE EXTENSIVE REVISIONS TO THE CONTRACT DOCUMENTS. CONTRACTOR SHALL COMPENSATE ENGINEER FOR ANY REDESIGN AND EVALUATION SERVICES INCLUDING CHANGES REQUIRED BY AUTHORITY HAVING JURISDICTION.
    - C. SUBSTITUTION WILL NOT ADVERSELY AFFECT CONSTRUCTION SCHEDULE.
    - D. SUBSTITUTION HAS RECEIVED NECESSARY APPROVALS OF AUTHORITIES HAVING JURISDICTION.
    - E. SUBSTITUTION HAS BEEN COORDINATED WITH OTHER PORTIONS OF THE WORK.
    - F. SUBSTITUTION PROVIDES SPECIFIED WARRANTY.
    - G. SUBSTITUTION HAS BEEN COORDINATED WITH OTHER PORTIONS OF THE WORK, AND IS ACCEPTABLE TO ALL CONTRACTORS INVOLVED.
    - H. CONTRACTOR SHALL ASSUME ANY ADDITIONAL CONSTRUCTION COSTS AS A RESULT OF THE SUBSTITUTION.

DRAWING INDEX

SHEET NUMBER	TITLE
P0.1	Plumbing General Information
P0.2	Plumbing Schedules
P1.1	Sanitary and Storm Floor Plan
P1.2	Domestic Water and Gas Floor Plan
P2.1	Plumbing Roof Plan
P5.1	Plumbing Details
P6.1	Sanitary and Storm Riser Diagrams
P7.1	Domestic Water and Gas Riser Diagrams

FLORIDA BUILDING CODE SEVENTH EDITION (2020) ENERGY CONSERVATION COMPLIANCE

THE DESIGN COMPLIES WITH SECTION C401.2 APPLICATION ITEM 3:

THE REQUIREMENTS OF SECTION C402.5, C403.2, C404, C405.2, C405.4, C405.5, C407 AND C408. THE BUILDING ENERGY COST SHALL BE EQUAL TO OR LESS THAN 85 PERCENT OF THE STANDARD REFERENCE DESIGN BUILDING.

WATER HAMMER ARRESTOR SCHEDULE

D = INSTALLED ARRESTOR SHALL BE APPROVED DEVICE BY FLORIDA BUILDING CODE SEVENTH EDITION 2020 - PLUMBING. ALL SUPPLY PIPING SHALL HAVE ARRESTOR THE SAME SIZE AS CONNECTION SIZE UP TO 1" I.E. PROVIDE P.D.I. SIZE "C" FOR 1" OR LARGER WATER SUPPLY TO FIXTURES, P.D.I. SIZE "B" FOR 3/4" SUPPLY AND P.D.I. SIZE "A" FOR 1/2" SUPPLY.

* P.D.I. SIZE	CONNECTION SIZE
A (1-11 F.U.)	1/2"
B (12-32 F.U.)	3/4"
C (33-60 F.U.)	1"

P.D.I. = PLUMBING AND DRAINAGE INSTITUTE STANDARD WH-201

SUBMITTED FOR 100% CONSTRUCTION DOCUMENTS

HALL & OGLE ARCHITECTS, INC.
208 MAGNOLIA AVENUE
DAYTONA BEACH, FLORIDA 32114
www.hoarchitects.com
PH (386) 255-6163
FAX (386)257-5650
AA-C000925

DELOSE O'NEAL ENGINEERING
PO. BOX 530247
DeBary, FL 32753
P (407) 766-2813
C (321) 277-4128
CONSULTANTS

MINDY N. O'NEAL
FL# 69779

REVISIONS

NO.	DATE	DESCRIPTION
		DOCUMENT HISTORY

Replacement Fire Station # 96
City of Holly Hill, Fl.
1020 Daytona Avenue
Holly Hill , Florida

ARCH/ENGR OF RECORD
MINDY N. O'NEAL
FL# 69779

DESIGNED BY	DRAWN BY
MNO	KMO
ISSUE DATE	AE PROJECT NUMBER
18-MAY-2023	2204

SHEET TITLE
PLUMBING GENERAL INFORMATION

DRAWING NO.
P0.1

Attachment: Exhibit C - Fire Station #96 Bid Set (2023-R-55 : Fire Station Construction)

FIXTURE SPECIFICATIONS

TAG	FIXTURE	MANUFACTURER	MODEL #	PIPE SIZE				DESCRIPTION
				CW	HW	SAN	VENT	
WC-1	WATER CLOSET FLUSH TANK	AMERICAN STANDARD	211AA104	1/2"	-	4"	2"	ADA COMPLIANT, VITREOUS CHINA, 2-PIECE CONSTRUCTION TANK-TYPE, 1.28 GPF, ELONGATED BOWL WATER CLOSET WITH PISTON-ACTION FLUSH VALVE. 16-1/2" RIM HEIGHT. PROVIDE WITH MANUFACTURERS RECOMMENDED ANGLE SUPPLY STOPS, SUPPLY TUBING AND INSTALLATION MATERIALS. PROVIDE ANTIMICROBIAL OPEN FRONT COVERLESS SEAT. FIXTURE COLOR TO BE WHITE.
WC-2	WATER CLOSET FLUSH TANK	AMERICAN STANDARD	211CA104	1/2"	-	4"	2"	VITREOUS CHINA, 2-PIECE CONSTRUCTION TANK-TYPE, 1.28 GPF, ELONGATED BOWL WATER CLOSET WITH PISTON-ACTION FLUSH VALVE. PROVIDE WITH MANUFACTURERS RECOMMENDED ANGLE SUPPLY STOPS, SUPPLY TUBING AND INSTALLATION MATERIALS. PROVIDE ANTIMICROBIAL OPEN FRONT COVERLESS SEAT. FIXTURE COLOR TO BE WHITE.
L-1	LAVATORY WALL HUNG	AMERICAN STANDARD	0355.012	1/2"	1/2"	2"	1-1/2"	ADA COMPLIANT WALL HUNG VITREOUS LAVATORY. PROVIDE ANGLE SUPPLIES, P-TRAP, PIPING INSULATION WRAP, DRAIN GRID AND INSTALLATION MATERIALS. INSTALL AS REQUIRED TO MEET ADA GUIDELINES. PROVIDE AMERICAN STANDARD FAUCET 6055.105 BATTERY INCLUDED WITH THERMOSTATIC MIXING VALVE 605XTMV1070. INSTALL USING MANUFACTURERS RECOMMENDATIONS.
L-2	LAVATORY COUNTERTOP	AMERICAN STANDARD	0355.012	1/2"	1/2"	2"	1-1/2"	WALL HUNG VITREOUS LAVATORY. PROVIDE ANGLE SUPPLIES, P-TRAP, PIPING INSULATION WRAP, DRAIN GRID AND INSTALLATION MATERIALS. INSTALL AS REQUIRED TO MEET ADA GUIDELINES. PROVIDE AMERICAN STANDARD FAUCET 6055.105 BATTERY INCLUDED WITH THERMOSTATIC MIXING VALVE 605XTMV1070. INSTALL USING MANUFACTURERS RECOMMENDATIONS.
LT-1	LAUNDRY TUB	MUSTEE	19CF	1/2"	1/2"	2"	1-1/2"	COMBO LAUNDRY / UTILITY TUB, HIGH STRENGTH, ONE PIECE MOLDED CONSTRUCTION, 18 GALLON CAPACITY, 34"X20"X24", 13" BOWL DEPTH, WITH 6" SWING SPOUT FAUCET WITH AERATOR AND HOSE END, TWO 20" FLEXIBLE SUPPLY LINES, AND SEALANT TAPE, 1-1/2" PVC P-TRAP WITH 12" TAILPIECE, DRAIN STOPPER, COLOR WHITE.
S-1	SINK COUNTERTOP (DOUBLE BOWL)	ELKAY	DLR332210	1/2"	1/2"	2"	1-1/2"	SELF-RIMMING, DOUBLE COMPARTMENT SINK, TYPE 302, 18-8 S/S, 33"X22"X10-1/8" DEEP, PUNCHED FOR 4-HOLE FAUCET. PROVIDE DECK MOUNTED, SINGLE LEVER, AERATOR, DELTA MODEL 300LF-WF FAUCET. PROVIDE 3/8" ANGLE SUPPLY W/ VERTICAL TUBE, P-TRAP W/ CLEANOUT AND LOOSE KEY STOPS. INSTALL PER MANUFACTURERS INSTRUCTIONS.
S-2	SINK COUNTERTOP	ELKAY	ILGR4322L	1/2"	1/2"	2"	1-1/2"	SELF RIMMING, SINGLE COMPARTMENT SINK WITH DRAINBOARD,18 GAUGE, TYPE 304 S/S, 43"X22"X10" DEEP, PUNCHED FOR 4-HOLE FAUCET. PROVIDE DECK MOUNTED, SINGLE LEVER, AERATOR, DELTA MODEL 300LF-WF FAUCET. PROVIDE 3/8" ANGLE SUPPLY W/ VERTICAL TUBE, P-TRAP W/ CLEANOUT AND LOOSE KEY STOPS. INSTALL PER MANUFACTURERS INSTRUCTIONS.
SH-1	SHOWER VALVE	SYMMONS	C-96-1-X	1/2"	1/2"	3"	1-1/2"	SINGLE HANDLE PRESSURE BALANCING MIXING VALVE WITH SHOWER HEAD. INSTALL USING MANUFACTURERS RECOMMENDED INSTALLATION INSTRUCTIONS.
SH-2	SHOWER VALVE	SYMMONS	C-96-500-B30-V-X	1/2"	1/2"	3"	1-1/2"	SHOWER / HAND SHOWER SYSTEM , SINGLE HANDLE PRESSURE BALANCING MIXING VALVE WITH SHOWER HEAD AND HAND SHOWER WITH 30" SLIDE BAR AND 60" FLEXIBLE METAL HOSE. INSTALL USING MANUFACTURERS RECOMMENDED INSTALLATION INSTRUCTIONS.
WH-1	WALL HYDRANT (EXTERIOR)	WOODFORD	B67	3/4"	-	-	-	AUTOMATIC DRAINING, FREEZELESS WALL HYDRANT WITH HOSE CONNECTION BACKFLOW PROTECTION. ASSE 1052 APPROVED, TWO INDEPENDENT CHECK VALVES, BRASS VALVE BODY, LOOSE KEY. WALL BOX DOOR SHALL BE CHROME FINISH.
ET-1	EXPANSION TANK	AMTROL	ST-5C	3/4"	-	-	-	THERMAL EXPANSION TANK, APPROVED FOR POTABLE WATER. INSTALL PER MANUFACTURERS RECOMMENDATIONS.
FD-1	FLOOR DRAIN	ZURN	ZN415-B	-	-	2"	1-1/2"	CAST IRON BODY WITH BOTTOM OUTLET, INVERTIBLE MEMBRANE CLAMP AND ADJUSTABLE COLLAR WITH 6" DIAMETER TYPE "B" NICKEL BRONZE ROUND STRAINER. PROVIDE WITH DEEP SEAL TRAP.
FD-2	FLOOR DRAIN	ZURN	ZN415-B	-	-	3"	2"	CAST IRON BODY WITH BOTTOM OUTLET, INVERTIBLE MEMBRANE CLAMP AND ADJUSTABLE COLLAR WITH 6" DIAMETER TYPE "B" NICKEL BRONZE ROUND STRAINER. PROVIDE WITH DEEP SEAL TRAP AND 1/2" TRAP PRIMER CONNECTION OUTLET.
FD-3	FLOOR DRAIN	ZURN	Z541	-	-	4"	2"	12" DIAMETER TOP DRAIN, CAST IRON BODY WITH BOTTOM OUTLET, SEEPAGE PAN AND COMBINATION MEMBRANE FLASHING CLAMP AND FRAME. POLISHED NICKEL BRONZE TOP WITH SUSPENDED POLYPROPYLENE SEDIMENT BUCKET. PROVIDE WITH DEEP SEAL TRAP.
EWC-1	HI-LO ELECTRIC WATER COOLER	ELKAY	LZSTL8WSLK	1/2"	-	2"	1-1/2"	BI-LEVEL BARRIER FREE ADA COMPLIANT ELECTRIC WATER COOLER WITH BOTTLE FILLING STATION. COORDINATE POWER OUTLET LOCATION WITH ELECTRICAL CONTRACTOR FOR ELECTRICAL CORD WITH 3-PRONG PLUG.INSTALL PER MANUFACTURERS RECOMMENDATIONS. REFER TO ARCHITECTURAL ELEVATIONS FOR MOUNTING HEIGHTS.
EWC-2	ELECTRIC WATER COOLER	ELKAY	LZS8WSLK	1/2"	-	2"	1-1/2"	WALL MOUNTED ELECTRIC WATER COOLER WITH BOTTLE FILLING STATION. COORDINATE POWER OUTLET LOCATION WITH ELECTRICAL CONTRACTOR FOR ELECTRICAL CORD WITH 3-PRONG PLUG. INSTALL PER MANUFACTURERS RECOMMENDATIONS. REFER TO ARCHITECTURAL PLANS FOR MOUNTING HEIGHTS.
MS-1	MOP SINK	FIAT	MSB-2424	3/4"	3/4"	3"	1-1/2"	FLOOR MOUNTED MOLDED PLASTIC BASIN WITH HOSE BRACKET 832-AA, WALL MOUNTED FAUCET 830-AA AND CORNER GUARD ON THE FRONT LIP.
IMB-1	ICE MAKER CONNECTION BOX	OATEY	39156	1/2"	-	-	-	ICE MAKER OUTLET BOX, RECESSED UNIT W/ ONE 1/2" VALVE (TOP SUPPLY) COLD WATER. PROVIDE WITH OMNIPURE MODEL K2333 IN-LINE WATER FILTER.
WMB-1	WASHING MACHINE BOX	OATEY	38569	1/2"	1/2"	2"	1-1/2"	PROVIDE WASHING MACHINE OUTLET BOX WITH HOT & COLD SUPPLY, WASTE HOSE, RECESSED WITH WALL FLANGE, QUARTER TURN BALL VALVES WITH WATER HAMMER ARRESTORS. PROVIDE WITH 2" DRAIN CONNECTION.
FCO	FLOOR CLEANOUT	ZURN	Z1400	-	-	-	-	FLOOR CLEANOUT WITH ACCESS COVER. SEE PLANS FOR PIPE SIZE CONNECTION.
ECO	EXTERIOR CLEANOUT	ZURN	Z-1400-HD	-	-	-	-	HEAVY TRAFFIC AREA EXTERIOR CLEANOUT WITH ACCESS COVER AND TWO-WAY FITTING. SEE PLANS FOR PIPE SIZE CONNECTION.
WHA	WATER HAMMER ARRESTOR	ZURN / WILKINS	1250	-	-	-	-	WATER HAMMER ARRESTOR SHALL MEET ASSE 1010. THE DEVICE SHALL CONSIST OF A COPPER BODY WITH AN ACETAL PISTON, BUNA NITRILE O-RINGS AND LEAD FREE SOLDER. THE DEVICE SHALL BE PRE-CHARGED AND SEALED AT THE FACTORY.
TPV-1	TRAP PRIMER VALVE	PRECISION PLUMBING	PRO1-ULP500	1/2"	-	-	-	UNDER-LAV TRAP PRIMER, MINIMUM 12" ABOVE FINISHED FLOOR. INSTALL PER MANUFACTURERS INSTRUCTIONS.
BFP-1	BACKFLOW PREVENTER	WATTS	LF7C	-	-	-	-	DUAL CHECK VALVE BACKFLOW PREVENTER, ASSE 1024 APPROVED, WITH CAST BODY. CAN BE INSTALLED VERTICALLY OR HORIZONTALLY.
AAV	AIR ADMITTANCE VALVE	OATEY	39016	-	-	-	-	20 DFU, SURE-VENT AIR ADMITTANCE VALVE WITH 1-½" X 2" PVC SCHEDULE 40 ADAPTER. INSTALL PER MANUFACTURERS REQUIREMENTS.
BV-1	CIRCUIT SETTING BALANCING BALL VALVE	BELL & GOSSETT	CB	-	-	-	-	CALIBRATED BALANCE VALVE, BRONZE BODY AND BRASS BALL CONSTRUCTION WITH GLASS AND CARBON FILLED TFE SEAT RINGS, BRASS READ OUT VALVES WITH EPT CHECK VALVES AND EPDM STEM O-RINGS. VALVE SHALL BE RATED FOR 200 PSI AND A WORKING TEMPERATURE OF 250°F.
RD-1	PRIMARY ROOF DRAIN	ZURN	ZC-100	-	-	-	-	MAIN ROOF DRAIN, 15" DIAMETER, DURA-COATED CAST IRON BODY WITH COMBINATION MEMBRANE FLASHING CLAMP/GRAVEL GUARD WITH CAST IRON DOME. SEE PLANS FOR PIPE SIZE CONNECTIONS.

NOTE:
1. VERIFY WITH OWNER ALL SPECIFIED EQUIPMENT SELECTIONS PRIOR TO PURCHASE AND INSTALLATION.
2. REFER TO ARCHITECTURAL DRAWINGS FOR ALL FINAL LOCATIONS AND MOUNTING DIMENSIONS OF ALL PLUMBING FIXTURES. PROVIDE ADA CONFORMING FACTORY INSULATION KIT ON HOT, COLD AND P-TRAP WASTE PIPING AT ADA DESIGNATED LAVATORIES.

PIPING MATERIAL SCHEDULE

SERVICE	SIZE	MATERIAL	SCHEDULE/TYPE	INSULATION		REMARKS
				TYPE	THICKNESS	
COLD WATER	ALL	CPVC	SCH. 40	FG	1"	SEE NOTE 2
HOT WATER	ALL	CPVC	SCH. 40	FG	1"	SEE NOTE 2
SANITARY	ALL	C.I. OR PVC	NOTE 3	NONE	-	NO HUB
VENT	ALL	PVC	SCH. 40	NONE	-	SEE NOTE 1
ST BELOW GRADE	ALL	C.I. OR PVC	SERVICE WEIGHT	NONE	-	NO HUB
ST ABOVE GRADE	ALL	C.I. OR PVC	SERVICE WEIGHT	FG	1"	NO HUB
NATURAL GAS	ALL	METALLIC	SCH. 40	NONE	-	-

NOTES:
1. WASTE AND VENT PIPING IN PLENUM SPACE SHALL BE SERVICE WEIGHT CAST IRON, NO HUB.
2. FIBERGLASS PIPE INSULATION: MINERAL OR GLASS FIBERS BONDED WITH A THERMOSETTING RESIN. SEMIRIGID BOARD MATERIAL WITH FACTORY-APPLIED ASJ COMPLYING WITH ASTM C 1393, OR WITH PROPERTIES SIMILAR TO ASTM C 612. NOMINAL DENSITY IS 2.5 LB/CU. FT. OR MORE. THERMAL CONDUCTIVITY (K VALUE) AT 100 DEG. F (55 DEG. C) IS 0.29 BTU X IN./H X SQ.FT. X DEG. F (0.042 W/M X K) OR LESS. ALL SERVICE JACKET (ASJ): WHITE, KRAFT-PAPER, FIBERGLASS-REINFORCED SCRIM WITH ALUMINUM-FOIL BACKING; COMPLYING WITH ASTM C 1136, TYPE MANUFACTURER: A. CERTAINTEED CORP., B. JOHNS MANVILLE, C. KNAUF INSULATION, D. OWENS CORNING
3. FOR PVC ONLY SCHEDULE 40 DWV. FOAM CORE PVC NOT ALLOWED.

GAS WATER HEATER SCHEDULE

MARK	FUEL TYPE	GAS CONSUMPTION INPUT		RECOVERY (GPH @70° RISE)	MANUFACTURER	UNIFORM ENERGY FACTOR (UEF)	MODEL	LOCATION
		MINIMUM (BTU/H)	MAXIMUM (BTU/H)					
GWH-1	NATURAL GAS	15,000	199,000	300	A.O. SMITH	0.95	ATO-540H-N	EXTERIOR WALL
GWH-2	NATURAL GAS	15,000	199,000	300	A.O. SMITH	0.95	ATO-540H-N	EXTERIOR WALL

NOTES:
1. HIGH EFFICIENCY, OUTDOOR CONDENSING TANKLESS GAS WATER HEATER.
2. SET OUTLET TEMPERATURE AT 140 °F.
3. VERIFY WITH OWNER SPECIFIED EQUIPMENT SELECTION OF APPROVED EQUAL PRIOR TO PURCHASE AND INSTALLATION.
4. PROVIDE WITH 120V/1Ø ELECTRICAL SERVICE FOR EQUIPMENT CONTROLS.

HOT WATER RECIRCULATION PUMP SCHEDULE

MARK	FLOW (GPM)	HEAD (FT)	HP	VOLTS	HZ	PH	AMPS	RPM	MANUFACTURER	MODEL	LOCATION	NOTES
RCP-1	4	8	1/8	115	60	1	1.76	3250	TACO	0010-IFC	LAUNDRY 128	1,2,3

NOTES:
1. PROVIDE BRONZE FLANGE CONNECTIONS AND BRONZE CASING.
2. PROVIDE AQUASTAT & TIMER FOR PUMP OPERATION. AQUASTAT AND TIMER EACH REQUIRES A SEPERATE 115V-60-1 ELECTRICAL CONNECTION.
3. PROVIDE PUMP WITH CIRCUIT SETTING BALANCING BALL VALVE. BELL & GOSSET CB CALIBRATED BALANCE VALVE, BRONZE BODY AND BRASS BALL CONSTRUCTION WITH GLASS AND CARBON FILLED TFE SEAT RINGS, BRASS READ OUT VALVES WITH EPT CHECK VALVES AND EPDM STEM O-RINGS. VALVE SHALL BE RATED FOR 200 PSI AND A WORKING TEMPERATURE OF 250°F.

GAS UTILITY DISTRIBUTION SYSTEM

ITEM NO.	QTY.	DESCRIPTION	TOTAL BTU LOAD	PIPE CONNECTION SIZE
GWH-1	1	GAS WATER HEATER	199,000	3/4"
GWH-2	1	GAS WATER HEATER	199,000	3/4"
GR-1	1	OUTDOOR GRILL	96,000	3/4"
GS-1	1	INDOOR GAS STOVE	75,000	3/4"
GEN-1	1	GENERATOR	273,000	1"

TOTAL BTU = 842,000

GAS PIPING NOTES:

1. REFER TO EQUIPMENT PRODUCT DATA FOR EXACT LOCATIONS OF FIXTURES, REQUIRED BTUH, PIPE ROUGH-IN HEIGHTS AND ADDITIONAL INFORMATION.
2. THE PLUMBING CONTRACTOR SHALL PROVIDE GAS PIPING TO GAS EQUIPMENT. THE MANUFACTURER/ EQUIPMENT SUPPLIER SHALL FURNISH GAS REGULATORS AND RESTRAINING DEVICES FOR EACH GAS CONSUMING APPLIANCE. THE GAS REGULATING VALVES SHALL BE INSTALLED BY THIS CONTRACTOR AND SHALL INSTALL ALL GAS CONSUMING EQUIPMENT PER MANUFACTURERS INSTALLATION REQUIREMENTS.
3. THE PLUMBING CONTRACTOR SHALL PROVIDE GAS PIPING TO PLUMBING EQUIPMENT. THE WATER HEATER EQUIPMENT SUPPLIER SHALL FURNISH GAS REGULATORS AND RESTRAINING DEVICES FOR EACH GAS CONSUMING APPLIANCE. THE GAS REGULATING VALVES SHALL BE INSTALLED BY THIS CONTRACTOR AND SHALL INSTALL ALL GAS CONSUMING EQUIPMENT PER MANUFACTURERS INSTALLATION REQUIREMENTS.
4. THE PLUMBING CONTRACTOR SHALL PROVIDE SHUT-OFF VALVES AND FLEXIBLE CONNECTORS WITH QUICK DISCONNECTS FOR EACH GAS CONSUMING APPLIANCE. (COORDINATE WITH THE EQUIPMENT SUPPLIER.)
5. GAS PIPING SHALL BE PROVIDED IN ACCORDANCE WITH FLORIDA BUILDING CODE 2020 - FUEL GAS.
6. GAS SERVICES SHALL BE CONNECTED TO EQUIPMENT WITH STAINLESS STEEL FLEXIBLE HOSES. BRANCH TAPS SHALL BE MADE OFF OF THE TOP OF THE PIPING. GAS FITTINGS AND HOSES SHALL BE A.G.A. APPROVED FOR RESIDENTIAL EQUIPMENT. GAS AND WATER HOSES SHALL BE COVERED WITH A THICK FIRE RESISTANT PLASTIC OR POLY COATING.
7. FUEL GAS SERVICES SHALL BE SIZED TO SUPPLY THE REQUIRED BTUH INDICATED TO THE EQUIPMENT AT PRESSURES AS SHOWN ON THE DRAWINGS. PROVIDE PRESSURE REGULATORS AS REQUIRED.
8. THE INSTALLING SUBCONTRACTOR SHALL BE LICENSED FOR THE INSTALLATION OF NATURAL GAS.
9. GAS PIPING SHALL BE SCHEDULE 40, ASME B36.10. PIPING JOINTS SHALL BE THREADED (4 INCH PIPE OR LESS) OR WELDED. FITTINGS SHALL BE STEEL OR MALLEABLE IRON.
10. CONNECTION AT EACH GAS APPLIANCE SHALL INCLUDE A INVERTED TRAP, GAS COCK, UNION, AND DIRT LEG.
11. GAS PIPING SHALL BE INSPECTED, TESTED AND PURGED PER THE FLORIDA BUILDING CODE 2020 - FUEL GAS.
12. ALL GAS EQUIPMENT SHALL BE AGA APPROVED.
13. GAS PIPING OUTSIDE OF BUILDING & EXPOSED PIPING IN APPARATUS BAY SHALL BE PAINTED WITH YELLOW "RUSTOLEUM" PAINT. THEN IF AGAINST THE BUILDING PAINT TO MATCH SURFACE.
14. GAS PIPING SHALL BE HUNG TIGHT TO THE ROOF STRUCTURE, AS SHOWN ON THE PLAN AND SUPPORTED WITH HANGERS BY GRINNELL OR EQUAL.
15. BRANCH TAPS SHALL BE MADE OFF THE TOP OF THE PIPING.

SUBMITTED FOR 100% CONSTRUCTION DOCUMENTS

HALL & OGLE ARCHITECTS, INC.
208 MAGNOLIA AVENUE
DAYTONA BEACH, FLORIDA 32114
www.hoarchitects.com
PH (386) 255-6163
FAX (386)257-5650
AA-C000925

DELOSE O'NEAL ENGINEERING
PO. BOX 530247
DeBary, FL 32753
P (407) 766-2813
C (321) 277-4128
CONSULTANTS

REVISIONS

NO.	DATE	DESCRIPTION

DOCUMENT HISTORY

Replacement Fire Station # 96
City of Holly Hill, Fl.
1020 Daytona Avenue
Holly Hill , Florida

MINDY N. O'NEAL
FL# 69779

ARCH/ENGR OF RECORD
MINDY N. O'NEAL
FL# 69779

DESIGNED BY	DRAWN BY
MNO	KMO
ISSUE DATE	AE PROJECT NUMBER
18-MAY-2023	2204

SHEET TITLE
PLUMBING SCHEDULES

DRAWING NO.
P0.2

Attachment: Exhibit C - Fire Station #96 Bid Set (2023-R-55 : Fire Station Construction)

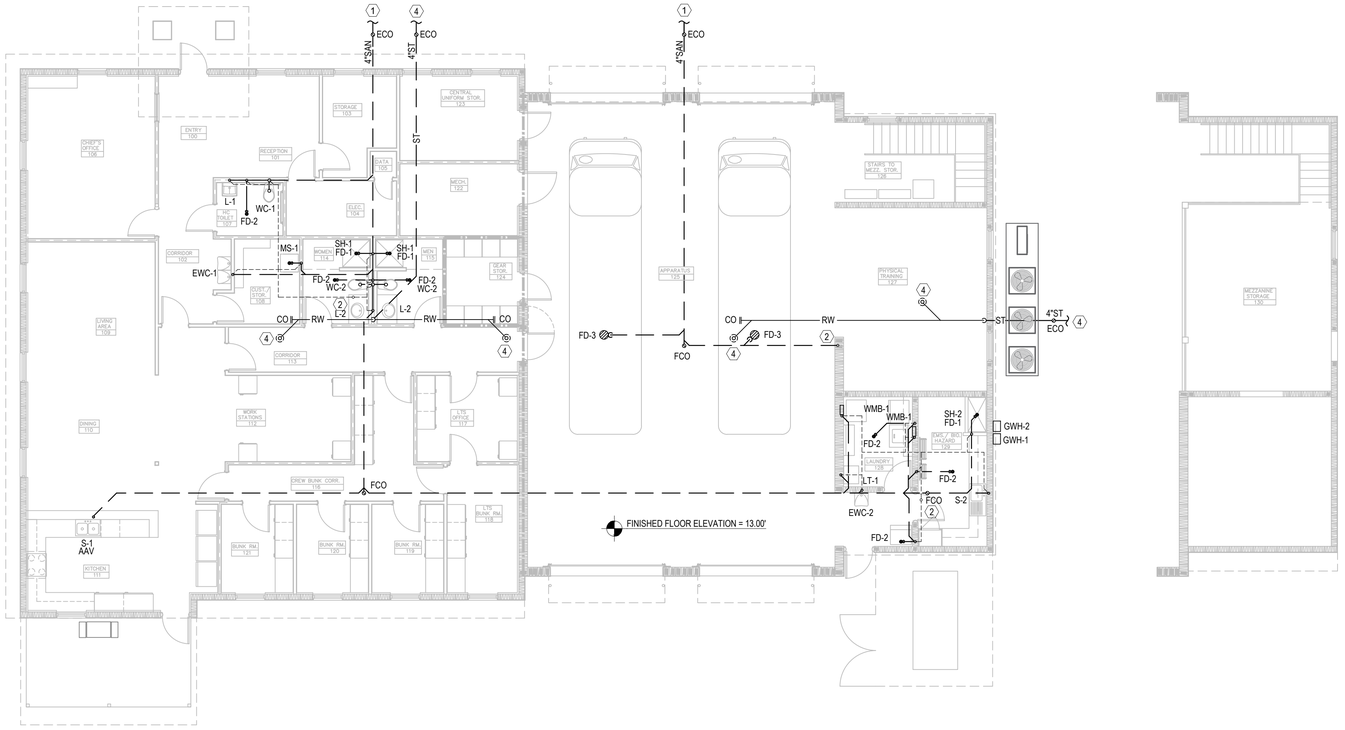

GENERAL PLAN NOTES:

1. COMPLETE AND WORKING PLUMBING SYSTEMS SHALL BE IN ACCORDANCE WITH THE 2020 FLORIDA BUILDING CODE - PLUMBING, 7TH EDITION AND AUTHORITY HAVING JURISDICTION.
2. REFER TO RISER DIAGRAMS FOR BRANCH PIPING DETAILS AND SIZES NOT SHOWN ON PLANS.
3. BELOW SLAB PIPING SHALL BE COORDINATED TO AVOID STRUCTURAL FOOTINGS. REFER TO STRUCTURAL DRAWINGS.

PLUMBING PLAN KEY NOTES:

1. 4"SANITARY BELOW GRADE. INVERT ELEVATION = 10.00'. REFER TO CIVIL PLANS FOR CONTINUATION.
2. 3"V UP TO 3"VTR.
3. 4"STORM BELOW GRADE. INVERT ELEVATION = 10.00'. REFER TO CIVIL PLANS FOR CONTINUATION.
4. 4"RW UP TO 4"RD-1. REFER TO P2.1 PLUMBING ROOF PLAN FOR CONTINUATION.

SANITARY AND STORM FLOOR PLAN

SCALE: 1/8"=1'-0"

SUBMITTED FOR 100% CONSTRUCTION DOCUMENTS

GRAPHIC SCALE
4' 0 5' 10' 15' 20'
1/8"=1'-0"

HALL & OGLE ARCHITECTS, INC.
208 MAGNOLIA AVENUE
DAYTONA BEACH, FLORIDA 32114
www.hoarchitects.com
PH (386) 255-6163
FAX (386)257-5650
AA-C000925

DELOSE O'NEAL ENGINEERING
PO. BOX 530247
DeBary, FL 32753
P (407) 796-2813
C (321) 277-4128
CONSULTANTS

MINDY N. O'NEAL
FL# 69779

REVISIONS

NO.	DATE	DESCRIPTION

DOCUMENT HISTORY

Replacement Fire Station # 96
City of Holly Hill, Fl.
1020 Daytona Avenue
Holly Hill , Florida

ARCHENGR OF RECORD
MINDY N. O'NEAL
FL# 69779

DESIGNED BY	DRAWN BY
MNO	KMO
ISSUE DATE	AE PROJECT NUMBER
18-MAY-2023	2204

SHEET TITLE
SANITARY AND STORM FLOOR PLAN

DRAWING NO.
P1.1

Attachment: Exhibit C - Fire Station #96 Bid Set (2023-R-55 : Fire Station Construction)

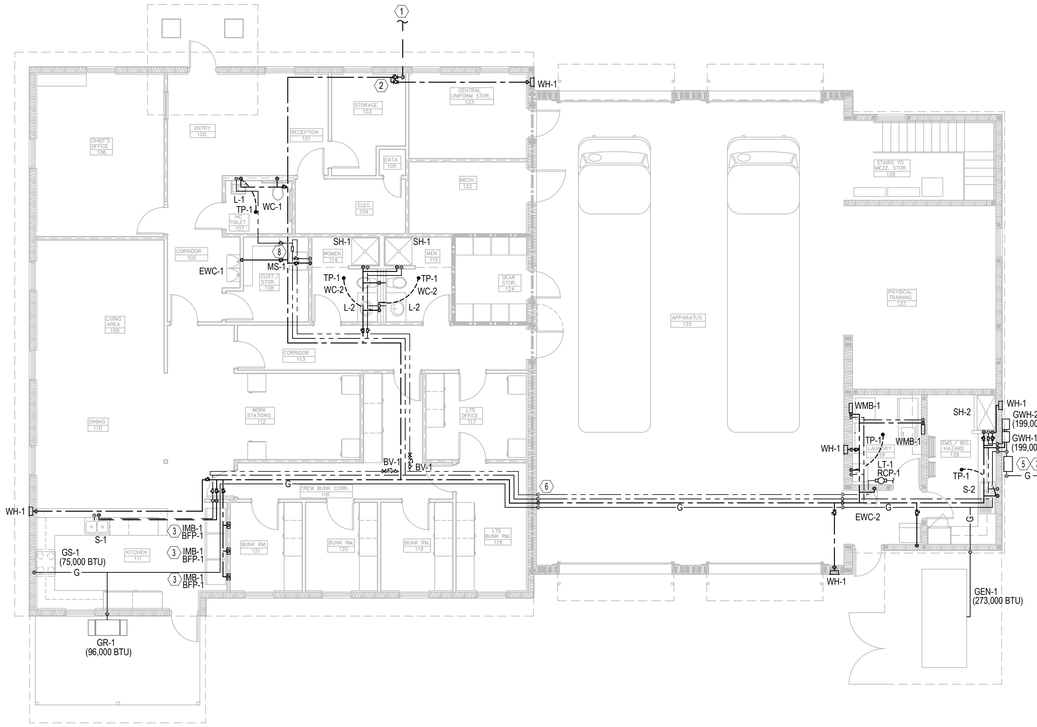

DOMESTIC WATER AND GAS FLOOR PLAN (1 / P1.2)
SCALE: 1/8"=1'-0"

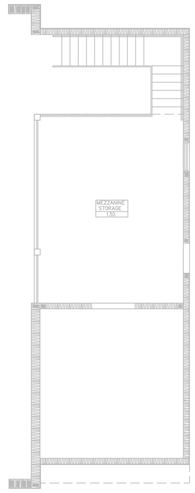

GENERAL PLAN NOTES:

1. COMPLETE AND WORKING PLUMBING SYSTEMS SHALL BE IN ACCORDANCE WITH THE 2020 FLORIDA BUILDING CODE - PLUMBING, 7TH EDITION AND AUTHORITY HAVING JURISDICTION.
2. REFER TO RISER DIAGRAMS FOR BRANCH PIPING DETAILS AND SIZES NOT SHOWN ON PLANS.
3. BELOW SLAB PIPING SHALL BE COORDINATED TO AVOID STRUCTURAL FOOTINGS. REFER TO STRUCTURAL DRAWINGS.

PLUMBING PLAN KEY NOTES:

1. 1-1/2"CW BELOW GRADE. BACKFLOW PREVENTER AND WATER METER EXTERIOR TO BUILDING BY OTHERS. REFER TO CIVIL PLANS FOR CONTINUATION.
2. 1-1/2"CW MAIN SHUTOFF VALVE FOR BUILDING.
3. 1/2"CW TO ICE MAKER BOX.
4. FOR WATER DISTRIBUTION AND CONNECTIONS TO WATER HEATER, RECIRCULATION PUMP, AND THERMAL EXPANSION TANK REFER TO WATER HEATER DETAIL ON P5.1.
5. UNDERGROUND GAS LINE, GAS METER AND REGULATOR SHALL BE PROVIDED AND INSTALLED BY GAS UTILITY COMPANY. REFER TO CIVIL DRAWINGS FOR CONTINUATION.
6. MAINTAIN FIRE RATING FOR ALL PIPE PENETRATIONS THROUGH FIRE RATED ASSEMBLIES (TYPICAL).
7. 1"GAS TO SERVE BUILDING.
8. AQUASTAT CONTROLLER.

SUBMITTED FOR 100% CONSTRUCTION DOCUMENTS

GRAPHIC SCALE
4' 0 5' 10' 15' 20'
1/8"=1'-0"

HALL & OGLE ARCHITECTS, INC.
208 MAGNOLIA AVENUE
DAYTONA BEACH, FLORIDA 32114
www.hoarchitects.com
PH (386) 255-6163
FAX (386)257-5650
AA-C000925

DELOSE O'NEAL ENGINEERING
PO. BOX 530247
DeBary, FL 32753
P (407) 796-2813
C (321) 277-4128
CONSULTANTS

REVISIONS

NO.	DATE	DESCRIPTION	DOCUMENT HISTORY

MINDY N. O'NEAL
FL# 69779

Replacement Fire Station # 96
City of Holly Hill, Fl.
1020 Daytona Avenue
Holly Hill , Florida

ARCH/ENGR OF RECORD
MINDY N. O'NEAL
FL# 69779

DESIGNED BY	DRAWN BY
MNO	KMO
ISSUE DATE	AE PROJECT NUMBER
18-MAY-2023	2204

SHEET TITLE
DOMESTIC WATER AND GAS FLOOR PLAN

DRAWING NO.
P1.2

Attachment: Exhibit C - Fire Station #96 Bid Set (2023-R-55 : Fire Station Construction)

ROOF DRAIN CALCULATIONS

SIZE OF CONDUCTORS AND LEADERS PER FLORIDA BUILDING CODE-PLUMBING, 7TH EDITION 2020 TABLE 1106.2 - STORM DRAIN PIPE SIZING
HORIZONTALLY PROJECTED ROOF AREA SQUARE FOOTAGE
RAINFALL RATE (INCHES PER HOUR) = 5.0"
GPM PER 1 SQ FT = 0.052

ZONE 1 - 750 SQ FT X 0.052 = 39 GPM		
FLAT ROOF AREA	=	750 SQ FT
TOTAL	=	750 SQ FT
ZONE 2 - 800 SQ FT X 0.052 = 42 GPM		
FLAT ROOF AREA	=	750 SQ FT
SIDEWALL AREA = 20 LF X 7' H = 140 SF/2	=	75 SQ FT
TOTAL	=	800 SQ FT
ZONE 3 - 900 SQ FT X 0.052 = 47 GPM		
FLAT ROOF AREA	=	730 SQ FT
SIDEWALL AREA = 50 LF X 7' H = 350 SF/2	=	175 SQ FT
TOTAL	=	905 SQ FT
ZONE 4 - 350 SQ FT X 0.052 = 18 GPM		
FLAT ROOF AREA	=	350 SQ FT
TOTAL	=	350 SQ FT

*REFER TO ARCHITECTURAL PLANS FOR SCUPPER LOCATIONS.

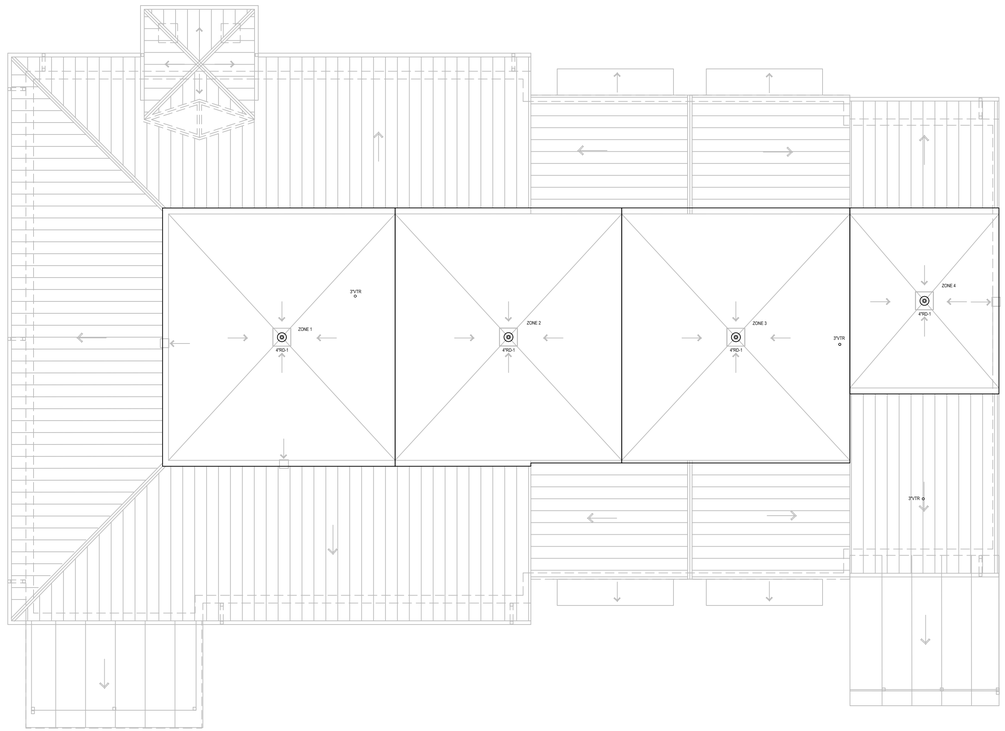

PLUMBING ROOF PLAN
SCALE: 1/8"=1'-0"
1 / P2.1
N

SUBMITTED FOR 100% CONSTRUCTION DOCUMENTS

GRAPHIC SCALE
4' 0 5' 10' 15' 20'
1/8"=1'-0"

HALL & OGLE ARCHITECTS, INC.
208 MAGNOLIA AVENUE
DAYTONA BEACH, FLORIDA 32114
www.hoarchitects.com
PH (386) 255-6163
FAX (386)257-5650
AA-C000925

DELOSE O'NEAL ENGINEERING
P.O. BOX 530267
DeBary, FL 32753
P (407) 766-2813
C (321) 277-4128
CONSULTANTS

MINDY N. O'NEAL
FL# 69779

REVISIONS

NO.	DATE	DESCRIPTION

DOCUMENT HISTORY

Replacement Fire Station # 96
City of Holly Hill, Fl.

1020 Daytona Avenue
Holly Hill , Florida

ARCH/ENGR OF RECORD
MINDY N. O'NEAL
FL# 69779

DESIGNED BY	DRAWN BY
MNO	KMO
ISSUE DATE	AE PROJECT NUMBER
18-MAY-2023	2204

SHEET TITLE
PLUMBING ROOF PLAN

DRAWING NO.
P2.1

Attachment: Exhibit C - Fire Station #96 Bid Set (2023-R-55 : Fire Station Construction)

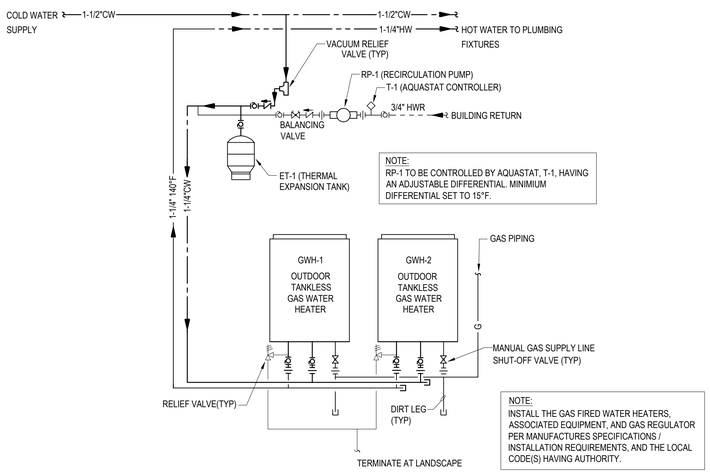

1 Gas Water Heaters Detail
SCALE: NOT TO SCALE

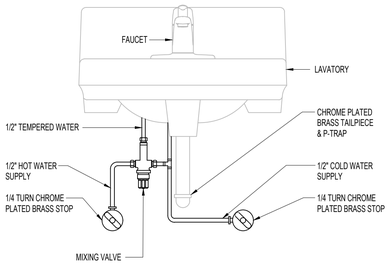

2 Tempering Valve Under Lav Detail
SCALE: NOT TO SCALE

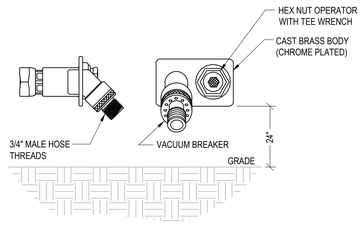

3 Wall Hydrant Detail
SCALE: NOT TO SCALE

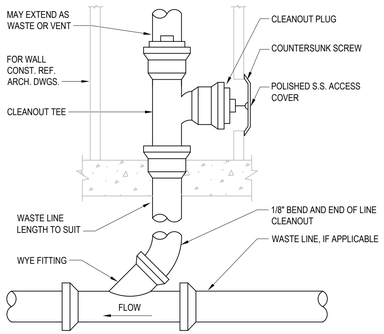

6 Wall Cleanout Detail
SCALE: NOT TO SCALE

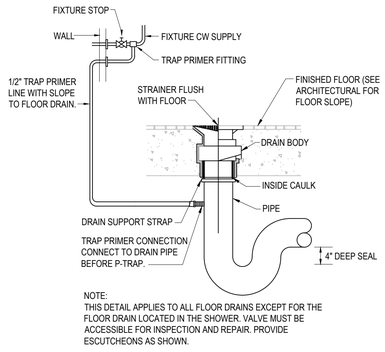

NOTE:
THIS DETAIL APPLIES TO ALL FLOOR DRAINS EXCEPT FOR THE FLOOR DRAIN LOCATED IN THE SHOWER. VALVE MUST BE ACCESSIBLE FOR INSPECTION AND REPAIR. PROVIDE ESCUTCHEONS AS SHOWN.

7 Under Sink Trap Primer Detail
SCALE: NOT TO SCALE

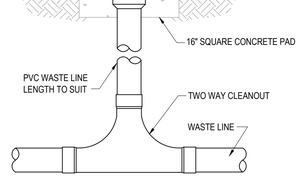

4 External Cleanout Detail
SCALE: NOT TO SCALE

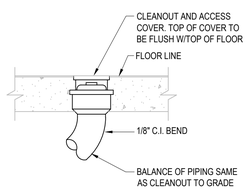

5 Floor Cleanout Detail
SCALE: NOT TO SCALE

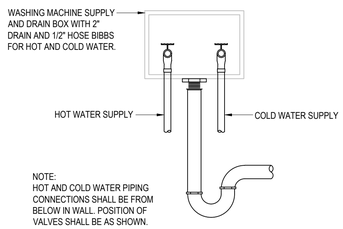

NOTE:
HOT AND COLD WATER PIPING CONNECTIONS SHALL BE FROM BELOW IN WALL. POSITION OF VALVES SHALL BE AS SHOWN.

8 Washing Machine Box Detail
SCALE: NOT TO SCALE

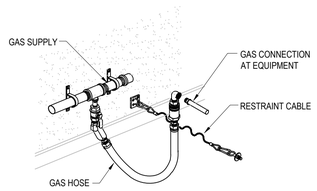

NOTE
FOR GAS SUPPLY ROUGH-INS AT EQUIPMENT: STUB FROM WALL OR BRANCH OFF MAIN GAS LINE ACCORDING TO LOCAL CODES; CONNECT TO UNITS WITH QUICK DISCONNECT HOSES; VERIFY HEIGHT OF MAIN GAS LINE

9 Gas Connection Detail
SCALE: NOT TO SCALE

SUBMITTED FOR 100% CONSTRUCTION DOCUMENTS

HALL & OGLE ARCHITECTS, INC.
208 MAGNOLIA AVENUE
DAYTONA BEACH, FLORIDA 32114
www.hoarchitects.com
PH (386) 255-6163
FAX (386)257-5650
AA-C000925

DELOSE O'NEAL ENGINEERING
PO. BOX 530247
DeBary, FL 32753
P (407) 766-2813
C (321) 277-4128
CONSULTANTS

MINDY N. O'NEAL
FL# 69779

REVISIONS
DOCUMENT HISTORY

NO.	DATE	DESCRIPTION

Replacement Fire Station # 96
City of Holly Hill, Fl.
1020 Daytona Avenue
Holly Hill , Florida

ARCHENGR OF RECORD
MINDY N. O'NEAL
FL# 69779

DESIGNED BY	DRAWN BY
MNO	KMO
ISSUE DATE	AE PROJECT NUMBER
18-MAY-2023	2204

SHEET TITLE
PLUMBING DETAILS

DRAWING NO.
P5.1

Attachment: Exhibit C - Fire Station #96 Bid Set (2023-R-55 : Fire Station Construction)

GENERAL NOTES:

1. CLEANOUTS SHALL BE INSTALLED WHERE REQUIRED IN ACCORDANCE WITH SECTION 708 OF THE FLORIDA BUILDING CODE SEVENTH EDITION 2020 - PLUMBING
2. STORM DRAINAGE SHALL BE INSTALLED IN ACCORDANCE WITH SECTION 1101 OF THE FLORIDA BUILDING CODE SEVENTH EDITION 2020 - PLUMBING AND PIPES SHALL NOT BE REDUCED IN THE DIRECTION OF FLOW.
3. STORM DRAIN PIPE SIZING IS IN ACCORDANCE WITH TABLE 1106.2 OF THE FLORIDA BUILDING CODE SEVENTH EDITION 2020 - PLUMBING. MINIMUM ROOF DRAIN SIZE IS TO BE NO LESS THAN 4 INCH.

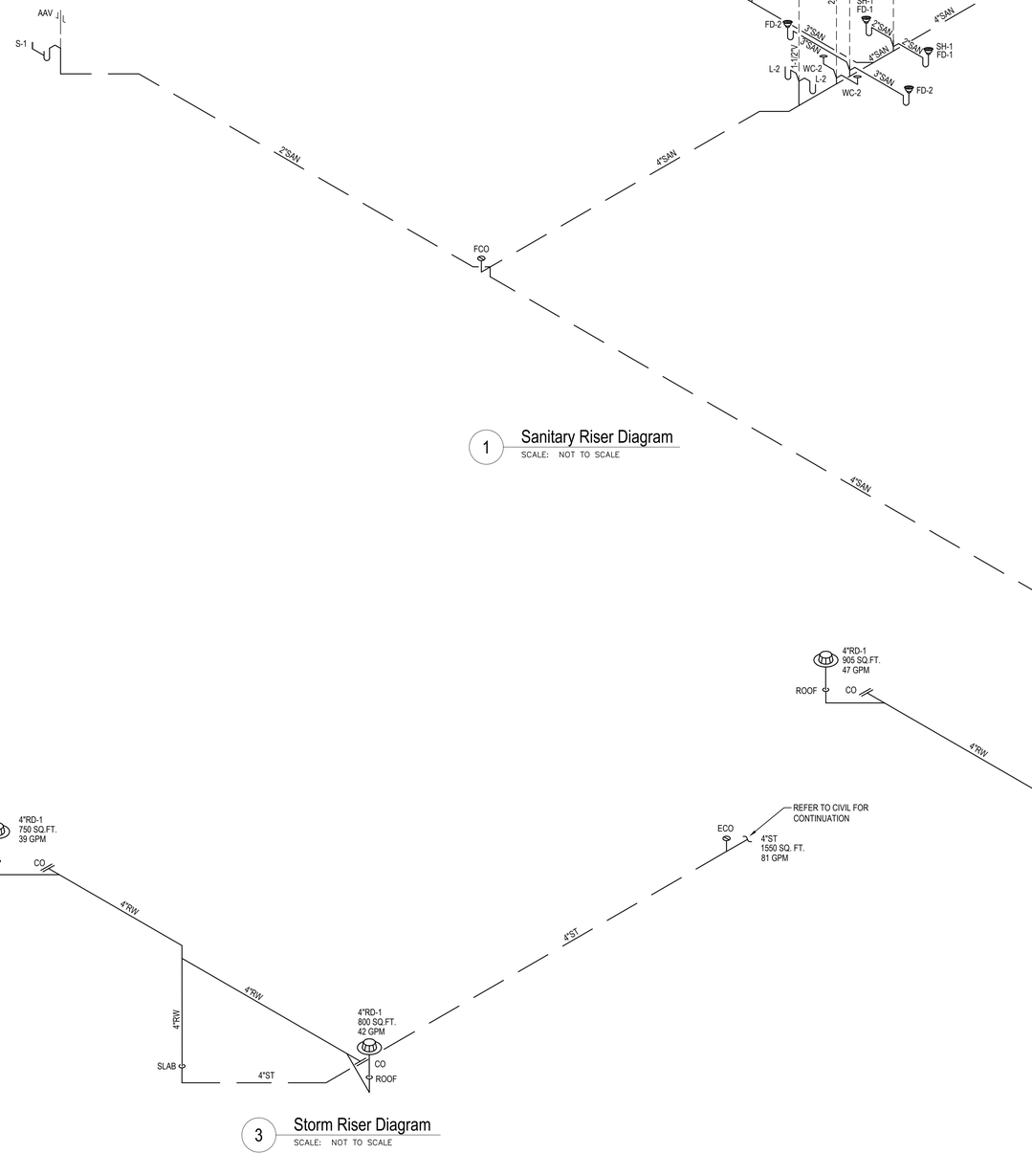

1 Sanitary Riser Diagram
SCALE: NOT TO SCALE

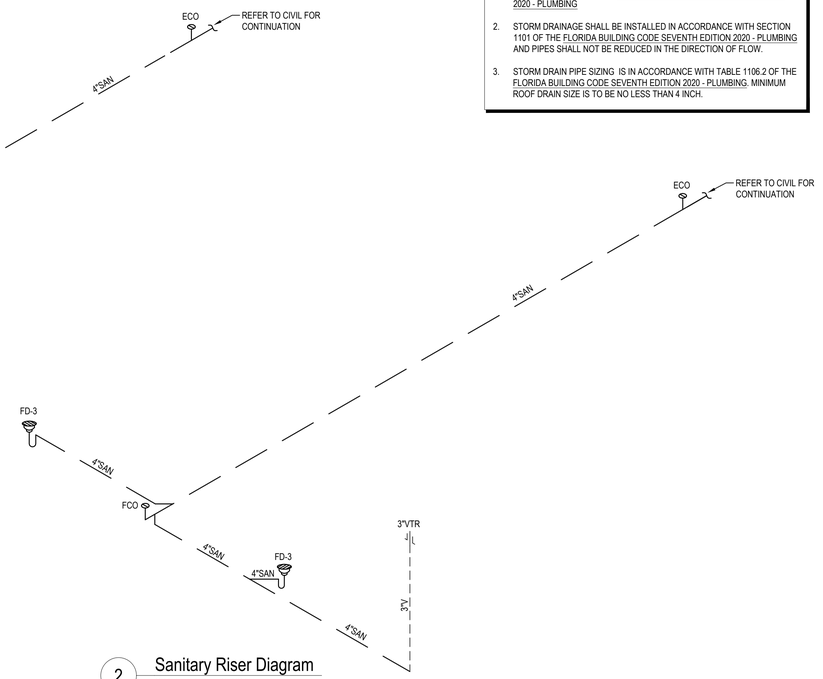

2 Sanitary Riser Diagram
SCALE: NOT TO SCALE

3 Storm Riser Diagram
SCALE: NOT TO SCALE

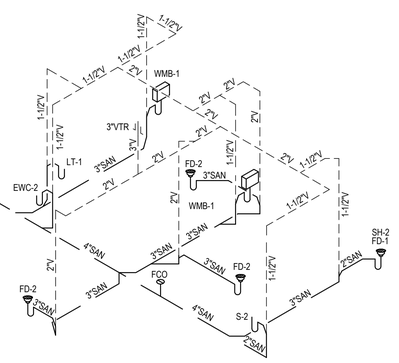

4 Storm Riser Diagram
SCALE: NOT TO SCALE

SUBMITTED FOR 100% CONSTRUCTION DOCUMENTS

HALL & OGLE ARCHITECTS, INC.
208 MAGNOLIA AVENUE
DAYTONA BEACH, FLORIDA 32114
www.hoarchitects.com
PH (386) 255-6163
FAX (386)257-5650
AA-C000925

DELOSE O'NEAL ENGINEERING
PO. BOX 530247
DeBary, FL 32753
P (407) 766-2813
C (321) 277-4128
CONSULTANTS

MINDY N. O'NEAL
FL# 69779

REVISIONS

NO.	DATE	DESCRIPTION

Replacement Fire Station # 96
City of Holly Hill, Fl.
1020 Daytona Avenue
Holly Hill , Florida

ARCH/ENGR OF RECORD
MINDY N. O'NEAL
FL# 69779

DESIGNED BY	DRAWN BY
MNO	KMO
ISSUE DATE	AE PROJECT NUMBER
18-MAY-2023	2204

SHEET TITLE
SANITARY AND STORM RISER DIAGRAMS

DRAWING NO.
P6.1

Attachment: Exhibit C - Fire Station #96 Bid Set (2023-R-55 : Fire Station Construction)

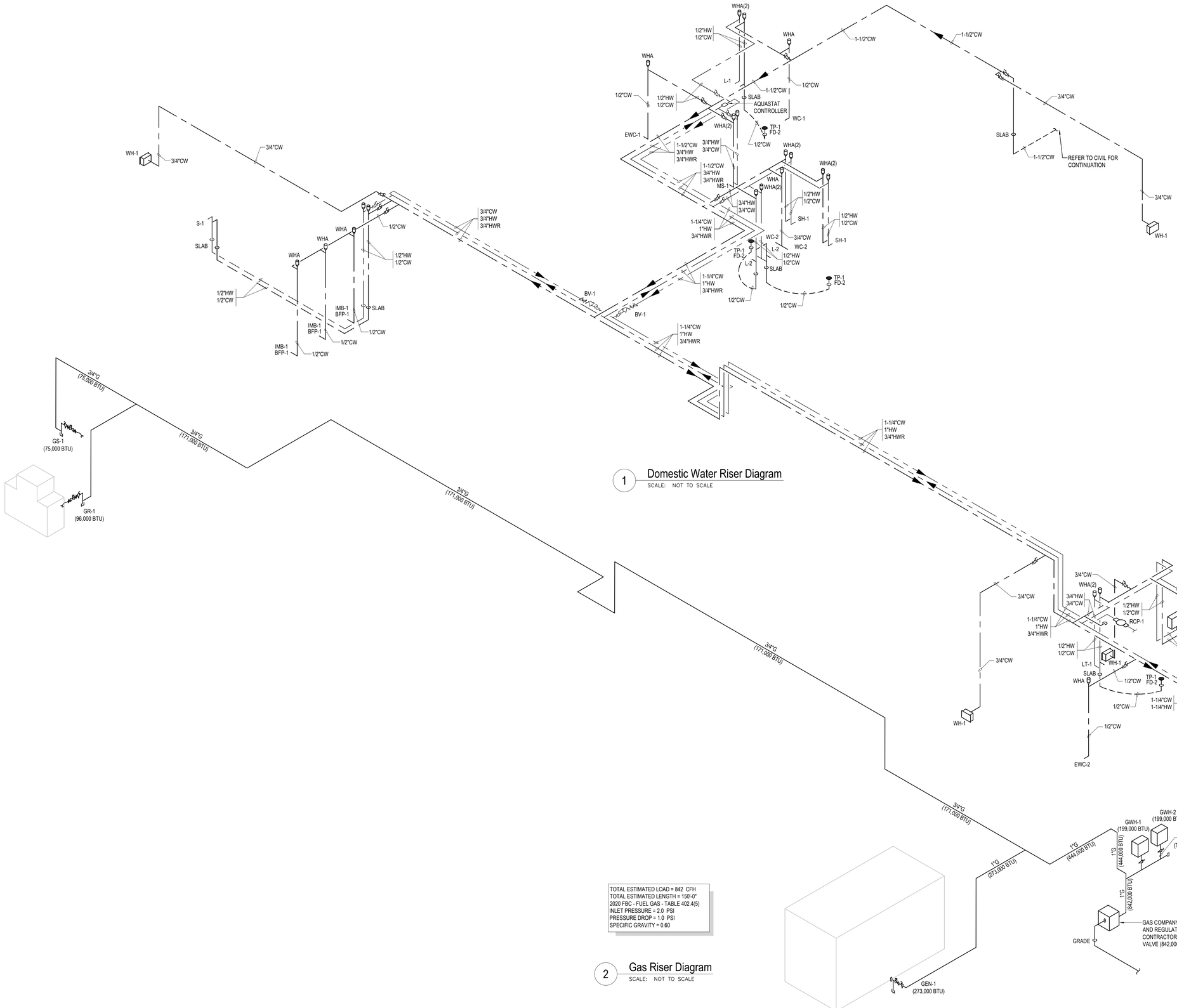

1 Domestic Water Riser Diagram
SCALE: NOT TO SCALE

TOTAL ESTIMATED LOAD = 842 CFH
TOTAL ESTIMATED LENGTH = 150'-0"
2020 FBC - FUEL GAS - TABLE 402.4(5)
INLET PRESSURE = 2.0 PSI
PRESSURE DROP = 1.0 PSI
SPECIFIC GRAVITY = 0.60

2 Gas Riser Diagram
SCALE: NOT TO SCALE

SUBMITTED FOR 100% CONSTRUCTION DOCUMENTS

HALL & OGLE ARCHITECTS, INC.
208 MAGNOLIA AVENUE
DAYTONA BEACH, FLORIDA 32114
www.hoarchitects.com
PH (386) 255-6163
FAX (386)257-5650
AA-C000925

DELOSE O'NEAL ENGINEERING
CONSULTANTS
PO. BOX 530247
DeBary, FL 32753
P (407) 766-2813
C (321) 277-4128

MINDY N. O'NEAL
FL# 69779

REVISIONS

NO.	DATE	DESCRIPTION

Replacement Fire Station # 96
City of Holly Hill, Fl.
1020 Daytona Avenue
Holly Hill , Florida

ARCHENGR OF RECORD
MINDY N. O'NEAL
FL# 69779

DESIGNED BY	DRAWN BY
MNO	KMO
ISSUE DATE	AE PROJECT NUMBER
18-MAY-2023	2204

SHEET TITLE
DOMESTIC WATER AND GAS RISER DIAGRAMS

DRAWING NO.
P7.1

Attachment: Exhibit C - Fire Station #96 Bid Set (2023-R-55 : Fire Station Construction)

EXISTING FIRE SPRINKLER RISER DETAIL

1. 4" FROM CITY SUPPLY, SEE CIVIL FOR CONTINUATION
2. 4" MECHANICAL JOINT ELBOW
3. 4" GROOVED BUTTERFLY VALVE W/TAMPER SWITCH
4. 4" RISER CHECK VALVE
5. 2" MAIN DRAIN
6. WATER FLOW SWITCH
7. GROOVED 90° ELBOW
8. SPARE HEAD CABINET WITH WRENCH
9. ELECTRIC BELL MOUNTED ON OUTSIDE WALL

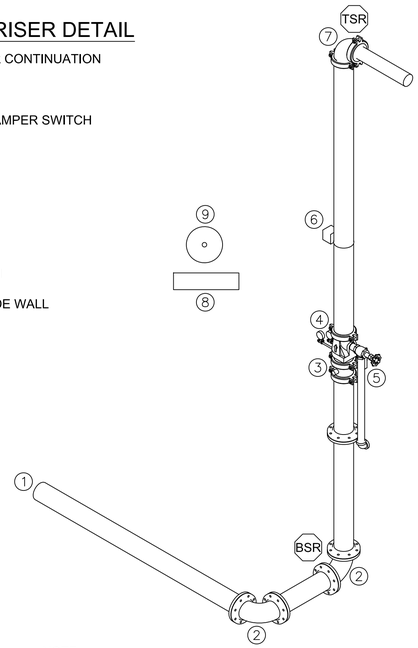

NOTE:
INSTALL A HYDRAULIC CALCULATION PLATE INDICATING THE BASE OF RISER SPRINKLER DEMAND FOR EACH DESIGN CALCULATION AREA.
TOTAL SPRINKLERS THIS RISER MANIFOLD = 73.
THE FIRE DEPARTMENT CONNECTION IS ON THE DOWNSTREAM SIDE OF THE BACKFLOW PREVENTER.

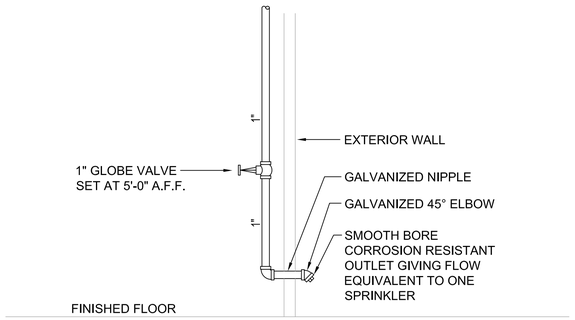

INSPECTOR'S TEST DETAIL

FAC 61G15-32.003 NOTES

32.003(1) THE FIRE SPRINKLER CONTRACTOR SHALL PREPARE DETAILED WORKING PLANS IN ACCORDANCE WITH NFPA 13, 2016 EDITION, CHAPTER 23. THE FIRE PROTECTION SYSTEM LAYOUT SHALL FOLLOW THE DESIGN GUIDELINES SET FORTH IN THESE FIRE PROTECTION ENGINEERING DOCUMENTS.

32.003(2) THE FIRE SPRINKLER CONTRACTOR SHALL OBTAIN THE ACCEPTANCE TESTS FROM THE LOCAL AUTHORITY. THE ACCEPTANCE TEST FOR THE OVERHEAD SPRINKLER SYSTEM PIPING SHALL BE IN ACCORDANCE WITH NFPA 13, 2016 EDITION CHAPTER 25, SECTION 25.1 USING THE MATERIAL AND TEST CERTIFICATE FOR ABOVEGROUND PIPING IN FIGURE 25.1. THE ACCEPTANCE TEST FOR THE UNDERGROUND PIPING SHALL BE IN ACCORDANCE WITH NFPA 13, 2016 EDITION CHAPTER 10, SECTION 10.10 USING THE MATERIAL AND TEST CERTIFICATE FOR UNDERGROUND PIPING IN FIGURE 10.10.1.

32.003(5) SPRINKLER PIPING SHALL BE SUBSTANTIALLY SUPPORTED FROM THE BUILDING STRUCTURE, WHICH MUST SUPPORT THE ADDED LOAD OF THE WATER FILLED PIPE PLUS A MINIMUM OF 250 LB APPLIED AT THE POINT OF HANGING. SEE STRUCTURAL DRAWINGS FOR SUPERIMPOSED DEAD LOAD OF SPRINKLER PIPE.

FAC 61G15-32.004 NOTES

A. THE POINT OF SERVICE IS INDICATED AT THE EXISTING DOUBLE DETECTOR CHECK VALVE. AT THIS POINT, THE SYSTEM IS DEDICATED SOLELY FOR FIRE PROTECTION PURPOSES. SEE CIVIL UTILITIES DRAWINGS FOR LOCATIONS. NO DOMESTIC WATER SHALL BE TAKEN FROM THE SYSTEM BEYOND THIS POINT FOR OTHER PURPOSES.

B. THE FOLLOWING ARE APPLICABLE STANDARDS:
FLORIDA FIRE PREVENTION CODE, 7TH EDITION (2020).
NFPA 13, 2016 EDITION, STANDARD FOR THE INSTALLATION OF SPRINKLER SYSTEMS
NFPA 25, 2017 EDITION, STANDARD FOR THE INSPECTION, TESTING AND MAINTENANCE OF WATER-BASED FIRE PROTECTION SYSTEMS.

C. OFFICES: THE OFFICE AREAS SHALL EMPLOY QUICK RESPONSE, STANDARD SPRAY CHROME RECESSED PENDENT TYPE SPRINKLERS WITH A 155°F TEMPERATURE RATING AND A K-FACTOR OF 5.6 OR GREATER. THE SYSTEM SHALL HAVE A DESIGNED DENSITY OF 0.10 GPM/FT² FOR A REMOTE AREA OF 1,500 FT². MAXIMUM SPRINKLER HEAD PROTECTION AREA IS LIMITED TO 225 FT²/HEAD.
APPARATUS BAY: THE APPARATUS BAY SHALL EMPLOY QUICK RESPONSE, STANDARD SPRAY BRASS UPRIGHT TYPE SPRINKLERS WITH A 155°F TEMPERATURE RATING AND A K-FACTOR OF 5.6 OR GREATER. THE SYSTEM SHALL HAVE A DESIGNED DENSITY OF 0.15 GPM/FT² FOR A REMOTE AREA OF 1,500 FT². MAXIMUM SPRINKLER HEAD PROTECTION AREA IS LIMITED TO 130 FT²/HEAD.

D. THE SPRINKLER SYSTEM SHALL BE WET PIPE FOR THE OFFICE SPACE USING 0.10gpm OVER THE MOST REMOTE 1,500 sq.ft., 225 sq.ft. MAXIMUM HEAD SPACING & 100gpm HOSE STREAM.
THE SPRINKLER SYSTEM SHALL BE WET PIPE FOR THE APPARATUS BAY USING 0.15gpm OVER THE MOST REMOTE 1,500 sq.ft., 130 sq.ft. MAXIMUM HEAD SPACING & 250gpm HOSE STREAM.

E. WATER SUPPLY: THIS BUILDING WILL HAVE A NEW 4" FIRE LINE WHICH TIES INTO AND EXISTING WATER MAIN ON 10TH STREET.

F. FIRE FLOW TEST: TEST RESULTS ARE AS FOLLOWS: 57psi STATIC, 35psi RESIDUAL, FLOWING 1,150gpm, 0.90 BUTT COEFFICIENT. LOCATION: FLOW TEST READINGS WERE TAKEN FROM (1) HYDRANT ADJACENT TO THIS SITE ON 10TH STREET. DATE: 04-03-23.

G. VALVE AND ALARM REQUIREMENTS: ALL CONTROL VALVES ON SPRINKLER RISERS AND FIRE PROTECTION BACKFLOW PREVENTERS SHALL HAVE A TAMPER SWITCH. THE FLOW SWITCH SHALL BE SET TO NOT ALARM WITH MINOR CITY WATER PRESSURE FLUCTUATIONS. HOWEVER, THE FLOW OF ONE SPRINKLER HEAD SHALL PRODUCE AN ALARM CONDITION BY TRIPPING THE FLOW SWITCH. ALL FLOW AND TAMPER SWITCHES SHALL BE CONNECTED TO THE BUILDING FIRE ALARM PANEL. FLOW SWITCHES SHALL ALSO SOUND THE ELECTRIC ALARM BELL ON THE OUTSIDE WALL. FIRE SPRINKLER CONTRACTOR SHALL VERIFY AND TEST PER NFPA 13.

H. THE LOCAL WATER PURVEYOR IS REQUESTED TO ADVISE THE ENGINEER OF RECORD IF CONDITIONS EXIST IN THEIR WATER SUPPLY THAT COULD LEAD TO MIC, SO THAT THE ENGINEER CAN DESIGN CORRECTIVE MEASURES. THERE ARE NO KNOWN MIC CONDITIONS IN THE LOCAL WATER SYSTEMS.

I. BACKFLOW PREVENTER AND METERING SPECIFICATIONS SHALL MEET OR EXCEED REQUIREMENTS OF LOCAL REQUIREMENTS.

J. YARD AND INTERIOR FIRE PROTECTION COMPONENTS: PRODUCT DATA SHEETS SHALL BE SUBMITTED BY THE SPRINKLER CONTRACTOR ALONG WITH THEIR SHOP DRAWINGS. ALL FIRE PROTECTION DEVICES AND COMPONENTS SHALL BE UL LISTED AND FM APPROVED.

K. THIS RETAIL SPACE DOES NOT REQUIRE A FIRE PUMP.

L. THIS SITE DOES NOT REQUIRE A WATER STORAGE TANK.

M. OWNER'S CERTIFICATE. IN STORAGE OCCUPANCIES, THE OWNER'S INFORMATION CERTIFICATE IS REQUIRED FROM THE PROPERTY OWNER AS IT CLEARLY DEFINES THE STORAGE CONFIGURATION OF THE SPACE FOR THE CURRENT AND FUTURE USE OF THE PROPERTY, AS REQUIRED BY THE CODES AND STANDARDS SET FORTH IN SUBSECTION 61G15-32.002(7), F.A.C.

FIRE PROTECTION GENERAL NOTES

1. FIRE PROTECTION DESIGN IS FOR THE REPLACEMENT FIRE STATION #96 HOLLY HILL, FL.

2. THIS NEW SINGLE STORY CONCRETE BLOCK BUILDING, WITH STEEL STRUCTURE, WILL SUPPORT A MIXED USE RESIDENTIAL R-2 (LODGING & ROOMING OCCUPANCY) AND GROUP S2 (STORAGE OF FIRE EQUIPMENT & VEHICLES). THE STRUCTURE WILL BE PROTECTED BY AN NEW WET-PIPE SPRINKLER SYSTEM.

3. THE NEW WET PIPE SYSTEM SUPPLIES WATER TO A HYDRAULICALLY DESIGNED TREE PIPING NETWORK WITH A 4" CROSS MAIN AND 1 1/2", 1 1/4", 1" BRANCH LINES. THE CROSS MAIN PIPE RECEIVES WATER FROM A 4" SYSTEM RISER, INCLUDING A MAIN CONTROL VALVE WITH TAMPER SWITCH AND A MAIN DRAIN VALVE.

4. OCCUPANCY:
OFFICES - LIGHT HAZARD.
APPARATUS BAY - ORDINARY HAZARD GROUP 1
STORAGE AND ELECTRICAL - ORDINARY HAZARD GROUP 2

5. HYDRAULIC DESIGN DATA:

OFFICE:	0.10 gpm/sq.ft. OVER THE MOST REMOTE 1,500sq.ft. MAX 225sq.ft. PER SPRINKLER.
APPARATUS BAY:	0.15 gpm/sq.ft. OVER THE MOST REMOTE 1,500sq.ft. MAX 130sq.ft. PER SPRINKLER.
STORAGE:	0.20 gpm/sq.ft. OVER THE MOST REMOTE 1,500sq.ft. MAX 130sq.ft. PER SPRINKLER.

7. ALL MATERIALS, FABRICATION AND INSTALLATION SHALL BE IN ACCORDANCE WITH NFPA 13, 2016 AND THE AUTHORITY HAVING JURISDICTION.

ALL THREADED PIPING SHALL BE SCHEDULE 40 STEEL PIPE. ALL PIPING GROOVED PIPE SHALL BE SCHEDULE 10 STEEL PIPE OR HEAVIER. WET PIPING SHALL BE BLACK STEEL U.N.O. ALL MATERIAL EXPOSED TO THE OUTSIDE ELEMENTS INCLUDING PIPE, FITTINGS, HANGERS AND DEVICES SHALL BE GALVANIZED, NO EXCEPTIONS.

8. SPRINKLER HEAD SPACING IS PER NFPA 13, 2016 EDITION.

9. FIRE SPRINKLER CONTRACTOR SHALL VISIT THE SITE AND VERIFY ALL CONDITIONS BEFORE ANY FABRICATION AND INSTALLATION HAS BEGUN.

10. FIRE SPRINKLER CONTRACTOR SHALL COORDINATE WORK WITH OTHER TRADES THAT MAY COME INTO CONFLICT BEFORE ANY INSTALLATION.

11. FIRE PROTECTION CONTRACTOR IS RESPONSIBLE FOR FIELD VERIFYING ALL DIMENSIONS.

12. THE FOLLOWING ARE ACCEPTABLE SPRINKLER MATERIAL MANUFACTURERS:
RELIABLE
TYCO
VICTAULIC
VIKING
GLOBE

13. SPRINKLER SYSTEMS, INCLUDING ALL ASSOCIATED FIRE PROTECTION SIGNALS, SHALL BE SUPERVISED BY AN APPROVED CENTRAL, PROPRIETARY, AUXILIARY, OR REMOTE STATION SYSTEM IN ACCORDANCE WITH NFPA.

14. ALL PENETRATIONS THROUGH RATED WALLS TO BE PATCHED AS NECESSARY.

15. FIRE PROTECTION SHOP DRAWINGS, (WORKING DRAWINGS PER NFPA 13, 2016 EDITION) HYDRAULIC CALCULATIONS, AND MATERIAL DATA SUBMITTALS ARE TO BE SUBMITTED TO THE ARCHITECT AND ENGINEER OF RECORD FOR REVIEW AND APPROVAL BEFORE SUBMITTAL TO THE LOCAL AUTHORITY. PARTIAL SUBMITTALS WILL NOT BE ACCEPTED.

16. ALL FIRE SPRINKLER COMPONENTS ARE TO BE RATED FOR THE MAXIMUM SYSTEM WORKING PRESSURE TO WHICH THEY ARE EXPOSED IN ACCORDANCE WITH NFPA 13, 2016 EDITION, SECTION 6.1.3.

17. ALL FIRE SPRINKLER COMPONENTS SHALL BE U.L. AND F.M. APPROVED.

18. TOTAL SQUARE FOOTAGE COVERED BY EACH SPRINKLER SYSTEM:
NEW BUILDING (WET SYSTEM): 6,205sq.ft.

19. OWNER APPROVED SPRINKLER LOCATIONS HAVE BEEN COORDINATED WITH THE ARCHITECTURAL REFLECTED CEILING PLAN. NO DEVIATIONS SHALL BE PERMITTED WITHOUT PRIOR APPROVAL OF THE ARCHITECT.

20. SEE CIVIL SHEET 11 FOR FIRE FLOW INFORMATION.

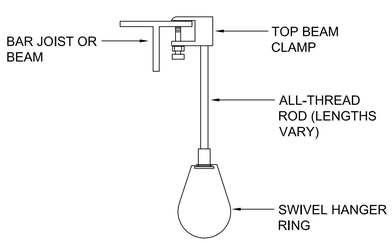

ALL-THREAD ROD SIZES
FOR PIPE UP TO 4" IN DIAMETER, ⅜" ROD TO BE USED
FOR 6" & 8" DIAMETER PIPE, ½" ROD TO BE USED

ALL PIPING SHALL HANG TO THE TOP OF STEEL.

BAR JOIST/BEAM HANGER DETAIL

STEEL PIPE HANGER LOCATION DETAIL			
PIPE SIZE	A	B	C
1"	3'-0" MAX	12'-0" MAX	3" MIN
1 1/4 "	4'-0" MAX	12'-0" MAX	3" MIN
1 1/2 "- 8"	5'-0" MAX	15'-0" MAX	3" MIN

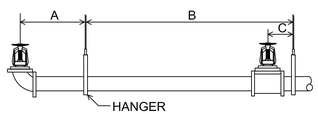

THE UNSUPPORTED LENGTH BETWEEN THE END SPRINKLER AND THE LAST HANGER ON THE LINE SHALL NOT EXCEED 36" FOR 1" PIPE, 48" FOR 1¼" PIPE AND 60" FOR 1½" PIPE OR LARGER.

THE CUMULATIVE HORIZONTAL LENGTH OF AN UNSUPPORTED ARMOVER TO A SPRINKLER, SPRINKLER DROP, OR SPRIG-UP SHALL NOT EXCEED 24".

PIPE HANGER SCHEDULE

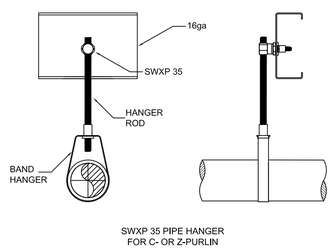

SWXP 35 PIPE HANGER
FOR C- OR Z-PURLIN

ALL-THREAD ROD SIZES
FOR PIPE UP TO 4" IN DIAMETER, ⅜" ROD TO BE USED
FOR 6" & 8" DIAMETER PIPE, ½" ROD TO BE USED

C OR Z-PURLIN HANGER DETAIL

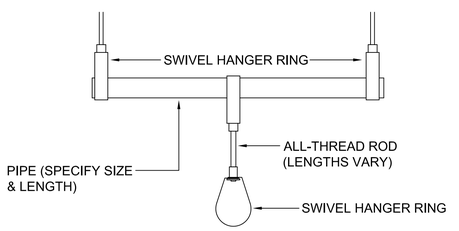

ALL PIPING SHALL HANG TO THE TOP OF STEEL.

TRAPEZE HANGER DETAIL

HALL & OGLE ARCHITECTS, INC.
208 MAGNOLIA AVENUE
DAYTONA BEACH, FLORIDA 32114
www.hoarchitects.com
PH: (386) 255-6163
FAX: (386)257-5650
AA-C000925

SEAL

REVISIONS

NO.	DATE	DESCRIPTION

DOCUMENT HISTORY

Replacement Fire Station # 96
City of Holly Hill, Fl.
1020 Daytona Avenue
Holly Hill , Florida

G & P Engineering LLC
P.O. Box 196725
Winter Springs, FL 32719-6725
(407) 476-3031
Florida PE License #67330
C.A. #29937
FIRE PROTECTION ENGINEERS

ARCHITECT OF RECORD
FADI GHUMRAWI FL PE #67330

DESIGNED BY	DRAWN BY
WP/FG	WP
ISSUE DATE	AE PROJECT NUMBER
18-MAY-2023	2204

SHEET TITLE
FIRE PROTECTION NOTES AND DETAILS

DRAWING NO.
FP1.0

Attachment: Exhibit C - Fire Station #96 Bid Set (2023-R-55 : Fire Station Construction)

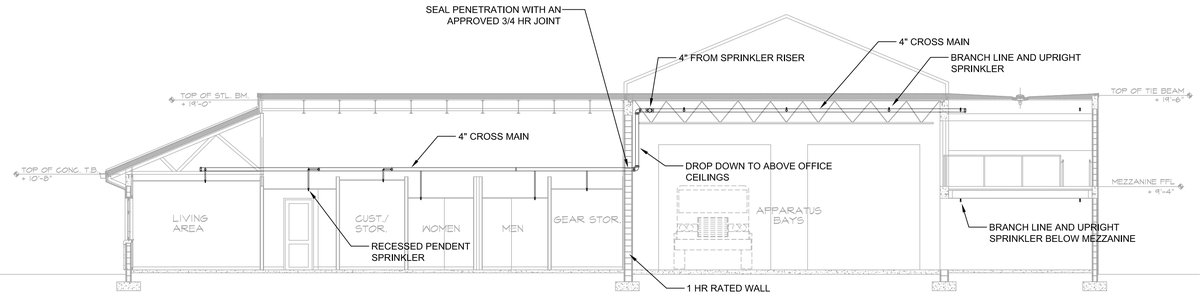

1 FP1.1 BUILDING SECTION

SCALE: 1/8" = 1'-0"

Hydraulic Calculation Data
Design Area Number: 1 Design Area Location: Apparatus Hazard/Occupancy: Ordinary Hazard Group 1 Design Density: 0.15gpm/s.f. Design Area: 1,192s.f. Number of Sprinklers in Design Area: 10
System Flow: 180.65 @ Node BSR (Base of Riser) System Pressure: 21.36 @ Node BSR (Base of Riser) Hose Allowance: 250gpm at Node Point HOSE

SPRINKLER DESIGN AREA REDUCED PER NFPA 13.

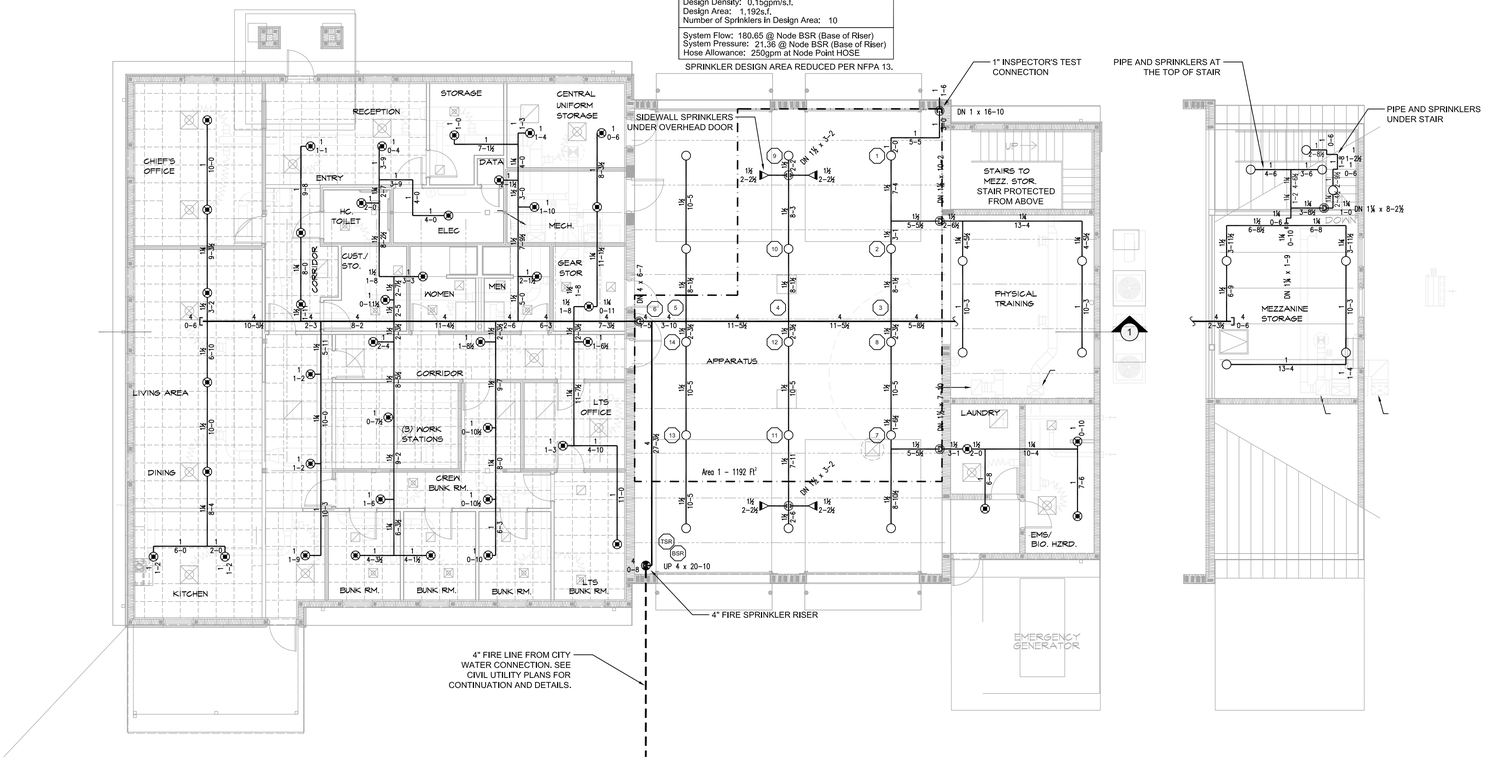

FIRE PROTECTION FLOOR PLAN

6,135 SQFT: FIRST FLOOR
6,500 SQFT: TOTAL

SCALE: 1/8" = 1'-0"

N

Sprinkler Head Schedule					
Symbol	Count	Thread	K-Factor	Description	Note
○	27	1/2"	5.6	VIKING VK300 1/2 QUICK RESPONSE 200° BRASS UPRIGHT	
⊗	42	1/2"	5.6	VIKING VK302 1/2 QUICK RESPONSE 155° CHROME RECESSED PENDENT	ON DROP
◁	4	3/4"	11.2	TYCO TY5332 5/8 STANDARD RESPONSE 200° BRASS EXTENDED SIDEWALL	
73 = Total Number of Heads This Floor					

G & P Engineering LLC
P.O. Box 196725
Winter Springs, FL 32719-6725
(407) 476-3031
Florida PE License #67330
C.A. #29937
FIRE PROTECTION ENGINEERS

HALL & OGLE ARCHITECTS, INC.
208 MAGNOLIA AVENUE
DAYTONA BEACH, FLORIDA 32114
www.hoarchitects.com
PH (386) 255-6163
FAX (386)257-5650
AA-C000925

SEAL

REVISIONS

NO.	DATE	DESCRIPTION

DOCUMENT HISTORY

Replacement Fire Station # 96
City of Holly Hill, Fl.
1020 Daytona Avenue
Holly Hill , Florida

ARCHENGR OF RECORD
FADI GHUMRAWI FL PE #67330

DESIGNED BY	DRAWN BY
WP/FG	WP
ISSUE DATE	AE PROJECT NUMBER
18-MAY-2023	2204

SHEET TITLE
FIRE PROTECTION FLOOR PLAN

DRAWING NO.
FP1.1

Attachment: Exhibit C - Fire Station #96 Bid Set (2023-R-55 : Fire Station Construction)

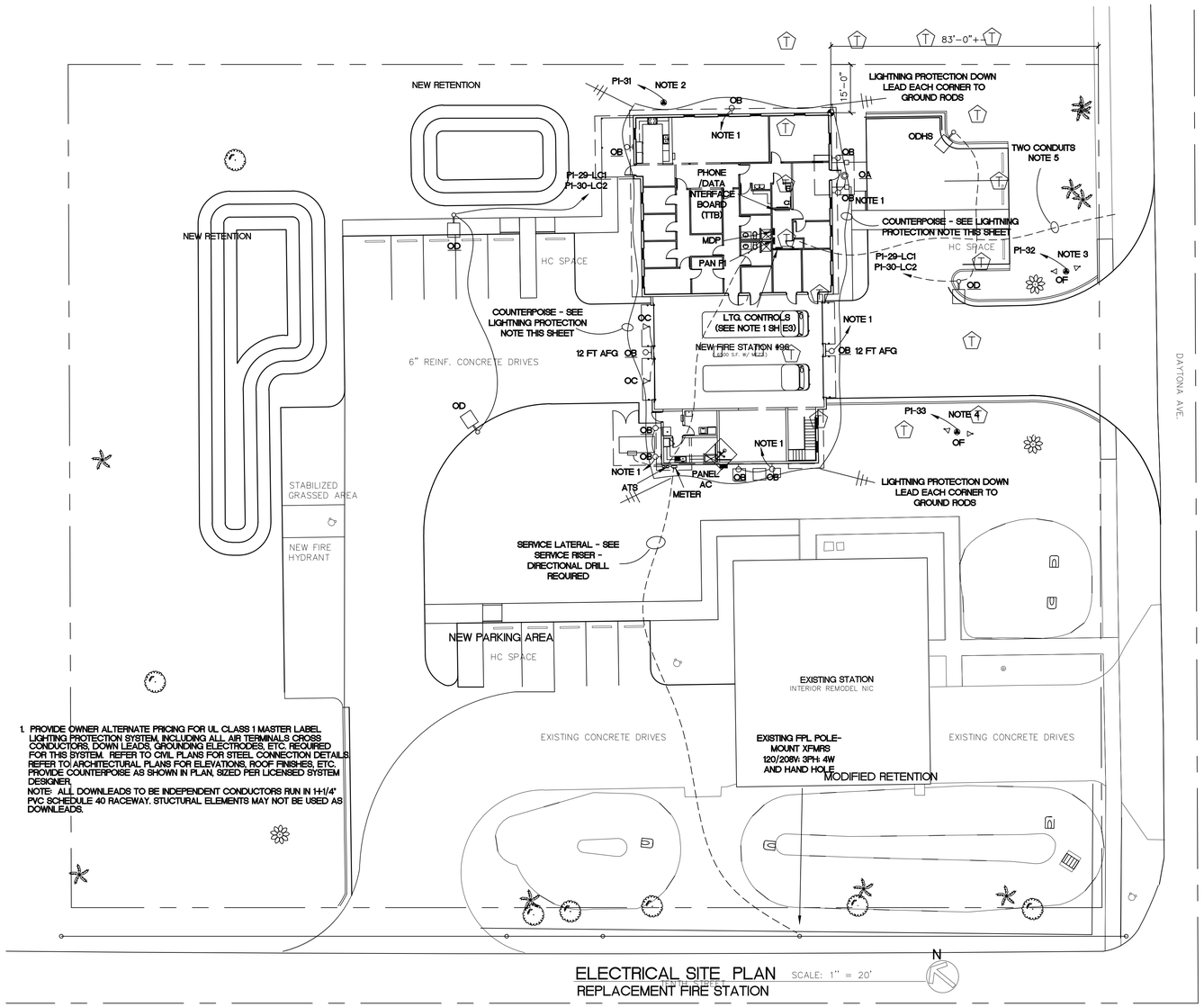

ELECTRICAL SITE PLAN SCALE: 1" = 20'
REPLACEMENT FIRE STATION

ELECTRICAL SITE PLAN NOTES

1. SEE SHEET E3 FOR CIRCUITING OF FIXTURES ON OUTSIDE PERIMETER OF BUILDING.

2. PROVIDE 120 VOLT CIRCUIT INDICATED FOR IRRIGATION CONTROLLER AND VALVE. LOCATION OF CONTROLLER NOT KNOWN AT TIME OF ELECTRICAL DESIGN - COORDINATE REQUIREMENTS WITH IRRIGATION CONTRACTOR.

3. PROJECT SIGN - LOCATION NOT YET DEFINED AT TIME OF THIS DESIGN. COORDINATE LOCATION WITH OWNER'S REP. PROVIDE TWO OUTDOOR SPOT LIGHTS AND CIRCUIT AS INDICATED. SWITCH THROUGH CONTACTOR LC1

4. FLAGPOLE LIGHTING - COORDINATE EXACT LOCATION OF FLAGPOLE AND ORIENTATION OF LIGHT FIXTURES TO BEST ILLUMINATE THIS FEATURE. PROVIDE TWO OUTDOOR SPOT LIGHTS AND CIRCUIT AS SHOWN. SWITCH CIRCUIT FROM APPARATUS BAY.

5. STATION REQUIRES FIBER CONNECTION FROM AT&T AND HIGH QUALITY CONNECTION FROM SPECTRUM. CONTRACTOR TO COORDINATE PROVISION OF ONE 2" PVC FOR AT&T AND ONE 2" PVC FOR SPECTRUM FROM WOOD POLE ON DAYTONA AVE. TO INTERFACE IN DATA CLOSET. COORDINATE DETAILS WITH THOSE SERVICE PROVIDERS AND WITH FIRE STATION TECH SPECIALIST. THIS WORK TO BE PERFORMED TO THE SPECIFICATIONS AND REQUIREMENTS OF AT&T AND SPECTRUM.

LIGHTING FIXTURE SCHEDULE

TYPE	MANUFACTURER	CATALOG NUMBER	LAMPS	MOUNTING
OA	LUMINAIRE	APEX APX13HO-NODIM-50W	LED	CANOPY MOUNT @ CEILING HEIGHT
		40K-120-FCL-BRZ		
OB	LITHONIA	WDGE2-LED-P0-40K-80CRI	LED	EXTERIOR SCONCE WALL MOUNT
		TM3-NLTAIR2-PIR		7 FT AFG UNLESS NOTED OTHERWISE
OC	LITHONIA	WDGE3-LED-P1-70CRI RFT	LED	WALL PACK
		40K-NLTAIR2 PIR		OVER APPARATUS DOORS
OD	LITHONIA	RSX1-LED-P1-40K-R4-	LED	POLE-MOUNT ON 20 FT
		MVOLT-RPA-NLTAIR2		PRECAST CONCRETE DIRECT BURIAL POLE*
		PIRHN-XX		
OD HS	LITHONIA	RSX1-LED-P1-40K-R4-	LED	POLE-MOUNT ON 20 FT
		MVOLT-RPA-HS-NLTAIR2		PRECAST CONCRETE DIRECT BURIAL POLE*
		PIRHN-XX		
OF	HYDREL	SAf7	LED	FLOOD LIGHT SEE PLAN NOTES

*POLES TO BE BY PCSI SPECIALTIES, POMPANO BEACH, FL, (954) 781-4040

JOHN M. PATTERSON
ELECTRICAL CONSULTANT
1291 JOHN ANDERSON DRIVE
ORMOND BEACH, FL 32176
(386) 441-2382
FL REG. PE # 54181

HALL & OGLE
ARCHITECTS, INC.
208 MAGNOLIA AVENUE
DAYTONA BEACH, FLORIDA 32114
www.hoarchitects.com
PH (386) 255-6163
FAX (386)257-5650
AA-C000925

SEAL

REVISIONS

NO.	DATE	DESCRIPTION

DOCUMENT HISTORY

Replacement Fire Station # 96
City of Holly Hill, Fl.
1020 Daytona Avenue
Holly Hill , Florida

ARCHENGR OF RECORD
JOHN E. HALL AR0010727
DAVID D. OGLE AR93986

DESIGNED BY	DRAWN BY
JEH	SC/ JH
ISSUE DATE	AE PROJECT NUMBER
18-MAY-2023	2204

SHEET TITLE
ELECTRICAL SITE PLAN

DRAWING NO.
E1.0

Attachment: Exhibit C - Fire Station #96 Bid Set (2023-R-55 : Fire Station Construction)

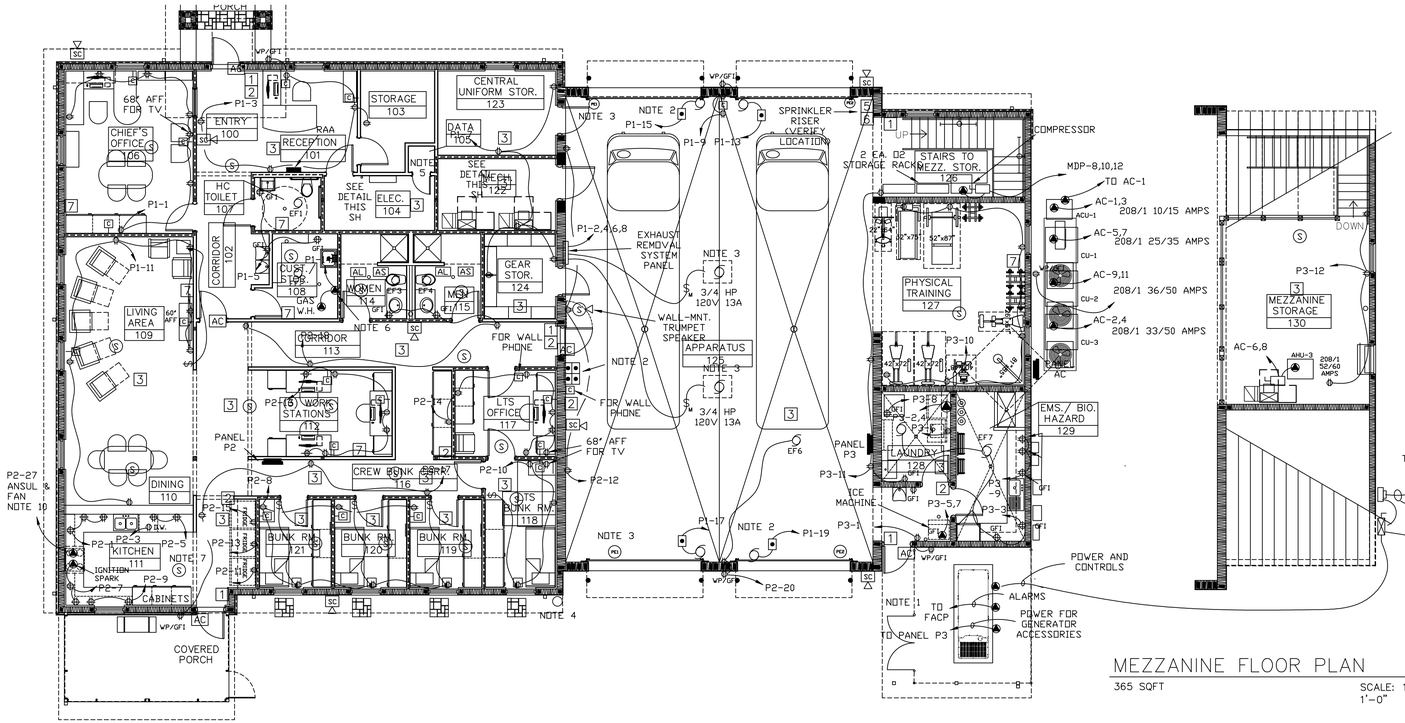

POWER/SYSTEMS FLOOR PLAN

6,135 SQFT: FIRST FLOOR
6,500 SQFT: TOTAL

SCALE: 1/8" = 1'-0"

MEZZANINE FLOOR PLAN

365 SQFT

SCALE: 1/8" = 1'-0"

ELECTRICAL POWER AND SYSTEMS PLAN NOTES

1. FROM GENERATOR - POWER TO ATS - 300 AMPS - SEE RISER
   POWER TO ACCESSORIES - SEE PANEL SCHEDULE P3
   CONTROLS FROM ATS - 6-#12; #12 G. IN 3/4" C.
   ALARMS TO FACP - 6-#12; #12 G. IN 3/4" C.

2. TYPICAL OVERHEAD DOOR OPERATOR INCLUDES A FOUR-DOOR BUTTON ASSEMBLY AT LOCATION INDICATED IN PLAN AND INDIVIDUAL DOOR OPERATORS AT EACH DOOR. PUSH BUTTONS TO BE MOUNTED 48" A.F.F. DOOR MOTORS LOCATED APPROXIMATELY 14 FEET A.F.F.

3. VEHICLE EXHAUST REMOVAL SYSTEM - REFER TO SCHEMATIC THIS SHEET. PHOTO OPERATORS, CONTROL PANEL AND FANS BY SYSTEM SUPPLIER. INSTALL WIRING TO PANEL AND BETWEEN PANEL AND EACH OF TWO FANS. ELECTRICAL CONTRACTOR TO FURNISH AND INSTALL LOCAL DISCONNECTS, LIMIT SWITCHES AND ALL WIRING AND TERMINATIONS.

4. PROVIDE 2" CONDUIT SLEEVE TO ROOF FOR ROOF-MOUNTED RADIO DISPATCH ANTENNA EQUIPMENT. CONDUIT TO BE EMT.

5. DATA CLOSET IN ELECTRICAL ROOM WITH THREE SHELVES, ONE AT 30" A.F.F., ONE AT 42" A.F.F. AND ONE AT 60" A.F.F., ALL CONNECTED BY 4" WIREWAY. PROVIDE DISPATCH RADIO AND TELEMETRY HEAD-END EQUIPMENT, PAGING SYSTEM HEAD-END EQUIPMENT, MODEM, PATCH PANEL AND NETWORK SWITCH BOTH IN A "BLACKBOX" 10U WALLMOUNT CABINET, A FILE SERVER, AM/FM RADIO TUNER, AMPLIFIER(S), ALL LOCATED IN THIS CLOSET.

   PROVIDE 2" CONDUIT TO ANTENNA ON ROOF, 2 EACH, 1" CONDUITS FROM THIS CLOSET TO PHONE DATA BOARD IN ELECTRICAL ROOM, AND 1" CONDUITS FOR USE BY FIRE DEPARTMENT PERSONNEL TO WORKSTATION ROOM 112, TO CHIEF'S OFFICE ROOM 106, TO LIEUTENANTS'S OFFICE ROOM 110, TO KITCHEN AND TO LIVING AREA ROOM 109.

6. PROVIDE 120 VOLT CIRCUIT INDICATED FOR HOT WATER RECIRC PUMP.

7. ALL KITCHEN RECEPTACLES TO BE GFCI TYPE, EXCEPT FOR REFRIGERATOR RECEPTACLES.

8. PAGING SYSTEM TO INCLUDE 8" COAXIAL SPEAKERS WITH BACKBOXES AND GRILLES. CONNECT TO HEAD-END EQUIPMENT IN DATA CLOSET WITH 2-CONDUCTOR #16 PLENUM RATED CABLE. PROVIDE ONE WALL-MOUNTED VOLUME CONTROLLER IN EACH ROOM WHERE CEILING-MOUNTED SPEAKER(S) ARE PRESENT. MAKE PROVISION FOR MICROPHONE TO BE LOCATED IN ROOM 106.

9. FIVE NOTE 9 DOORS TO HAVE CARD READER/ACCESS CONTROL. HEAD END EQUIPMENT TO BE LOCATED IN DATA CLOSET IN ELECTRICAL ROOM. PROVIDE CIRCUIT P1-34

10. ANSUL OR SIMILAR SYSTEM MAY REQUIRE WIRING TO FACP TO SHUT OFF FAN(S).

11. ALL CONDUITS PROVIDED FOR OTHERS TO HAVE PULL STRINGS.

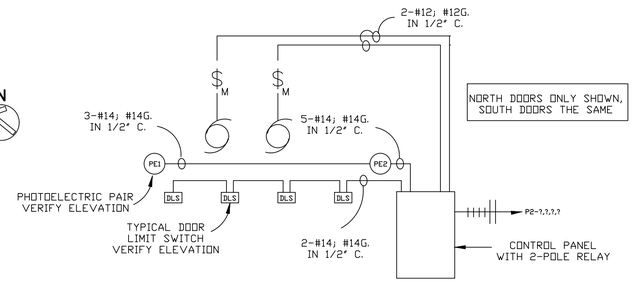

EXHAUST REMOVAL SYSTEM SCHEMATIC - N.T.S.

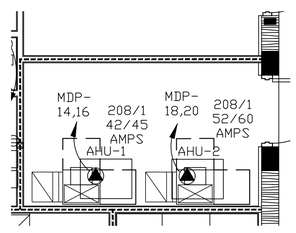

MECHANICAL ROOM

1/4" = 1'-0"

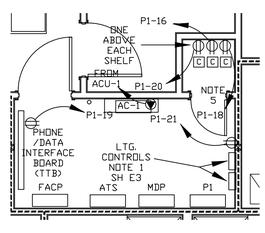

ELECTRICAL & DATA ROOMS

1/4" = 1'-0"

CAT 5 CABLES IN STUB CONDUIT TO CEILING SPACE AND ON TO ELECT./DATA ROOM

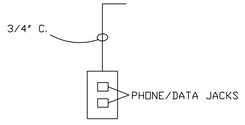

C PHONE/DATA WIRING DETAIL

SIEMENS PANEL: AC
MFG. QR SQ D VOLTAGE 120/208 PHASE 3 WIRE 4
CAT. VARIES AMPS. 150 SYM. A.I.C. (I.E.R.) 22,000
MOUNT SURFACE MAIN M.L.O. GRD. BUS X
WEATHERPROOF NEMA 3R - 18 POLES

CT	DESCRIPTION	POLE	AMPS	WIRE	COND	ØA	ØB	ØC
1,3	ACU-1	2	15	#12	1/2"			
5,7	CU-1	2	35	#8	3/4"			
9,11	CU-2	2	50	#8	3/4"			
2,4	CU-3	2	50	#8	3/4"			
6,8	AHU-3	2	60	#6	3/4"			
10	GFI OUTLET	1	20	#12	1/2"			
12	SPARE	1	20	–	–			

FIRE ALARM LEGEND - N.T.S.

FACP FIRE ALARM CONTROL PANEL
RAA REMOTE ALARM ANNUNCIATOR

1 - MANUAL PULL STATION - 48" AFF TO TOP
2 - HORN/STROBE ASSEMBLY - 80" AFF TO TOP
3 - SMOKE DETECTOR
4 - HEAT DETECTOR
5 - SPRINKLER WATER FLOW SWITCH
6 - SPRINKLER VALVE TAMPER SWITCH
7 - STROBE LIGHT ANNUNCIATOR - 80" AFF

ELECTRICAL CONTRACTOR TO PROVIDE RACEWAYS FOR USE BY FIRE ALARM CONTRACTOR.

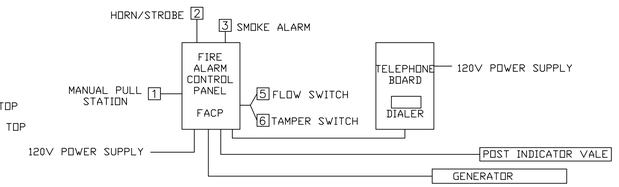

FIRE ALARM SCHEMATIC - N.T.S.

FIRE ALARM NOTES

1. FIRE ALARM SYSTEM TO BE INSTALLED UNDER SEPARATE PERMIT AND INSPECTION.
2. FIRE ALARM CONTRACTOR TO PROVIDE EQUIPMENT SUBMITTALS AND POINT-BY-POINT WIRING DIAGRAM, COPY OF LICENSE, PROOF OF INSURANCE AND OTHER REQUIRED DOCUMENTS WITH PERMIT APPLICATION.
3. FIRE ALARM CONTRACTOR TO BE AUTHORIZED DEALER OF EQUIPMENT BEING FURNISHED. PROVIDE 1 YEAR WARRANTY.
4. ON PROJECT COMPLETION, PROVIDE 18"x24" PLAQUE ADJACENT TO FIRE ALARM CONTROL PANEL INDICATING LOCATION OF ALL INITIATING DEVICES, PHONE NUMBER FOR CENTRAL STATION MONITOR COMPANY, PHONE NUMBER FOR FIRE ALARM INSTALLER SERVICE ORGANIZATION.

FIRE ALARM SYSTEM, INCLUDING FIRE ALARM CONTROL PANEL, INITIATING AND NOTIFICATION DEVICES, POWER SUPPLIES, RELAYS, TAMPER AND FLOW SWITCHES, TELEPHONE DIALER AND ALL LOW VOLTAGE WIRING TO BE FURNISHED AND INSTALLED BY A STATE CERTIFIED AND LOCALLY LICENSED FIRE ALARM CONTRACTOR UNDER SEPARATE PERMIT. CONDUIT FOR THESE DEVICES, INCLUDING TO POST INDICATOR VALVE AND GENERATOR ATS, AS REQUIRED, TO BE FURNISHED AND INSTALLED BY ELECTRICAL CONTRACTOR. 120 VOLT POWER SUPPLIES TO THE TELEPHONE BOARD AND TO THE FACP TO BE BY ELECTRICAL CONTRACTOR.

SIEMENS PANEL: MDP 400 AMP BUS
MFG. QR SQ D VOLTAGE 120/208 PHASE 3 WIRE 4
CAT. VARIES AMPS. 300 SYM. A.I.C. (I.E.R.) 22,000
MOUNT SURFACE MAIN M.L.O. GRD. BUS X
30 POLE PANEL

CT	DESCRIPTION	POLE	AMPS	WIRE	COND	ØA	ØB	ØC
1,3,5	PANEL AC	3	150	1/0	2"			
7,9,11	PANEL P1	3	100	#3	1&1/4"			
13,15,17	PANEL P2	3	100	#3	1&1/4"			
2,4,6	PANEL P3	3	100	#3	1&1/4"			
8,10,12	COMPRESSOR	3	20	#12	1/2"			
14,16	AHU1	2	45	#8	3/4"			
18	SPARE	1	20	–	–			
20,22	AHU2	2	60	#6	3/4"			
19,21	SPARE	2	30	–	–			
23-26	SPARE	1	20	–	–			
27-30	PREPARED SPACE							

COMPRESSOR - VERIFY REQUIREMENTS PRIOR TO CIRCUITING

SIEMENS PANEL: P1
MFG. QR SQ D VOLTAGE 120/208 PHASE 3 WIRE 4
CAT. VARIES AMPS. 100 SYM. A.I.C. (I.E.R.) 22,000
MOUNT SURFACE MAIN M.L.O. GRD. BUS X
42 POLE PANEL

CT	DESCRIPTION	POLE	AMPS	WIRE	COND	ØA	ØB	ØC
1,3,5	OUTLETS	1	X	X	X			
7,9,11	OUTLETS	1	X	X	X			
13,15,17	O/H DOORS	1	20	#12	1/2"			
19	O/H DOORS	1	20	#12	1/2"			
2,4,6,8	EXH. REM. SYST	2	30	#10	3/4"			
10,12	SPARE	2	30	–	–			
14	H.W. RECIRC	1	20	#12	1/2"			
16,18	OUTLETS	1	20	#12	1/2"			
20	OUTLETS	1	20	#12	1/2"			
19	PHONE/DATA	1	20	#12	1/2"			
21	OUTLET	1	20	#12	1/2"			
22,23,24	SPARES	1	20	–	–			
25,26	LIGHTS	1	20	#12	1/2"			
27,29	O/S LS - LC1	1	20	#10	3/4"			
28,30	O/S LS - LC2	1	20	#10	3/4"			
31	IRRIG. CONTROLLER	1	20	#10	1"			
32	PROJECT SIGN	1	20	#10	1"			
33	FLAGPOLE	1	20	#10	1"			
34	ACCESS CONTROLS	1	20	#12	1/2"			
35-42	PREPARED SPACE	1	20					

SIEMENS PANEL: P2
MFG. QR SQ D VOLTAGE 120/208 PHASE 3 WIRE 4
CAT. VARIES AMPS. 100 SYM. A.I.C. (I.E.R.) 22,000
MOUNT FLUSH MAIN M.L.O. GRD. BUS X
42 POLE PANEL

CT	DESCRIPTION	POLE	AMPS	WIRE	COND	ØA	ØB	ØC
1,3,5	OUTLETS	1	20	#12	1/2"			
7,9,11	OUTLETS	1	20	#12	1/2"			
13,15,17	OUTLETS	1	20	#12	1/2"			
2	FAN/LIGHT	1	20	#12	1/2"			
4	SPARE	1	20	–	–			
6	FANS	1	20	#12	1/2"			
8,10,12	OUTLETS	1	20	#12	1/2"			
14,16,18	OUTLETS	1	20	#12	1/2"			
20	OUTLETS	1	20	#12	1/2"			
19,21	FANS	1	20	#12	1/2"			
22,23,24	LIGHTS	1	20	#12	1/2"			
25,26	LIGHTS	1	20	#12	1/2"			
27	ANSUL SYSTEM	1	20	#12	1/2"			
28-30	SPARE	1	20					
31-42	PREPARED SPACE							

SIEMENS PANEL: P3
MFG. QR SQ D VOLTAGE 120/208 PHASE 3 WIRE 4
CAT. VARIES AMPS. 100 SYM. A.I.C. (I.E.R.) 22,000
MOUNT SURFACE MAIN M.L.O. GRD. BUS X
30 POLE PANEL

CT	DESCRIPTION	POLE	AMPS	WIRE	COND	ØA	ØB	ØC
1,3	OUTLETS	1	20	#12	1/2"			
5,7	ICE MACHINE	2	30	#10	X			
9,11	OUTLETS	1	20	#12	1/2"			
2,4	DRYER (IF ELECT)	1	30	#10	3/4"			
6	WASHER	1	20	#12	1/2"			
8,10,12	OUTLETS/MEZZ	1	20	#12	1/2"			
14	BATT CHARGER	1	20	#12	1/2"			
16,18	BLOCK HTR	2	30	#10	3/4"			
13,15,17	SPARE	1	20	–	–			
19	LIGHTS	1	20	#12	1/2"			
20-30	SPARE	1	20	–	–			

VERIFY

JOHN M. PATTERSON
ELECTRICAL CONSULTANT
1291 JOHN ANDERSON DRIVE
ORMOND BEACH, FL 32176
(386) 441-2382
FL REG. PE # 54181

HALL & OGLE ARCHITECTS, INC.
208 MAGNOLIA AVENUE
DAYTONA BEACH, FLORIDA 32114
www.hoarchitects.com
PH (386) 255-6163
FAX (386)257-5650
AA-C000925

SEAL

REVISIONS

NO.	DATE	DESCRIPTION

Replacement Fire Station # 96
City of Holly Hill, Fl.
1020 Daytona Avenue
Holly Hill , Florida

ARCHENGR OF RECORD
JOHN E. HALL AR0010727
DAVID D. OGLE AR93986

DESIGNED BY	DRAWN BY
JEH	SC/ JH

ISSUE DATE	AE PROJECT NUMBER
18-MAY-2023	2204

SHEET TITLE
ELECTRICAL POWER/ SYSTEMS PLAN

DRAWING NO.
E2.0

Attachment: Exhibit C - Fire Station #96 Bid Set (2023-R-55 : Fire Station Construction)

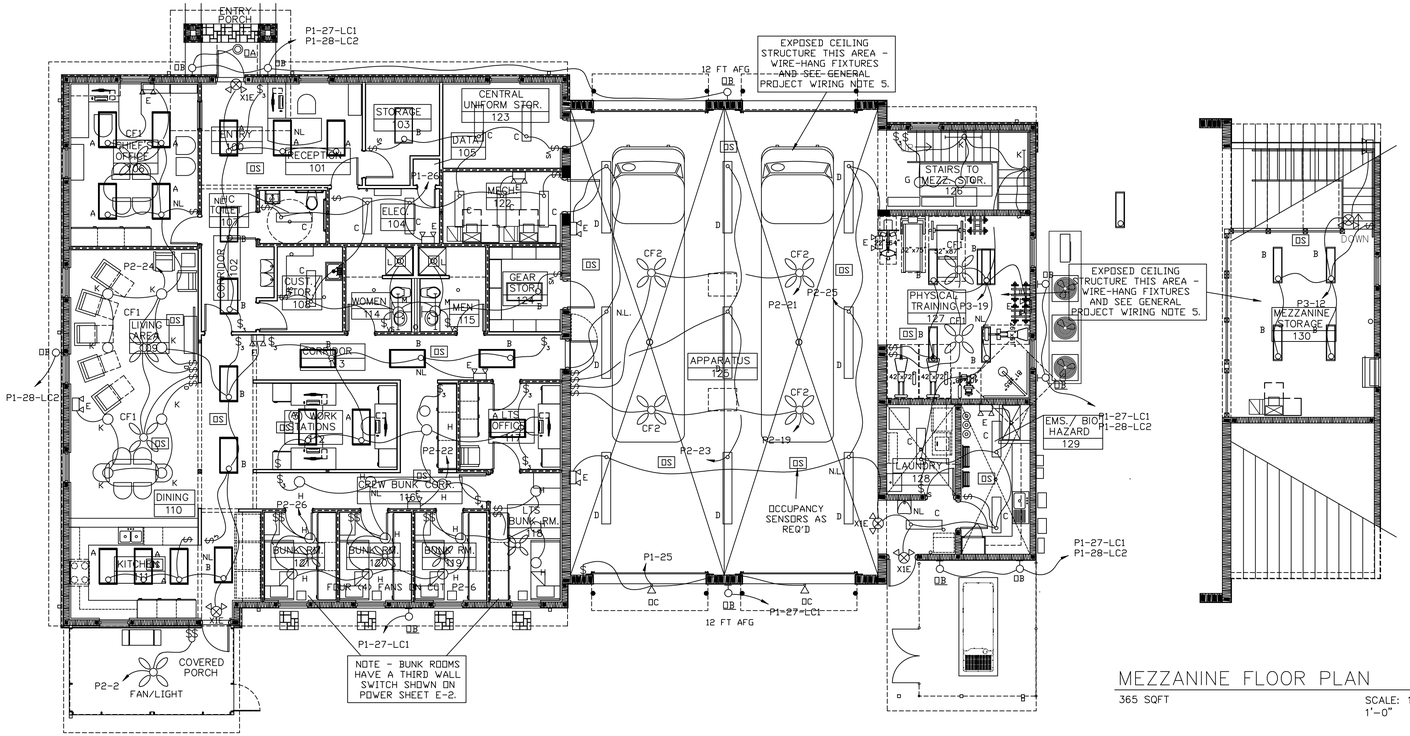

ELECTRICAL LIGHTING PLAN

6,135 SQFT: FIRST FLOOR
6,500 SQFT: TOTAL

SCALE: 1/8" = 1'-0"

MEZZANINE FLOOR PLAN

365 SQFT

SCALE: 1/8" = 1'-0"

ELECTRICAL LEGEND

	LED flat panel fixture
	Recesssed can fixture
	Wall-mount (bracket) fixture
	Duplex receptacle
GFI	Duplex receptacle with ground fault circuit interrupter
WP	Duplex receptacle in weatherproof enclosure
	Duplex receptacle above counter
$	Single pole switch
$2	Two-pole switch
$3	Three way switch
$VS	Vacancy sensing switch
$D	Dimmer switch
OS	Occupancy sensor
S	Ceiling-mounted speaker
SC	Camera - provide wire path (either 3/4" c. or accessible ceiling space) to data closet
A	Capital letters adjacent to fixtures indicate type
J	Disconnect switch
PE	Photoelectric cell
	Equipment connection
	Electrical panel
	Circuit concealed in ceiling or wall
	Circuit concealed in floor or ground
	Home run to panel. Any without further designation indicates a 2 wire circuit.

GENERAL PROJECT WIRING NOTES

1. CONNECT EXIT/EMERGENCY LIGHTING AND NIGHT LIGHTS AHEAD OF LOCAL SWITCHING.

2. VERIFY ROUGH-IN LOCATIONS PRIOR TO INSTALLATION.

3. ALL DEVICES TO BE RATED 20 AMP.

4. BRANCH CIRCUITS SHARING COMMON NEUTRALS IN A SINGLE RACEWAY SHALL HAVE BREAKER TIES INSTALLED. IN NO CASE MAY MORE THAN 3 CIRCUITS SHARE A COMMON NEUTRAL.

5. LIGHT FIXTURES WEIGHING LESS THAN 10 POUNDS SHALL HAVE ONE 12 GAUGE HANGER WIRE CONNECTED FROM THE FIXTURE TO THE STRUCTURE ABOVE. LIGHT FIXTURES WEIGHING MORE THAN 10 POUNDS SHALL HAVE TWO 12 GAUGE WIRES ATTACHED AT OPPOSING CORNERS OF THE LIGHT FIXTURE.

6. ALL WIRING AND CONDUIT SIZES ARE BASED ON THWN/THHN COPPER. ALUMINUM CONDUCTORS MAY BE SUBSTITUTED ABOVE 101 AMPS PROVIDED ADJUSTMENTS IN CONDUCTOR AND CONDUIT SIZES ARE MADE AS PER NEC REQUIREMENTS.

7. ALL WORK IN ACCORDANCE WITH FBC (SEVENTH EDITION) AND NEC 2017 EDITION. ALL BRANCH CONDUCTORS SHALL BE SIZED FOR MAXIMUM VOLTAGE DROP OF 3% AT DESIGN LOAD PER FBC-ENGERGY CONSERVATION C405.7.3.2. FEEDER VOLTAGE DROP SIZED FOR 2% PER FBC-ENGERY CONSERVATION C405.7.3.1.

8. MINIMUM WIRING SIZE IS THWN/THHN #12. MC CABLE PERMITTED ON BRANCH CIRCUITS OF WIRE SIZE #12 AND #10.

9. ALL OUTLETS WITHIN 6-FEET OF SINK TO BE GFI.

10. DIRECT BURIAL RACEWAY TO BE SCHEDULE 80 PVC. RACEWAY EMBEDDED IN CONCRETE SHALL BE SCHEDULE 40 PVC. EXPOSED RACEWAY SHALL BE EMT AND RACEWAY WITHIN WALL AND CEILINGS SHALL BE EMT OR, IF #10 AWG OR SMALLER, MC CABLE.

11. OPERATING AND MAINTENANCE MANUALS ARE TO BE TURNED OVER TO OWNER BY THE ELECTRICAL CONTRACTOR IN ACCORDANCE WITH SECTION 505.7.4.2 OF THE FBC-ENERGY CONSERVATION CODE.

12. CIRCUIT LINES ARE INTENDED TO INDICATE DEVICES ON A SINGLE CIRCUIT, AS WELL AS INTENDED SWITCHING OF LIGHTS, BUT NOT SEQUENCE OF WIRING.

LIGHTING PLAN NOTES

1. EXTERIOR LIGHTING TO BE CONTROLLED AS FOLLOWS: UNDERLINED FIXTURE TYPES TO BE ON DUSK TIL DAWN ON LC1, SWITCHED ON AND OFF BY PHOTOCELL. REMAINDER OF EXTERIOR LIGHTS TO BE ON LC2, SWITCHED ON BY PHOTOCELL AND OFF BY TIME CLOCK. TIME CLOCK TO BE 7-DAY, 24-HOUR PROGRAMMABLE ELECTRONIC CLOCK WITH KEYPAD AND BATTERY BACK-UP.
2. CORRIDORS, KITCHEN AND OTHER AREAS TO HAVE CEILING GRIDS. INSTALLED GRID MAY DIFFER FROM ABOVE LAY-OUT. ADJUST LOCATIONS OF FIXTURES TO ACCOMMODATE ACTUAL INSTALLATION OF GRIDS.

LIGHTING FIXTURE SCHEDULE

TYPE	MANUFACTURER	CATALOG NUMBER	LAMPS	MOUNTING
A	CONTRACTOR SELECTION		LED	HALLWAY 2FT BY 4FT LED FLAT PANEL
B	CONTRACTOR SELECTION			OFFICE AREA 2FT BY 4FT LED FLAT PANEL
C	CONTRACTOR SELECTION			APPROX. 8" BY 4FT LED FLAT PANEL
CF1	CONTRACTOR SELECTION		NO LIGHT	CEILING FAN FOR 8 FOOT CEILING HEIGHT
CF2	CONTRACTOR SELECTION		NO LIGHT	CEILING FAN FOR 14 FOOT CEILING HEIGHT
D	CONTRACTOR SELECTION		LED	APPROX. 12" BY 8FT LED HIGH BAY FIXTURE IN APPARATUS BAY
E	CONTRACTOR SELECTION			EGRESS FIXTURE W/ 15 MINUTE BATTERY
G	CONTRACTOR SELECTION			PENDANT FROM MEZZANINE LEVEL CEILING
H	CONTRACTOR SELECTION			CEILING RECESSED - LOW LUMEN SUITABLE FOR HALLWAYS AND BUNK ROOMS
K	CONTRACTOR SELECTION			CEILING RECESSED - LOW LUMEN SUITABLE FOR READING, GAMES, CARDS; ETC. - DIMMABLE
L	CONTRACTOR SELECTION			VAPOR TIGHT OVER SHOWERS
M	CONTRACTOR SELECTION			BRACKET ABOVE BATH VANITIES
N	CONTRACTOR SELECTION			1FT BY 4FT LED FLAT PANEL
X1E	CONTRACTOR SELECTION			EXIT COMBO (W/ DUAL LIGHT HEADS)

CONTRACTOR TO BASE HIS PROPOSAL BASED ON HIS RECOMMENDATIONS FOR FIXTURES AND FANS. SUBMIT CUT SHEETS FOR EACH. USE LIGHHTING REPRESENTATIVE RECOMMENDATIONS AS TO WATTAGE/LUMENS/ COLOR TEMP. TYPES L, AND M MAY BE OTHER THAN LED.

CEILING PROVIDED BY OTHERS, INSTALLED BY ELECT. CONTRACTOR. PROVIDE NEC COMPLIANT J-BOXES.

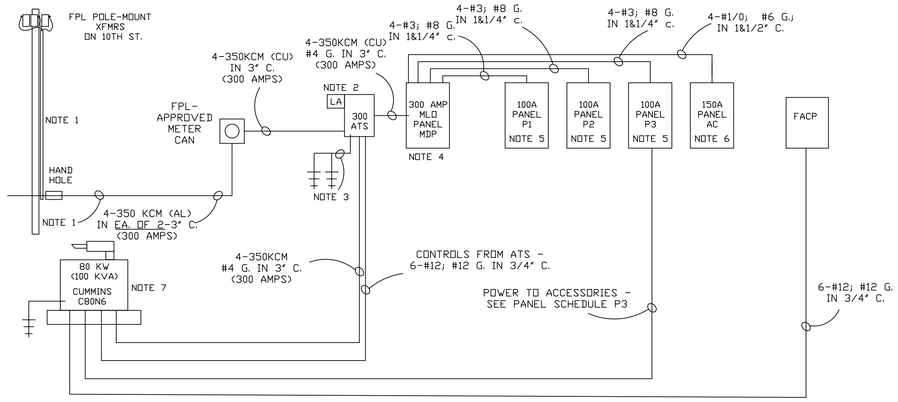

SERVICE RISER DIAGRAM

SERVICE RISER NOTES
1. COORDINATE PROVISION OF FP&L SERVICE FROM EXISTING 3-PHASE TRANSFORMERS MOUNTED ON POLE ON 10TH STREET (NOW SERVING EXISTING FIRE STATION) TO NEW FPL-FURNISHED AND INSTALLED HAND HOLE AT BASE OF POLE. CONTRACTOR TO FURNISH AND INSTALL NEW SERVICE LATERAL FROM HANDHOLE TO NEW METER. GREYSON MALONE (386) 322-3418 IS FP&L SITE REP AND HE IS FAMILIAR WITH THIS PROJECT. ADVISE OWNER'S REP OF ANY FEES PAYABLE TO FP&L BY THE CITY DUE TO THIS PROVISION AS EARLY AS POSSIBLE.
2. PROVIDE METER CAN SUITABLE FOR 300 AMP 3-PHASE SERVICE IN LOCATION SHOWN IN PLANS. PROVIDE SERVICE ENTRANCE RATED AUTOMATIC TRANSFER SWITCH ADJACENT TO METER CAN RATED 300 AMPS, 3-PHASE, 4-WIRE AT 208 VOLTS. PROVIDE NAMEPLATE INDICATING "SERVICE MAIN DISCONNECT.
3. SERVICE GROUND TO BE #1/0 AWG BARE COPPER WIRE, CONNECTED TO NEUTRAL AND GROUND LUGS OF NOTE 2 A.T.S., TO TWO EACH 20-FOOT COPPER CLAD GROUND RODS, TWENTY FEET ON CENTERS, TO BUILDING FOOTER REINFORCING STEEL BAR, AND IF PRESENT, TO METAL WATER PIPE.
4. PANEL MDP TO BE 300 AMP, 120/208 VOLT, 3-PHASE, 4-WIRE MLO PANEL IN NEMA 1 SURFACE MOUNT ENCLOSURE. PROVIDE PANEL DIRECTORY UPON COMPLETION OF WORK.
5. PANELS P1, P2 AND P3 TO BE 100 AMP, 120/208 VOLT, 3-PHASE, 4-WIRE MLO PANELS IN NEMA 1 ENCLOSURES. SEE PANEL SCHEDULES ON SHEET E2.0 FOR PROPOSED CIRCUITING. PROVIDE PANEL DIRECTORIES UPON COMPLETION OF WORK.
6. PANEL AC TO BE 150 AMP, 120/208 VOLT, 3-PHASE, 4-WIRE PANEL IN WEATHERPROOF SURFACE-MOUNT ENCLOSURE. SEE PANEL SCHEDULE ON SHEET E2.0 FOR PROPOSED CIRCUITING. PROVIDE PANEL DIRECTORY UPON COMPLETION OF WORK.
7. GENERATOR - DESIGN BASIS GENERATOR IS 80 KW (100 KVA) CUMMINS C80N6 GAS-FIRED GENERATOR WITH OUTPUT AT 208/120 VOLTS, 3-PHASE, 4-WIRE. WEATHERPROOF ENCLOSURE TO BE SOUND-ATTENUATING AND CAPABLE OF WITHSTANDING 180 MPH WIND LOAD. GENERATOR TO BE EQUIPPED WITH BATTERY AND CHARGING SYSTEM, AND ALARM PACKAGE TO BE WIRED TO ANNUNCIATOR INSIDE LIVING QUARTERS. CONTACT WITH CUMMINS FOR TECH SUPPORT IS CAMERON PLOCH IN TAMPA (813) 205-7006 OR 7008.

JOHN M. PATTERSON
ELECTRICAL CONSULTANT
1291 JOHN ANDERSON DRIVE
ORMOND BEACH, FL 32176
(386) 441-2382
FL REG. PE # 54181

HALL & OGLE
ARCHITECTS, INC.
208 MAGNOLIA AVENUE
DAYTONA BEACH, FLORIDA 32114
PH (386) 255-6163
FAX (386)257-5650
AA-C000925
www.hoarchitects.com

SEAL

REVISIONS

NO.	DATE	DESCRIPTION

DOCUMENT HISTORY

Replacement Fire Station # 96
City of Holly Hill, Fl.
1020 Daytona Avenue
Holly Hill , Florida

ARCHENGR OF RECORD
JOHN E. HALL AR0010727
DAVID D. OGLE AR93986

DESIGNED BY	DRAWN BY
JEH	SC/ JH
ISSUE DATE	AE PROJECT NUMBER
18-MAY-2023	2204

SHEET TITLE
ELECTRICAL LIGHTING PLAN

DRAWING NO.
E3.0

Attachment: Exhibit C - Fire Station #96 Bid Set (2023-R-55 : Fire Station Construction)

SECTION 00 30 00
PROPOSAL

FOR

CITY OF HOLLY HILL

FIRE STATION CONSTRUCTION

BID NO. 22-BG-06

(To be completed in Duplicate)

Bidder's Name: A.G. Pifer Construction, Inc

Submitted: August 29, 2023

City of Holly Hill
City Clerk
1065 Ridgewood Avenue
Holly Hill, FL 32117

To Whom it May Concern:

The undersigned, as Bidder, hereby declares that the only person or persons interested in the Proposal, as principal or principals, is or are named herein and that no other persons than herein mentioned has any interest in the Proposal or the Contract to which the work pertains; that this Proposal is made without connection or arrangement with any other person, company, or parties making a bid or proposal and that the Proposal is in all respects fair and made in good faith without collusion or fraud.

The Bidder further declares that he has examined the site of the work and that from personal knowledge and experience, or that he/she has made sufficient test holes and/or other subsurface investigations to fully satisfy self that such site is a correct and suitable one for this work and he/she assumes full responsibility therefore; that he/she is familiar with all legal requirements (Federal, State and local laws, ordinances, rules and regulations) pertaining to the Work; that he/she has examined the Drawings and Specifications for the work and from his/her own experience or from professional advice that the Drawings and Specifications are sufficient for the work to be done and he/she has examined the other Contract Documents and all addenda relating thereto, and that he/she has satisfied himself/herself fully, relative to all matters and conditions with respect to the work to which this Proposal pertains.

The Bidder proposes and agrees, if this Proposal is accepted, to contract with the City of Holly Hill, (Owner) in the form of contract specified, to furnish all necessary materials, equipment, machinery, tools, apparatus, transportation, and labor and to perform all work necessary to complete the Work

Attachment: Exhibit D - A.G. Pifer Construction - 22-BG-06 Bid Proposal (2023-R-55 : Fire Station Construction)

specified in the Proposal and other Contract Documents. The Bidder further proposes and agrees to comply in all respects with the time limits for commencement and completion of the Work as stated in the Contract Form.

The Bidder further agrees that the deductions for liquidated damages, as stated in the Contract Form, constitute fixed and agreed liquidated damages to reimburse the Owner for additional costs to the Owner resulting from the Work not being completed within the time limit stated in the Contract Form.

The undersigned agrees to accept as full compensation for completion of the project in full compliance with the Contract Documents, the unit prices for the items named in Section 00 31 00, Schedule of Unit Prices, submitted herein with this Proposal.

The undersigned offers to furnish all materials, equipment and labor for construction of,

FIRE STATION CONSTRUCTION

for the City of Holly Hill, Florida, complete in every respect in strict accordance with the drawings, specifications and any future changes therein. The Contractor shall perform these obligations for the prices listed in the "Schedule of Unit Prices: Section 00 31 00" attached and made a part of this Bid. **The bid total is:**

Three Million Nine Hundred Fifty-Three Thousand One Hundred Two Dollars and Sixty-One Cents

(In Words)

Dollars $ 3,953,102.61 (In Figures)

COMPLETION TIME OF CONTRACT

The Contractor agrees that the work shall be started not later than the date indicated in the Notice to Proceed and that the total work shall be completed within **365 days.**

The Contractor further agrees that for each calendar day, with the exception of Sundays and legal holidays that any work shall remain uncompleted after the stations completion times stipulated above the sum of **$500 (Five Hundred Dollars)** per day shall be deducted from monies due the contractor, not as a penalty, but as liquidated damages. If the Contractor is declared in default in accordance with the provisions of the Specifications, liquidated damages shall be charged as provided herein, and such amounts shall be deducted from the final amount payable to the Contractor or his/her Surety. Should the total amount chargeable as liquidated damages exceed the amount due or payable to the Contractor or his/her Surety, then such excess shall be paid to the Owner by the Contractor or his/her Surety.

Attachment: Exhibit D - A.G. Pifer Construction - 22-BG-06 Bid Proposal (2023-R-55 : Fire Station Construction)

SUPPLEMENTAL REQUIREMENTS

The following documents are attached to and made a condition of this bid:

Schedule of Unit Prices: Section 00 31 00
Statement of Bidder's Qualifications: 00 32 00
Listing of Subcontractors: Section 00 33 00
Listing of Previous Experience: Section 00 33 10
Public Entity Crimes Statement: Section 00 47 00
Anti-Collusion Statement: Section 00 48 00
Drug Free/Tie Preference Statement: Section 00 48 50
Compliance with Public Records Law 00 48 60
W-9 Form 00 48 70
E-Verify Compliance 00 48 80
City of Holly Hill Insurance Requirements: Section 00 80 00A

REQUIRED DISCLOSURE

At its sole discretion, the City of Holly Hill, Florida may reject any bidder the City finds to lack, or whose present or former executive employees, officers, directors, stockholders, partners or owners are found by the City to lack honesty, integrity, or moral responsibility. The discretion of the City may be exercised based on the City's own investigation, public records, or any other reliable sources of information. By submitting a bid, bidder recognizes and accepts that the City may reject the bid based upon the exercise of its sole discretion and bidder waives any claim it might have for damages or other relief resulting from the rejection of its bid based on these grounds.

Attachment: Exhibit D - A.G. Pifer Construction - 22-BG-06 Bid Proposal (2023-R-55 : Fire Station Construction)

ACKNOWLEDGMENT OF ADDENDA

Addenda will be issued via email and it is the Bidder's responsibility to confirm that all addenda have been received prior to submitting a bid for the project. Acknowledgment is hereby made of the following Addenda received since issuance of Drawings and Specifications:

Addendum No. 1 Dated: 08/10/23 Addendum No.Dated: 4 08/22/23
Addendum No. 2 Dated: 08/15/23 Addendum No.Dated: 5 08/24/23
Addendum No. 3 Dated: 08/16/23 Addendum No.Dated: 6 08/26/23

Attached hereto is a cashier's check on the N/A Bank of N/A or Bid Bond for the sum of 5% of Total Bid Dollars (_____),

made payable to City of Holly Hill (Owner).

A.G. Pifer Construction, Inc
(Name of Bidder) (Affix Seal)

(Signature of Officer)

President
(Title of Officer)

A.G. Pifer Construction, Inc
Name of Bidder

3629 Old Deland Road
Address

Daytona Beach, FL 32124
City/State/Zip

386-257-4448
Telephone

CGC040437
Contractor's Florida License Number

The full names and residences of persons and firms interested in the foregoing bid, as principals, are as follows:

ANTHONY GREGG PIFER
3629 OLD DELAND ROAD
DAYTONA BEACH FL 32124

END OF SECTION

Attachment: Exhibit D - A.G. Pifer Construction - 22-BG-06 Bid Proposal (2023-R-55 : Fire Station Construction)

SECTION 00 32 00

STATEMENT OF BIDDER'S QUALIFICATIONS

All questions must be answered and the data given must be clear and comprehensive. This statement must be notarized. If necessary, questions may be answered on separate attached sheets. The bidder may submit any additional information he desires.

A. Name of bidder. A.G. Pifer Construction, Inc

B. Permanent main office address. 3629 Old Deland Road, Daytona Beach, FL 32124

C. When organized. December 1988

D. If a corporation, where incorporated. December 1988

E. How many years have you been engaged in the contracting business under your present firm or trade name? 34 Years

F. Contracts on hand: (Schedule these, showing amount of each contract and the appropriate anticipated dates of completion.) Please see attached.

G. General character of work performed by your company. See Attached.

H.(1) Have you ever failed to complete any work awarded to you? If so, where and why? N/A

H.(2) Provide list of any lawsuits or judgments filed by or against your company in the last three years, indicating the nature and outcome. N/A

I. Have you ever defaulted on a contract? If so, where and why? N/A

J. List the more important projects recently completed by your company, stating the approximate cost for each and the month and year completed. See Attached.

K. List your major equipment 43 HP Front End Loader - 5 Company Trucks - Tractor - Scissor Lift - 1/2 Million in Tools and Equipment

L. Experience in construction work similar in type to this project. See Attached

M. Background and experience of the principal members of your organization, including the officers. See Attached.

N. Credit available: $ $1,000,000.00

Attachment: Exhibit D - A.G. Pifer Construction - 22-BG-06 Bid Proposal (2023-R-55 : Fire Station Construction)

O. Give bank reference: Bank of America - Ginger Hakala - 386-947-3798

P. Will you, upon request, fill out a detailed financial statement and furnish any other information that may be required by the Owner? No

Q. The undersigned hereby authorizes and requests any person, firm, or corporation to furnish any information requested by the Owner in verification of the recitals comprising this Statement of Bidder's Qualifications.

Dated at this 29 day of August, 2023.

Anthony Gregg Pifer
Name of Bidder
By: President
Title

State of Florida

County of Volusia

Anthony Gregg Pifer being duly sworn deposes and says that he is the President of A.G. Pifer Construction, Inc and that the answers to the City of Holly Hill foregoing questions
Name of Organization
and all statements therein contained are true and correct.

Subscribed and sworn to before me this 29 day of August, 2023.

Notary Public

Notary Public (Print or Type) My commission expires: 07.11.25

TINA MARIE VOLLMER
Notary Public, State Of Florida
Commission No. HH 151588
My Commission Expires: 7/11/2025

Attachment: Exhibit D - A.G. Pifer Construction - 22-BG-06 Bid Proposal (2023-R-55 : Fire Station Construction)

A. G. PIFER CONSTRUCTION CO., INC.
General Contractor License #CGC040437
3629 Old Deland Road
Daytona Beach, FL 32124
(386) 257-4448 • Fax: (386) 257-5503
www.agpiferconstruction.com • Email: agpiferinc@gmail.com

August 29, 2023

Contracts On Hand – Under Construction

Old Elections Building Demolition and Parking Lot Resurfacing - $796,224.06 – Anticipated Completion October 28, 2023

Marine Science Center Commissary - $311,920.00 – Anticipated Completion September 30, 2023 – Ahead of Schedule

County of Volusia – Riverbreeze Restroom Renovation - $124,400.00 – Anticipated Completion March 30, 2023

Historical Pacetti Hotel Renovation - $2,350,833.44 Anticipated Completion April 30, 2023

Attachment: Exhibit D - A.G. Pifer Construction - 22-BG-06 Bid Proposal (2023-R-55 : Fire Station Construction)

SECTION 00 33 10
LISTING OF PREVIOUS EXPERIENCE

The bidder proposes that he/she is qualified to perform the referenced work and has successfully done so on recent projects similar in nature and size. A minimum of three (3) projects must be listed below. The Owner reserves the right to check references and confirm information provided herein.

NO.	PROJECT	OWNER	DESCRIPTION/COST	REFERENCE	DATE WORK STARTED & FINISHED MM/YR TO MM/YR
1	See Attached				
2					
3					

END OF SECTION

Attachment: Exhibit D - A.G. Pifer Construction - 22-BG-06 Bid Proposal (2023-R-55 : Fire Station Construction)

QUALIFICATIONS PACKAGE

A.G. PIFER CONSTRUCTION CO. INC.

Table of Contents

Tab 1 Statement of Interest and Introductions

Contains a Statement of Interest signed by Mr. Pifer, President.

Tab 2 Company History

Tab 3 Company Qualifications and Capabilities

Contains statements of the company's ability to perform services of this type.

Tab 4 Financial Stability / Bonding Capacity

Contains a statement of the company's past litigation.

Tab 5 Licenses / Insurance

Contains a copy of all current licenses and insurance forms.

Tab 6 Professional References

Contains a list of references and contract termination information.

A.G. Pifer Construction Co. Inc.
3629 Old Deland Road
Daytona Beach, FL 32124
Phone: (386) 257-4448 | Fax: (386) 257-5503
Email: AGPiferInc@gmail.com
Website: www.agpiferconstruction.com

AGP Construction Co. Inc.

It is not the beauty of a building you should look at; it is the construction of the foundation that will stand the test of time.

-David Allan Coe

Bid No. 22-BG-06

City of Holly Hill
1065 Ridgewood Ave
Holly Hill, FL 32117

Fire Station Construction

Bid Date: 08/29/2023
Bid Time: 10:00 am

Attachment: Exhibit D - A.G. Pifer Construction - 22-BG-06 Bid Proposal (2023-R-55 : Fire Station Construction)

Tab 1 Statement of Interest and Introductions **August 29, 2023**

We would like to thank you for giving us the opportunity and consideration to bid on the **Fire Station Construction.** Please accept this correspondence as our Statement of Interest and introductions for qualifications on this and any construction projects you may have on the horizon.

A.G. PIFER CONSTRUCTION CO. INC. has been providing construction services throughout Volusia County from our office located at 3629 Old Deland Road in Daytona Beach, Florida, since our company's inception in 1989. Our company currently employs sixteen people total: three experienced Superintendents, three experienced Construction Foremen, four Carpenters, three Laborers, two Project Managers, and one Office Manager.

A.G. PIFER CONSTRUCTION CO. INC. is a drug free workplace and all employees are prescreened and can be randomly checked for drug use. We have certified our entire staff with Jessica Lunsford Certification through the Volusia County School Board. All employees are Jessica Lunsford Act approved and all have passed background checks to enable them to work on school board projects. All employees sign and adhere to a strict "code of conduct" or company policy.

A.G. PIFER CONSTRUCTION CO. INC. has the ability to provide Payment and Performance Bonds up to 12 million dollars. The company currently has 2 million dollars in General Liability Insurance coverage and Medical coverage with a 2 million dollar aggregate and an additional umbrella policy bringing our total limit to 5 million dollars. These coverages include all our employees. We have never been denied Builder's Risk, General Liability or Worker's Compensation Insurance for any projects.

We have enjoyed a multitude of projects over the past 34 years of service to the Volusia County area and surrounding counties. Please do not hesitate to call us at: (386) 257-4448 with any questions.

As always, it is an honor and pleasure to be of service to you.

Yours Very Truly,

Anthony Gregg Pifer, President

SERVING VOLUSIA COUNTY FOR 34 YEARS!

Attachment: Exhibit D - A.G. Pifer Construction - 22-BG-06 Bid Proposal (2023-R-55 : Fire Station Construction)

Tab 2 Company History

A.G. PIFER CONSTRUCTION CO. INC. was established as a Corporation in 1989, with a small workforce consisting of one laborer and Mr. Pifer as President/Owner and has grown to a competitively sized construction firm with fifteen employees and annual gross sales averaging $7 to $8 million dollars. Mr. Pifer proudly started A.G. Pifer Construction Co. Inc. with a Superintendents weekly paycheck of $360.00 and a lot of prayer.


Original Office 1989

TOP 14 PROJECTS	DESCRIPTION OF WORK	CONTRACT AMOUNT	COMPLETION TIME
1. DLH PORT ORANGE ANNEX	Renovation of the complete building	$1.95 Million	01/2018-11/2018 (10 Months)
2. PORT ORANGE POLICE EVIDENCE	Complete renovate of the Evidence room	$350,000	01/2019-05/2019 (5 months)
3. NEIGHBORHOOD CENTER	New Construction of the Shelter/Laundry Bldg Renovation of the Office Space	$265 Thousand	07/2021-06/2022 Ongoing
4. LIVE OAK CULTURAL CENTER	New Construction	$2.2 Million	02/2018-3/2019 (6 months)
5 SILVER SAND CONDOS	Complete Renovation	$380 Thousand	02/2018-06/2018 (4 months)
6. OLD ELECTIONS DEMO/RESUFACE	Demo of the building/Resurface Entire Parking Area	$798 Thousand	Ongoing
7. VOTRAN ADA BUS STOPS	ADA Bus Stops-Volusia	$1.8 Million	Ongoing
8. CITY OF ORANGE CITY – FS #67	Extension of the Fire Station Bay	$150 Thousand	05/2022-12/2022 (7 months)
9. MSC COMMISSARY BUILDING	Complete Renovation and Addition	$850 Thousand	05/2016-01/2017 (8 Months)
10. CITY OF NEW SMYRNA BEACH	City Hall Annex	$4.3 Million	10/2019-12/2021 (26 Months)
11. COUNTY OF VOLUSIA – MASTER AGREEMENT	Various Projects	Unlimited	Ongoing
12. COUNTY OF VOLUSIA	118 Dunlawton – Roof Repair	$54 Thousand	03/2023-05/2023 (2 months)
13. COUNTY OF VOLUSIA COASTAL	Winterhaven Park – Shower Tower Install	$18 Thousand	03/2023
14. COUNTY OF VOLUSIA	Bethune Park – Window Replacement (w/Turtle Glass) & Railing Repairs	$53 Thousand	04/2023-05/2023 (6 weeks)

Attachment: Exhibit D - A.G. Pifer Construction - 22-BG-06 Bid Proposal (2023-R-55 : Fire Station Construction)

Tab 3 Company Qualifications / Capabilities / Financial Stability

To Whom It May Concern,

We would like to thank you for giving us the opportunity and consideration to bid on the **Fire Station Construction**. Please accept this correspondence as our Statement of our firm's capacity to perform the work within the required schedule.

A.G. PIFER CONSTRUCTION CO. INC., is confident that we are able to dedicate a team to provide Construction Services for the **Fire Station Construction** within the timeframe mentioned in the Request for Expression of Interest and Statement of Qualifications.

A.G. PIFER CONSTRUCTION CO., INC. certifies that we are financially stable and have the necessary resources, human and financial, to provide the services at the level required by **The City of Holly Hill, FL.**

A.G. PIFER CONSTRUCTION CO. INC. has the ability to bond up to $12 Million Dollars. Please see the enclosed Bonding Capacity letter from our bonding agent Nielson, Mosholder and Associates, for confirmation of this capacity. Their contact information is as follows:

Nielson, Mosholder and Associates
Attn: Don Bramlage
4380 St. Johns Parkway,
Suite 110
Sanford, FL 32771
Phone: (407) 330-3990 x 1206 | Fax: (407) 330-3949
dbramlage@nielsonbonds.com

Attachment: Exhibit D - A.G. Pifer Construction - 22-BG-06 Bid Proposal (2023-R-55 : Fire Station Construction)

Bonding Letter

NHC NIELSON, MOSHOLDER & ASSOCIATES

SMART. UNCOMPROMISING. TIMELY. EFFECTIVE. NIELSON, HOOVER & COMPANY, INC. SURETY SOLUTIONS THAT MAKE A DIFFERENCE.

September 23, 2022

Re: A.G. Pifer Construction Co., Inc., 3629 Old Deland Road, Daytona Beach, FL 32124

To Whom it May Concern:

This letter is to serve as a general Statement of Bondability for **A.G. Pifer Construction Co., Inc.** Based upon normal and standard underwriting criteria at the time of the request, we should be in a position to provide Performance and Payment bonds on this account up to $6,000,000 single with a total aggregate program of $12,000,000.

They are currently bonded through Westfield Insurance Company. The Surety Company has an AM Best Rating of A XV.

A.G. Pifer Construction Co., Inc. is an excellent contractor and we hold them in the highest regard. Obviously, we feel extremely confident in our contractor and encourage you to offer them an opportunity to show the quality and professionalism they possess.

This letter is not an assumption of liability, nor is it a bid or performance & payment bond. It is issued only as a bonding reference requested by our respected client. If you should have any questions, please do not hesitate to give me a call

Sincerely,

Don Bramlage

Don Bramlage
Attorney-In-Fact

4380 St. Johns Parkway
Suite 110
Sanford, FL 32771
P: 407.330.3990
F: 407.330.3949
www.nelsonbonds.com

Attachment: Exhibit D - A.G. Pifer Construction - 22-BG-06 Bid Proposal (2023-R-55 : Fire Station Construction)

Tab 4 Licenses / Insurances / Certifications

A.G. PIFER CONSTRUCTION CO. INC. is a state certified General Contractor with well over 50 years of combined construction experience amongst its current sixteen employees.

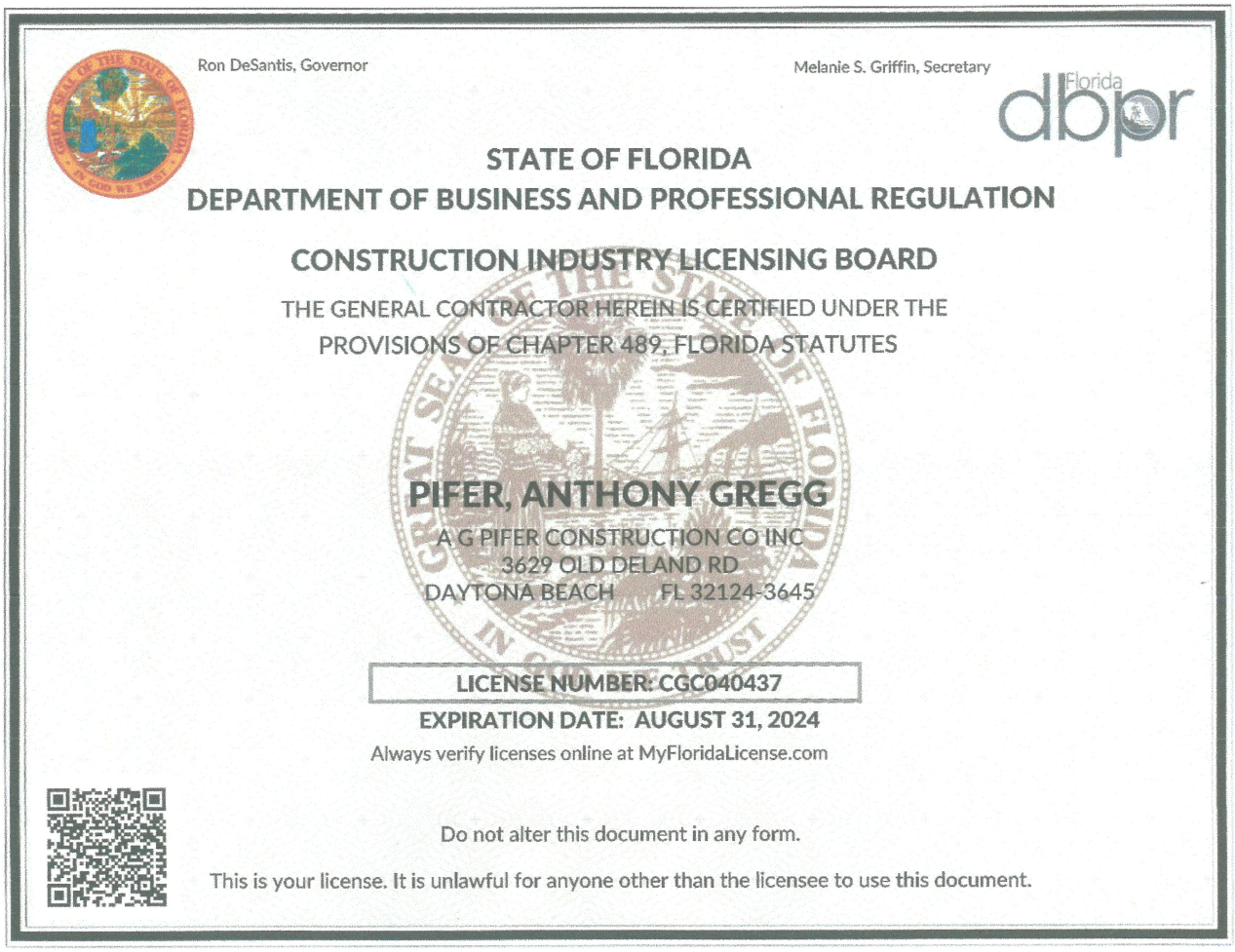

Ron DeSantis, Governor

Melanie S. Griffin, Secretary

Florida dbpr

STATE OF FLORIDA
DEPARTMENT OF BUSINESS AND PROFESSIONAL REGULATION

CONSTRUCTION INDUSTRY LICENSING BOARD

THE GENERAL CONTRACTOR HEREIN IS CERTIFIED UNDER THE PROVISIONS OF CHAPTER 489, FLORIDA STATUTES

PIFER, ANTHONY GREGG
A G PIFER CONSTRUCTION CO INC
3629 OLD DELAND RD
DAYTONA BEACH FL 32124-3645

LICENSE NUMBER: CGC040437
EXPIRATION DATE: AUGUST 31, 2024

Always verify licenses online at MyFloridaLicense.com

Do not alter this document in any form.

This is your license. It is unlawful for anyone other than the licensee to use this document.

Attachment: Exhibit D - A.G. Pifer Construction - 22-BG-06 Bid Proposal (2023-R-55 : Fire Station Construction)

Volusia County Business Tax Receipt

2023 / 2024

Volusia County Business Tax Receipt

Issued pursuant to F.S. 205 and Volusia County Code of Ordinances Chapter 114-1 by:
Volusia County Treasury and Billing - 125 W New York Ave, Room 120, Deland, FL 32720 - (386) 943-7085

Volusia County
FLORIDA

Account #: 198711160004 Expires: September 30, 2024
Business Location: 3629 OLD DELAND RD

Business Name: A G PIFER CONSTRUCTION CO
Owner Name: ANTHONY GREGG PIFER
Mailing Address 3629 OLD DELAND ROAD
DAYTONA BEACH, FL 32124

BUSINESS TYPE	REQ DOC #	CODE	COUNT	TAX
General Contractor Class A	CGC040437	301C	10	$18.00

- This receipt indicates payment of a tax, which is levied for the privilege of doing the type(s) of business listed above within Volusia County. This receipt is non-regulatory in nature and is not meant to be a certification of the holder's ability to perform the service for which he is registered. This receipt also does not indicate that the business is legal or that it is in compliance with State or local laws and regulations.
- The business must meet all County and/or Municipality planning and zoning requirements or this Business Tax Receipt may be revoked and all taxes paid would be forfeited.
- The information contained on this Business Tax Receipt must be kept up to date. Contact the Volusia County Treasury and Billing for instructions on making changes to your account.

THIS PORTION OF THE BUSINESS TAX RECEIPT MUST BE POSTED CONSPICUOUSLY IN YOUR PLACE OF BUSINESS

Volusia County Business Tax Receipt

Treasury and Billing - 125 W New York Ave, Room 120, Deland, FL 32720 - (386) 943-7085

DATE PAID:	07/18/2023
RECEIPT #:	505354
TOTAL TAX:	$18.00
PENALTY:	$0.00
TOTAL PAID:	$18.00

Business Name: A G PIFER CONSTRUCTION CO
Owner Name: ANTHONY GREGG PIFER
Mailing Address 3629 OLD DELAND ROAD
DAYTONA BEACH, FL 32124

Account #: 198711160004 Expires: September 30, 2024
Business Location: 3629 OLD DELAND RD

PLEASE DETATCH THIS PORTION OF THE BUSINESS TAX RECEIPT FOR YOUR RECORDS.

Attachment: Exhibit D - A.G. Pifer Construction - 22-BG-06 Bid Proposal (2023-R-55 : Fire Station Construction)

W-9 Form

Form **W-9**
(Rev. November 2017)
Department of the Treasury
Internal Revenue Service

Request for Taxpayer Identification Number and Certification

▶ Go to *www.irs.gov/FormW9* for instructions and the latest information.

Give Form to the requester. Do not send to the IRS.

Print or type. See Specific Instructions on page 3.

1 Name (as shown on your income tax return). Name is required on this line; do not leave this line blank.

A.G. Pifer Construction Co. Inc.

2 Business name/disregarded entity name, if different from above

3 Check appropriate box for federal tax classification of the person whose name is entered on line 1. Check only one of the following seven boxes.

☐ Individual/sole proprietor or single-member LLC ☐ C Corporation ☑ S Corporation ☐ Partnership ☐ Trust/estate

☐ Limited liability company. Enter the tax classification (C=C corporation, S=S corporation, P=Partnership) ▶ _____

Note: Check the appropriate box in the line above for the tax classification of the single-member owner. Do not check LLC if the LLC is classified as a single-member LLC that is disregarded from the owner unless the owner of the LLC is another LLC that is not disregarded from the owner for U.S. federal tax purposes. Otherwise, a single-member LLC that is disregarded from the owner should check the appropriate box for the tax classification of its owner.

☐ Other (see instructions) ▶

4 Exemptions (codes apply only to certain entities, not individuals; see instructions on page 3):

Exempt payee code (if any) _____

Exemption from FATCA reporting code (if any) _____

(Applies to accounts maintained outside the U.S.)

5 Address (number, street, and apt. or suite no.) See instructions.

3629 Old Deland Road

Requester's name and address (optional)

6 City, state, and ZIP code

Daytona Beach, FL 32124

7 List account number(s) here (optional)

Part I Taxpayer Identification Number (TIN)

Enter your TIN in the appropriate box. The TIN provided must match the name given on line 1 to avoid backup withholding. For individuals, this is generally your social security number (SSN). However, for a resident alien, sole proprietor, or disregarded entity, see the instructions for Part I, later. For other entities, it is your employer identification number (EIN). If you do not have a number, see *How to get a TIN*, later.

Note: If the account is in more than one name, see the instructions for line 1. Also see *What Name and Number To Give the Requester* for guidelines on whose number to enter.

Social security number

			–			–				

or

Employer identification number

5	9	–	2	9	8	6	2	1	9

Part II Certification

Under penalties of perjury, I certify that:

1. The number shown on this form is my correct taxpayer identification number (or I am waiting for a number to be issued to me); and
2. I am not subject to backup withholding because: (a) I am exempt from backup withholding, or (b) I have not been notified by the Internal Revenue Service (IRS) that I am subject to backup withholding as a result of a failure to report all interest or dividends, or (c) the IRS has notified me that I am no longer subject to backup withholding; and
3. I am a U.S. citizen or other U.S. person (defined below); and
4. The FATCA code(s) entered on this form (if any) indicating that I am exempt from FATCA reporting is correct.

Certification instructions. You must cross out item 2 above if you have been notified by the IRS that you are currently subject to backup withholding because you have failed to report all interest and dividends on your tax return. For real estate transactions, item 2 does not apply. For mortgage interest paid, acquisition or abandonment of secured property, cancellation of debt, contributions to an individual retirement arrangement (IRA), and generally, payments other than interest and dividends, you are not required to sign the certification, but you must provide your correct TIN. See the instructions for Part II, later.

Sign Here Signature of U.S. person ▶ [signature] Date ▶

General Instructions

Section references are to the Internal Revenue Code unless otherwise noted.

Future developments. For the latest information about developments related to Form W-9 and its instructions, such as legislation enacted after they were published, go to *www.irs.gov/FormW9*.

Purpose of Form

An individual or entity (Form W-9 requester) who is required to file an information return with the IRS must obtain your correct taxpayer identification number (TIN) which may be your social security number (SSN), individual taxpayer identification number (ITIN), adoption taxpayer identification number (ATIN), or employer identification number (EIN), to report on an information return the amount paid to you, or other amount reportable on an information return. Examples of information returns include, but are not limited to, the following.

- Form 1099-INT (interest earned or paid)
- Form 1099-DIV (dividends, including those from stocks or mutual funds)
- Form 1099-MISC (various types of income, prizes, awards, or gross proceeds)
- Form 1099-B (stock or mutual fund sales and certain other transactions by brokers)
- Form 1099-S (proceeds from real estate transactions)
- Form 1099-K (merchant card and third party network transactions)
- Form 1098 (home mortgage interest), 1098-E (student loan interest), 1098-T (tuition)
- Form 1099-C (canceled debt)
- Form 1099-A (acquisition or abandonment of secured property)

Use Form W-9 only if you are a U.S. person (including a resident alien), to provide your correct TIN.

If you do not return Form W-9 to the requester with a TIN, you might be subject to backup withholding. See What is backup withholding, *later.*

Attachment: Exhibit D - A.G. Pifer Construction - 22-BG-06 Bid Proposal (2023-R-55 : Fire Station Construction)

CERTIFICATE OF LIABILITY INSURANCE

DATE (MM/DD/YYYY) 8/22/2023

THIS CERTIFICATE IS ISSUED AS A MATTER OF INFORMATION ONLY AND CONFERS NO RIGHTS UPON THE CERTIFICATE HOLDER. THIS CERTIFICATE DOES NOT AFFIRMATIVELY OR NEGATIVELY AMEND, EXTEND OR ALTER THE COVERAGE AFFORDED BY THE POLICIES BELOW. THIS CERTIFICATE OF INSURANCE DOES NOT CONSTITUTE A CONTRACT BETWEEN THE ISSUING INSURER(S), AUTHORIZED REPRESENTATIVE OR PRODUCER, AND THE CERTIFICATE HOLDER.

IMPORTANT: If the certificate holder is an ADDITIONAL INSURED, the policy(ies) must have ADDITIONAL INSURED provisions or be endorsed. If SUBROGATION IS WAIVED, subject to the terms and conditions of the policy, certain policies may require an endorsement. A statement on this certificate does not confer rights to the certificate holder in lieu of such endorsement(s).

PRODUCER Apex Insurance Resources LLC 777 Deltona Blvd Suite 28 Deltona FL 32725	CONTACT NAME: Certificates PHONE (A/C, No, Ext): 386-218-2005 FAX (A/C, No): 800-620-8849 E-MAIL ADDRESS: certificates@apexinsuranceresources.com
INSURED AGPIFER-01 AG Pifer Construction Co. Inc. 3629 Old Deland Road Daytona Beach FL 32124	INSURER(S) AFFORDING COVERAGE / NAIC # INSURER A : American Interstate Insurance Company 31895 INSURER B : The Ohio Casualty Insurance Company 24074 INSURER C : Ategrity Specialty Insurance Company INSURER D : Berkley Assurance Company 39462 INSURER E : INSURER F :

COVERAGES **CERTIFICATE NUMBER:** 410198068 **REVISION NUMBER:**

THIS IS TO CERTIFY THAT THE POLICIES OF INSURANCE LISTED BELOW HAVE BEEN ISSUED TO THE INSURED NAMED ABOVE FOR THE POLICY PERIOD INDICATED. NOTWITHSTANDING ANY REQUIREMENT, TERM OR CONDITION OF ANY CONTRACT OR OTHER DOCUMENT WITH RESPECT TO WHICH THIS CERTIFICATE MAY BE ISSUED OR MAY PERTAIN, THE INSURANCE AFFORDED BY THE POLICIES DESCRIBED HEREIN IS SUBJECT TO ALL THE TERMS, EXCLUSIONS AND CONDITIONS OF SUCH POLICIES. LIMITS SHOWN MAY HAVE BEEN REDUCED BY PAID CLAIMS.

INSR LTR	TYPE OF INSURANCE	ADDL INSD	SUBR WVD	POLICY NUMBER	POLICY EFF (MM/DD/YYYY)	POLICY EXP (MM/DD/YYYY)	LIMITS	
D	X COMMERCIAL GENERAL LIABILITY	Y	Y	S30000664943	8/22/2023	8/22/2024	EACH OCCURRENCE	$ 1,000,000
	CLAIMS-MADE [X] OCCUR						DAMAGE TO RENTED PREMISES (Ea occurrence)	$ 100,000
							MED EXP (Any one person)	$ 5,000
							PERSONAL & ADV INJURY	$ 1,000,000
	GEN'L AGGREGATE LIMIT APPLIES PER:						GENERAL AGGREGATE	$ 2,000,000
	POLICY [X] PRO-JECT [ ] LOC						PRODUCTS - COMP/OP AGG	$ 2,000,000
	OTHER:							$
	AUTOMOBILE LIABILITY						COMBINED SINGLE LIMIT (Ea accident)	$
	ANY AUTO						BODILY INJURY (Per person)	$
	OWNED AUTOS ONLY / SCHEDULED AUTOS						BODILY INJURY (Per accident)	$
	HIRED AUTOS ONLY / NON-OWNED AUTOS ONLY						PROPERTY DAMAGE (Per accident)	$
								$
C	UMBRELLA LIAB OCCUR	Y	Y	Q01-B-XL-Q00061053-1	8/22/2023	8/22/2024	EACH OCCURRENCE	$ 3,000,000
	X EXCESS LIAB CLAIMS-MADE						AGGREGATE	$ 3,000,000
	DED [X] RETENTION $ 0							$
A	WORKERS COMPENSATION AND EMPLOYERS' LIABILITY Y/N	N/A	Y	AVWCFL3116772023	8/22/2023	8/22/2024	X PER STATUTE X OTH-ER	
	ANYPROPRIETOR/PARTNER/EXECUTIVE OFFICER/MEMBER EXCLUDED? Y						E.L. EACH ACCIDENT	$ 1,000,000
	(Mandatory in NH) If yes, describe under DESCRIPTION OF OPERATIONS below						E.L. DISEASE - EA EMPLOYEE	$ 1,000,000
							E.L. DISEASE - POLICY LIMIT	$ 1,000,000
B	Installation Floater			BMO63652698	8/22/2023	8/22/2024	Limit of Ins	200,000
B	Equipment Floater			BMO63652698	8/22/2023	8/22/2024	Per Item 1,000	3,000

DESCRIPTION OF OPERATIONS / LOCATIONS / VEHICLES (ACORD 101, Additional Remarks Schedule, may be attached if more space is required)

Owner Anthony G Pifer is Exempt from Workers Compensation coverage.

Certificate Holder is listed as Additional Insured with Ongoing and Completed Operations, Blanket Primary & Noncontributory coverage, Per Project Aggregate, Additional Insured Forms CG20101219 and CG20371219 as required by written contract. General Liability and Workers Compensation include Blanket Waiver of Subrogation as required by written contract. All forms are attached. Excess Liability is follow form

County of Volusia is listed as Additional Insured with respects to General Liability where required by written contract.

CERTIFICATE HOLDER

City of Holly Hill
1065 Ridgewood Ave
Holly Hill, FL 32117

CANCELLATION

SHOULD ANY OF THE ABOVE DESCRIBED POLICIES BE CANCELLED BEFORE THE EXPIRATION DATE THEREOF, NOTICE WILL BE DELIVERED IN ACCORDANCE WITH THE POLICY PROVISIONS.

AUTHORIZED REPRESENTATIVE

© 1988-2015 ACORD CORPORATION. All rights reserved.

Attachment: Exhibit D - A.G. Pifer Construction - 22-BG-06 Bid Proposal (2023-R-55 : Fire Station Construction)

POLICY NUMBER: 30000664943

COMMERCIAL GENERAL LIABILITY
CG 20 10 12 19

THIS ENDORSEMENT CHANGES THE POLICY. PLEASE READ IT CAREFULLY.

ADDITIONAL INSURED – OWNERS, LESSEES OR CONTRACTORS – SCHEDULED PERSON OR ORGANIZATION

This endorsement modifies insurance provided under the following:

COMMERCIAL GENERAL LIABILITY COVERAGE PART

SCHEDULE

Name Of Additional Insured Person(s) Or Organization(s)	Location(s) Of Covered Operations
As required by written contract executed and signed by all parties prior to the date of loss but only to the extent permitted by law. The insurance afforded to such additional insured will not be broader than that which you are required by the contract or agreement to provide for such additional insured.	As designated in written contract with the Named Insured.
Information required to complete this Schedule, if not shown above, will be shown in the Declarations.	

A. Section II – Who Is An Insured is amended to include as an additional insured the person(s) or organization(s) shown in the Schedule, but only with respect to liability for "bodily injury", "property damage" or "personal and advertising injury" caused, in whole or in part, by:

1. Your acts or omissions; or
2. The acts or omissions of those acting on your behalf;

in the performance of your ongoing operations for the additional insured(s) at the location(s) designated above.

However:

1. The insurance afforded to such additional insured only applies to the extent permitted by law; and
2. If coverage provided to the additional insured is required by a contract or agreement, the insurance afforded to such additional insured will not be broader than that which you are required by the contract or agreement to provide for such additional insured.

B. With respect to the insurance afforded to these additional insureds, the following additional exclusions apply:

This insurance does not apply to "bodily injury" or "property damage" occurring after:

1. All work, including materials, parts or equipment furnished in connection with such work, on the project (other than service, maintenance or repairs) to be performed by or on behalf of the additional insured(s) at the location of the covered operations has been completed; or
2. That portion of "your work" out of which the injury or damage arises has been put to its intended use by any person or organization other than another contractor or subcontractor engaged in performing operations for a principal as a part of the same project.

Attachment: Exhibit D - A.G. Pifer Construction - 22-BG-06 Bid Proposal (2023-R-55 : Fire Station Construction)

© Insurance Services Office, Inc., 2018

C. With respect to the insurance afforded to these additional insureds, the following is added to **Section III – Limits Of Insurance:**

If coverage provided to the additional insured is required by a contract or agreement, the most we will pay on behalf of the additional insured is the amount of insurance:

1. Required by the contract or agreement; or

2. Available under the applicable limits of insurance;

whichever is less.

This endorsement shall not increase the applicable limits of insurance.

Attachment: Exhibit D - A.G. Pifer Construction - 22-BG-06 Bid Proposal (2023-R-55 : Fire Station Construction)

© Insurance Services Office, Inc., 2018

POLICY NUMBER: 30000664943

COMMERCIAL GENERAL LIABILITY
CG 20 37 12 19

THIS ENDORSEMENT CHANGES THE POLICY. PLEASE READ IT CAREFULLY.

ADDITIONAL INSURED – OWNERS, LESSEES OR CONTRACTORS – COMPLETED OPERATIONS

This endorsement modifies insurance provided under the following:

COMMERCIAL GENERAL LIABILITY COVERAGE PART
PRODUCTS/COMPLETED OPERATIONS LIABILITY COVERAGE PART

SCHEDULE

Name Of Additional Insured Person(s) Or Organization(s)	Location And Description Of Completed Operations
As required by written contract executed prior to the date of occurrence but only to the extent permitted by law and the insurance afforded to such additional insured will not be broader than that which you are required by the contract or agreement to provide for such additional insured.	As designated in written contract with the Named Insured.
Information required to complete this Schedule, if not shown above, will be shown in the Declarations.	

A. **Section II – Who Is An Insured** is amended to include as an additional insured the person(s) or organization(s) shown in the Schedule, but only with respect to liability for "bodily injury" or "property damage" caused, in whole or in part, by "your work" at the location designated and described in the Schedule of this endorsement performed for that additional insured and included in the "products-completed operations hazard".

However:

1. The insurance afforded to such additional insured only applies to the extent permitted by law; and
2. If coverage provided to the additional insured is required by a contract or agreement, the insurance afforded to such additional insured will not be broader than that which you are required by the contract or agreement to provide for such additional insured.

B. With respect to the insurance afforded to these additional insureds, the following is added to **Section III – Limits Of Insurance:**

If coverage provided to the additional insured is required by a contract or agreement, the most we will pay on behalf of the additional insured is the amount of insurance:

1. Required by the contract or agreement; or
2. Available under the applicable limits of insurance;

whichever is less.

This endorsement shall not increase the applicable limits of insurance.

Attachment: Exhibit D - A.G. Pifer Construction - 22-BG-06 Bid Proposal (2023-R-55 : Fire Station Construction)

© Insurance Services Office, Inc., 2018

THIS ENDORSEMENT CHANGES THE POLICY. PLEASE READ IT CAREFULLY.

PRIMARY AND NONCONTRIBUTORY WORDING

This endorsement modifies insurance provided under the following:

COMMERCIAL GENERAL LIABILITY COVERAGE
PRODUCTS/COMPLETED OPERATIONS LIABILITY COVERAGE

With respect to coverage provided to an additional insured via attachment of an Additional Insured endorsement to this policy, such coverage is primary insurance and we will not seek contribution from any other insurance available to that additional insured.

ALL OTHER TERMS AND CONDITIONS OF THIS POLICY REMAIN UNCHANGED

Attachment: Exhibit D - A.G. Pifer Construction - 22-BG-06 Bid Proposal (2023-R-55 : Fire Station Construction)

THIS ENDORSEMENT CHANGES THE POLICY. PLEASE READ IT CAREFULLY.

DESIGNATED CONSTRUCTION PROJECT(S) GENERAL AGGREGATE LIMIT WITH A CAP

This endorsement modifies insurance provided under the following:

COMMERCIAL GENERAL LIABILITY COVERAGE

SCHEDULE

Designated Construction Projects: Construction project sites at which you perform work for additional insureds that require you to obtain per project general aggregate limits under a written contract that was executed prior to the date of any "occurrence" covered under this policy.
Maximum Aggregate Limit: $5,000,000

A. For all sums which the insured becomes legally obligated to pay as damages caused by "occurrences" under **COVERAGE A BODILY INJURY AND PROPERTY DAMAGE LIABILITY** and for all medical expenses caused by accidents under **COVERAGE C – MEDICAL PAYMENTS**, which can be attributed only to ongoing operations at a single designated construction project shown in the Schedule above:

1. A separate Designated Construction Project General Aggregate limit applies to each designated construction project, subject to an overall maximum aggregate limit as shown in the Schedule above, is equal to the amount of the General Aggregate Limit shown in the Declarations.

2. The Designated Construction Project General Aggregate Limit is the most we will pay for the sum of all damages under **COVERAGE A**, except damages because of "bodily injury" or "property damage" included in the "products-completed operations hazard", and for medical expenses under **COVERAGE C** regardless of the number of:

   a. Insureds; or
   b. Claims made or "suits" brought; or
   c. Persons or organizations making claims or bringing "suits".

3. Any payments made under **COVERAGE A** for damages or under **COVERAGE C** for medical expenses shall reduce the Designated Construction Project Aggregate Limit for that designated construction project. Such payments shall not reduce the General Aggregate Limit shown in the Declarations nor shall they reduce any other Designated Construction Project General Aggregate Limit for any other designated construction project shown in the Schedule above.

4. The limits shown in the Declarations for Each Occurrence, Fire Damage and Medical Expenses continue to apply. However, instead of being subject to the General Aggregate Limit shown in the Declarations, such limits will be subject to the applicable Designated Construction Project General Aggregate Limit.

Attachment: Exhibit D - A.G. Pifer Construction - 22-BG-06 Bid Proposal (2023-R-55 : Fire Station Construction)

B. For all sums which the insured becomes legally obligated to pay as damages caused by "occurrences" under **COVERAGE A** and for all medical expenses caused by accidents under **COVERAGE C**, which cannot be attributed only to ongoing operations at a single designated construction project shown in the Schedule above:

1. Any payments made under **COVERAGE A** for damages or under **COVERAGE C** for medical expenses shall reduce the amount available under the General Aggregate Limit or the Products-Completed Operations Aggregate Limit, whichever is applicable; and

2. Such payments shall not reduce any Designated Construction Project General Aggregate Limit.

C. When coverage for liability arising out of the "products-completed operations hazard" is provided, any payments for damages because of "bodily injury" or "property damage" included in the "products-completed operations hazard" will reduce the Products-Completed Operations Aggregate Limit, and not reduce the General Aggregate Limit nor the Designated Construction Project General Aggregate Limit.

D. If the applicable designated construction project has been abandoned, delayed, or abandoned and then restarted, or if the authorized contracting parties deviate from plans, blueprints, designs, specifications or timetables, the project will still be deemed to be the same construction project.

E. The provisions of LIMITS OF INSURANCE SECTION III not otherwise modified by this endorsement shall continue to apply as stipulated.

ALL OTHER TERMS AND CONDITIONS OF THIS POLICY REMAIN UNCHANGED

Attachment: Exhibit D - A.G. Pifer Construction - 22-BG-06 Bid Proposal (2023-R-55 : Fire Station Construction)

POLICY NUMBER: 30000664943

COMMERCIAL GENERAL LIABILITY
CG 24 04 12 19

THIS ENDORSEMENT CHANGES THE POLICY. PLEASE READ IT CAREFULLY.

WAIVER OF TRANSFER OF RIGHTS OF RECOVERY AGAINST OTHERS TO US (WAIVER OF SUBROGATION)

This endorsement modifies insurance provided under the following:

COMMERCIAL GENERAL LIABILITY COVERAGE PART
ELECTRONIC DATA LIABILITY COVERAGE PART
LIQUOR LIABILITY COVERAGE PART
POLLUTION LIABILITY COVERAGE PART DESIGNATED SITES
POLLUTION LIABILITY LIMITED COVERAGE PART DESIGNATED SITES
PRODUCTS/COMPLETED OPERATIONS LIABILITY COVERAGE PART
RAILROAD PROTECTIVE LIABILITY COVERAGE PART
UNDERGROUND STORAGE TANK POLICY DESIGNATED TANKS

SCHEDULE

Name Of Person(s) Or Organization(s):
Any person or organization to whom or to which you are obligated by virtue of a written contract to waive your right of recovery.
Information required to complete this Schedule, if not shown above, will be shown in the Declarations.

The following is added to Paragraph **8. Transfer Of Rights Of Recovery Against Others To Us** of **Section IV – Conditions:**

We waive any right of recovery against the person(s) or organization(s) shown in the Schedule above because of payments we make under this Coverage Part. Such waiver by us applies only to the extent that the insured has waived its right of recovery against such person(s) or organization(s) prior to loss. This endorsement applies only to the person(s) or organization(s) shown in the Schedule above.

Attachment: Exhibit D - A.G. Pifer Construction - 22-BG-06 Bid Proposal (2023-R-55 : Fire Station Construction)

© Insurance Services Office, Inc., 2018

WAIVER OF OUR RIGHT TO RECOVER FROM OTHERS ENDORSEMENT

We have the right to recover our payments from anyone liable for an injury covered by this policy. We will not enforce our right against the person or organization named in the Schedule. (This agreement applies only to the extent that you perform work under a written contract that requires you to obtain this agreement from us.)

This agreement shall not operate directly or indirectly to benefit anyone not named in the Schedule.

Schedule

1. ◉ Blanket Waiver

   Any person or organization for whom the Named Insured has agreed by written contract to furnish this waiver.

2. Premium: **1.50%**

3. Minimum Premium: **$250.00**

This endorsement changes the policy to which it is attached and is effective on the date issued unless otherwise stated.

(The information below is required only when this endorsement is issued subsequent to preparation of the policy.)

Endorsement Effective 08/22/2023 Policy No. AVWCFL3116772023 Endorsement No.

Insured Premium

AG Pifer Construction Co Inc

Insurance Company Countersigned by _____

AMERICAN INTERSTATE INSURANCE COMPANY - 24759

WC 00 03 13
(Ed. 4-84)

© 1983 National Council on Compensation Insurance.

Attachment: Exhibit D - A.G. Pifer Construction - 22-BG-06 Bid Proposal (2023-R-55 : Fire Station Construction)

CERTIFICATE OF LIABILITY INSURANCE

DATE (MM/DD/YYYY): 08/18/2023

THIS CERTIFICATE IS ISSUED AS A MATTER OF INFORMATION ONLY AND CONFERS NO RIGHTS UPON THE CERTIFICATE HOLDER. THIS CERTIFICATE DOES NOT AFFIRMATIVELY OR NEGATIVELY AMEND, EXTEND OR ALTER THE COVERAGE AFFORDED BY THE POLICIES BELOW. THIS CERTIFICATE OF INSURANCE DOES NOT CONSTITUTE A CONTRACT BETWEEN THE ISSUING INSURER(S), AUTHORIZED REPRESENTATIVE OR PRODUCER, AND THE CERTIFICATE HOLDER.

IMPORTANT: If the certificate holder is an ADDITIONAL INSURED, the policy(ies) must have ADDITIONAL INSURED provisions or be endorsed. If SUBROGATION IS WAIVED, subject to the terms and conditions of the policy, certain policies may require an endorsement. A statement on this certificate does not confer rights to the certificate holder in lieu of such endorsement(s).

PRODUCER

State Farm

SHERRILL SCHULTZ INSURANCE AGENCY
4554 CLYDE MORRI BLVD STE 3
PORT ORANGE FL 32129

CONTACT NAME:
PHONE (A/C, No, Ext): 386-675-6355 **FAX (A/C, No):** 386-675-6559
E-MAIL ADDRESS:

INSURER(S) AFFORDING COVERAGE	NAIC #
INSURER A : State Farm Mutual Automobile Insurance Company	25178
INSURER B :	
INSURER C :	
INSURER D :	
INSURER E :	
INSURER F :	

INSURED

A G PIFER CONSTRUCTION CO INC
3629 OLD DELAND RD
DAYTONA BEACH FL 32124

COVERAGES **CERTIFICATE NUMBER:** **REVISION NUMBER:**

THIS IS TO CERTIFY THAT THE POLICIES OF INSURANCE LISTED BELOW HAVE BEEN ISSUED TO THE INSURED NAMED ABOVE FOR THE POLICY PERIOD INDICATED. NOTWITHSTANDING ANY REQUIREMENT, TERM OR CONDITION OF ANY CONTRACT OR OTHER DOCUMENT WITH RESPECT TO WHICH THIS CERTIFICATE MAY BE ISSUED OR MAY PERTAIN, THE INSURANCE AFFORDED BY THE POLICIES DESCRIBED HEREIN IS SUBJECT TO ALL THE TERMS, EXCLUSIONS AND CONDITIONS OF SUCH POLICIES. LIMITS SHOWN MAY HAVE BEEN REDUCED BY PAID CLAIMS.

INSR LTR	TYPE OF INSURANCE	ADDL INSD	SUBR WVD	POLICY NUMBER	POLICY EFF (MM/DD/YYYY)	POLICY EXP (MM/DD/YYYY)	LIMITS	
A	COMMERCIAL GENERAL LIABILITY ☐ CLAIMS-MADE ☐ OCCUR GEN'L AGGREGATE LIMIT APPLIES PER: ☐ POLICY ☐ PRO-JECT ☐ LOC OTHER:						EACH OCCURRENCE DAMAGE TO RENTED PREMISES (Ea occurrence) MED EXP (Any one person) PERSONAL & ADV INJURY GENERAL AGGREGATE PRODUCTS - COMP/OP AGG	$ $ $ $ $ $
A	AUTOMOBILE LIABILITY ANY AUTO ☐ OWNED AUTOS ONLY ☒ SCHEDULED AUTOS ☐ HIRED AUTOS ONLY ☐ NON-OWNED AUTOS ONLY	Y		J87 1137 B22 59	08/22/2023	08/22/2024	COMBINED SINGLE LIMIT (Ea accident) BODILY INJURY (Per person) BODILY INJURY (Per accident) PROPERTY DAMAGE (Per accident)	$ 1,000,000 $ $ $
	☐ UMBRELLA LIAB ☐ OCCUR ☐ EXCESS LIAB ☐ CLAIMS-MADE ☐ DED ☐ RETENTION $						EACH OCCURRENCE AGGREGATE	$ $
	WORKERS COMPENSATION AND EMPLOYERS' LIABILITY ANY PROPRIETOR/PARTNER/EXECUTIVE OFFICER/MEMBER EXCLUDED? Y / N ☐ (Mandatory in NH) If yes, describe under DESCRIPTION OF OPERATIONS below	N / A					☐ PER STATUTE ☐ OTH-ER E.L. EACH ACCIDENT E.L. DISEASE - EA EMPLOYEE E.L. DISEASE - POLICY LIMIT	 $ $ $

DESCRIPTION OF OPERATIONS / LOCATIONS / VEHICLES (ACORD 101, Additional Remarks Schedule, may be attached if more space is required)

2005 GMC BOX TRUCK 1GDJG31V651907635,2017 RAM 2500 3C6UR5MJ4HG782132,2019 CHEVROLET C1500 3GCNWAEHXKG243337
2014 CHREVROLET C1500 1GCRCPEHXEZ132594,2007 CHEVROLET K3500 1GCHK33687F510733

CERTIFICATE HOLDER

City of Holly Hill
1065 Ridgewood Ave
Holly Hill, FL 32117

CANCELLATION

SHOULD ANY OF THE ABOVE DESCRIBED POLICIES BE CANCELLED BEFORE THE EXPIRATION DATE THEREOF, NOTICE WILL BE DELIVERED IN ACCORDANCE WITH THE POLICY PROVISIONS.

AUTHORIZED REPRESENTATIVE

Laura Eversole

© 1988-2015 ACORD CORPORATION. All rights reserved.

Attachment: Exhibit D - A.G. Pifer Construction - 22-BG-06 Bid Proposal (2023-R-55 : Fire Station Construction)

CERTIFICATE *of* PREQUALIFICATION

THIS IS TO CERTIFY THAT

A.G Pifer Construction Co., Inc.
3629 Old Deland Rd.
Daytona Beach, FL 32124

HAS MET THE SCHOOL BOARD OF VOLUSIA COUNTY, FLORIDA REQUIREMENTS FOR

General Construction
Single $6 Million Aggregate $12 Million

VOLUSIA COUNTY SCHOOLS
Expires
1/26/2024

Dr. Earl Johnson, Chief
Operating Officer

Jamie M. Haynes, Chairman

Dr. Carmen Balgobin
Superintendent of Schools

Tab 5 Client References and Experience for Similar Projects

"Strive not to be a success, but rather to be of value."
-Albert Einstein

Client Reference #1
The City of Port Orange
Susan Lovallo
1000 City Center Circle, Port Orange, FL 32129
Ph: (386) 506-5851
E-mail: slovallo@port-orange.org

Client Reference #2
The Housing Authority of the City of New Smyrna Beach
Teresa Pope
1101 S Dixie Freeway, New Smyrna Beach, FL 32168
Ph: (386) 428-8171
E-mail: tlpope@newsmyrnahousing.com

Client Reference #3
The City of Orange City
David Santiago
229 East Graves Avenue, Orange City, FL 32763
Ph: (386) 775-5440
E-mail: dsantiago@orangecityfl.gov

Client Reference #4
County of Volusia
Jose Alvarez
123 W. Indiana Avenue, Deland, FL 32720
Ph: (386) 248-1760
E-mail: JAlvarez@volusia.org

Client Reference #5
The City of Orange City
Raul Palenzuela
229 East Graves Avenue, Orange City, FL 32763
Ph: (386) 851-7525
E-mail: rpalenzuela@orangecityfl.gov

A.G. Pifer Construction Co. Inc. has never had a contract terminated for any reason

Attachment: Exhibit D - A.G. Pifer Construction - 22-BG-06 Bid Proposal (2023-R-55 : Fire Station Construction)

A.G. PIFER CONSTRUCTION CO. INC.

Mr. Anthony Gregg Pifer



CONTACT INFORMATION
3629 Old Deland Road
Daytona Beach, Florida 32124
Ph: (386) 257-4448
Fx: (386) 257-5503
E-mail: AGPiferInc@gmail.com

Experience
50 Years Experience in Construction

Tenure with AGP
33 Years with A.G.P.

Qualifications
State of Florida Certified General Contractor CGC040437
Jessica Lunsford Certified
LEED Certified

Primary Role
President
Chief Project Manager
Chief Project Coordinator
Chief Executive Officer
Chief Financial Officer

President

A.G. Pifer Construction Co., Inc. was established as a Corporation in December of 1989, with a workforce consisting of one laborer and Anthony Gregg Pifer as President/Owner and has grown to a competitively sized construction company with sixteen employees and annual gross sales averaging $7 to $8 million dollars.

In May of 1988, Mr. Pifer started the company with a Superintendent's weekly paycheck of $360.00 and a lot of prayer.

Mr. Pifer's construction career started in 1972, when a friend's father hired him to move drywall to the second floor of his office building in Pittsburgh, PA. He noticed the framing carpenters building walls and decided it would be a great thing to learn more about. He obtained guidance from one of the finest carpenters he had ever met, even to this day. During the last two years of high school, he entered a trade school called Parkway West Technical School, where he received his technical training regarding construction mechanics. While in technical college, he was put in charge of constructing a four-story classroom building to be used for future students in the facility. This building is still used on campus today.

In 1981, Equity Realty Inc. hired Mr. Pifer over the phone. Their primary business was condominium conversions. After two weeks of employment he was promoted to Head Carpenter, overseeing a 270-unit complex in Altamonte Springs. In the following five months, at the age of twenty-one, he was once again promoted; this time to Head Supervisor in charge of multiple million-dollar projects. At eleven months he was transferred to Daytona Beach to oversee a project, which the budget was about to be exhausted and completion was not in sight. Mr. Pifer successfully completed the project within the anticipated budget.

He then accepted a position with the local Carpenters Union and worked at Epcot Center for seven months. During these months, he excelled in his knowledge of custom construction methods and other trades related to construction. After a few years of constructing both high-rise and low-rise as well as numerous types of other buildings, Mr. Pifer accepted a position with Hall Construction.

Mr. Jim Hall sent Mr. Pifer to Construction Licensing courses to prepare him for the State Certified Contractors' Exam. In May of 1987, Mr. Pifer passed the Contractors' exam and notified Hall Construction Co. that he, with a two-year notice, would be leaving to venture out on his own.

Anthony Gregg Pifer started A.G. Pifer Construction Co., Inc. in Dec of 1989. In the years to come, the firm experienced well controlled growth. This growth included both small and large-scale projects, and no project was unmanaged by Mr. Pifer himself. The reputation of the company grew and to this day, its clients continue to call back for additional projects.

Attachment: Exhibit D - A.G. Pifer Construction - 22-BG-06 Bid Proposal (2023-R-55 : Fire Station Construction)

A.G. PIFER CONSTRUCTION CO. INC.

Mr. William DeMattia

Senior Project Manager



Mr. William DeMattia was hired by Mr. Pifer in October of 2005 at the young age of 21 years old. Eager to learn the construction field, Mr. DeMattia quickly found a place with the A.G. Pifer Construction crew and began developing his vast knowledge of construction.

Throughout his employment with A.G. Pifer Construction Co., Inc., Mr. DeMattia was given the opportunity to manage jobs and repeatedly proved to Mr. Pifer that he had what it took to become a successful Superintendent.

In 2013, Mr. Pifer decided to test Mr. DeMattia and gave him his first Supervision project; Mary Avenue TOT Lot and Restrooms, located at 505 Mary Avenue, New Smyrna Beach, FL. He effectively completed the job on time and without complications, proving to Mr. Pifer that he was a viable asset to the A.G. Pifer Construction family.

One year later, Mr. DeMattia was asked to join the Office Team of A.G. Pifer Construction Co., Inc. as Assistant Project Manager to Mr. Pifer. He has used his vast experience in the field to help Mr. Pifer time-manage projects and deal with any situation that may arise in an effective and knowledgeable manner.

Between 2015 and 2018, Mr. DeMattia was promoted twice; first from Assistant Project Manager to Project Manager/Estimator, and then to Senior Project Manager after proving outstanding management skills and the ability to provide quality estimating services to our clients.

CONTACT INFORMATION

3629 Old Deland Road
Daytona Beach, Florida 32124
Ph: (386) 257-4448
Fx: (386) 257-5503
E-mail: AGPiferInc@gmail.com

Experience
18 Years Experience in Construction

Tenure with AGP
18 Years with A.G.P.

Qualifications
Notary Public
Jessica Lunsford Certified

Primary Role
Vice President
Senior Project Manager
Estimator
Superintendent
Site Coordinator
Client Contact

Attachment: Exhibit D - A.G. Pifer Construction - 22-BG-06 Bid Proposal (2023-R-55 : Fire Station Construction)

A.G. PIFER CONSTRUCTION CO. INC.

Mr. John Griswold

Senior Superintendent

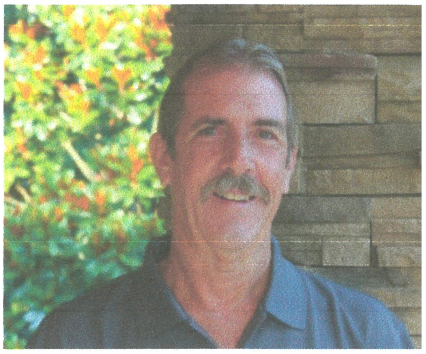

Mr. John Griswold was hired by A.G. Pifer Construction Co., Inc. in April of 2004 as a Project Superintendent with 42 years construction experience. During his employment with A.G. Pifer Construction, Mr. Griswold has constructed over 30 MRI suites as well as many other successful construction projects, including Toronita Off-Beach Parking & Restrooms in Port Orange, FL, for Volusia County and Stadium Bleacher Renovations in New Smyrna Beach, FL for the City of New Smyrna Beach.

Mr. Griswold is known for his effective project supervision and delivering a project ahead of schedule or on time. His problem-solving skills allow the job site to maintain effective workflow and progress. Employees that work under Mr. Griswold will adhere to all OSHA, Drug Free Workplace and Job Safety Standards, to ensure complete compliance of all requirements.

CONTACT INFORMATION

3629 Old Deland Road
Daytona Beach, Florida 32124
Ph: (386) 257-4448
Fx: (386) 257-5503
E-mail: AGPiferInc@gmail.com

Experience
60 Years Experience in Construction

Tenure with AGP
18 Years with A.G.P.

Qualifications
Lead Certified
Jessica Lunsford Certified

Primary Role
Senior Superintendent

Attachment: Exhibit D - A.G. Pifer Construction - 22-BG-06 Bid Proposal (2023-R-55 : Fire Station Construction)

A.G. PIFER CONSTRUCTION CO. INC.

Mr. Zachary Pifer



CONTACT INFORMATION
3629 Old Deland Road
Daytona Beach, Florida 32124
Ph: (386) 257-4448
Fx: (386) 257-5503
E-mail: AGPiferInc@gmail.com

Project Coordinator

Mr. Zachary Pifer was first employed by A.G. Pifer Construction Co. Inc. when he was just 18 years old. Growing up, his father, Mr. Anthony Pifer, President and CEO of A.G. Pifer Construction Co. Inc., would take him around to different jobsites and show him what he was building at the time and how everything came together to reveal a flawless structure at the very end. Little did he know, that these little job site visits after school had solidified an ongoing interest for his son. Mr. Pifer wanted to expand on his knowledge of construction and understand the inner working components of his father's profession and consider being a part of the family business when he got older.

When he first started at A.G. Pifer Construction Co. Inc., Mr. Pifer was in the field as a General Laborer and was engaged in all aspects of construction work. This allowed him to hone in on his skills. This was the opportunity that he was looking for to better himself and become more knowledgeable about the industry as a whole. Mr. Pifer wore multiple hats in the field and jumped in as a Foreman or a Supervisor when needed, depending on the nature of the project.

Mr. Pifer was on path to go to college. Mr. Pifer graduated from High Point University, located in High Point, NC with a Bachelors in Business Administration with a Minor in Sales. Mr. Pifer worked in several different roles that gave him valuable knowledge and experience in: Real Estate, Recruitment & Job Placement, Customer Service, and the Hospitality industry. Ultimately, Mr. Pifer made his way back to Daytona Beach, FL where he was asked to come work as a Project Coordinator for A.G. Pifer Construction Co. Inc.

As a Project Coordinator, Mr. Pifer is responsible for verifying sub-contractor compliance with codes, specifications, regulations, site materials, project blueprints, status reports, and safety guides. He is to assist and help alleviate any potential issues that may arise during any given project. Mr. Pifer contributes much of his time to help assist the Project Management side with active projects as well as schedule and prepare for upcoming projects.

Experience
11 Years Experience in Construction

Tenure with AGP
6 Years

Qualifications
General Construction

Primary Role
Project Coordinator
Site Coordinator
Client Contact

Attachment: Exhibit D - A.G. Pifer Construction - 22-BG-06 Bid Proposal (2023-R-55 : Fire Station Construction)

SECTION *00 33 00*

The Bidder proposes that the following subcontractors are qualified to perform the referenced work and have successfully done so on recent projects similar in nature and size. Upon approval of subcontractors listed the successful bidder shall not substitute subcontractors without approval from the Architect.

SUBCONTRACTOR	COMPANY NAME	REFERENCE
Site Work	Hardy Construction	1) Old Elections Resurfacing 2) MSC Commissary 3) Pacetti Hotel
Electrical	Giles Electric Co Inc	1) MSC Commissary 2) NSB Annex 3) Port Orange Police Dept
Plumbing	G&W Welborn Plumbing	1) MSC Commissary 2) Votran Transfer Station 3) Neighborhood Center
HVAC	DG Meyer	1) Sheriffs Training Building 2) NSB Annex 3) MSC Commissary
Structural Steel	Atlantic Central Enterprises	1) City of Deland - Joyce Cusak 2) NSB - Live Oak Cultural 3) Port Orange Annex
Roof	R&R Industries	1) MSC Commissary 2) Volusia County - Dunlawton 3) NSB Annex

END OF SECTION

Attachment: Exhibit D - A.G. Pifer Construction - 22-BG-06 Bid Proposal (2023-R-55 : Fire Station Construction)

SECTION 00 47 00

SWORN STATEMENT UNDER SECTION 287.133(3)(a), FLORIDA STATUTES, ON PUBLIC ENTITY CRIMES:

This sworn statement is submitted with Bid, Proposal **or** Contract No. 22-BG-06 for Fire Station Construction.

This sworn statement is submitted by A.G. Pifer Construction, Inc whose business address is 3629 Old Deland Road, Daytona Beach, FL 32124 and (if applicable) its Federal Employer Identification Number (FEIN) is 59-2986219. (If the entity has no FEIN, include the Social Security Number of the individual signing this sworn statement: _____.)

My name is Anthony Gregg Pifer any my relationship to the entity named above is President.

I understand that a "public entity crime" as defined in Paragraph 287.133(g), Florida Statutes, means a violation of any state or federal law by a person with respect to and directly related to the transaction of business with any public entity or with an agency or political subdivision of any other state or with the United States, including, but not limited to, any bid or contract for goods or services to be provided to any public entity or an agency or political subdivision of any other state or of the United States and involving antitrust, fraud, theft, bribery, collusion, racketeering, conspiracy, or material misrepresentation.

I understand that "convicted" or "conviction" as defined in Paragraph 287.133(i)(b), Florida Statutes, means a finding of guilt or a conviction of a public entity crime, with or without an adjudication of guilt, in any federal or state trial court of record relating to charges brought by indictment or information after July 1, 1989, as a result of a jury verdict, nonjury trial, or entry of a plea of guilty or nolo contenders.

I understand that an "affiliate" as defined in Paragraph **287.133(l)(a),** Florida Statutes, means:

1. A predecessor or successor of a person convicted of a public entity crime: or

2. An entity under the control of any natural person who is active in the management of the entity and who has been convicted of a public entity crime. The term "affiliate" includes those officers, directors, executives, partners, shareholders, employees, members, and agents who are active in the management of an affiliate. The ownership by one person of shares constituting a controlling interest in another person, or a pooling of equipment or income among persons when not for fair market value under an arm's length agreement,

Attachment: Exhibit D - A.G. Pifer Construction - 22-BG-06 Bid Proposal (2023-R-55 : Fire Station Construction)

shall be a prima facie that one person controls another person. A person who knowingly enters into a joint venture with a
person who has been convicted of a public entity crime in Florida during the preceding 36 months shall be considered an affiliate.

I understand that a "person" as defined in Paragraph 287.133(i)(e), Florida Statutes, means any natural person or entity organized under the laws of any state or of the United States with the legal power to enter into a binding contract and which bids or applies to bid on contracts for the provision of goods or services let by a public entity, or which otherwise transacts or applies to transact business with a public entity. The term "person" includes those officers, directors, executives, partners, shareholders, employees, members, and agents who are active in management of an entity.

Based on information and belief, the statement which I have marked below is true in relation to the entity submitting this sworn statement. (Please indicate which statement applies).

_X_ Neither the entity submitting this sworn statement, nor any officers, directors, executives, partners, shareholders, employees, members or agents who are active in management of the entity, nor any affiliate of the entity have been charged with and convicted of a public entity crime subsequent to July 1, 1989.

_____ The entity submitting this sworn statement, or one or more of the officers, directors, executives, partners, shareholders, employees, members, or agents who are active in management of the entity, or an affiliate of the entity has been charged with and convicted of a public entity crime subsequent to July 1, 1989, AND (Please indicate which additional statement applies.)

_____ There has been a proceeding concerning the conviction before a hearing officer of the State of Florida, Division of Administrative Hearings. The final order entered by the hearing officer did not place the person or affiliate on the convicted vendor list. (Please attach a copy of the final order.)

_____ The person or affiliate was placed on the convicted vendor list. There has been a subsequent proceeding before a hearing officer of the State of Florida, Division of Administrative Hearings. The final order entered by the hearing officer determined that it was in the public interest to remove the person or affiliate from the convicted vendor list. (Please attach a copy of the final order).

Attachment: Exhibit D - A.G. Pifer Construction - 22-BG-06 Bid Proposal (2023-R-55 : Fire Station Construction)

(Signature) _____ Date: 8/29/23

State of Florida County of Volusia

PERSONALLY APPEARED BEFORE ME, the undersigned authority, ANTHONY GREGG PIFER who, after first being sworn by me, affixed his/her signature in the space provided above on this 29 day of AUGUST, 2023

_____
Notary Public

My Commission Expires: 07.11.25

TINA MARIE VOLLMER
Notary Public, State Of Florida
Commission No. HH 151588
My Commission Expires: 7/11/2025

Attachment: Exhibit D - A.G. Pifer Construction - 22-BG-06 Bid Proposal (2023-R-55 : Fire Station Construction)

SECTION 00 48 00
ANTI-COLLUSION STATEMENT

By signing this form, the bidder agrees that this is made without any other understanding, agreement, or connection with any person, corporation, or firm submitting a proposal for the same purpose and that the proposal is in all respects fair and without collusion or fraud.

SIGN in ink in the space provided below. Unsigned bids will be considered incomplete, and will be disqualified, and rejected.

IT IS AGREED BY THE UNDERSIGNED BIDDER THAT THE SIGNING AND DELIVERY OF THE BID REPRESENTS THE BIDDER'S ACCEPTANCE OF THE TERMS AND CONDITIONS OF THE FORGOING SPECIFICATIONS, CONTRACT AND PROVISIONS, AND IF AWARDED, THIS CONTRACT WILL REPRESENT THE AGREEMENT BETWEEN EACH OF THE GOVERNMENTAL PARTIES.

NAME OF FIRM: A.G. Pifer Construction, Inc

SIGNED BY: _____

(MUST BE SIGNED BY A COMPANY OFFICER OR AUTHORIZED AGENT)

TITLE: President

ADDRESS: 3629 Old Deland Road

CITY AND STATE: Daytona Beach, FL 32124

TELEPHONE: 386-257-4448

COMPLETION TIME: T.B.D.

NO proposals will be withdrawn for a period of ninety (90) days subsequent to the opening of the proposals, without the consent of the City of Holly Hill.

NO BID (REASON) _____

_____

_____

END OF SECTION

Attachment: Exhibit D - A.G. Pifer Construction - 22-BG-06 Bid Proposal (2023-R-55 : Fire Station Construction)

SECTION 00 48 50
DRUG FREE/TIE PREFERENCE STATEMENT

In the event of a tie bid a preference is given to vendors submitting a certification with their bid/proposal certifying they have a drug-free workplace in accordance with Section 287.087, Florida Statutes. This requirement affects all public entities of the State and becomes effective January 1, 1991. The special conditions are as follow:

IDENTICAL TIE BIDS - Preference shall be given to businesses with drug-free workplace programs. Whenever two or more bids which are equal with respect to price, quality, and service are received by the State or by any political subdivision for the procurement of commodities or contractual services, a bid received from a business that certifies that it has implemented a drugfree workplace program shall be given preference in the award process. Established procedures for processing tie bids will be followed if none of the tied vendors have a drug-free workplace program. In order to have a drug-free workplace program, a business shall:

1. Publish a statement notifying employees that the unlawful manufacture, distribution, dispensing, possession, or use of a controlled substance is prohibited in the workplace and specifying the actions that will be taken against employees for violations of such prohibition.

2. Inform employees about the dangers of drug abuse in the workplace, the business's policy of maintaining a drug-free workplace, any available drug counseling, rehabilitation and employee assistance programs, and the penalties that may be imposed upon employees for drug abuse violations.

3. Give each employee engaged in providing the commodities or contractual services that are under bid a copy of the statement specified in subsection (1).

4. In the statement specified in subsection (1), notify the employees that, as a condition of working on the commodities or contractual services that are under bid, the employee will abide by the terms of the statement and will notify the employer of any conviction or, or plea of guilty or nolo contendere to, any violation of chapter 893 or of any controlled substance law of the United States or any state, for a violation occurring in the workplace no later than five (5) days after such conviction.

5. Impose a sanction on, or require the satisfaction participation in a drug abuse assistance or rehabilitation program if such is available in the employee's community, by any employee who is so convicted.

6. Make a good faith effort to continue to maintain a drug-free workplace through implementation of this section.

As the person authorized to sign the statement, I certify that this firm complies fully with the above requirements.

_____
VENDOR'S SIGNATURE

END OF SECTION

Attachment: Exhibit D - A.G. Pifer Construction - 22-BG-06 Bid Proposal (2023-R-55 : Fire Station Construction)

SECTION 00 48 60

COMPLIANCE WITH THE PUBLIC RECORDS LAW

Project Number: ITB # 22-BG-06

Upon award recommendation or ten (10) days after opening, submittals become "public records" and shall be subject to public disclosure consistent with Chapter 119, Florida Statutes. Proposers must invoke the exemptions to disclosure provided by law in the response to the solicitation, and must identify the data or other materials to be protected, and must state the reasons why such exclusion from public disclosure is necessary. The submission of a proposal authorizes release of your firm's credit data to the CITY.

If the company submits information exempt from public disclosure, the company must identify with specificity which pages/paragraphs of their bid/proposal package are exempt from the Public Records Act, identifying the specific exemption section that applies to each. The protected information must be submitted to the CITY in a separate envelope marked accordingly.

IF THE CONTRACTOR HAS QUESTIONS REGARDING THE APPLICATION OF CHAPTER 119, FLORIDA STATUTES, TO THE CONTRACTOR'S DUTY TO PROVIDE PUBLIC RECORDS RELATING TO THIS CONTRACT, CONTACT THE CUSTODIAN OF PUBLIC RECORDS AT

Valerie Manning, City Clerk
386-248-9441
vmanning@hollyhillfl.org
1065 Ridgewood Ave
Holly Hill, FL 32117

A provision that requires the contractor to comply with public records laws, specifically to:

1. Keep and maintain public records required by the public agency to perform the service.
2. Upon request from the public agency's custodian of public records, provide the public agency with a copy of the requested records or allow the records to be inspected or copied within a reasonable time at a cost that does not exceed the cost provided in this chapter or as otherwise provided by law.
3. Ensure that public records that are exempt or confidential and exempt from public records disclosure requirements are not disclosed except as authorized by law for the duration of the contract term and following completion of the contract if the contractor does not transfer the records to the public agency.
4. Upon completion of the contract, transfer, at no cost, to the public agency all public records in possession of the contractor or keep and maintain public records required by the public agency to perform the service. If the contractor transfers all public records to the public agency upon completion of the contract, the contractor shall destroy any duplicate public records that are exempt or confidential and exempt from public records disclosure requirements. If the contractor keeps and maintains public records upon completion of the contract, the contractor shall meet all applicable requirements for retaining public records. All records stored electronically must be provided to the public agency, upon request from the public agency's custodian of public records, in a format that is compatible with the information technology systems of the public agency.

By submitting a response to this solicitation, the company agrees to defend the CITY in the event we are forced to litigate the public records status of the company's documents.

Company Name: A.G. Pifer Construction, Inc

Authorized representative (printed): Anthony Gregg Pifer

Authorized representative (signature): 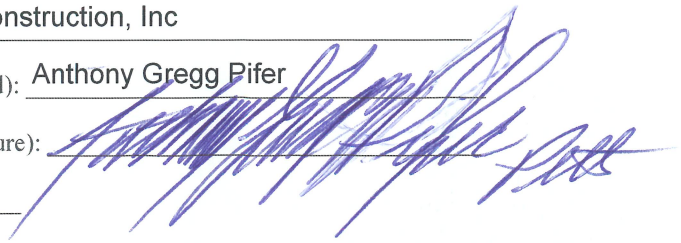

Date: August 29, 2023

END OF SECTION

Attachment: Exhibit D - A.G. Pifer Construction - 22-BG-06 Bid Proposal (2023-R-55 : Fire Station Construction)

SECTION 00 48 80

E-VERIFY COMPLIANCE

Affidavit of E-Verify Requirements Compliance

ITB 22-BG-06

The Consultant/Contractor agrees to comply with Section 448.093, Florida Statutes, and to incorporate in all subcontracts the obligation to comply with Section 448.093, Florida Statutes.

1. The Consultant/Contractor shall utilize the U.S. Department of Homeland Security's E-Verify system to verify the employment eligibility of all new employees hired by the Consultant/Contractor during the term of the Agreement and shall expressly require any subcontractors performing work or providing services pursuant to the Agreement to likewise utilize the U.S. Department of Homeland Security's E-Verify system to verify the employment eligibility of all new employees hired by the subconsultant/subcontractor during the Agreement term.

2. That the Consultant/Contractor understands and agrees that its failure to comply with the verification requirements as set forth herein or its failure to ensure that all employees and subconsultant/subcontractors performing work under this Agreement are legally authorized to work in the United States and the State of Florida constitute a breach of this Agreement for which the City may immediately terminate the Agreement without notice and without penalty. The Consultant/Contractor further understands and agrees that in the event of such termination, the Consultant/Contractor shall be liable to the City for any costs incurred by the City as a result of the Consultant's/Contractor's breach

Consultant/Contractor shall execute and return the Affidavit of E-Verify Requirements Compliance to City. IN WITNESS WHEREOF, the parties have made and executed this Agreement for the purposes stated above.

A.G. Pifer Construction, Inc
3629 Old Deland Road
Daytona Beach, FL 32124

Consultant/Contractor Name and Address

Signature

Anthony Gregg Pifer, President

Name and Title

Attachment: Exhibit D - A.G. Pifer Construction - 22-BG-06 Bid Proposal (2023-R-55 : Fire Station Construction)

SECTION 00 50 00

AGREEMENT

THIS AGREEMENT, entered into this ____ day of _____, 20__, by the City of Holly Hill, Florida, hereinafter called the OWNER, Party of the First Part, and a CORPORATION known as _____organized and existing under the laws of the State of_____; PARTNERSHIP known as _____ consisting of the following members: _____ an INDIVIDUAL _____trading as_____ of _____City_____State of_____ Zip Code _____, hereinafter called the CONTRACTOR, Party of the Second Part.

WITNESSETH: That the parties hereto do mutually agree as follows:

ARTICLE I.

A. The Contractor agrees to furnish all labor, materials, equipment for:

FIRE STATION CONSTRUCTION

herein called for, in strict accordance with the Drawings and Specifications prepared by Hall & Ogle Architects, Inc., which Contract include, but is not limited to, the following Contract Documents:

a. Invitation
b. Instructions
c. Proposal
d. This Agreement
e. Insurance
f. Specifications
g. Addenda (if any)
h. Drawings

ARTICLE II.

A. The Contractor agrees that the work shall be started not later than the date indicated in the Notice to Proceed and that all work shall be completed within **365 days.**

B. The Contractor further agrees that for each calendar day, with the exception of Sundays and legal holidays, which any work shall remain uncompleted after the stations completion times stipulated above, the sum of **$500 (FIVE HUNDRED DOLLARS)** shall be deducted from monies due the Contractor, not as a penalty, but as liquidated damages. If the Contractor is declared in default in accordance with the provisions of the Specifications, liquidated damages shall be charged as provided herein, and such amounts shall be deducted from the final amount payable to the Contractor or his Surety. Should the total amount chargeable as liquidated

Attachment: Exhibit D - A.G. Pifer Construction - 22-BG-06 Bid Proposal (2023-R-55 : Fire Station Construction)

damages exceed the amount due or payable to the Contractor or his Surety, then such excess shall be paid to the Owner by the Contractor or his Surety.

ARTICLE III.

A. The Contractor shall receive and accept the compensation for the performance of the Contract (subject to additions or deductions noted therein) in accordance with the prices stipulated in the Proposal, and in the manner provided in Article IV for the Contract Price of $_____ and for additions or revisions approved in Change Orders at Unit Prices.

ARTICLE IV.

A. Payment to the Contractor shall be made as follows:

1. Not later than the fifteenth (15th) day of each calendar month, the Owner will make a partial payment to the Contractor on the basis of a duly certified and approved estimate by the Engineer of the work performed during the preceding calendar month under this Contract, and (at the option of the City) an amount equal to 50% of materials and equipment not incorporated in the work but delivered and suitably stored. When payment to the Contractor is made for stored materials and equipment, Contractor shall submit invoices marked paid by the supplier with the next month's request for payment to document that Contractor has paid for said materials and equipment or the previously paid amount for stored materials shall be deducted from any remaining payment(s) for any stored materials not so properly documented. To insure the proper performance of this Contract, the Owner will retain ten percent (5%) of the amount of each estimate.

2. .

2. Upon completion of the entire work under Contract, the Engineer shall make a final inspection and certify such completion to the Owner. Upon approval of the completion certificate by the Owner, the Owner shall notify the Contractor and the Surety of the satisfactory completion of the work and except as otherwise provided in the Specifications, final payment therefore shall be made to the Contractor within thirty (30) days after written acceptance by the Contractor of the final certificate computation. ARTICLE V.

A. The Contract shall not sublet, sell, transfer, assign, or otherwise dispose of the Contract or any portion thereof, or his right, title or interest therein, without written consent of the Owner.

ARTICLE VI.

Attachment: Exhibit D - A.G. Pifer Construction - 22-BG-06 Bid Proposal (2023-R-55 : Fire Station Construction)

A. The work shall be subject at all times to the supervision of the Engineer and his authorized assistants. The Engineer shall decide all questions which may arise relative to the Drawings, Specifications, and the performance of the work. Any doubt concerning the meaning of the Specifications and the Drawings, or any ambiguity or obscurity as to wording or intent of them shall be decided by the Engineer, and such decisions shall be binding upon both parties hereto, and shall not be subject to arbitration.

ARTICLE VII.

A. The Contractor shall guarantee his work and shall remedy, without cost to the Owner, any defects which may develop therein during a period of one (1) year from the date of the Owner's approval of the Completion Certificate issued by the Engineer.

ARTICLE VIII.

A. In the event of conflict between any of the Contract Documents, the provisions of this Agreement shall govern.

IN WITNESS WHEREOF, the Parties hereto have signed this Contract in quintuplicate the day and year first above written.

ATTEST: CITY OF HOLLY HILL, FLORIDA

By_____

Valerie Manning Joseph A. Forte

Title City Clerk Title City Manager

_____

WITNESS: CONTRACTOR

_____ By_____

END OF SECTION

Attachment: Exhibit D - A.G. Pifer Construction - 22-BG-06 Bid Proposal (2023-R-55 : Fire Station Construction)

SECTION 00 67 00

CONTRACTOR'S STATEMENT UNDER OATH, TO OWNER

To: _____

_____

The undersigned as Contractor has heretofore, on the ___ day of _____, 20 , has been awarded a Contract by you, as Owner, to furnish all the materials and labor in the construction of a project entitled: _____ for the Contract Price of in accordance with plans and specifications therefore as prepared by Hall & Ogle Architects, Inc., located at 208 Magnolia Avenue, Daytona Beach, Florida 32114.

Said project has been completed and the Contract and Plans therefore fully complied with and all of the Contract Price has been paid by you, except the Final Payment thereon, which is now due, but is being withheld until a sworn statement is furnished, as required by _____showing whether there are any unpaid and outstanding bills in connection with said Project.

The undersigned hereby certified, under oath, that all lienors contracting directly with or directly employed by the undersigned, on said Contract, have been paid in full, and further certifies, under oath, that there are no outstanding or unpaid bills for labor performed, or materials furnished in connection with said work or improvements.

Dated at _____ this ___ day of _____, 20___.

By _____
Contractor

State of _____

County of _____

Sworn to and subscribed before me this _____ day of _____, 20 _____.

_____
Notary Public

My Commission Expires: _____

END OF SECTION 00 67 00 - 01

Attachment: Exhibit D - A.G. Pifer Construction - 22-BG-06 Bid Proposal (2023-R-55 : Fire Station Construction)

SECTION 00 08 00A

CONTRACTORS STANDARD INSURANCE REQUIREMENTS AND INDEMNIFICATION CLAUSE

I. INSURANCE

A. Prior to commencing work, the Contractor shall provide at his own cost and expense insurance to the City of HOLLY HILL as required below. The insurance companies must be licensed in the State of Florida and be rated by A.M. Best as A: Class X or better. The required insurance shall be evidenced by certificates and/or policies as determined by the City. All policies and certificates of insurance shall be approved by the City prior to inception of any work.

B. It is required that each Certificate of Insurance and/or policy must give 30 days prior written notice of cancellation, non-renewal or adverse change to the City of HOLLY HILL Finance Department by registered mail, return receipt requested. All such notices shall name the Contractor and identify the contract number.

C. The "City of HOLLY HILL," wherever used, shall be defined to include the City itself, elected officials, officers, employees, volunteers, representatives, agents and any affiliates.

D. The "Contractor," wherever used, shall be defined to include the Contractor, any subsidiaries or affiliates, officers, employees, volunteers, representatives, agents, contractors and subcontractors.

E. If at any time any of the required policies shall be or shall become unsatisfactory to the City as to form or substance, or if the insurance company becomes unsatisfactory to the City, the Contractor shall, upon written notice to that effect from the City, promptly obtain a new policy, submit the policy to the City for approval, and submit the Certificate of Insurance, as previously required.

If at any time the Contractor shall fail to furnish and/or maintain the required insurance, this contract may be declared suspended, discontinued or terminated, at the discretion of the City. Failure of the Contractor to take out and/or maintain any of the required insurances shall not relieve the Contractor from any liability under the contract, nor shall the insurance requirements be construed to conflict with or otherwise limit the obligations of the Contractor concerning indemnification.

F. The Contractor is required to provide new Certificates of Insurance to the City at least 20 days prior to the coverage renewal dates. If any of the insurance requirements are not complied with at their renewal dates, the City may at their option, (1) withhold payments to the Contractor until those requirements have been met or, (2) pay the renewal premium and withhold such payments from any monies due the Contractor.

G. In the event of any claims having been filed due to any operation under this contract that are in excess of the insured amounts, the excess amount of such claim, or any portion thereof, may be withheld from payments due the Contractor until such time as the Contractor shall furnish such additional security covering such claims as may be determined by the City of HOLLY HILL

Attachment: Exhibit D - A.G. Pifer Construction - 22-BG-06 Bid Proposal (2023-R-55 : Fire Station Construction)

H. The Contractor shall provide the following insurance on forms no more restrictive than the latest edition of those filed by the Insurance Services Office, and name the "City of HOLLY HILL" (as defined in "C" above) as an Insured to the extent of the City's interests.

II. LIABILITY INSURANCE

A. **WORKERS' COMPENSATION - STATUTORY** - in compliance with the Workers' Compensation law of the State of Florida including employers liability coverage of at least $100,000. If any operations are to be undertaken on or about navigable waters, coverage must be included for the U.S. Longshoremen and Harbor Workers Acts and Jones Act.

B. **COMMERCIAL GENERAL LIABILITY** - with minimum limits of:

$2,000,000	General Aggregate
$1,000,000	Products - Completed Operations Aggregate
$1,000,000	Personal and Advertisement Injury
$1,000,000	Each Occurrence
$ 100,000	Fire Damage

C. **BUSINESS AUTOMOBILE LIABILITY** - with minimum limits of $1,000,000 per occurrence combined single limit. This insurance shall include for bodily injury and property damages the following coverage's:

(1) Owned Automobiles

(2) Hired Automobiles

(3) Non-owned Automobiles

(4) Employee Non-ownership

NOTE! The required limits of liability for the above policies may include umbrella insurance with the umbrella policy making up the difference between the policy limits of the underlying policies and the total amount of coverage required. Such Umbrella Liability insurance shall be a "follow form" and be at least as broad as the underlying policies.

III. PROPERTY INSURANCE

When this contract includes construction of and/or additions to above-ground buildings or structures, Builder's Risk and/or Installation Floater policies must be provided as follows:

A. **BUILDER'S RISK** - "All risk" form in the amount of 100% of the completed value of such addition, building or structure to include personal property of others in the care, custody or control of the Contractor, and shall include a flat-premium endorsement.

Attachment: Exhibit D - A.G. Pifer Construction - 22-BG-06 Bid Proposal (2023-R-55 : Fire Station Construction)

(1) Maximum Deductible - $5,000 each claim

(2) Certified Copy of the policy must be provided to the City prior to the commencement of work.

(3) Waiver of Occupancy Clause or Warranty - to provide that the Builder's Risk coverage will continue to apply until final acceptance by the City of the building or addition, regardless of any prior occupancy.

(4) Flood Insurance must be provided when buildings or structures are located within an identified special flood hazard area. The Flood Insurance must protect the interest of the City and be in the amount of the total insurable value of such building or structure, or the maximum amount of flood insurance coverage available under the National Flood program, whichever is the lesser.

(5) For additions or repairs of existing buildings or structures, the "Builder's Risk Completed Form" covering the Contractor's interest in improvements, repairs, additions, or alterations to completed buildings, shall be included.

(6) Bridges, Viaducts or similar structures - the "Bridge Builders Risk Form" - "All risk" contract with the flat-premium endorsement should be utilized.

B. **INSTALLATION FLOATER** - when the contract is for the installation of machinery and/or equipment into an existing structure, but does not contemplate construction of or addition to the structure itself.

(1) "All Risk" coverage to include transit and installation.

(2) Amount of Insurance - 100% of installed replacement cost value

(3) Maximum Deductible - $5,000 each claim.

(4) Cessation of Insurance - Coverage is to continue in force until final acceptance by the City.

(5) Certified Copy of the policy must be provided to the City prior to commencement of work.

(6) Flood Insurance - must be provided when machinery or equipment are located within an identified special flood hazard area. The Flood Insurance must protect the interest of the city and be in the amount of the total insurable value of such machinery or equipment.

IV. CERTIFICATE OF INSURANCE CLAUSES

Type text here

All policies and Certificates of Insurance of the Contractor shall contain the following clauses and agreements:

Attachment: Exhibit D - A.G. Pifer Construction - 22-BG-06 Bid Proposal (2023-R-55 : Fire Station Construction)

A. Insurers shall have no right of recovery or subrogation against the City of HOLLY HILL (as defined in "C" above), it being the intention of the parties that the insurance policies so effected shall protect both parties and be primary coverage for any and all losses covered by the above described insurance.

B. The clause "other insurance" in a policy in which the City of HOLLY HILL is named as an Insured shall not apply to the City of HOLLY HILL.

C. The insurance companies issuing the policies shall have no recourse against the City of HOLLY HILL (as defined in "C" above) for payment of any premiums or for assessments under any policy for insurance.

D. The contractor's insurer shall be requested to include a breach of warranty clause to prevent nullification of insurance because the Contractor breaches a condition of the policy.

E. Any and all deductibles in the above described insurance policies shall be assumed by and be for the account of, and at the sole risk of the Contractor.

F. Any loss payable under the Property Insurance, if any, is to be adjusted with and made payable to the City of HOLLY HILL, as their interest may appear.

V. CITY INDEMNIFICATION

The following Indemnification Agreement shall be a provision of this contract and also shall be endorsed onto or attached to the insurance policy and Certificate of Insurance:

"The Contractor agrees to protect, defend and pay on behalf of, and hold the City of HOLLY HILL and its elected officials, officers, employees, volunteers, representatives, agents and affiliates free and harmless from and against all claims for personal or bodily injury or death, or property damage or destruction of tangible property including loss of use thereof, losses, penalties, damages, settlements, costs, charges, professional fees or other expenses of every kind and character in connection with and arising directly or indirectly out of this agreement and/or performance thereof, unless such claims are a result of the City of HOLLY HILL's sole negligence. This indemnification clause includes claims made by the employees and subcontractors of the Contractor against the Owner and the Contractor hereby waives its entitlement, if any, to immunity under Section 440.11, Florida Statutes. Nothing contained herein shall be construed as a waiver of any immunity from or a limitation of liability the City may have under the doctrine of sovereign immunity or Chapter 768.28, Fla. Stat. This indemnification provision shall survive the completion of the project and shall be in full force and effect beyond the completion of the project or the termination of this contract.

Attachment: Exhibit D - A.G. Pifer Construction - 22-BG-06 Bid Proposal (2023-R-55 : Fire Station Construction)

CITY OF HOLLY HILL, FLORIDA
INSURANCE REQUIREMENTS CHECKLIST
CITY OF HOLLY HILL, VOLUSIA COUNTY, FLORIDA

Items marked "X" must be provided

			Minimum Limits Required	
X	General Liability			
	X	Commercial General Liability	$ 2,000,000	General Aggregate
	X	Occurrence Form	$ 1,000,000	Product/Completed Operations Agg.
	___	_____	$ 1,000,000	Personal & Advertising Injury
	___	_____	$ 1,000,000	Each Occurrence
	___	_____	$ 100,000	Fire Damage Pump Stations
X	Automobile Liability			
	Owned, Hired & Non-Owned		$ 1,000,000	Combined Single Limit per Occurrence
X	Worker's Compensation and		Statutory	
	Employer's Liability		$ 100,000	Each Accident
			$ 500,000	Disease - Policy Limit
			$ 100,000	Disease - Each Employee
___	Professional Liability - Errors & Omissions (*To be completed by Bidder)			
	* Deductible: $_____		$_____	Aggregate *
	Claims Made (Y/N):_____		$_____	Each Claim
	*Occurrence (Y/N):			
	*Defense included in Limits (Y/N):			
X	Builder's Risk/Installation Floater (*To be completed by Bidder)			
	* Flood included $_____ Limit		$_____	100% of Completed or Installed Value, All-Risk Form
	* Transportation included $_____ Limit			
	* Storage included $_____ Limit			
	City must be a named insured. Copy of policy will be required.			
___	Other			
	_____		$	
	_____		$	

X The Certificate of Insurance must show "The City of HOLLY HILL, elected officials and employees" and the adjacent property owners as an additional insured.

X Certificates must give to the City of HOLLY HILL 30 days' prior written notice of cancellation, non-renewal, or adverse change.

X Certificates must identify bid number and bid title.

X A Wavier of Subrogation shall be provided to the City

Statement of Bidder:
We understand the requirements requested and agree to comply fully.

Bidder - Authorized Signature A complete copy of this form with original signature must accompany bid.

Attachment: Exhibit D - A.G. Pifer Construction - 22-BG-06 Bid Proposal (2023-R-55 : Fire Station Construction)

THE AMERICAN INSTITUTE OF ARCHITECTS

AIA Document A310

Bid Bond

KNOW ALL MEN BY THESE PRESENTS, THAT WE **A.G. Pifer Construction Co., Inc.**
3629 Old Deland Road, Daytona Beach, FL 32124

as Principal, hereinafter called the Principal, and **Westfield Insurance Company**
P. O. Box 5001, Westfield Center, OH 44251

a corporation duly organized under the laws of the State of **OHIO**

as Surety, hereinafter called the Surety, are held and firmly bound unto **City of Holly Hill**
1065 Ridgewood Avenue, Holly Hill, Florida 32117

as Obligee, hereinafter called the Obligee, in the sum of **-FIVE PERCENT (5%) OF PROPOSED BID-**

Dollars ($ **---5%---**),

for the payment of which sum well and truly to be made, the said Principal and the said Surety, bind ourselves, our heirs, executors, administrators, successors and assigns, jointly and severally, firmly by these presents.

WHEREAS, the Principal has submitted a bid for **Holly Hill Fire Station #96 New Building - Project No. 22-BG-06**

NOW, THEREFORE, if the Obligee shall accept the bid of the Principal and the Principal shall enter into a Contract with the Obligee in accordance with the terms of such bid, and give such bond or bonds as may be specified in the bidding or Contract Documents with good and sufficient surety for the faithful performance of such Contract and for the prompt payment of labor and materials furnished in the prosecution thereof, or in the event of the failure of the Principal to enter such Contract and give such bond or bonds, if the Principal shall pay to the Obligee the difference not to exceed the penalty hereof between the amount specified in said bid and such larger amount for which the Obligee may in good faith contract with another party to perform the Work covered by said bid, then this obligation shall be null and void, otherwise to remain in full force and effect.

Signed and sealed this **29th** day of **August**, **2023**

(Witness)

A.G. Pifer Construction Co., Inc. (Principal) (Seal)

By: (Title)

Natalie C. Demers (Witness)

Westfield Insurance Company (Surety) (Seal)

By: *Attorney-in-Fact* **Don Bramlage** (Title)

AIA DOCUMENT A310 ● BID BOND ● AIA ● FEBRUARY 1970 ED. ● THE AMERICAN INSTITUTE OF ARCHITECTS, 1735 N.Y. AVE., N.W., WASHINGTON, D.C. 20006

Attachment: Exhibit D - A.G. Pifer Construction - 22-BG-06 Bid Proposal (2023-R-55 : Fire Station Construction)

General Power of Attorney

CERTIFIED COPY

POWER NO. **0994592 00**

Westfield Insurance Co.
Westfield National Insurance Co.
Ohio Farmers Insurance Co.

Westfield Center, Ohio

Know All Men by These Presents, That WESTFIELD INSURANCE COMPANY, WESTFIELD NATIONAL INSURANCE COMPANY and OHIO FARMERS INSURANCE COMPANY, corporations, hereinafter referred to individually as a "Company" and collectively as "Companies," duly organized and existing under the laws of the State of Ohio, and having its principal office in Westfield Center, Medina County, Ohio, do by these presents make, constitute and appoint

DON BRAMLAGE, LAURA D. MOSHOLDER, EDWARD M. CLARK, JOINTLY OR SEVERALLY

of **SANFORD** and State of **FL** its true and lawful Attorney(s)-in-Fact, with full power and authority hereby conferred in its name, place and stead, to execute, acknowledge and deliver **any and all bonds, recognizances, undertakings, or other instruments or contracts of suretyship-** - - -

PROJECT:	REPLACEMENT FIRE STATION #96 CITY OF HOLLY HILL, FL 1020 Daytona Avenue, Holly Hill, FL 32117
	A/E Project No. 2204
OWNER:	CITY OF HOLLY HILL 1065 Ridgewood Avenue, Holly Hill, FL 32117
ARCHITECT:	HALL & OGLE ARCHITECTS, INC. 208 Magnolia Ave. Daytona Beach, FL 32114 386-255-6163
ENGINEERS:	NEWKIRK ENGINEERING INC. Ormond Beach, FL
	AB CONSULTING ENGINEERS Orlando, FL
	DELOSE O'NEAL ENGINEERNG Debary, FL
	G & P ENGINEERING LLC Winter Springs, FL
	JOHN M. PATTERSON Ormond Beach, FL

ADDENDUM NUMBER 1 DATED 10 AUGUST 2023

This Addendum is being issued to the project documents for this project. This addendum is part of the contract documents and modifies/ clarifies the project plans and specifications as follows:

BIDDER QUESTIONS:

ADD. 1.01 Drawing Sheet A2.3 & A3.0: Single Ply Roof Details & Building Elevations

Contractor Question 06: Please specify whether the roof flats will be TPO or Modified. The plans cite both. Please see image on next page for reference and clarification.

Attachment: Exhibit D - A.G. Pifer Construction - 22-BG-06 Bid Proposal (2023-R-55 : Fire Station Construction)

Petersen Tite Lok Plus 18" Panel w/ 2" Rib – Clips w/ Mechanical Seams - ISO w/ Modified (Base and Cap)

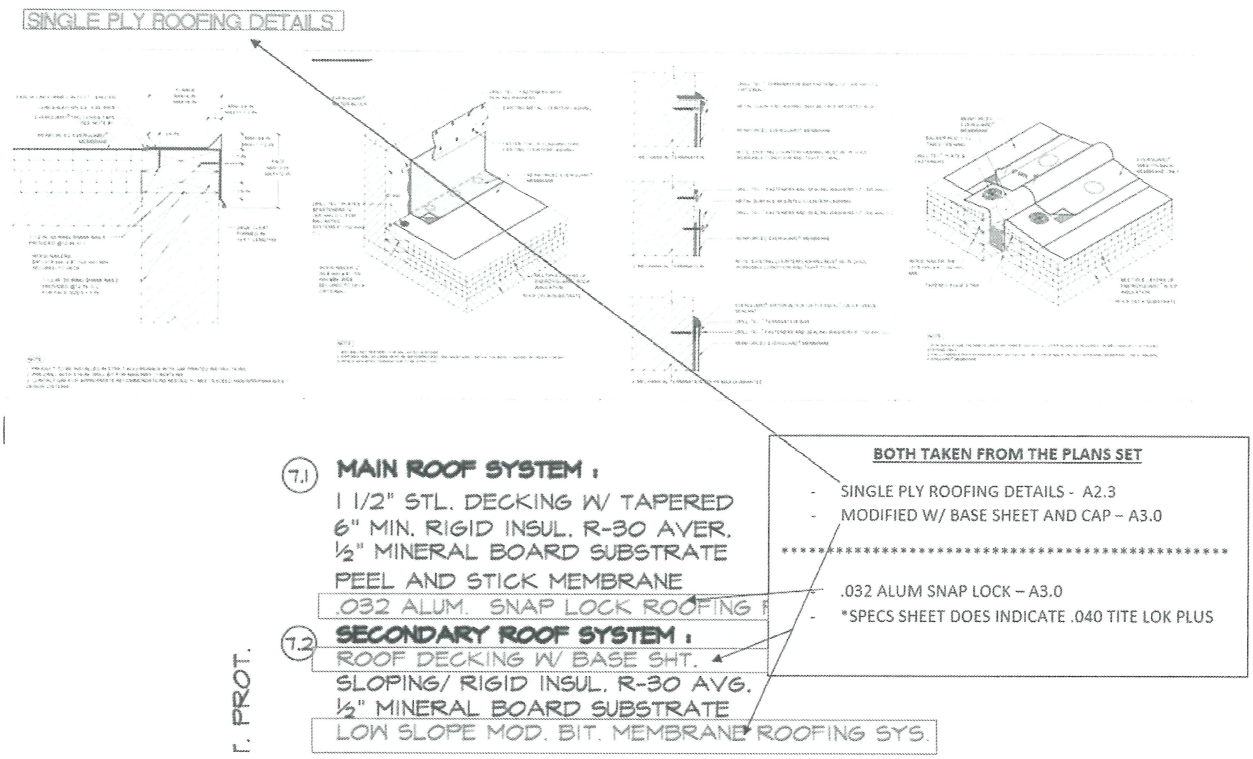

Response: The metal roofing is to be 0.040 aluminum tite-loc plus manufactured by Peterson Aluminum Corp.
Section 074100 – Revise item 7.1 in the material key to be same as spec section 074100.
The low slope single ply roofing (item 7.2) in material key) is to be 0.80 mill TPO manufactured by Carlisle Construction Materials or approved equal. Revise item 7.2 in material key per this directive.
Reference attached specification.

ADD. 1.02 Drawing Sheet A2.0 & E2.0: Floor Plans/ Dimensioned Floor Plans & Electrical Power and System Plan

At sheet A2.0, provide (2) vehicle exhaust removal units between the (2) drive through bays and attach to roof structure above reference section 2/A4.1. At furniture/ equipment schedule, add item 27 to be vehicle exhaust removal units, contractor supplied and contractor installed. Reference sheets M0.2 and M1.1 for more information.

Contractor Question 05: At sheet E2.0, vehicle exhaust removal system, note 3 calls for the Electrical Contractor to furnish and install local disconnects and limit switches. Typically this is provided by the door/ system vendor and the Electrical Contractor connects. If the Electrical Contractor is to provide, please provide details on the type of limit switch needed and the type of headed needed for the limit switch.

Response: The limit switches and local disconnects are to be provided/ installed by the overhead door equipment supplier and connected by the Electrical Contractor.

Attachment: Exhibit D - A.G. Pifer Construction - 22-BG-06 Bid Proposal (2023-R-55 : Fire Station Construction)

ADD. 1.03 Drawing Sheet E3.0: Electrical Lighting Plan

Contractor Question 01: There are no designations on the fans in bunk rooms 118, 119, 120, 121 and the covered porch. Please advise as to which kind of fan is required.

Response: The ceiling fans in bunk rooms should be small 36"-40" diameter And designated as CF3. The ceiling fan at the covered porch should be 48" diameter with CF1 designation. Provide a commercial type with an exterior rating at porch.

Contractor Question 02: At room 126 on sheet E3.0, the drawings call for type (K) in the stairwell but are drawn as being linear. (K) is a recess can. Please clarify which is needed.

Response: Revise fixture to be (P) type (add to lighting fixture schedule). It is a 4ft LED wall mounted with wall brackets with lens cover. Mount horizontal and provide at least 80" clearance to stair minimum.

Contractor Question 03: At room 127, the drawings appear to show a (C) fixture or similar in this area. Please verify fixture type.

Response: Light fixtures in rooms 127 and 130 are to be (C) type NOT (B). Mount to exposed structure with unistrut or equal.

Contractor Question 04: On sheet E3.0, service riser diagram, single line appears to show a direct feed to the FACP. We are not finding a breaker to be feeding the FACP. Please confirm.

Response: The 3/4" conduit from the generator to the FACP on the service riser containing (6) #12 plus a ground is for annunciation of generator alarms. Please use position 10 on panel P1 for 20 amp red locking breaker to feed the FACP.

ADD. 1.04 Request for Substitution

Contractor Question 07: Will it be acceptable to use Mesker or Republic for hollow metal doors?

Response: Republic is acceptable.

Contractor Question 07: Will it be acceptable to use Oshkosh for wood doors?

Response: Oshkosh is acceptable.

ADD. 1.05 Sheet A2.2 & A2.3: Metal Roof Details & Single Ply Roof Details

At the general notes, all exposed aluminum fascia gutters and down spouts to be custom color to match coiling overhead doors. Tiger Drylac architectural powder coating system Series 38 RAL 3003 (Dark Red Color).

ADD. 1.06 Sheet A6.0: Finish Schedule/ Door Schedule/ Window Types

At exterior window elevations, provide interior solar fabric shade system mounted at window head. Manual roll shade R8 with 3" fascia manufactured by SWF Contract Inc. Provide complete system colors to be selected by architect.

Attachment: Exhibit D - A.G. Pifer Construction - 22-BG-06 Bid Proposal (2023-R-55 : Fire Station Construction)

ADD. 1.07 Specification Section 08 3323: Overhead Coiling Doors

Overhead coiling doors at 2.02 – Coiling Doors – Item A-3 Finish – Factory painted powder coat color to be: Tiger Drylac architectural powder coating system RAL 3003 (Dark Red Color).

ADD. 1.08 Specification Section 07 5423: TPO Membrane Roofing

Reference Attached new specification.

END OF ADDENDUM NO. 1

Attachment: Exhibit D - A.G. Pifer Construction - 22-BG-06 Bid Proposal (2023-R-55 : Fire Station Construction)

SECTION 075423
THERMOPLASTIC POLYOLEFIN (TPO) MEMBRANE ROOFING - CARLISLE

PART 1 GENERAL

1.01 RELATED REQUIREMENTS

A. Section 076200 - Sheet Metal Flashing and Trim: Counterflashings, Drip Edge.

1.02 REFERENCE STANDARDS

A. ASCE 7 - Minimum Design Loads for Buildings and Other Structures 2010, with 2013 Supplements and Errata.

B. ASTM C1289 - Standard Specification for Faced Rigid Cellular Polyisocyanurate Thermal Insulation Board 2014.

C. ASTM D41/D41M - Standard Specification for Asphalt Primer Used in Roofing, Dampproofing, and Waterproofing 2011 (Reapproved 2016).

D. ASTM D312/D312M - Standard Specification for Asphalt Used in Roofing 2016a.

E. ASTM D6878/D6878M - Standard Specification for Thermoplastic Polyolefin Based Sheet Roofing 2017.

F. NRCA (RM) - The NRCA Roofing Manual 2018.

G. NRCA ML104 - The NRCA Roofing and Waterproofing Manual Fifth Edition, with interim updates.

1.03 ADMINISTRATIVE REQUIREMENTS

A. Preinstallation Meeting: Convene one week before starting work of this section.
   1. Review preparation and installation procedures and coordinating and scheduling required with related work.

1.04 SUBMITTALS

A. See Section 013000 - Administrative Requirements, for submittal procedures.

B. Product Data: Provide manufacturer's written information listed below.
   1. Product data indicating membrane materials, flashing materials, insulation, vapor retarder, surfacing, and fasteners.
   2. Preparation instructions and recommendations.

C. Manufacturer's Qualification Statement.

D. Installer's Qualification Statement.

E. Specimen Warranty: For approval.

F. Manufacturer's Installation Instructions: Indicate membrane seaming precautions and perimeter conditions requiring special attention.

G. Manufacturer's Certificate: Certify that products meet or exceed specified requirements.

H. Warranty:
   1. Submit manufacturer warranty and ensure that forms have been completed in City of Holly Hill's name and registered with manufacturer.
   2. Submit installer's certification that installation complies with all warranty conditions for the waterproof membrane.

1.05 QUALITY ASSURANCE

A. Perform work in accordance with NRCA Roofing and Waterproofing Manual.

B. Manufacturer Qualifications: Company specializing in manufacturing the products specified in this section with minimum twenty (20) years of documented experience.

C. Installer Qualifications: Company specializing in performing the work of this section:
   1. With minimum five (5) years documented experience.

Attachment: Exhibit D - A.G. Pifer Construction - 22-BG-06 Bid Proposal (2023-R-55 : Fire Station Construction)

2. Approved by membrane manufacturer.

1.06 DELIVERY, STORAGE, AND HANDLING

A. Deliver products in manufacturer's original containers, dry, undamaged, with seals and labels intact.

B. Store products in weather protected environment, clear of ground and moisture.

C. Protect foam insulation from direct exposure to sunlight.

D. Keep Material Safety Data Sheets (MSDS) at the project site at all times during transportation, storage, and installation of materials.

E. Comply with all requirements of City of Holly Hill to prevent overloading or disturbance of the structure when loading materials onto the roof.

1.07 FIELD CONDITIONS

A. Do not apply roofing membrane during unsuitable weather. Refer to manufacturer's written instructions.

B. Do not apply roofing membrane when ambient temperature is below 40 degrees F or above 100 degrees F.

C. Do not apply roofing membrane to damp or frozen deck surface or when precipitation is expected or occurring.

D. Do not expose materials vulnerable to water or sun damage in quantities greater than can be weatherproofed the same day.

E. Proceed with work so new roofing materials are not subject to construction traffic as work progresses.

F. Do not allow grease, oil, fats, or other contaminants to come into direct contact with membrane.

1.08 WARRANTY

A. See Section 017800 - Closeout Submittals, for additional warranty requirements.

B. Material Warranty: Provide membrane manufacturer's warranty agreeing to replace material that shows manufacturing defects within 10 years after installation.

PART 2 PRODUCTS

2.01 MANUFACTURERS

A. Carlisle SynTec: www.carlisle-syntec.com/#sle.

B. Firestone Building Products LLC: www.firestonebpco.com

C. GAF Everguard

D. Substitutions: See Section 016000 - Product Requirements.

2.02 ROOFING APPLICATIONS

A. TPO Membrane Roofing to be used at concrete entry canopy: One ply membrane, fully adhered.

B. Roofing Assembly Performance Requirements and Design Criteria:
   1. Wind Uplift:
      a. Designed to withstand wind uplift forces calculated with ASCE 7.
      b. Design Wind Speed: 155 miles per hour, see structural drawings.
   2. Drainage: No standing water within 48 hours after precipitation.

2.03 ROOFING MEMBRANE AND ASSOCIATED MATERIALS

A. Membrane:
   1. Material: Thermoplastic Polyolefin (TPO) complying with ASTM D6878/D6878M.
   2. Reinforcing: Internal fabric.
   3. Thickness: 80 mils (0.080 inch), minimum.
   4. Sheet Width: Factory fabricated into largest sheets possible.

Attachment: Exhibit D - A.G. Pifer Construction - 22-BG-06 Bid Proposal (2023-R-55 : Fire Station Construction)

5. Color: White.
6. Product:
   a. Carlisle Sure-Weld.

B. Seaming Materials: As recommended by membrane manufacturer.

C. Flexible Flashing Material: Same material as membrane.

D. Base Flashing: Provide waterproof, fully adhered base flashing system at all penetrations, plane transitions, and terminations.

2.04 INSULATION

A. Polyisocyanurate Board Insulation to be used to form cricket at flat area of canopy to allow proper drainage: ASTM C1289, Type II, Class 1, fiber reinforced felt both faces; Grade 2 and with the following characteristics:
1. Compressive Strength: 20 pounds per square inch.
2. Tapered Board: Slope as indicated; minimum thickness 1 inch; fabricate of fewest layers possible.
3. Product:
   a. Carlisle HP-H.

2.05 ACCESSORIES

A. Prefabricated Flashing Accessories:
1. Corners and Seams: Same material as membrane, in manufacturer's standard thicknesses.
2. Penetrations: Same material as membrane, with manufacturer's standard cut-outs, rigid inserts, clamping rings, and flanges.
3. Sealant Pockets: Same material as membrane, with manufacturer's standard accessories, in manufacturer's standard configuration.
4. Pressure Sensitive Cover Strips: 6 inch wide, 45 mils (0.045 inch) thick, non-reinforced TPO membrane laminated to 35 mils (0.035 inch) thick cured synthetic rubber with pressure sensitive adhesive.
5. TPO Pressure Sensitive RUSS:
6. Miscellaneous Flashing: Non-reinforced TPO membrane; 80 mils (0.080 inch) thick, in manufacturer's standard lengths and widths.

B. Membrane Adhesive: As recommended by membrane manufacturer.

C. Surface Conditioner for Adhesives: Compatible with membrane and adhesives.

D. Sealants: As recommended by membrane manufacturer.

E. Cleaner: Manufacturer's standard, clear, solvent-based cleaner.

F. Edgings and Terminations: Manufacturer's standard edge and termination accessories.
1. Snap-On Edge System:
2. Anchor Bar Fascia System:
3. Drip Edge: Carlisle Sure-Seal Drip Edge.
4. Coping:
5. TPO Coated Sheet Metal.
6. Termination Bar.

PART 3 EXECUTION

3.01 INSTALLATION - GENERAL

A. Perform work in accordance with manufacturer's instructions.

B. Do not apply roofing membrane during unsuitable weather.

C. Do not apply roofing membrane when ambient temperature is outside the temperature range recommended by manufacturer.

D. Do not apply roofing membrane to damp or frozen deck surface or when precipitation is expected or occurring.

Attachment: Exhibit D - A.G. Pifer Construction - 22-BG-06 Bid Proposal (2023-R-55 : Fire Station Construction)

E. Do not expose materials vulnerable to water or sun damage in quantities greater than can be weatherproofed the same day.

3.02 EXAMINATION

A. Verify that surfaces and site conditions are ready to receive work.

B. Verify deck is supported and secure.

C. Verify deck is clean and smooth, flat, free of depressions, waves, or projections, properly sloped and suitable for installation of roof system.

3.03 PREPARATION, GENERAL

A. Clean substrate thoroughly prior to roof application.

3.04 WOOD DECK PREPARATION

A. Verify flatness and tightness of joints of wood decking. Verify that all wood decking edges are fully supported. Fill knot holes with latex filler or completely cover with securely nailed sheet metal.

3.05 INSTALLATION - GENERAL

A. Perform work in accordance with manufacturer's instructions and NRCA (RM) applicable requirements.

B. Do not apply roofing membrane during unsuitable weather.

C. Do not apply roofing membrane when ambient temperature is outside the temperature range recommended by manufacturer.

D. Do not apply roofing membrane to damp or frozen deck surface or when precipitation is expected or occurring.

E. Do not expose materials vulnerable to water or sun damage in quantities greater than can be weatherproofed the same day.

3.06 MEMBRANE APPLICATION

A. Roll out membrane, free from wrinkles or tears. Place sheet into place without stretching.

B. Shingle joints on sloped substrate in direction of drainage.

C. Fully Adhered Application: Apply adhesive at manufacturer's recommended rate. Fully embed membrane in adhesive except in areas directly over or within 3 inches of expansion joints. Fully adhere one roll before proceeding to adjacent rolls.

D. Seam Welding:
   1. Seam Welding: Overlap edges and ends and seal seams by heat welding, minimum 2 inches.
   2. Cover all seams with manufacturer's recommended joint covers.
   3. Probe all seams once welds have thoroughly cooled. (Approximately 30 minutes.)
   4. Repair all deficient seams within the same day.
   5. Seal cut edges of reinforced membrane after seam probe is complete.

E. At intersections with vertical surfaces:
   1. Extend membrane over cant strips and up a minimum of 4 inches onto vertical surfaces.
   2. Fully adhere flexible flashing over membrane and up to nailing strips.

F. Coordinate installation of roof drains and sumps and related flashings. Locate all field splices away from low areas and roof drains. Lap upslope sheet over downslope sheet.

G. Daily Seal: Install daily seal per manufacturers instructions at the end of each work day. Prevent infiltration of water at incomplete flashings, terminations, and at unfinished membrane edges.

3.07 FIELD QUALITY CONTROL

A. See Section 014000 - Quality Requirements, for general requirements for field quality control and inspection.

Attachment: Exhibit D - A.G. Pifer Construction - 22-BG-06 Bid Proposal (2023-R-55 : Fire Station Construction)

B. Require site attendance of roofing and insulation material manufacturers daily during installation of the Work.

3.08 CLEANING

A. See Section 017419 - Construction Waste Management and Disposal, for additional requirements.

B. Remove bituminous markings from finished surfaces.

C. In areas where finished surfaces are soiled by work of this section, consult manufacturer of surfaces for cleaning advice and conform to their documented instructions.

D. Repair or replace defaced or damaged finishes caused by work of this section.

3.09 PROTECTION

A. Protect installed roofing and flashings from construction operations.

B. Where traffic must continue over finished roof membrane, protect surfaces using durable materials.

END OF SECTION

Attachment: Exhibit D - A.G. Pifer Construction - 22-BG-06 Bid Proposal (2023-R-55 : Fire Station Construction)

PROJECT:	REPLACEMENT FIRE STATION #96 CITY OF HOLLY HILL, FL 1020 Daytona Avenue, Holly Hill, FL 32117
	A/E Project No. 2204
OWNER:	CITY OF HOLLY HILL 1065 Ridgewood Avenue, Holly Hill, FL 32117
ARCHITECT:	HALL & OGLE ARCHITECTS, INC. 208 Magnolia Ave. Daytona Beach, FL 32114 386-255-6163
ENGINEERS:	NEWKIRK ENGINEERING INC. Ormond Beach, FL
	AB CONSULTING ENGINEERS Orlando, FL
	DELOSE O'NEAL ENGINEERNG Debary, FL
	G & P ENGINEERING LLC Winter Springs, FL
	JOHN M. PATTERSON Ormond Beach, FL

ADDENDUM NUMBER 2 DATED 15 AUGUST 2023

This Addendum is being issued to the project documents for this project. This addendum is part of the contract documents and modifies/ clarifies the project plans and specifications as follows:

BIDDER QUESTIONS:
Sabougi Construction

ADD. 2.01 Specification Section 07 2100: Thermal Insulation

Contractor Question 01: Spec. section 07 2100 building insulation states 2½" thick polyiso board. Architectural plans call for 1½"" thick.

Response: Provide 1½" thick rigid wall insulation per partition types schedule on sheet A2.0. Revise board thickness in spec. section 07 2100 at 2.01 polyiso wall insulation item A-1 to be 1½" thickness.

Contractor Question 02: Please provide on plans where the spray-on insulation at an average thickness of 5" is located. (Per spec section 07 2100 2.03)

Attachment: Exhibit D - A.G. Pifer Construction - 22-BG-06 Bid Proposal (2023-R-55 : Fire Station Construction)

Response: There is no cellulose spray foam insulation for this project. There is a minor area of spray foam at exterior walls at edges of doors, windows, pipes, and edge of roof deck to seal air/ vapor tight.
Revise spec. section 07 2100 2.03 to be as follows:

ADD. 2.02 Specification Section 08 7100: Door Hardware

Contractor Question 05: Spec. section 08 7100 2.11 key control system calls for Telkee Management System. Telkee has gone out of business.

Response: Provide cabinet by Lundkey Manufacturer.

ADD. 2.03 Specification Section 09 2400: Portland Cement Plastering

Contractor Question 06: May spec. section 09 2400 include "STO" as approved supplier?

Response: "STO" is not acceptable.

ADD. 2.04 Specification Section 09 6813: Tile Carpeting

Contractor Question 09: Please confirm spec. section 09 6813 Tile Carpeting is not applicable on this project. There is none shown on the room finish schedule.

Response: Correct. No carpet tile for this project.

ADD. 2.05 Specifications:

Contractor Question 03: Provide spec. sections for the flat roof and the toilet accessories.

Response:
Reference Addendum #01 with attached TPO Specification.
Reference attached spec section 10 2800 fo Toilet, Bath, and Laundry Accessories.

Contractor Question 08: Need spec. section on the floor epoxy paint and specialty epoxy coatings.

Response: Specialty epoxy coating is in the painting spec. section 09 9000 page 3, item 2.03 Paint System – Item F – IPS – 6 (For use in apparatus bays). The other epoxy floor paint is item E – IPS – 5 concrete floors.
Note: Fluid applied flooring, item 5 in room finish schedule is found in spec. section 09 6750.

END OF ADDENDUM NO. 2

Attachment: Exhibit D - A.G. Pifer Construction - 22-BG-06 Bid Proposal (2023-R-55 : Fire Station Construction)

SECTION 102800
TOILET, BATH, AND LAUNDRY ACCESSORIES

PART 1 GENERAL

1.01 SECTION INCLUDES

A. Accessories for toilet rooms and utility rooms.

B. Grab bars.

1.02 RELATED SECTIONS

A. Section 061000 - Rough Carpentry: Concealed supports for accessories, including in wall framing and plates.

1.03 REFERENCES

A. ASTM A 123/A 123M - Standard Specification for Zinc (Hot-Dip Galvanized) Coatings on Iron and Steel Products; 2002.

B. ASTM A 269 - Standard Specification for Seamless and Welded Austenitic Stainless Steel Tubing for General Service; 2004.

C. ASTM A 666 - Standard Specification for Annealed or Cold-Worked Austenitic Stainless Steel Sheet, Strip, Plate, and Flat Bar; 2003.

D. ASTM C 1036 - Standard Specification for Flat Glass; 2001.

E. GSA CID A-A-3002 - Mirrors, Glass; U.S. General Services Administration; 1996.

1.04 SUBMITTALS

A. See Section 01 3000 - Submittals, for submittal procedures.

B. Product Data: Provide data on accessories describing size, finish, details of function, attachment methods.

C. Manufacturer's Installation Instructions: Indicate special procedures and conditions requiring special attention.

1.05 COORDINATION

A. Coordinate the work with the placement of internal wall reinforcement and reinforcement of toilet partitions to receive anchor attachments.

PART 2 PRODUCTS

2.01 MANUFACTURERS

A. Products listed are made by Bobrick, unless noted otherwise.

B. Other Acceptable Manufacturers, subject to compliance with the Contract Documents:
   1. American Specialties, Inc: www.americanspecialties.com.
   2. Bradley Corporation: www.bradleycorp.com.
   3. Substitutions: Section 01 6000 - Product Requirements.

C. All items of each type to be made by the same manufacturer.

2.02 MATERIALS

A. Accessories - General: Shop assembled, free of dents and scratches and packaged complete with anchors and fittings, steel anchor plates, adapters, and anchor components for installation.
   1. Grind welded joints smooth.
   2. Fabricate units made of metal sheet of seamless sheets, with flat surfaces.

B. Keys: Provide 20 keys for each accessory to City of Holly Hill ; master key all lockable accessories.

C. Stainless Steel Sheet: ASTM A 666, Type 304.

D. Stainless Steel Tubing: ASTM A 269, Type 304 or 316.

Attachment: Exhibit D - A.G. Pifer Construction - 22-BG-06 Bid Proposal (2023-R-55 : Fire Station Construction)

E. Mirror Glass: Float glass, ASTM C 1036 Type I, Class 1, Quality Q2, with silvering, copper coating, and suitable protective organic coating to copper backing in accordance with GSA CID A-A-3002.

F. Fasteners, Screws, and Bolts: Hot dip galvanized, tamper-proof , security type.

G. Expansion Shields: Fiber, lead, or rubber as recommended by accessory manufacturer for component and substrate.

2.03 FINISHES

A. Stainless Steel: No. 4 satin brushed finish, unless otherwise noted.

B. Galvanizing for Items Other than Sheet: Comply with ASTM A 123/A 123M; galvanize ferrous metal and fastening devices.

2.04 TOILET ROOM ACCESSORIES

A. See drawing A7.0 for drawings & schedule showing locations and quantities of toilet accessories.

PART 3 EXECUTION

3.01 EXAMINATION

A. Verify existing conditions before starting work.

B. Verify exact location of accessories for installation.

C. Verify that field measurements are as indicated on drawings.

D. See Section 061000 - Rough Carpentry for installation of blocking in walls.

3.02 PREPARATION

A. When applicable, deliver inserts and rough-in frames to site for timely installation.

B. Provide templates and rough-in measurements as required.

3.03 INSTALLATION

A. Install accessories in accordance with manufacturers' instructions.

B. Install plumb and level, securely and rigidly anchored to substrate.

C. Mounting Heights and Locations: As required by accessibility regulations and as indicated on drawings.

END OF SECTION

Attachment: Exhibit D - A.G. Pifer Construction - 22-BG-06 Bid Proposal (2023-R-55 : Fire Station Construction)

PROJECT:	REPLACEMENT FIRE STATION #96 CITY OF HOLLY HILL, FL 1020 Daytona Avenue, Holly Hill, FL 32117
	A/E Project No. 2204
OWNER:	CITY OF HOLLY HILL 1065 Ridgewood Avenue, Holly Hill, FL 32117
ARCHITECT:	HALL & OGLE ARCHITECTS, INC. 208 Magnolia Ave. Daytona Beach, FL 32114 386-255-6163
ENGINEERS:	NEWKIRK ENGINEERING INC. Ormond Beach, FL
	AB CONSULTING ENGINEERS Orlando, FL
	DELOSE O'NEAL ENGINEERNG Debary, FL
	G & P ENGINEERING LLC Winter Springs, FL
	JOHN M. PATTERSON Ormond Beach, FL

ADDENDUM NUMBER 3 DATED 16 AUGUST 2023

This Addendum is being issued to the project documents for this project. This addendum is part of the contract documents and modifies/ clarifies the project plans and specifications as follows:

BIDDER QUESTIONS:
Saboungi Construction

ADD. 3.01 Drawing Sheet C-4: Demolition and SWPPP Plan

Contractor Question: Provide detail of the concrete washout area. Civil plan sheet 4 refers to detail on sheet 5, but there is none.

Response: Provide concrete washout area as detailed on attached sketch SK-2.

ADD. 3.02 Drawing Sheet C-6: Site Layout Plan

Contractor Question: Civil plan sheet 6 indicated the location of the Type F curb. Some pavement edges do not show any curb, yet general note 9 states "All pavement edge shall have type "D" curbing unless otherwise noted on the plans." Please clarify location of the "D" curb, if any.

Attachment: Exhibit D - A.G. Pifer Construction - 22-BG-06 Bid Proposal (2023-R-55 : Fire Station Construction)

Response: At general notes, Note 9, change all curbs to be Type "F" curbing. At site layout plan, change all new curbing to be Type "F". Reference attached revised Civil sheet 6.

ADD. 3.03 Civil Engineering:

Contractor Question: Who will perform the 3 water line taps and the sewer line tap? City or Contractor? Is there a related cost to be included in our bid and if so, how much?

Response: The contractor will need to perform the water line and sewer line taps with city staff oversight. The cost of this work will need to be determined by the contractor.

Contractor Question: Assuming the city will install the water meters is there a related cost to be included in our bid, and if so, how much?

Response: The city will install the affiliated water meters. There will be no cost to the contractor for this work.

ADD. 3.03 Specification Section 09 2400: Cement Plaster

Contractor Question: We need specification section for the air and waterproofing of the CMU.

Response: See specification section 19 2400, Cement Plaster, section 2.02, Materials, for air/ water resistive barrier components.

ADD. 3.04 Specification Section 09 6566: Resilient Athletic Flooring

Contractor Question: The specified modular floor system Protect-O-Pad P80 – Heavy Duty 4'x4'x1/2" is no longer manufactured. Please provide an alternate product.

Response: Provide Altro Ollero, 12mmx37"x37" interlocking tiles or approved equal. Color for field and trim to be selected from manufacturer standard colors by architect during submittal stage. Provide fixed edge that abuts Apparatus Bay area.

ADD. 3.05 Specification

Contractor Question: We need spec section for the flat roof.

Response: Reference Addendum #01 with attached TPO Specification.

ADD. 3.06 Bidding Questions:

Contractor Question: Would you please consider moving the bid deadline time to 2PM? This allots sufficient time for bidders to tabulate all subcontract bids and submit their entire package to the City. Other municipalities apply the 2PM timeline for this reason.

Response: In order to avoid confusion among all bidders, the deadline time for this project will remain at 10:00am on Tuesday, August 29.

Contractor Question: Can we submit the Cost Breakdown the next day?

Response: The cost breakdown for this project will be due at the time of the bid opening.

Attachment: Exhibit D - A.G. Pifer Construction - 22-BG-06 Bid Proposal (2023-R-55 : Fire Station Construction)

ADD. 3.07 Specification Section 31 3116: Termite Control

At section 2.01, Materials, add Control Solutions Inc. – product Cyper TC Insecticide as an approved product.

ADD. 3.08 Drawing Sheet E2.0: Power/ Systems Floor Plan

At mezzanine storage 130 delete connection of AHU-3 (deleted from project). At Laundry and EMS/ Biohazard add connections to new mini splits AC-2 and AC-3. Reference attached sketch SK-1.

END OF ADDENDUM NO. 3

Attachment: Exhibit D - A.G. Pifer Construction - 22-BG-06 Bid Proposal (2023-R-55 : Fire Station Construction)

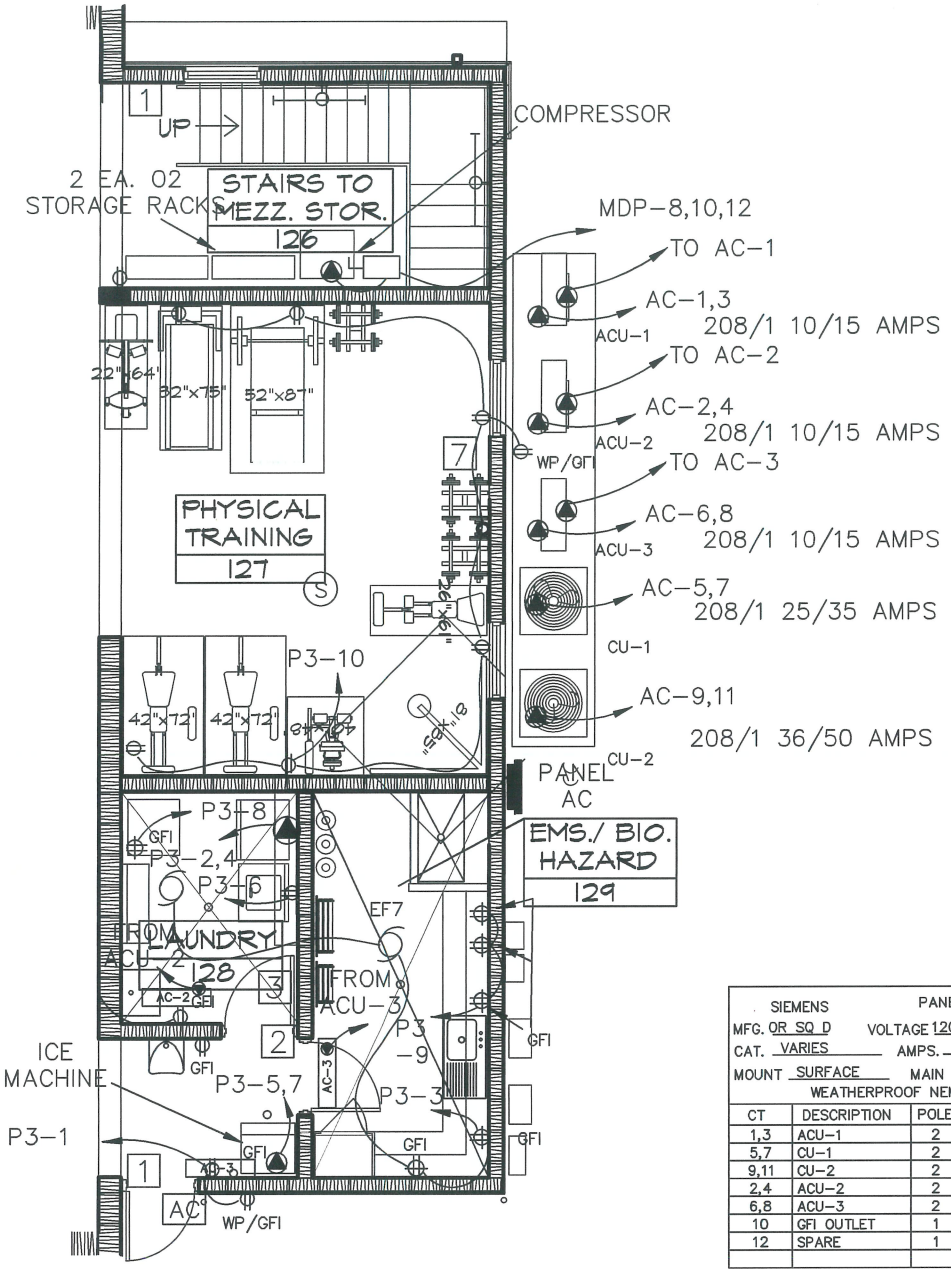

SIEMENS — PANEL: AC
MFG. OR SQ D — VOLTAGE 120/208 — PHASE 3 — WIRE 4
CAT. VARIES — AMPS. 150 — SYM. A.I.C. (I.E.R.) 22,000
MOUNT SURFACE — MAIN M.L.O. — GRD. BUS X
WEATHERPROOF NEMA 3R – 18 POLES

CT	DESCRIPTION	POLE	AMPS	WIRE	COND	ØA	ØB	ØC
1,3	ACU-1	2	15	#12	1/2"			
5,7	CU-1	2	35	#8	3/4"			
9,11	CU-2	2	50	#8	3/4"			
2,4	ACU-2	2	15	#12	1/2"			
6,8	ACU-3	2	15	#12	1/2"			
10	GFI OUTLET	1	20	#12	1/2"			
12	SPARE	1	20	–	–			

POWER/SYSTEMS FLOOR PLAN

DELETE REFERENCE TO AHU-3 IN MEZZANINE STORAGE ABOVE. THIS UNIT HAS BEEN DELETED FROM PROJECT.

SCALE: 1/8" = 1'-0"

N

NO.	REVISIONS	DATE
1	ADDENDUM 3	16-AUG.-2023

DAVID D. OGLE AR93986
JOHN E. HALL AR. 0010727

REFERENCE SHEET E2.0

SK-1 SHEET

REPLACEMENT FIRE STATION #96
CITY OF HOLLY HILL
1020 DAYTONA AVE. HOLLY HILL, FL

HALL & OGLE
ARCHITECTS, INC.
AA-C000925
208 MAGNOLIA AVENUE
DAYTONA BEACH, FLORIDA 32114
PH (386) 255-6163
FAX (386)257-5650

COMMISSION NO. 2204
PROJECT ARCH: JEH
DRAWN: SC/JEH
DATE: 16-AUG.-2023

Attachment: Exhibit D - A.G. Pifer Construction - 22-BG-06 Bid Proposal (2023-R-55 : Fire Station Construction)

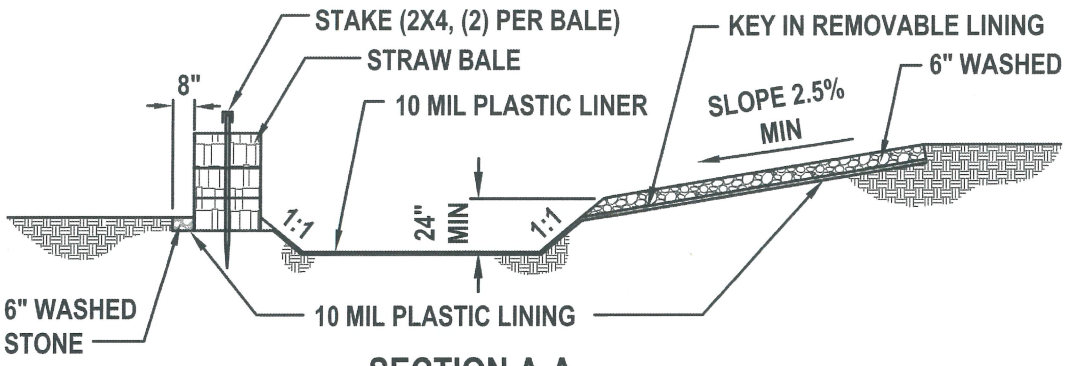

SECTION A-A

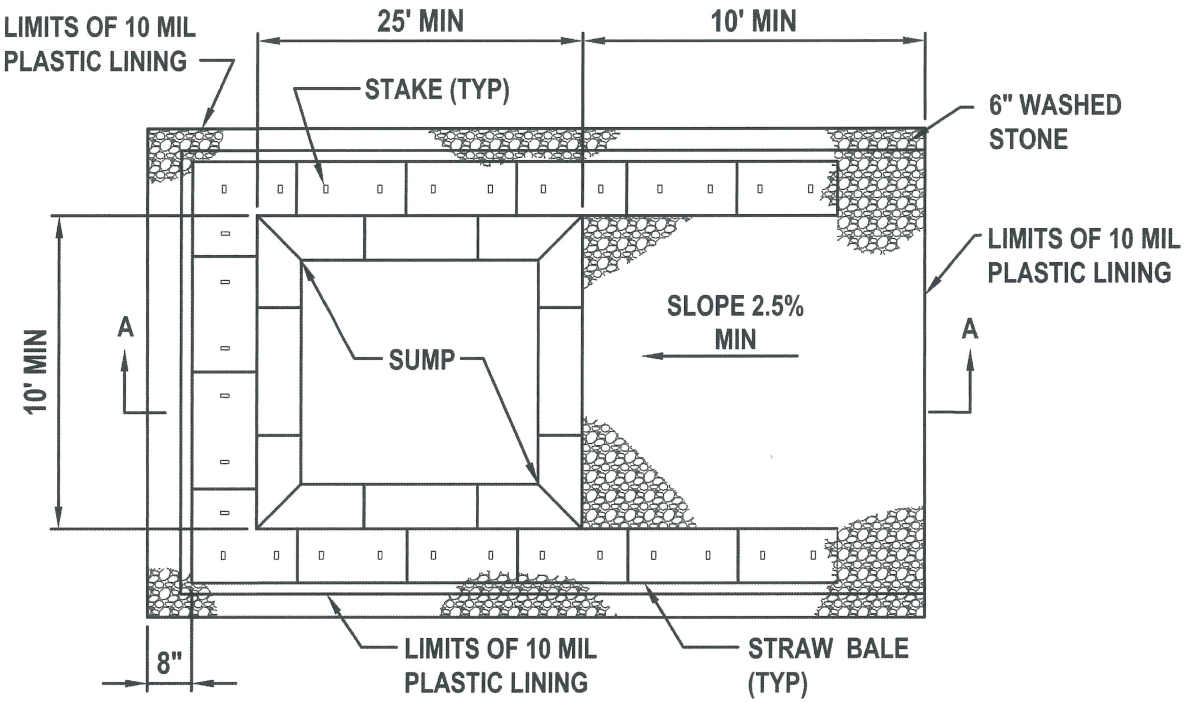

PLAN

CONCRETE WASHOUT AREA

NOT TO SCALE

NO.	REVISIONS	DATE
1	ADDENDUM 3	16-AUG.-2023

DAVID D. OGLE AR93986
JOHN E. HALL AR. 0010727

REFERENCE SHEET C5

SK-2 SHEET

REPLACEMENT FIRE STATION #96
CITY OF HOLLY HILL
1020 DAYTONA AVE. HOLLY HILL, FL

HALL & OGLE
ARCHITECTS, INC.
AA-C000925
208 MAGNOLIA AVENUE
DAYTONA BEACH, FLORIDA 32114
PH (386) 255-6163
FAX (386)257-5650

COMMISSION NO. 2204
PROJECT ARCH: JEH
DRAWN: SC/JEH
DATE:16-AUG.-2023

Attachment: Exhibit D - A.G. Pifer Construction - 22-BG-06 Bid Proposal (2023-R-55 : Fire Station Construction)

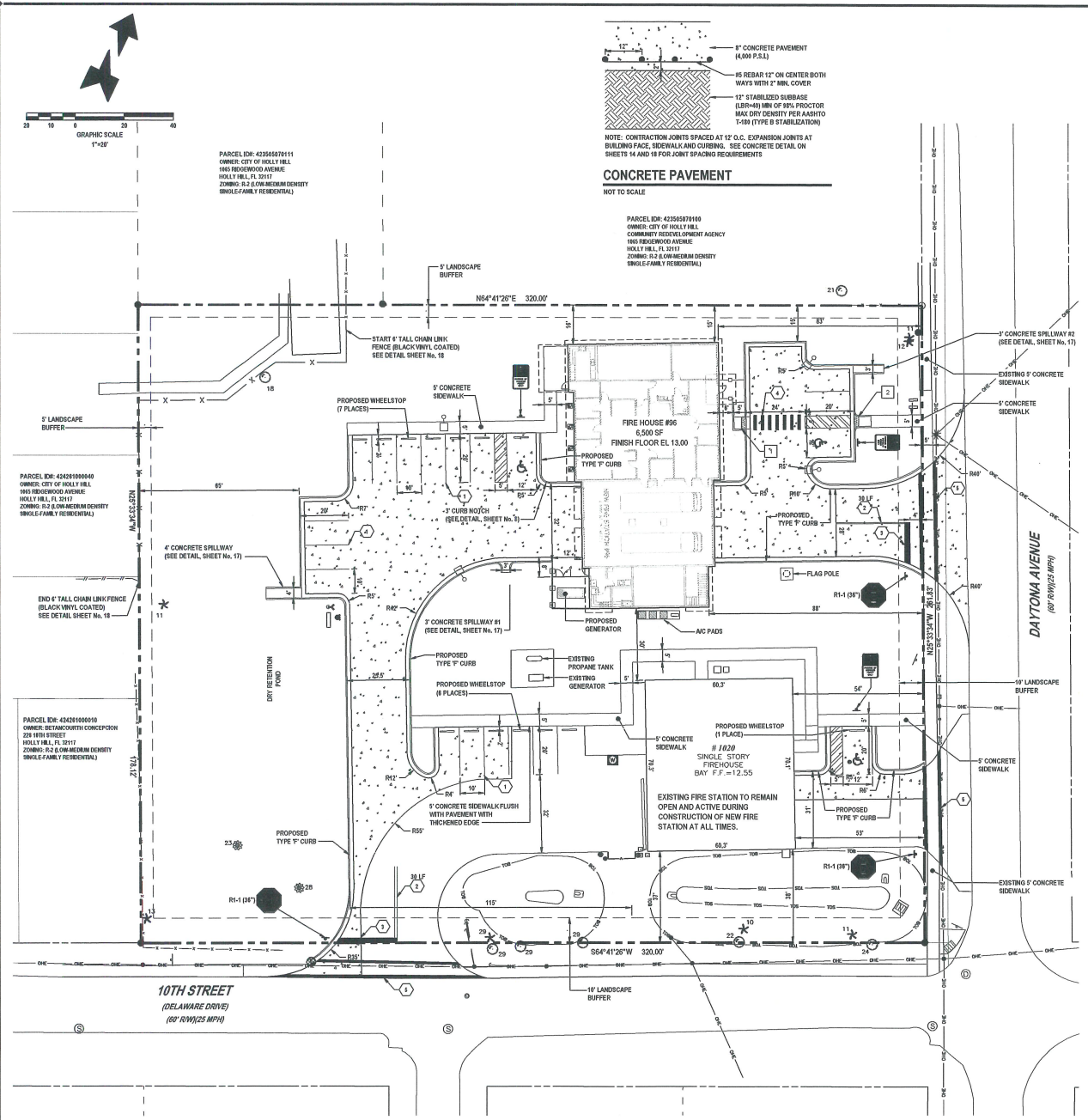

12" — 8" CONCRETE PAVEMENT (4,000 P.S.I.)
#5 REBAR 12" ON CENTER BOTH WAYS WITH 2" MIN. COVER
12" STABILIZED SUBBASE (LBR=40) MIN OF 98% PROCTOR MAX DRY DENSITY PER AASHTO T-180 (TYPE B STABILIZATION)

NOTE: CONTRACTION JOINTS SPACED AT 12' O.C. EXPANSION JOINTS AT BUILDING FACE, SIDEWALK AND CURBING. SEE CONCRETE DETAIL ON SHEETS 14 AND 18 FOR JOINT SPACING REQUIREMENTS

CONCRETE PAVEMENT

NOT TO SCALE

GENERAL NOTES:

1. CITY OF HOLLY HILL BUILDING PERMITS ARE REQUIRED FOR BUILDING, CANOPIES, DUMPSTER ENCLOSURE, LIGHT POLES, FENCE AND SIGNS. CONTRACTOR SHALL BE RESPONSIBLE FOR SUBMITTING APPROPRIATE INFORMATION (ENGINEERING, SPECIFICATIONS, ETC.) AT TIME OF BUILDING PERMIT.
2. ALL CONSTRUCTION IN THE FDOT ROW SHALL CONFIRM TO THE LATEST EDITIONS OF THE FDOT DESIGN STANDARDS (INDEXES), THE FDOT STANDARD SPECIFICATIONS FOR ROAD AND BRIDGE CONSTRUCTION AND THE FDOT UTILITY ACCOMMODATION MANUAL.
3. ALL DIMENSIONS AND TIES ARE TO THE EDGE OF PAVEMENT AND OUTSIDE FACE OF BUILDING.
4. ALL IMPROVEMENTS SHALL BE STAKED FOR CONSTRUCTION BY MEANS OF DIGITAL COORDINATES BY SURVEYOR UTILIZING GEODETIC TOTAL STATION OR GPS, SCALING OF DRAWINGS FOR PURPOSES OF STAKING ARE AT THE SURVEYOR'S RISK.
5. THE CONTRACTOR SHALL COORDINATE WITH THE EXISTING ADJACENT BUSINESSES TO ENSURE THERE IS NO DISRUPTION TO THEIR RESPECTIVE OPERATIONS.
6. THE CONTRACTOR AT ITS OWN DISCRETION SHALL MAINTAIN THE CONSTRUCTION SITE SECURE FROM TRESPASS.
7. SOD ALL DISTURBED AREAS IN RIGHT-OF-WAY WITH BAHIA SOD.
8. ALL CURB RAMPS SHALL COMPLY WITH SECTION 406 OF FLORIDA ACCESSIBILITY CODE FOR BUILDING CONSTRUCTION (FACBC).
9. ALL PAVEMENT EDGE SHALL HAVE TYPE "F" CURBING UNLESS OTHERWISE NOTED ON THESE PLANS.
10. ALL WALL-MOUNTED EQUIPMENT SUCH AS ELECTRICAL METERS, IRRIGATION METERS, PHONE/CABLE BOXES, EXTERNAL VENTS AND LOUVERS, ETC., SHALL BE PAINTED TO MATCH THE WALL ON WHICH IT IS MOUNTED OR OTHERWISE CONSISTENT WITH THE COLOR(S) OF THE BUILDING.
11. ALL MATERIALS, MACHINERY AND VEHICLES SHALL BE STORED ON-SITE IN AN ORDERLY ORGANIZED FASHION.
12. COMMERCIAL IMPACT FEE SHALL BE CALCULATED, DUE AND PAYABLE WITHIN 30 DAYS OF INITIATION OF PERMANENT ELECTRIC SERVICE.
13. CONTRACTOR TO PROVIDE PREMISE IDENTIFICATION FOR BUILDING DURING CONSTRUCTION.
14. ALL CONSTRUCTION IN THE FDOT ROW SHALL CONFORM TO THE LATEST EDITIONS OF THE FDOT DESIGN STANDARDS (INDEXES), THE FDOT STANDARD SPECIFICATIONS FOR ROAD AND BRIDGE CONSTRUCTION, AND THE FDOT UTILITY ACCOMMODATION MANUAL.
15. EXISTING FIRE STATION TO REMAIN ACTIVE DURING NEW CONSTRUCTION. COORDINATE WITH FIRE CHIEF TO MINIMIZE CONFLICTS.

PAVEMENT MARKING NOTES:

1. ALL SIGNS SHALL BE PLACED IN ACCORDANCE WITH FDOT INDEX NO. 700-101 AND THE "MANUAL ON UNIFORM TRAFFIC CONTROL DEVICES FOR STREETS AND HIGHWAYS" (LATEST EDITION).
2. PAINTED PAVEMENT MARKINGS SHALL BE APPLIED AFTER PAVEMENT SURFACE HAS CURED. SURFACE SHALL BE FREE OF FINE SAND AND DEBRIS PRIOR TO APPLICATIONS.
3. APPLY PAINTED PAVEMENT MARKINGS AT LAST STAGE OF CONSTRUCTION AFTER LANDSCAPE PLANTINGS ARE INSTALLED.
4. PAINT SHALL BE SHERWIN WILLIAMS LOW-VOC ACRYLIC PRO PARK PAINT. APPLY PER MANUFACTURER'S RECOMMENDATIONS, REFER TO DRAWINGS FOR LOCATIONS OF SPECIFIC COLORS.
5. ALL STOP BARS SHALL BE THERMOPLASTIC.
6. ALL REFLECTIVE PAVEMENT MARKERS ARE TO BE PLACED IN ACCORDANCE WITH FDOT STANDARD INDEX NO. 706-001.
7. LOCATION OF SIGNS IS APPROXIMATE ONLY AND IS SUBJECT TO CHANGE AS DIRECTED BY THE ENGINEER.
8. FOR ADDITIONAL DETAILS SEE INDEX NO. 700-010, 711-001 AND 711-002.
9. ALL TRAFFIC CONTROL SIGNS SHALL BE FABRICATED USING 3M BRAND DIAMOND GRADE VIP REFLECTIVE SHEETING ON MINIMUM .08 GA ALUMINUM BLANKS, ALL SIGNS SHALL BE INSTALLED ON 2"x2" SQUARE STEEL POSTS WITH 3/8" HOLES SPACED AT 1" ON CENTER.

LEGEND

- TYPE "F" CURB
- 2' ENVIRONMENTAL CURB
- TRANSITION FROM "F" CURB TO FLUSH
- TRANSITION FROM "F" CURB TO ENVIRONMENTAL CURB
- CONCRETE WHEEL STOP
- 24" ADA MAT
- SITE LIGHTING SEE SHEET ARCHITECTURAL PLANS FOR DETAILS

PAVING LEGEND

CONCRETE PAVEMENT — 8" CONCRETE (4,000 P.S.I. @ 28 DAYS) #5 REBAR 12" ON CENTER BOTH WAYS WITH 2" MINIMUM COVER 12" STABILIZED SUBGRADE (LBR 40) MIN OF 98% MODIFIED PROCTOR MAX DRY DENSITY PER ASTM D1557, AASHTO T-180 (6" LIFTS) SEE DETAILS, THIS SHEET AND SHEET No. 14 & 18

CONCRETE SIDEWALK — 4" THICK CONCRETE (3,000 P.S.I. @ 28 DAYS), CLASS I, APPROVED FDOT DESIGN MIX (FDOT INDEX No. 522-001) SEE DETAIL SHEET No. 13 & 18

STRIPING LEGEND:

1. 6" SOLID WHITE LINE (TYPICAL)
2. 6" SOLID DOUBLE YELLOW LINE (TYPICAL)
3. 24" WHITE STOP BAR (THERMOPLASTIC)
4. STANDARD EMPHASIS CROSSWALK (THERMOPLASTIC)
5. SPECIAL EMPHASIS CROSSWALK (THERMOPLASTIC)

CURB RAMP LEGEND:

1. SIDEWALK CURB RAMP (CR-C) WITH 24" DETECTABLE WARNING MAT PER FDOT INDEX 522-002
2. SIDEWALK CURB RAMP (CR-E) WITH 24" DETECTABLE WARNING MAT PER FDOT INDEX 522-002

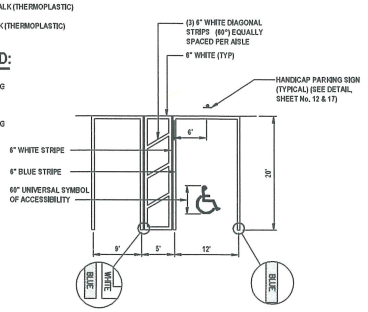

NOTE: MAXIMUM PAVEMENT SLOPE 1/4" PER FOOT ANY DIRECTION IN SPACE AND AISLE.

(UNIVERSAL SPACES PER FLORIDA ADA)

HANDICAP PARKING STRIPING

SCALE: 1" = 10'

REVISIONS

DATE	DESCRIPTION
4/11/23	CITY COMMENTS
5/17/23	ARCHITECT COMMENTS
5/18/23	BIDDING
8/16/23	ADDENDUM #3

1230 North US1, Suite 3
Ormond Beach, Florida 32174
Phone (386) 872-7794
www.newkirkengineering.com
C.A. # 30209
L.C. # 26000584
© 2013
Civil Engineering
Transportation &
Landscape Architecture
NEWKIRK ENGINEERING INC.

SITE LAYOUT PLAN
REPLACEMENT FIRE STATION # 96
1020 DAYTONA AVENUE
HOLLY HILL, FL 32117

THIS DRAWING IS THE PROPERTY OF NEWKIRK ENGINEERING PAY USE OR REPRODUCTION IN WHOLE OR PART IS PROHIBITED WITHOUT THE EXPRESSED WRITTEN CONSENT OF NEWKIRK ENGINEERING COPYRIGHT 2013 ALL RIGHTS RESERVED

THIS ITEM HAS BEEN DIGITALLY SIGNED AND SEALED BY HARRY NEWKIRK, PE # 62971 ON

HARRY NEWKIRK LICENSE NO. 62971 STATE OF FLORIDA PROFESSIONAL ENGINEER

PRINTED COPIES OF THIS DOCUMENT ARE NOT CONSIDERED SIGNED AND SEALED AND THE SIGNATURE MUST BE VERIFIED ON ANY ELECTRONIC COPIES.

PROJECT No:	2022-205
DATE:	MAY 18, 2023
DESIGN BY:	HHN
DRAWN BY:	NWS
CHECKED BY:	HHN
SCALE:	1" = 20'

DRAWING NUMBER

6

PROJECT: REPLACEMENT FIRE STATION #96
CITY OF HOLLY HILL, FL
1020 Daytona Avenue,
Holly Hill, FL 32117

A/E Project No. 2204

OWNER: CITY OF HOLLY HILL
1065 Ridgewood Avenue,
Holly Hill, FL 32117

ARCHITECT: HALL & OGLE ARCHITECTS, INC.
208 Magnolia Ave.
Daytona Beach, FL 32114
386-255-6163

ENGINEERS: NEWKIRK ENGINEERING INC.
Ormond Beach, FL

AB CONSULTING ENGINEERS
Orlando, FL

DELOSE O'NEAL ENGINEERNG
Debary, FL

G & P ENGINEERING LLC
Winter Springs, FL

JOHN M. PATTERSON
Ormond Beach, FL

ADDENDUM NUMBER 4 DATED 22 AUGUST 2023

This Addendum is being issued to the project documents for this project. This addendum is part of the contract documents and modifies/ clarifies the project plans and specifications as follows:

BIDDER QUESTIONS:

ADD. 4.01 Drawing Sheet A4.0, A4.1, & A4.2: Building Sections and Wall Types

All sections show interior studs at main Admin/ Residential areas going to bottom of the LT. GA. Metal trusses (Elevation +10'-8" above slab).
Add Clarification:

1. Wall type 4: studs to 10'-8" brace to bottom of LT. GA. Trusses. GWB to go to 8" above ceiling typ.
2. Wall type 5 and 6: studs to run to roof deck per details on sheet A4.2. Provide 5/8" impact GWB at all corridors to 4' above slab at corridor side only. Remaining GWB to be 5/8" non-impact.
3. Provide wall insulation to roof deck around all offices, bunk rooms, toilet rooms, and mechanical room.
4. At wall types 1A and 2: delete reference to interior plaster finish. Provide painted GWB finish in exposed areas per specification section.

Attachment: Exhibit D - A.G. Pifer Construction - 22-BG-06 Bid Proposal (2023-R-55 : Fire Station Construction)

ADD. 4.02 Invitation to Bid

Question: At page 17, bid schedule, site work items – Where do we include the permanent fencing and flagpole?

Response: Revise; Add items 6A and 6B to the site work section.
See below revised site work section.

NO	DESCRIPTION	UNIT	TOTAL PRICE
1	Site Sub Mobilization/ Demolition/ site Preparation	LS	
2	Earthwork	LS	
3	Paving	LS	
4	Drainage	LS	
5	Water/ Sewer/ Miscellaneous Utilities	LS	
6	Landscaping/ Irrigation	LS	
6A	Permanent Fencing	LS	
6B	Flagpole	LS	

Question: At page 19, unit pricing, at unit pricing item 'C', please clarify if this figure is for drive areas or sidewalks. It cannot be both.

Response: Revise item 'C' to be civil site concrete work for drive areas.
Add item 'F' to be civil site concrete work for sidewalks.
See below revised unit pricing section.

NO	DESCRIPTION	UNIT	TOTAL PRICE
A	Import Fill for Site Work	CY	
B	Export Soil Removal from Site	CY	
C	Civil Site Concrete Work for Drive Areas	CY	
D	Concrete Work in Above Slab Work Areas	CY	
E	Concrete for Slab and Foundation Work	CY	
F	Civil Site Concrete for Sidewalks	CY	

Question: Bid schedule, bidding, item 22 – Please provide specification on flooring materials or an allowance for material. There are no selections on flooring.

Response: Reference sheet A6.0 room finish schedule that list floor finishes for all spaces. Reference specification sections 09 3000 Tile, 09 6519 LVT Flooring, 09 6750 Fluid Applied Flooring, and 09 9000 Painting for additional floor paint systems.
All flooring systems to be together as item 22.

ADD. 4.03 Specification Section 08 5113: Aluminum Windows

Question: Will project accept Kawneer 501 impact system.

Response: No, the request must meet all the requirements of specification section 01 600 and section 08 5113. This has not been done.

Question: Is the project a must mitigation blast or is Level E impact acceptable without the blast.

Response: This project is a risk category IV per design loads on sheet S0.0 (Structural). Also specification section 08 5113, aluminum windows requires large and small missile impact resistance and no blast resistance.

Attachment: Exhibit D - A.G. Pifer Construction - 22-BG-06 Bid Proposal (2023-R-55 : Fire Station Construction)

Question: What is the make up for glazing?

Response: Glass is a 9/16" monolithic impact glazing system:
3/16" clear with Solarban 90 (Low E) heat strength 0.090 PVB interlayer
3/16" clear heat strengthened
Glazing system to meet SHGC of 0.25 minimum.

ADD. 4.04 Drawing Sheet E3.0: Lighting Plan

Question: What type of ceiling fans need to be quoted for the truck bay area?

Response: The (4) CF2 (ceiling fans) at the apparatus bay should be commercial grade with exterior rating 48-52 inch blade width.
The (2) CF1 at physical training should be commercial grade with exterior rating 36" blade width.

ADD. 4.05 Drawing Sheet A1.0 & E3.0: Site Plan and Lighting Plan

Question: Who is supplying the backup generator?

Response: The new backup generator is supplied by and hooked up by the electrical contractor per sheet E3.0. The G.C. is to provide the foundation, fence enclosure, and roof cover system.
The cost for complete package is to be shown on bid schedule services, item 29 – emergency generator system.

ADD. 4.06 General Project Schedule Question

There is a concern that some items might have long lead times.

Response: Bid the project per the bid package and project documents. Lead time issues will be discussed and resolved with selected contractor before award of project.

END OF ADDENDUM NO. 4

Attachment: Exhibit D - A.G. Pifer Construction - 22-BG-06 Bid Proposal (2023-R-55 : Fire Station Construction)

PROJECT:	REPLACEMENT FIRE STATION #96 CITY OF HOLLY HILL, FL 1020 Daytona Avenue, Holly Hill, FL 32117
	A/E Project No. 2204
OWNER:	CITY OF HOLLY HILL 1065 Ridgewood Avenue, Holly Hill, FL 32117
ARCHITECT:	HALL & OGLE ARCHITECTS, INC. 208 Magnolia Ave. Daytona Beach, FL 32114 386-255-6163
ENGINEERS:	NEWKIRK ENGINEERING INC. Ormond Beach, FL
	AB CONSULTING ENGINEERS Orlando, FL
	DELOSE O'NEAL ENGINEERNG Debary, FL
	G & P ENGINEERING LLC Winter Springs, FL
	JOHN M. PATTERSON Ormond Beach, FL

ADDENDUM NUMBER 5 DATED 24 AUGUST 2023

This Addendum is being issued to the project documents for this project. This addendum is part of the contract documents and modifies/ clarifies the project plans and specifications as follows:

BIDDER QUESTIONS:

ADD. 5.01 General Questions

Question 1: Please clarify the R-value of the flat roof system.

Response: Material key calls for R-30 for flat and pitched roofs.

Question 2: Please clarify if the owner requires the awarded G.C. to provide "Builder's Risk" insurance for full contract value with the city listed as loss payee.

Response: Yes, provide 100% coverage per ITB section 000800A(111)A.

Attachment: Exhibit D - A.G. Pifer Construction - 22-BG-06 Bid Proposal (2023-R-55 : Fire Station Construction)

Question 3: The foundations in section 3/S2.0 are not on the schedule or identified on sheet S1.0. Please clarify.

Response: The masonry columns MC1 have a continuous footing WF30 as shown in plan and foundation schedule on sheet S1.0. The detail 3/S2.0 is not used on this project. The connection of vertical steel to footing is similar.

Question 4: Is there an interface device required to connect the phone system to access the paging system? This is a device that is used if there is a phone system installed in a facility. If there is only one phone line, then this would not be used.

Response: Yes, this will be required to facilitate paging from multiple locations.

Question 5: Please clarify if cameras are furnished and installed by the owner.

Response: Black box and wire path to data closet to be provided by electrical contractor. See legend. Equipment and wiring for security system by owner.

Question 6: The specification for standing seam roof state plywood deck and doesn't specify insulation, and details on sheet A2.2 show 8" insulation on steel deck. Please clarify.

Response: Sheet A2.2 shows metal roof details and roof insulation. Detail 2/A2.2 calls for 6" thick insulation typ. The material key on building/ wall section sheets call for a 6" thick R-30 insulation system typ.

Question 7: Door 27 is called to be fiberglass with vision lite in aluminum frame. There is no door manufacturer that has a level E FPA.

Response: Door 27 to be hollow metal door and frame with no vision panel. Keep hardware as specified and provide level E compliance.

Question 8: Specification section 10 1400 – Plastic Signs does not include the City Fire Rescue logo sign shown on plan sheet A3.0. Will the City furnish and install this?

Response: No, G.C. to supply a 44" painted aluminum logo as shown on sheet A3.0. City will provide artwork for specialty signage for subcontractor to use. Size per detail and baked enamel finish. Colors per artwork. Flush stud install per manufacturer requirements and 1" deep. Provide 8" H cast aluminum numbers 1020 (building address) at entry tower as shown on sheet A3.0. Numbers to be baked enamel finish, flush stud installation, and Helvetica type 1" deep.

Question 9: 3. Plan Sheet A2.0 indicates the G.C. to include the #5 flat screen TV and #26 Bronze dedication plaque. Please provide more info on these or perhaps these could be changed to OS/CI.

Response: Item 5 in the schedule is a flat screen wall mount bracket (NOT the TV). Provide wood blocking at stud wall. TV and bracket to be owner supplied and contractor installed.
Item 26 bronze dedication plaque is detailed on sheet A7.3. Provide an allowance for a 24"x30" with similar text and logo. As shown it will be contractor supplied and contractor installed.

Attachment: Exhibit D - A.G. Pifer Construction - 22-BG-06 Bid Proposal (2023-R-55 : Fire Station Construction)

Question 10: We assume bid schedule item 18 needs to include the (4) overhead garage doors.

Response: Yes, they are part of this bid item.
Question 11: Where do we include the cost of section 09 2400 – Cement Plaster in the bid schedule?

Response: Include it in item 12 – Masonry Work/ Stone Panels

Question 12: Where do we include the cost of painting? Please allow one L.S. item for painting.

Response: We have revised the bid schedule and added item 25 – Painting. See attached revised bid schedule.

Question 13: Due to the changes to the forms, please issue a revised Cost Breakdown Schedule – section 00 31 00 Schedule of unit prices.

Response: See attached revised bid schedule.

Question 14: Page A2.2 diagrams 1,2,3 and 4 show PolyISO to be 8" but if measured on plans it is 3". However, A3.0 under Main Roof System it shows 6" PolyISO but then states R30 Average, which would be 5.2". Please advise on ISO thickness under .040 Aluminum panels.

Response: Roof insulation is to be 6" thick at metal roofs.

Question 15: On page A3.0 it states a Base sheet, R30 insulation with a taper, and 1/2" mineral board. Is it correct to assume they want a 1/2" Densdeck layer over the ISO Taper and fully adhered .080 TPO?

Response: Correct, ½" cover board to be ½" Densdec cover board.

Question 16: We can do Carlisle .115 Fleeceback TPO for the same price as .080. This is a much better system, especially with Densdeck cover board. Is this an acceptable alternate?

Response: Bid per 080 TPO specified (it may be accepted after bid if owner chooses).

Question 17: What are the AL and AS symbols in restrooms 114 and 115? Would like to have verified for potential systems scope of work.

Response: Please ignore those two symbols in restrooms.

Question 18: What disconnects are to be provided and installed by the electrical contractor? Only one I see identified is for the compressor in the stairwell (no info given) – checked Electrical & Mechanical Drawings.

Response: All required disconnects are to be furnished and installed by electrical contractor.

Question 19: Is the electrical contractor to provide disconnect and clock box for Range Hood System or will that be provided by others? Please advise.

Response: Electrical contractor to provide disconnect and the balance of the system equipment, including clock box if present, will be furnished by others.

Attachment: Exhibit D - A.G. Pifer Construction - 22-BG-06 Bid Proposal (2023-R-55 : Fire Station Construction)

Question 20: What is the existing brand/manufacturer for the following?
Fire Alarm Devices
Intercom Speakers/ Devices
Security Cameras/ Devices
Access Control Devices/ Card Readers

Response: New equipment will not necessarily be manufactured by the same company.

END OF ADDENDUM NO. 5

Attachment: Exhibit D - A.G. Pifer Construction - 22-BG-06 Bid Proposal (2023-R-55 : Fire Station Construction)

SECTION 00 31 00
SCHEDULE OF UNIT PRICES
CITY OF HOLLY HILL

FIRE STATION CONSTRUCTION

BID# 22-BG-06

BID SCHEDULE
FIRE STATION CONSTRUCTION

_____
RESPONDENT

Site Work

NO	DESCRIPTION	UNIT	TOTAL PRICE
1	Site Sub Mobilization/Demolition/Site Preparation	LS	
2	Earthwork	LS	
3	Paving	LS	
4	Drainage	LS	
5	Water/Sewer/Miscellaneous Utilities	LS	
6	Landscaping/Irrigation	LS	

Building

NO	DESCRIPTION	UNIT	TOTAL PRICE
7	GC Mobilization/Survey/Miscellaneous	LS	
8	Supervision	LS	
9	General Labor	LS	
10	Building Layout/Preparation/Termite Treatment	LS	
11	Concrete Work	LS	
12	Masonry Work, Stone Panels and Concrete Plasters	LS	
13	Steel Framing / Roof Joists and Deck	LS	
14	Lt. Ga. Trusses / Miscellaneous Lt. Ga. Exterior Framing	LS	
15	Roof System Low Slope/Pitched w/ Insulation System	LS	

Attachment: Exhibit D - A.G. Pifer Construction - 22-BG-06 Bid Proposal (2023-R-55 : Fire Station Construction)

16	Miscellaneous Framing/Sheeting/Decking/Flashing/Trim	LS	
17	Ext. Air/Vapor/Water Sealing Masonry Walls	LS	
18	Ext/Int Doors/Hardware/Windows/Louvers	LS	
19	Interior Framing/GWB System/Finishes	LS	
20	Miscellaneous Insulation/Sealing	LS	
21	Ceiling System/Finishes	LS	
22	Floor System/Finishes	LS	
23	Millwork System	LS	
24	Miscellaneous Specialties/Accessories	LS	
25	Painting – Interior & Exterior	LS	

Services

NO	DESCRIPTION	UNIT	TOTAL PRICE
26	Plumbing/Gas System	LS	
27	Fire Protection	LS	
28	HVAC	LS	
29	Electric System/IT System/Lightning Protection System	LS	
30	Emergency Generator System	LS	
31	Owner's Unforeseen Contingency Allowance	LS	$20,000.00

Contractor Fees

NO	DESCRIPTION	UNIT	TOTAL PRICE
32	General Conditions/Overhead/Profit	LS	
33	Performance/Payment Bond	LS	
34	Permits/Fees (as required)	LS	

Attachment: Exhibit D - A.G. Pifer Construction - 22-BG-06 Bid Proposal (2023-R-55 : Fire Station Construction)

Total Bid Cost _____
(In Figures)

Total Bid Cost _____
(In Words)

Unit Pricing Add/Deduct

NO	DESCRIPTION	UNIT	UNIT COST
A	Import Fill for Site Work	CY	
B	Export Soil Removal from Site	CY	
C	Civil Site Concrete Work for Drive Areas and Sidewalks	CY	
D	Concrete Work in Above Slab Work Areas	CY	
E	Concrete for Slab and Foundation Work	CY	

* The Unit Pricing Add/Deduct Section is for the establishment of unit prices in the event that change orders are required.

Submitted by: _____
Contractor: _____
Address: _____
Telephone: _____ Fax: _____
State of Florida Certified General Contractor or Underground Contractor (Required Information)
Licensee: _____ License No: _____

Attachment: Exhibit D - A.G. Pifer Construction - 22-BG-06 Bid Proposal (2023-R-55 : Fire Station Construction)

PROJECT:	REPLACEMENT FIRE STATION #96 CITY OF HOLLY HILL, FL 1020 Daytona Avenue, Holly Hill, FL 32117
	A/E Project No. 2204
OWNER:	CITY OF HOLLY HILL 1065 Ridgewood Avenue, Holly Hill, FL 32117
ARCHITECT:	HALL & OGLE ARCHITECTS, INC. 208 Magnolia Ave. Daytona Beach, FL 32114 386-255-6163
ENGINEERS:	NEWKIRK ENGINEERING INC. Ormond Beach, FL
	AB CONSULTING ENGINEERS Orlando, FL
	DELOSE O'NEAL ENGINEERNG Debary, FL
	G & P ENGINEERING LLC Winter Springs, FL
	JOHN M. PATTERSON Ormond Beach, FL

ADDENDUM NUMBER 6 DATED 25 AUGUST 2023

This Addendum is being issued to the project documents for this project. This addendum is part of the contract documents and modifies/ clarifies the project plans and specifications as follows:

BIDDER QUESTIONS:

ADD. 6.01 General Questions

Question 1: G.C. is expected to pay the building permit fees per schedule. We assume the owner will pay for all impact fees including County Road impact fee. If these costs are to be borne by the G.C. please provide us with the City's impact fees amount.

Response: The City impact fees will be included in the permit cost, which will be paid by the City. The City will also pay for the Volusia County Transportation Impact Fee.

END OF ADDENDUM NO. 6

Attachment: Exhibit D - A.G. Pifer Construction - 22-BG-06 Bid Proposal (2023-R-55 : Fire Station Construction)

SECTION 00 31 00
SCHEDULE OF UNIT PRICES
CITY OF HOLLY HILL

FIRE STATION CONSTRUCTION

BID# 22-BG-06

BID SCHEDULE
FIRE STATION CONSTRUCTION

A.G. Pifer Construction
RESPONDENT

Site Work

NO	DESCRIPTION	UNIT	TOTAL PRICE
1	Site Sub Mobilization/Demolition/Site Preparation	LS	$78,280.00
2	Earthwork	LS	$35,895.00
3	Paving	LS	$239,615.00
4	Drainage	LS	$71,770.00
5	Water/Sewer/Miscellaneous Utilities	LS	$83,445.00
6	Landscaping/Irrigation	LS	$57,620.00
	6A - Permanent Fencing	LS	$12,000.00
	6B - Flag Pole	LS	$8,500.00

Building

NO	DESCRIPTION	UNIT	TOTAL PRICE
7	GC Mobilization/Survey/Miscellaneous	LS	$100,000.00
8	Supervision	LS	$120,000.00
9	General Labor	LS	$131,000.00
10	Building Layout/Preparation/Termite Treatment	LS	$6,000.00
11	Concrete Work	LS	$158,000.00
12	Masonry Work, Stone Panels and Concrete Plasters	LS	$425,557.00
13	Steel Framing / Roof Joists and Deck	LS	$215,600.00
14	Lt. Ga. Trusses / Miscellaneous Lt. Ga. Exterior Framing	LS	$66,355.00
15	Roof System Low Slope/Pitched w/ Insulation System	LS	$221,000.00

Attachment: Exhibit D - A.G. Pifer Construction - 22-BG-06 Bid Proposal (2023-R-55 : Fire Station Construction)

Total Bid Cost $3,953,102.61
(In Figures)

Total Bid Cost Three Million Nine Hundred Fifty Three Thousand One Hundred Two Dollars and Sixty One Cents
(In Words)

Unit Pricing Add/Deduct

NO	DESCRIPTION	UNIT	UNIT COST
A	Import Fill for Site Work	CY	$20.00
B	Export Soil Removal from Site	CY	$15.00
C	Civil Site Concrete Work for Drive Areas ~~and Sidewalks~~	CY	$517.73
D	Concrete Work in Above Slab Work Areas	CY	$275.00
E	Concrete for Slab and Foundation Work	CY	$200.00

* The Unit Pricing Add/Deduct Section is for the establishment of unit prices in the event that change orders are required.

F - Civil Site Conrete Work for Sidewalks CY $228.15

Submitted by: Anthony Gregg Pifer
Contractor: A.G. Pifer Construction Co. Inc.
Address: 3629 Old Deland Road, Daytona Beach, FL 32124
Telephone: 386-257-4448 Fax: 386-257-5503
State of Florida Certified General Contractor or Underground Contractor (Required Information)
Licensee: Anthony Gregg Pifer License No: CGC040437

Attachment: Exhibit D - A.G. Pifer Construction - 22-BG-06 Bid Proposal (2023-R-55 : Fire Station Construction)

SECTION 00 30 00
PROPOSAL

FOR

CITY OF HOLLY HILL

FIRE STATION CONSTRUCTION

BID NO. 22-BG-06

(To be completed in Duplicate)

Bidder's Name: CIC CONSTRUCTION GROUP USA, LLC

Submitted: 08 / 29, 2023

City of Holly Hill
City Clerk
1065 Ridgewood Avenue
Holly Hill, FL 32117

To Whom it May Concern:

The undersigned, as Bidder, hereby declares that the only person or persons interested in the Proposal, as principal or principals, is or are named herein and that no other persons than herein mentioned has any interest in the Proposal or the Contract to which the work pertains; that this Proposal is made without connection or arrangement with any other person, company, or parties making a bid or proposal and that the Proposal is in all respects fair and made in good faith without collusion or fraud.

The Bidder further declares that he has examined the site of the work and that from personal knowledge and experience, or that he/she has made sufficient test holes and/or other subsurface investigations to fully satisfy self that such site is a correct and suitable one for this work and he/she assumes full responsibility therefore; that he/she is familiar with all legal requirements (Federal, State and local laws, ordinances, rules and regulations) pertaining to the Work; that he/she has examined the Drawings and Specifications for the work and from his/her own experience or from professional advice that the Drawings and Specifications are sufficient for the work to be done and he/she has examined the other Contract Documents and all addenda relating thereto, and that he/she has satisfied himself/herself fully, relative to all matters and conditions with respect to the work to which this Proposal pertains.

The Bidder proposes and agrees, if this Proposal is accepted, to contract with the City of Holly Hill, (Owner) in the form of contract specified, to furnish all necessary materials, equipment, machinery, tools, apparatus, transportation, and labor and to perform all work necessary to complete the Work

Attachment: Exhibit E - CIC Construction Group USA - 22-BG-06 Bid Proposal (2023-R-55 : Fire Station Construction)

specified in the Proposal and other Contract Documents. The Bidder further proposes and agrees to comply in all respects with the time limits for commencement and completion of the Work as stated in the Contract Form.

The Bidder further agrees that the deductions for liquidated damages, as stated in the Contract Form, constitute fixed and agreed liquidated damages to reimburse the Owner for additional costs to the Owner resulting from the Work not being completed within the time limit stated in the Contract Form.

The undersigned agrees to accept as full compensation for completion of the project in full compliance with the Contract Documents, the unit prices for the items named in Section 00 31 00, Schedule of Unit Prices, submitted herein with this Proposal.

The undersigned offers to furnish all materials, equipment and labor for construction of,

FIRE STATION CONSTRUCTION

for the City of Holly Hill, Florida, complete in every respect in strict accordance with the drawings, specifications and any future changes therein. The Contractor shall perform these obligations for the prices listed in the "Schedule of Unit Prices: Section 00 31 00" attached and made a part of this Bid. **The bid total is:**

Three million eight hundred three thousand nine hundred seventy two dollars
(In Words)

Dollars $ 3,803,972.00 (In Figures)

COMPLETION TIME OF CONTRACT

The Contractor agrees that the work shall be started not later than the date indicated in the Notice to Proceed and that the total work shall be completed within **365 days.**

The Contractor further agrees that for each calendar day, with the exception of Sundays and legal holidays that any work shall remain uncompleted after the stations completion times stipulated above the sum of **$500 (Five Hundred Dollars)** per day shall be deducted from monies due the contractor, not as a penalty, but as liquidated damages. If the Contractor is declared in default in accordance with the provisions of the Specifications, liquidated damages shall be charged as provided herein, and such amounts shall be deducted from the final amount payable to the Contractor or his/her Surety. Should the total amount chargeable as liquidated damages exceed the amount due or payable to the Contractor or his/her Surety, then such excess shall be paid to the Owner by the Contractor or his/her Surety.

Attachment: Exhibit E - CIC Construction Group USA - 22-BG-06 Bid Proposal (2023-R-55 : Fire Station Construction)

SUPPLEMENTAL REQUIREMENTS

The following documents are attached to and made a condition of this bid:

Schedule of Unit Prices: Section 00 31 00
Statement of Bidder's Qualifications: 00 32 00
Listing of Subcontractors: Section 00 33 00
Listing of Previous Experience: Section 00 33 10
Public Entity Crimes Statement: Section 00 47 00
Anti-Collusion Statement: Section 00 48 00
Drug Free/Tie Preference Statement: Section 00 48 50
Compliance with Public Records Law 00 48 60
W-9 Form 00 48 70
E-Verify Compliance 00 48 80
City of Holly Hill Insurance Requirements: Section 00 80 00A

REQUIRED DISCLOSURE

At its sole discretion, the City of Holly Hill, Florida may reject any bidder the City finds to lack, or whose present or former executive employees, officers, directors, stockholders, partners or owners are found by the City to lack honesty, integrity, or moral responsibility. The discretion of the City may be exercised based on the City's own investigation, public records, or any other reliable sources of information. By submitting a bid, bidder recognizes and accepts that the City may reject the bid based upon the exercise of its sole discretion and bidder waives any claim it might have for damages or other relief resulting from the rejection of its bid based on these grounds.

Attachment: Exhibit E - CIC Construction Group USA - 22-BG-06 Bid Proposal (2023-R-55 : Fire Station Construction)

ACKNOWLEDGMENT OF ADDENDA

Addenda will be issued via email and it is the Bidder's responsibility to confirm that all addenda have been received prior to submitting a bid for the project. Acknowledgment is hereby made of the following Addenda received since issuance of Drawings and Specifications:

Addendum No.	1	Dated: 08/10/23	Addendum No.	4	Dated: 08/22/23
Addendum No.	2	Dated: 08/15/23	Addendum No.	5	Dated: 08/24/23
Addendum No.	3	Dated: 08/16/23	Addendum No.	6	Dated: 08/25/23

Attached hereto is a cashier's check on the _____ Bank of _____ or Bid Bond for the sum of TWO HUNDRED THOUSAND Dollars ($200,000.00), (5% of total bid amount) made payable to City of Holly Hill (Owner).

CIC CONSTRUCTION GROUP USA, LLC
(Name of Bidder) (Affix Seal)

(Signature of Officer)

EDWIN CARRASQUILLO-EXECUTIVE DIRECTOI
(Title of Officer)

CIC CONSTRUCTION GROUP USA, LLC
Name of Bidder

3361 ROUSE RD, SUITE 135
Address

ORLANDO, FL 32817
City/State/Zip

407-269-5151
Telephone

CGC1523164
Contractor's Florida License Number

The full names and residences of persons and firms interested in the foregoing bid, as principals, are as follows:

EDWIN CARRASQUILLO - EXECUTIVE DIRECTOR - 14954 Hawksmoor Run Cir, Orlando, FL 32828

END OF SECTION

Attachment: Exhibit E - CIC Construction Group USA - 22-BG-06 Bid Proposal (2023-R-55 : Fire Station Construction)

BID BOND

TRAVELERS CASUALTY AND SURETY COMPANY OF AMERICA
Hartford, Connecticut 06183

KNOWN ALL BY THESE PRESENTS, That we, CIC Construction Group USA, LLC, as Principal, and Travelers Casualty and Surety Company of America, as Surety, are held and firmly bound unto City of Holly Hill Commission Chamber, as Obligee, in the sum of Five Percent of Amount Bid Dollars ($5%) for the payment of which we bind ourselves, and our successors and assigns, jointly and severally, as provided herein.

WHEREAS, Principal has submitted or is about to submit a bid to the Obligee on a contract for 22-BG-06; REPLACEMENT FIRE STATION #96 at HOLLY HILL, FL ("Project").

NOW, THEREFORE, the condition of this bond is that if Obligee accepts Principal's bid, and Principal enters into a contract with Obligee in conformance with the terms of the bid and provides such bond or bonds as may be specified in the bidding or contract documents, then this obligation shall be void; otherwise Principal and Surety will pay to Obligee the difference between the amount of Principal's bid and the amount for which Obligee shall in good faith contract with another person or entity to perform the work covered by Principal's bid, but in no event shall Surety's and Principal's liability exceed the penal sum of this bond.

Signed this 29th day of August, 2023.

CIC Construction Group USA, LLC
(Principal)

By: _____

CIC Construction Group USA, LLC CIC USA

Travelers Casualty and Surety Company of America

By: _____
Stephen A. Vann, Attorney-in-Fact

Attachment: Exhibit E - CIC Construction Group USA - 22-BG-06 Bid Proposal (2023-R-55 : Fire Station Construction)

TRAVELERS

Travelers Casualty and Surety Company of America
Travelers Casualty and Surety Company
St. Paul Fire and Marine Insurance Company

POWER OF ATTORNEY

KNOW ALL MEN BY THESE PRESENTS: That Travelers Casualty and Surety Company of America, Travelers Casualty and Surety Company, and St. Paul Fire and Marine Insurance Company are corporations duly organized under the laws of the State of Connecticut (herein collectively called the "Companies"), and that the Companies do hereby make, constitute and appoint **STEPHEN A VANN** of **ATLANTA**, **Georgia**, their true and lawful Attorney(s)-in-Fact to sign, execute, seal and acknowledge any and all bonds, recognizances, conditional undertakings and other writings obligatory in the nature thereof on behalf of the Companies in their business of guaranteeing the fidelity of persons, guaranteeing the performance of contracts and executing or guaranteeing bonds and undertakings required or permitted in any actions or proceedings allowed by law.

IN WITNESS WHEREOF, the Companies have caused this instrument to be signed, and their corporate seals to be hereto affixed, this **21st** day of **April, 2021.**

State of Connecticut

City of Hartford ss.

By: _____
Robert L. Raney, Senior Vice President

On this the **21st** day of **April, 2021**, before me personally appeared **Robert L. Raney**, who acknowledged himself to be the Senior Vice President of each of the Companies, and that he, as such, being authorized so to do, executed the foregoing instrument for the purposes therein contained by signing on behalf of said Companies by himself as a duly authorized officer.

IN WITNESS WHEREOF, I hereunto set my hand and official seal.

My Commission expires the **30th** day of **June, 2026**

_____
Anna P. Nowik, Notary Public

This Power of Attorney is granted under and by the authority of the following resolutions adopted by the Boards of Directors of each of the Companies, which resolutions are now in full force and effect, reading as follows:

RESOLVED, that the Chairman, the President, any Vice Chairman, any Executive Vice President, any Senior Vice President, any Vice President, any Second Vice President, the Treasurer, any Assistant Treasurer, the Corporate Secretary or any Assistant Secretary may appoint Attorneys-in-Fact and Agents to act for and on behalf of the Company and may give such appointee such authority as his or her certificate of authority may prescribe to sign with the Company's name and seal with the Company's seal bonds, recognizances, contracts of indemnity, and other writings obligatory in the nature of a bond, recognizance, or conditional undertaking, and any of said officers or the Board of Directors at any time may remove any such appointee and revoke the power given him or her; and it is

FURTHER RESOLVED, that the Chairman, the President, any Vice Chairman, any Executive Vice President, any Senior Vice President or any Vice President may delegate all or any part of the foregoing authority to one or more officers or employees of this Company, provided that each such delegation is in writing and a copy thereof is filed in the office of the Secretary; and it is

FURTHER RESOLVED, that any bond, recognizance, contract of indemnity, or writing obligatory in the nature of a bond, recognizance, or conditional undertaking shall be valid and binding upon the Company when (a) signed by the President, any Vice Chairman, any Executive Vice President, any Senior Vice President or any Vice President, any Second Vice President, the Treasurer, any Assistant Treasurer, the Corporate Secretary or any Assistant Secretary and duly attested and sealed with the Company's seal by a Secretary or Assistant Secretary; or (b) duly executed (under seal, if required) by one or more Attorneys-in-Fact and Agents pursuant to the power prescribed in his or her certificate or their certificates of authority or by one or more Company officers pursuant to a written delegation of authority; and it is

FURTHER RESOLVED, that the signature of each of the following officers: President, any Executive Vice President, any Senior Vice President, any Vice President, any Assistant Vice President, any Secretary, any Assistant Secretary, and the seal of the Company may be affixed by facsimile to any Power of Attorney or to any certificate relating thereto appointing Resident Vice Presidents, Resident Assistant Secretaries or Attorneys-in-Fact for purposes only of executing and attesting bonds and undertakings and other writings obligatory in the nature thereof, and any such Power of Attorney or certificate bearing such facsimile signature or facsimile seal shall be valid and binding upon the Company and any such power so executed and certified by such facsimile signature and facsimile seal shall be valid and binding on the Company in the future with respect to any bond or understanding to which it is attached.

I, **Kevin E. Hughes**, the undersigned, Assistant Secretary of each of the Companies, do hereby certify that the above and foregoing is a true and correct copy of the Power of Attorney executed by said Companies, which remains in full force and effect.

Dated this **29th** day of **August**, **2023**.

_____
Kevin E. Hughes, Assistant Secretary

To verify the authenticity of this Power of Attorney, please call us at 1-800-421-3880.
Please refer to the above-named Attorney(s)-in-Fact and the details of the bond to which this Power of Attorney is attached.

Attachment: Exhibit E - CIC Construction Group USA - 22-BG-06 Bid Proposal (2023-R-55 : Fire Station Construction)

FLORIDA INDIVIDUAL ACKNOWLEDGMENT
F.S. 117.05(13) — Effective January 1, 2020

State of Florida
County of ORANGE

The foregoing instrument was acknowledged before me by means of
☑ Physical Presence
- OR -
☐ Online Notarization

this 28 (Date) day of AUGUST (Month), 2023 (Year), by

Notary Public State of Florida
Emely M De Leon
My Commission
HH 242246
Exp. 5/6/2026

EDWIN CAMILA SQUILLO
Name of Person Acknowledging

EMELY M. DE LEON
Signature of Notary Public – State of Florida

EMELY M. DE LEON
Name of Notary Typed, Printed or Stamped

☑ Personally known
☑ Produced Identification
Type of Identification Produced: FLDL

Place Notary Seal Stamp Above

OPTIONAL
Completing this information can deter alteration of the document or fraudulent reattachment of this form to an unintended document.

Description of Attached Document

Title or Type of Document: TRAVELER'S CASUALTY AND SURETY CO. OF AM.

Document Date: [illegible] Number of Pages: 2

Signer(s) Other Than Named Above: STEPHEN A. VANN

©2019 National Notary Association

Attachment: Exhibit E - CIC Construction Group USA - 22-BG-06 Bid Proposal (2023-R-55 : Fire Station Construction)

SECTION 00 31 00
SCHEDULE OF UNIT PRICES
CITY OF HOLLY HILL

FIRE STATION CONSTRUCTION

BID# 22-BG-06

BID SCHEDULE
FIRE STATION CONSTRUCTION

CIC Construction Group USA, LLC
RESPONDENT

Site Work

NO	DESCRIPTION	UNIT	TOTAL PRICE
1	Site Sub Mobilization/Demolition/Site Preparation	LS	$65,047.00
2	Earthwork	LS	$70,579.75
3	Paving	LS	$16,574.00
4	Drainage	LS	$87,200.04
5	Water/Sewer/Miscellaneous Utilities	LS	$74,177.54
6	Landscaping/Irrigation	LS	$63,024.42

Building

NO	DESCRIPTION	UNIT	TOTAL PRICE
7	GC Mobilization/Survey/Miscellaneous	LS	$19,595.00
8	Supervision	LS	$214,020.00
9	General Labor	LS	$31,320.00
10	Building Layout/Preparation/Termite Treatment	LS	$14,662.25
11	Concrete Work	LS	$521,139.00
12	Masonry Work, Stone Panels and Concrete Plasters	LS	$259,010.00
13	Steel Framing / Roof Joists and Deck	LS	$84,688.00
14	Lt. Ga. Trusses / Miscellaneous Lt. Ga. Exterior Framing	LS	$218,935.00
15	Roof System Low Slope/Pitched w/ Insulation System	LS	$27,300.00

Attachment: Exhibit E - CIC Construction Group USA - 22-BG-06 Bid Proposal (2023-R-55 : Fire Station Construction)

16	Miscellaneous Framing/Sheeting/Decking/Flashing/Trim	LS	$27,300.00
17	Ext. Air/Vapor/Water Sealing Masonry Walls	LS	$16,620.00
18	Ext/Int Doors/Hardware/Windows/Louvers	LS	$237,074.00
19	Interior Framing/GWB System/Finishes	LS	$122,242.00
20	Miscellaneous Insulation/Sealing	LS	$3,000.00
21	Ceiling System/Finishes	LS	$9,360.00
22	Floor System/Finishes	LS	$44,903.00
23	Millwork System	LS	$73,512.00
24	Miscellaneous Specialties/Accessories	LS	$29,394.00
25	Painting – Interior & Exterior	LS	$51,136

Services

NO	DESCRIPTION	UNIT	TOTAL PRICE
26	Plumbing/Gas System	LS	$139,931.00
27	Fire Protection	LS	$28,606.00
28	HVAC	LS	$164,830.00
29	Electric System/IT System/Lightning Protection System	LS	$319,963.00
30	Emergency Generator System	LS	$50,000.00
31	Owner's Unforeseen Contingency Allowance	LS	$20,000.00

Contractor Fees

NO	DESCRIPTION	UNIT	TOTAL PRICE
32	General Conditions/Overhead/Profit	LS	$490,949.00
33	Performance/Payment Bond	LS	$22,780.00
34	Permits/Fees (as required)	LS	$0

Attachment: Exhibit E - CIC Construction Group USA - 22-BG-06 Bid Proposal (2023-R-55 : Fire Station Construction)

Total Bid Cost $3,803,972.00
(In Figures)

Total Bid Cost Three million eight hundred three thousand nine hundred
(In Words) seventy-two dollars.

Unit Pricing Add/Deduct

NO	DESCRIPTION	UNIT	UNIT COST
A	Import Fill for Site Work	CY	$25.00
B	Export Soil Removal from Site	CY	$19.55
C	Civil Site Concrete Work for Drive Areas and Sidewalks	CY	$550.00
D	Concrete Work in Above Slab Work Areas	CY	$800.00
E	Concrete for Slab and Foundation Work	CY	$640.00

* The Unit Pricing Add/Deduct Section is for the establishment of unit prices in the event that change orders are required.

Submitted by: Edwin Carrasquillo
Contractor: CIC Construction Group USA, LLC
Address: 3361 Rouse Rd, Suite 135, Orlando, FL 32817
Telephone: 407-269-5151 Fax: 407-930-7775
State of Florida Certified General Contractor or Underground Contractor (Required Information)
Licensee: Edwin Carrasquillo License No: CGC1523164

Attachment: Exhibit E - CIC Construction Group USA - 22-BG-06 Bid Proposal (2023-R-55 : Fire Station Construction)

SECTION 00 32 00

STATEMENT OF BIDDER'S QUALIFICATIONS

All questions must be answered and the data given must be clear and comprehensive. This statement must be notarized. If necessary, questions may be answered on separate attached sheets. The bidder may submit any additional information he desires.

A. Name of bidder.
CIC CONSTRUCTION GROUP USA, LLC

B. Permanent main office address.
3361 ROUSE RD, SUITE 135. ORLANDO, FL 32817

C. When organized.
2019 - Florida Office

D. If a corporation, where incorporated.
N/A

E. How many years have you been engaged in the contracting business under your present firm or trade name?
40 YEARS

F. Contracts on hand: (Schedule these, showing amount of each contract and the appropriate anticipated dates of completion.)
SEE EXHIBIT 1 - CONTRACTS ON HAND.

G. General character of work performed by your company.
GENERAL CONTRACTOR

H.(1) Have you ever failed to complete any work awarded to you? If so, where and why?
N/A

H.(2) Provide list of any lawsuits or judgments filed by or against your company in the last three years, indicating the nature and outcome.
N/A

I. Have you ever defaulted on a contract? If so, where and why?
N/A

J. List the more important projects recently completed by your company, stating the approximate cost for each and the month and year completed.
SEE EXHIBIT 2 - PROJECTS RECENTLY COMPLETED

K. List your major equipment N/A.

L. Experience in construction work similar in type to this project.
SEE SECTION 00 33 10

M. Background and experience of the principal members of your organization, including the officers.
SEE EXHIBIT 3 - RESUMEN

N. Credit available: $ 40,000,000.00

Attachment: Exhibit E - CIC Construction Group USA - 22-BG-06 Bid Proposal (2023-R-55 : Fire Station Construction)

O. Give bank reference: SEE EXHIBIT 4 - BANK REFERENCE

P. Will you, upon request, fill out a detailed financial statement and furnish any other information that may be required by the Owner?

YES, WE WILL.

Q. The undersigned hereby authorizes and requests any person, firm, or corporation to furnish any information requested by the Owner in verification of the recitals comprising this Statement of Bidder's Qualifications.

Dated at this 28 day of AUGUST, 2023.

CIC CONSTRUCTION GROUP USA, LLC
Name of Bidder
By: _____
Edwin Carrasquillo
Executive Director

State of FLORIDA

County of ORANGE

EDWIN CARRASQUILLO being duly sworn deposes and says that he is the EXECUTIVE DIRECTOR of CIC CONS. GROUP and that the answers to the CITY OF HOLLYWOOD foregoing questions
Name of Organization
and all statements therein contained are true and correct.

Subscribed and sworn to before me this 28TH day of AUGUST, 2023.

EMELY M. DE LEON
Notary Public

EMELY M. DE LEON
Notary Public (Print or Type) My commission expires: 05.06.2026

Notary Public State of Florida
Emely M De Leon
My Commission
HH 242246
Exp. 5/6/2026

PHYSICAL PRESENCE
PERSONALLY KNOWN

Attachment: Exhibit E - CIC Construction Group USA - 22-BG-06 Bid Proposal (2023-R-55 : Fire Station Construction)

CIC Construction GROUP

EXHIBIT 1

CONTRACTS ON HAND

Attachment: Exhibit E - CIC Construction Group USA - 22-BG-06 Bid Proposal (2023-R-55 : Fire Station Construction)

PO Box 782415 Orlando, FL 32878 | O: 407-930-7775
E: cicfl@cic-pr.com | I: www.cicconstruction.com

CIC Construction GROUP

EXHIBIT 1: CONTRACTS ON HAND

FIRE STATION CONSTRUCTION
22-BG-06

PROJECT	AMOUNT	ANTICIPATED DATE OF COMPLETION
PARKS TABORFIELD NEIGHBORHOOD PARK	$1,438,741.02	SEPTEMBER 30, 2023.
PARKS RECREATION CENTER ENVELOPE PROTECTION	$1,156,607.00	MARCH 15, 2024.
SUMMERLAKE NEIGHBORHOOD PARK	$1,293,088.25	SEPTEMBER 19, 2023.
MOSQUITO CONTROL FACILITY	10,751,349.00	MARCH 27, 2024.
PARKS BITHLO COMMUNITY CENTER FITNESS CENTER ADDITION	$993,578.44	360 CONSECUTIVE CALENDAR DAYS FROM THE DATE OF OFFICIAL NOTICE TO PROCEED.
EAST ORANGE DISTRICT PARK PLAYGROUND	$504,681.19	SEPTEMBER 30, 2023.
ROSE PLACE PARK PLAYGROUND REPLACEMENT	$576,500.00	OCTOBER 14, 2023
WALT DISNEY WORLD RESORT – MAGIC KINGDOM PARK PINOCCHIO VILLAGE HAUS RESTROOM REHAB	$1,626,000.00	MAY 6, 2024.
SEMINOLE COUNTY FIRE STATION #39	$8,383,000.00	SEPTEMBER 20, 2024.

PO Box 782415 Orlando, FL 32878 | O: 407-930-7775
E: cicfl@cic-pr.com | I: www.cicconstruction.com

Attachment: Exhibit E - CIC Construction Group USA - 22-BG-06 Bid Proposal (2023-R-55 : Fire Station Construction)

CIC Construction GROUP

EXHIBIT 2

Projects Recently Completed

Attachment: Exhibit E - CIC Construction Group USA - 22-BG-06 Bid Proposal (2023-R-55 : Fire Station Construction)

PO Box 782415 Orlando, FL 32878 | O: 407-930-7775
E: cicfl@cic-pr.com | I: www.cicconstruction.com

CIC Construction GROUP

SUMMARY COMPLETED PROJECTS – OFFICE FLORIDA.

PROJECT DESCRIPTION	OWNER	CONTRACT AMOUNT	COMPLETION DATE
Valencia Osceola Campus Renovation – Bldg. 14 & 14A	Valencia College	$305,580.27	08/2021
Apiject BFS Pilot Facility - Demolition	Integrated Project Services	$97,851.00	11/2021
Port Orleans Resort Pool Modification – Disney's Port Orleans Resort – Riverside	Disney Worldwide Services, Inc	$323,067.00	02/2022
Apiject BFS Pilot Facility – Phase II	Integrated Project Services	$5,775,810.35	03/2023
FY22 Resorts Pool Program Recoating & Resurfacing – Pkg 1 – Walt Disney World Resort	Disney Worldwide Services, Inc	$1,104,671.35	03/2023
Infinity Park – Parcel 1 Retail	Tavistock Development Company	$4,142,058.26	06/2023

Attachment: Exhibit E - CIC Construction Group USA - 22-BG-06 Bid Proposal (2023-R-55 : Fire Station Construction)

PO Box 782415 Orlando, FL 32878 | O: 407-930-7775
E: cicfl@cic-pr.com | I: www.cicconstruction.com

CIC Construction GROUP

SUMMARY COMPLETED PROJECTS LAST 5 YEARS

PROJECT DESCRIPTION	OWNER	CONTRACT AMOUNT	COMPLETION DATE
Sartorius MIP Media Plant Phase II	Sartorius	$ 13,000,000.00	Nov-22
New Modular Clean Room	Sartorius	$ 1,000,000.00	Jun-22
Chewable Project	McNeil (J&J)	$ 7,721,000.00	Dec-22
Bacardi Cogeneration Plant	Bacardi/Sampol	$ 1,400,000.00	Nov-22
Zimmer New Clean Room	Zimmer Biomet	$ 3,051,000.00	Dec-22
Sartorius MIP Media Plant QC & Corridor Lab BP3	Sartorius	$ 4,040,000.00	Nov-22
Econo Warehouse and Distribution Center	Econo Supermarkets	$ 75,000,000.00	Mar-21
Offices Renovations	Valencia College	$ 300,000.00	Mar-21
Hyatt Regency Grand Reserve	Hyatt/Monarch	$ 37,100,000.00	Apr-21
DS-4 Site Enabling Project	Merck/Jacobs	$ 8,700,000.00	Dec-20
Network and Wellness Room Renovations	Orange County Convention Center	$ 565,000.00	Jul-20
Amgen - AML-NGW Program	Amgen	$ 2,527,033.00	Jan-20
PR05 CHP Plant	Lilly	$ 25,307,185.00	Feb-20
Campus Expansion for New Manufacuting Facilities	Sartorius Stedim Biotech	$ 80,000,000.00	Jan-20
Manufacturing Facilities Renovations	TriPharm/Alcami	$ 985,955.00	May-20
Central Utilities and Fermentation Buildings Architectural Package - DAPI US	Novo Nordisk/Fluor	$ 8,166,000.00	Oct-19
St. Regis Resort - Conference Center & Plantation House Construction	BBP Partners, LLC	$ 2,235,068.00	Apr-19
Vistas del Boulevard Condominium	Vistas del Boulevard, LLC	$ 16,000,000.00	Apr-19
Plaza Bairona Office Building Renovation	Caribbean City Builders, Inc.	$ 2,027,000.00	Apr-19
AML-01 Utilities Area New Bump Up	Amgen Mnfctg. Limited	$ 4,296,963.00	Mar-19
Palacio Dorado Condominuim	Palacio Dorado	$ 13,000,000.00	Dec-18
Novartis RM 147 Renovation, Wilson NC	Novartis	$ 179,500.00	Aug-18
Distillation Tower New Access Stair	Bacardi	$ 109,941.00	Jan-16
New Manufacturing Expansion	Warner Chilcott	$ 1,562,003.40	Feb-16
B6 HVAC Improvements-Structural Steel	Pfizer	$ 2,439,006.01	Feb-16
BMS Zone B Single Pot Processor Area	Bristol Myers Squibb	$ 508,714.67	Feb-16
Guanica TD Station	Bayer	$ 6,586,510.66	Mar-16
AML12,8 & 9 Coating of Piperack and Electrical Cable - Cost Plus	Amgen Mnfctg. Limited	$ 756,286.00	Mar-19
Mt. Vn. To Humacao Product Transfer - CSA Work	Bristol Myers Squibb	$ 1,834,314.67	Apr-16
Zone 1 Model Cluster - Four Seasons Cayo Largo	Resort at Cayo Largo, LLC	$ 3,227,854.00	Jan-19
LifeScan - Employee Parking Upgrade	LifeScan	$ 179,052.00	Jun-16
Amgen Staging & Recycling Area	Amgen	$ 201,398.00	Jun-16
New Modular Pipe Rack	Amgen	$ 2,573,943.06	Jul-16
BIOBAC - Anaerobic Digester No.3 Phase II	Bacardi	$ 1,436,247.09	Jul-16
HSJ Hurricane Maria Recovery Work - T&M	Hotel San Juan	$ 3,702,009.57	May-19
Amgen - Conference 324 Modifications	Amgen	$ 348,028.72	Jul-16
Lilly - Generator Project Strutural Steel Package	Lilly	$ 847,592.90	Jul-16

Attachment: Exhibit E - CIC Construction Group USA - 22-BG-06 Bid Proposal (2023-R-55 : Fire Station Construction)

CIC Construction GROUP

SUMMARY COMPLETED PROJECTS LAST 5 YEARS

PROJECT DESCRIPTION	OWNER	CONTRACT AMOUNT	COMPLETION DATE
MMC/Warehouse Projects	Lilly	$ 3,135,233.86	Aug-16
Residential Apartment Building	Galeria Urbana	$ 13,705,127.00	Aug-16
Amgen - Fire Upgrade Work - Rooms 2105, 2106, 2110 & 2102	Amgen/Fluor	$ 309,490.97	Sep-16
Pfizer-Nexium Tablets Demoliton Work	Pfizer	$ 1,549,227.00	Sep-16
Bahia Beach - Ocean Drive Residences	BBP Partners, LLC	$ 18,884,557.40	May-19
Pfizer Guayama - Relocation of Exisitng Utilities	Pfizer	$ 458,869.00	Nov-16
Monsanto - Fencing	Monsanto	$ 1,826,947.99	Jan-17
Lilly - PC99 Civil Construction	Lilly	$ 248,052.00	Feb-17
Syngenta - PRSA Site Investment Project-Rippen	Syngenta Crop Protection, LLC	$ 3,913,728.61	Mar-17
C/S/A Works (FG-02) AML6 Tech Transfer	Amgen/Fluor	$ 4,614,478.31	Mar-17
Fairmont El San Juan Hotel Renovations	El San Juan Resort, LLC	$ 32,940,000.00	May-17
Four Seasons Cayo Largo - Preconstruction Services	Resort at Cayo Largo, LLC	$ 107,690.56	May-17
PR52 38kv Substation	Lilly	$ 2,820,786.00	Jul-17
Hurricane Maria Recovery Work - Plaza Anasco	Caribbean City Builders, Inc.	$ 169,396.00	Nov-17
Hurricane Maria Recovery Work - Pfizer, Barceloneta	Pfizer, Inc.	$ 203,281.58	Nov-17
Hurricane Maria Recovery Work - CMS	Clinical Medical Services	$ 106,525.45	Nov-17
McNeil -Motrin & Ty PM Tech Transfer	Mcneill (J&J)	$ 3,867,007.00	Nov-17
Steel Demoliton Work	Kmart	$ 42,191.22	Dec-17
Abbvie - Synthroid PR14 CP#11 & PC#7	Abbvie	$ 7,623,636.00	Oct-18
Amgen (Fluor) Cyovessels AMG 145 CSA Early Engagement Work at AML-6 Bldg.	Amgen/Fluor	$ 740,915.00	Jun-18
Nordstrom - Hurricane Maria Recovery and Repairs	Nordstrom	$ 2,492,323.03	Aug-18
Amgen - AML-6 Hurrican Maria Recovery Work	Amgen/Fluor	$ 1,932,512.06	Aug-18
Amgen - AML-1 Hurrican Maria Recovery Work	Amgen	$ 2,905,364.99	Aug-18
Lilly - PR30 New Amonia Tank	Lilly	$ 574,500.00	Aug-18
Neuroplasticity and Chemical Synthesis Laboratories and Vivarium Facilities Molecular Sciences Building	University of Puerto Rico	$ 15,700,000.00	Dec-19
St. Jude - New Well Water System	St. Jude Medical	$ 93,156.00	Aug-18
Amgen - AML 14 PSF Filling Line	Amgen	$ 4,425,809.46	Aug-18
Abbvie - PR14 Structural Steel Work	Abbvie	$ 190,700.00	Aug-18
Abbvie Elagolix Arch and Civil Package	Abbvie	$ 181,359.00	Aug-18
AML-01 Structural Upgrade	Amgen	$ 453,283.00	Sep-18
Vistas del Boulevard Condominium	Vistas del Boulevard, LLC	$ 16,065,374.83	Oct-18
Palacio Dorado Condominuim	Palacio Dorado	$ 12,557,033.26	Oct-18
Abbvie-Cogeneration Project CP1	Abbvie	$ 2,490,491.20	Nov-18
J2 Lab Expansion	Janssen Ortho	$ 1,667,866.93	Jul-15
New Manufacturing Facilities Phase I	Romark Laboratories	$ 26,275,874.00	Feb-19
Sol Melia Hotel Hurricane Maria Repair & Renovation Work	Sol Melia Hotel & Resort	$ 20,379,008.38	Dec-18

Attachment: Exhibit E - CIC Construction Group USA - 22-BG-06 Bid Proposal (2023-R-55 : Fire Station Construction)

CIC Construction GROUP

EXHIBIT 3: Resumen

Eng. Edwin Carrasquillo

Eng. Carlos Fonseca

Eng. John Kindred

Attachment: Exhibit E - CIC Construction Group USA - 22-BG-06 Bid Proposal (2023-R-55 : Fire Station Construction)

PO Box 782415 Orlando, FL 32878 | O: 407-930-7775
E: cicfl@cic-pr.com | I: www.cicconstruction.com

CIC Construction GROUP USA, LLC

Academic Background

Bachelor of Science in Civil Engineering—University of Puerto Rico, Mayaguez Campus

License

Florida Certified General Contractor License (CGC 1523162)

Affiliations

Association of Engineers and Land Surveyors of Puerto Rico (CIAPR)

Years of Experience

With CIC: 15
With Other Firms: 16

Edwin Carrasquillo

Executive Director, Florida Office

Edwin has 30 years of comprehensive work experience in construction management for Hotels, Residential, Pharmaceuticals, Industrial and Commercial projects. He has a vast amount of experience overseeing every step of Project execution, Project Management, Cost Control, submittals, RFI's, certifications, payment breakdowns, cash flow projections, bidding process, estimating, quality controls, procurement, subcontractors and self-perform, effective coordination. He achieves timely-scheduled project completion and generates over profits with high Quality finished Product. Edwin also has experience in full Project Logistics and Strategic Planning.

Experience with CIC

Mosquito Control Facility. (Currently). $10.7 million.

Fire Station #39. (Currently). $8.3 million.

Walmart Humacao. Store Expansion Project. $6.3 million

Bard Shannon Limited. New Manufacturing Facility. Humacao, PR—$40 Million
New 223,500 SF building with manufacturing, warehouse, laboratory and offices areas.

Sol Melia Hotels & Resorts. Coco Beach Vacation Club Project. Rio Grande, PR—$55.6 Million
135 Apartment Units in Three 3 Stories Villas Buildings, Administrative Building for Sales and Marketing Offices, VIP Business and Leisure Area, and a new building for a Gym and Retail areas, new pools, and restaurant.

IPR Pharmaceuticals, Inc. Structural Retrofit Project. Carolina, PR—$2.6 Million

Lilly. Carolina, PR

- Humalog Biologics Manufacturing Facilities Project. $32MM
- Humalog Manufacturing Building, Material movement corridor, PC13 Manufacturing Building Expansion, New Waste Water Treatment Plant and Site improvements
- Offices for management, administrative support, IT, laboratory personnel, and Inspectors. Offices areas include meeting rooms, training areas, and server rooms.

Warner Lambert. Process Building. Vega Baja, PR- $1.2 million

IPR Pharmaceuticals. Utilities Building. Guayama, PR—$2.3million

TCI Cable TV. Facilities Expansion. Luquillo, PR—$1 million

Attachment: Exhibit E - CIC Construction Group USA - 22-BG-06 Bid Proposal (2023-R-55 : Fire Station Construction)

CIC Construction
GROUP USA, LLC

Edwin Carrasquillo

Director, Florida Office

Experience with Other Firms

EPS Contractor Group Corp. Florida, US
President. 2014 – Present

- **Local Governments—$1,778,432.00**
  - Orange County Convention Center Conference Rooms Upgrade
  - Orange County Courthouse Network Power Upgrade
  - OC Internal Operation Center HR Renovations
  - OC Presidents Drive OPS Center Retrofit
  - OC Utilities Administration Building Renovations
  - Orange County Sheriff's Office Command Center
  - Orange County Coalition for the Homeless
  - Seminole County Sheriff's Correctional Facility Control Room
  - Seminole County PW Building Retrofit
  - City of Clermont West Beach Restrooms Renovation
  - Winter Haven Senior Center Renovation

- **Federal Works - $168,527.00**
  - Sanford International Airport. Outbound Baggage Improvements
  - FDOT- Turnpike' Turkey Lake Plaza. Offices Renovation

- **Commercial Works - $963,444.00**
  - Melia Hotel Celebration. 360 American Bistro Restaurant Remodel
  - Verizon Financial Headquarters. Cafeteria Remodel. Lake Mary
  - Verizon Headquarters Office Renovations. Lake Mary
  - Valencia West Campus Teaching & Learning Innovation Center
  - Commercial Retail Stores Florida Mall (Footlocker / Hot Topic)

EPS Contractor Corp. Puerto Rico
President. 3 years

- **Walmart PR. $2,665,000.00**
  - Walmart Escorial Remodel (Store #2423)

- **Amigo Supermarkets. $1,308,571.00**
  - Amigo Dorado Remodel (Store #3399)
  - Amigo Corozal Remodel (Store #3688)
  - Amigo Los Paseos Remodel (Store #3683)
  - Amigo Las Catalinas Caguas Remodel (Store #3681)

Attachment: Exhibit E - CIC Construction Group USA - 22-BG-06 Bid Proposal (2023-R-55 : Fire Station Construction)

CIC Construction
GROUP USA, LLC

Edwin Carrasquillo

Director, Florida Office

Experience with Other Firms (Cont.)

- **Miscellaneous Works—$1,184,483.00**
  - ABF Freight System. Offices Remodel. Guaynabo, PR
  - Medtronic Humacao. New Production Rooms & Managers Offices
  - ICPR Jr. College. New Parking Lot Facilities
  - DDR Shopping Centers. Maintenance and Small Construction Projects at Plaza Palma Real, Humacao, Plaza Guayama and Plaza Cayey
  - Gran Melia Hotel Rio Grande, P.R. - Hotel Rooms Preventive Maintenance Plan
  - Ultrafiltration Bldg. –AEE Aguirre Central Plant

Hill Construction Corp. Engineering Manager

- Encantada. Residential Project. Trujillo Alto, PR. $30MM
- Hacienda San Jose. Residential Project. Caguas, PR.$22.2MM
- Urban Train. Concrete Work. $8.9MM

Trainings and Certifications

-Florida Certified General Contractor License (CGC #1523162)
-PR E.I.T. License #16950
-OSHA Construction Safety & Health - 30 Hrs. Cert.#30-600675663
-EPA Storm water Compliance Training (SWPPP) Cert.#477347
-World of Concrete Seminars-Las Vegas
-Excavation Training
-Construction Projects' Accounting
-Rigging Safety Training

Attachment: Exhibit E - CIC Construction Group USA - 22-BG-06 Bid Proposal (2023-R-55 : Fire Station Construction)

CIC Construction GROUP

Academic Background

Bachelor of Science in Civil Engineering—University of Puerto Rico, Mayaguez Campus

Years of Experience

With CIC: 1
With other firms: 20

Carlos Fonseca

Project Manager

CIVIL ENGINEER with 25 + years of experience in General Construction, including multiple phases of Management and administration, Estimating, Costs and Contracts for the construction industry: Commercial & Retails, Industrial, Housing, Multistory Buildings, Pharmaceuticals, Highways and Bridges. Successful in the Completion of Projects within Scope, Time, and Budgets. Highly motivated to Work Independently and Supervision Free. Committed to the implementation of High Standards in Quality and Safety.

Experience with CIC

Mosquito Control Facility. $10.7 million.

Infinity Park – Parcel 1 Retial. $4.1 Millones.

Experience with Other Firms

Qualcon General Contractor | Construction & Estimating Manager | 6 years.

- Project Management and Administration for various Remodeling Projects: "LSP Law Offices", "Blue Diamond Jewelry", "Noble Bank Offices", "Tolomeo Bank Offices", "Fresenius Kidney Care Clinics"
- Bid Estimate & Proposal Preparation
- Project Scheduling Preparation for Construction Projects
- Evaluation and Submittal of Change Orders and Project Claims

EPS Contractor Group, Corp. | Construction Project Manager/Estimating Manager | 1 year.

- Project Management and Administration for: "360 America Bistro" Restaurant Remodel at Melía Hotel, Orlando; "Verizon Cafeteria Remodeling" at Lake Mary, Orlando.
- Bid Estimate & Proposal Preparation
- Project Scheduling Preparation for Construction Projects
- Evaluation and Submittal of Change Orders and Project Claims

Self-Employed Professional Services | Project Management/Construction Inspections | 11 years.

- Professional Services for Construction and Inspection companies:
  o Project Management and Administration for various project working for "EPS Contractor Corp": Amigo Supermarket at Las Catalinas Mall, 38KVa Substation at Centro Medico, Amigo Supermarket at Galeria Paseos, Wal-Mart Store Remodeling at Plaza Escorial.
  - Project Management and Administration working with "ARG Precision Corp." for the PREPA (AEE) Windmill at Bechara (Kennedy Avenue) in San Juan
  - Resident Inspector working with "ACESNOF Group" for the project "Expansion to the General StudiesFaculty" at University of Puerto Rico-Rio Piedras Campus
  - Project Management and Administration working with "FPZ Construction Services" for the project "Casa Del Valle Guest House" at Old San Juan

Attachment: Exhibit E - CIC Construction Group USA - 22-BG-06 Bid Proposal (2023-R-55 : Fire Station Construction)

CIC Construction GROUP

Carlos Fonseca

Project Manager

- Damage Evaluation on personal and commercial properties for Insurance Claims
- Estimate Preparation and Cost Consultant for various General Contractors
- Project Scheduling Preparation for Construction Projects
- Evaluation and Submittal of Change Orders and Project Claims

Las Piedras Construction Co | Project Engineer/Project Controls | 2 years.

- Prepare and Manage CPM's for various projects: "La Plata Cable-Stayed Bridge", "East Corridor (Route 66)", "Abbott Pharmaceuticals in Barceloneta"
- Prepare Project Reports: "Cost-to-Complete", "Man-Hour", Submittals, Monthly Progress
- Safety "Tool-Box" Meetings

Miramar Construction Co. | Chief Estimator and Executive Construction Assistant | 3 years.

- Coordinate, Prepare and Close-out of Estimates for Bid Purposes
- Prepare CPM's for multiple projects
- Prepare Certifications Breakdowns for multiple projects
- Negotiation and Coordination of Contracts with Clients and Subcontractors

Construction Engineering, S.E.| Project Engineer/Estimates & Costs | 2 years.

- Responsible for the Construction Administration of the housing project "San Rafael Estates" in Trujillo
Alto and the retirement complex "Disciples of Christ" in Barceloneta
- Negotiate and Coordinate with Suppliers and Subcontractors
- Prepare CPM's and "Cost-to-Completes"
- Prepare Certifications Breakdowns for various projects
- Preparation of Estimates for Bids.

Miramar Construction Co.| Project Engineer/Chief Estimator/Estimator Engineer | 4 years.

- Responsible for the Construction Administration of the project "Banco Popular" in Montehiedra
(Prototype Branch)
- Negotiate and Coordinate with Suppliers and Subcontractors
- Documents Evaluation and Preparation of Estimates for Bids
- Prepare CPM's and "Cost-to-Completes" for multiple projects
- Prepare Certifications Breakdowns for multiple project

Attachment: Exhibit E - CIC Construction Group USA - 22-BG-06 Bid Proposal (2023-R-55 : Fire Station Construction)

CIC Construction GROUP

John Kindred

Assistant Project Manager

John has 16 years of combined construction experience. As an Assistant Project Manager, he will supervise all field construction activities from design through completion, including monthly project status reports, expediting, and cost control. The Project Manager and John will jointly manage the project, closely monitoring job progress to achieve project milestones and the overall construction schedule, as well as, managing construction quality control and a safe working environment.

Years of Experience

With CIC: 5
With other firms: 11

Experience with CIC

Walt Disney World Resort – Magic Kingdom Park Pinocchio Village Haus Restroom Rehab. $1.6 Millones.

Rose Place Park Playground Replacement. $576, 500.00

East Orange District Park Playground. $504,681.00

Summerlake Neighborhood Park. $1.2 Millones.

Parks Taborfield Neighborhood Park. $1.4 Millones.

Infinity Park – Parcel 1 Retial. $4.1 Millones.

Disney World Resorts, Lake Buena Vista FL $1,035,000.00
Resorts Pool Program Recoating & Resurfacing – Package 1

Disney World Resorts, Lake Buena Vista FL $324,000.00
Port Orleans Resort – Alligator Bayou Pool Resurface & Depth Modification

Valencia College, Kissimmee FL $305,580
Osceola Campus Bldg. 14 & 14A Renovations

Orange County Convention Center, Orlando FL $625,000
Network & Wellness Room Buildouts

Experience with Other Firms

EPS Contractor Group, Corp. | Field Supervisor | 5 years

- Estimates
- Submittals
- Proposal
- Job cost breakdowns
- Sub-contractors Management
- Prepare Schedules
- Field Coordination
- Implement and supervise Field Safety regulations & Procedures
- Contract Management

Attachment: Exhibit E - CIC Construction Group USA - 22-BG-06 Bid Proposal (2023-R-55 : Fire Station Construction)

CIC Construction GROUP

John Kindred

Assistant Project Manager

Experience with Other Firms (Cont.)

Sodexo international | Facilities Manager | 2 years

Reported directly to Oil Industry Manager and Ship Captain, ensuring contract terms were maintained.

- Customer relations services
- Leadership supervision
- Personnel Management
- Equipment
- Supervise system qualitative and quantitative results
- Adjust workload
- Performance monitoring
- Cost control
- Monthly closing for contract
- ISO 9000 Certified Environment
- JSA Protocols

OWNER, BALES PLASTER CO. LLC | Operations Manager | 4 years

- Chamber of Commerce member for Springdale, Rogers, and Fayetteville AR. Home Builders Association
- Developed and grew client list from 1 to 100 at the second year. Expanded service area from local to Tri-State area at 3rd year resulting in increased job sales from 25K to 500K annually.
- Consistently completed all jobs within or ahead of schedule and budget. B2B Job Sales, Contract, Management.
- Experienced Vendor Sales Negotiator
- Build Project Schedules
- Logistics
- Staff screening & Recruitment
- Project Management
- Equipment Purchasing
- Laborer
- Scaffold
- Journeyman Plaster

Attachment: Exhibit E - CIC Construction Group USA - 22-BG-06 Bid Proposal (2023-R-55 : Fire Station Construction)

CIC Construction GROUP

EXHIBIT 4

Bank Reference

Attachment: Exhibit E - CIC Construction Group USA - 22-BG-06 Bid Proposal (2023-R-55 : Fire Station Construction)

PO Box 782415 Orlando, FL 32878 | O: 407-930-7775
E: cicfl@cic-pr.com | I: www.cicconstruction.com

Attachment: Exhibit E - CIC Construction Group USA - 22-BG-06 Bid Proposal (2023-R-55 : Fire Station Construction)

First Bank

June 1, 2023

Mr. Gustavo Hermida
President
CIC Construction Group
State Road #1, Km 23.0
Rio Ward, Guaynabo, PR

Re: CIC Construction Group, SE and CIC Construction Group, LLC (collectively the "Group")

To whom it may concern:

We are pleased to confirm to you that the Group has been an excellent customer of FirstBank (the "Bank") since 2003. The Group currently has revolving credit facilities for an aggregate of $16,000,000 for working capital purposes and $16,000,000 is available for advances.

We feel privileged to do business with the Group and its management team and expect to continue expanding our business relationship.

If additional information is needed, please do not hesitate to contact us at (787) 729-8241 or via email to miguel.santin@firstbankpr.com.

Cordially yours,

Miguel A. Santín
Vice President

BANCO POPULAR

BANCO POPULAR DE PUERTO RICO
PO Box 362708
San Juan, Puerto Rico 00936-2708
Teléfonos (787) 754-9205

August 23, 2023

RE: CIC Construction Group, SE/CIC Construction Group LLC.
ATT: Mr. Gustavo Hermida
President
Road #1, KM 23.0
Barrio Rios
Guaynabo, PR 00726

Serve this letter as our confirmation that CIC Construction Group, S.E. and CIC Construction Group LLC, have available at our bank various line of credit facilities for a total combined amount of $20,000,000.00. At this moment the lines of credit are not used, thus the full amount is available.

Should additional information is needed you can contact us at 787-754-9205 Ext 8507275 or 787-553-6160.

Cordially,

Isabel González
Vice President
Comercial Banking Center-Río Piedras
Río Piedras.
Email: isabel.gonzalez@popular.com

Attachment: Exhibit E - CIC Construction Group USA - 22-BG-06 Bid Proposal (2023-R-55 : Fire Station Construction)

BANCO POPULAR

BANCO POPULAR DE PUERTO RICO
PO Box 362708
San Juan, Puerto Rico 00936-2708
Teléfonos (787) 754-9205

August 23, 2023

RE: CIC Construction Group, SE/CIC Construction Group LLC.
ATT: Mr. Gustavo Hermida
President
Road #1, KM 23.0
Barrio Rios
Guaynabo, PR 00726

Serve this letter as our confirmation that CIC Construction Group, S.E. and CIC Construction Group LLC, have available at our bank various line of credit facilities for a total combined amount of $20,000,000.00. At this moment the lines of credit are not used, thus the full amount is available.

Should additional information is needed you can contact us at 787-754-9205 Ext 8507275 or 787-553-6160.

Cordially,

Isabel González
Vice President
Comercial Banking Center-Río Piedras
Río Piedras.
Email: isabel.gonzalez@popular.com

Attachment: Exhibit E - CIC Construction Group USA - 22-BG-06 Bid Proposal (2023-R-55 : Fire Station Construction)

SECTION *00 33 00*

The Bidder proposes that the following subcontractors are qualified to perform the referenced work and have successfully done so on recent projects similar in nature and size. Upon approval of subcontractors listed the successful bidder shall not substitute subcontractors without approval from the Architect.

SUBCONTRACTOR	COMPANY NAME	REFERENCE
Surveying and Layout	American Layout & Land Surveying LLC	1) THE E&L CONSTRUCTION GROUP Amy Jordan - Phone: (813) 641-4614 2) Kaufman Lynn Construction Josh Kayne - Phone: (561) 361-6700 3) Waypoint Contracting Limreal Blanc - (786) 608-1406 X105
Site Works and Utilities	Betacon LLC	1) EMJ Corporation - Contact : Orland Edmond Phone: (423) 463-2034 2) Ovation Construction - Contact: Bert Karpinski - Phone: (407) 722-4161 3) BCI - Contact: Travis Clements - Phone: (512) 915-9953
Landscape and Irrigation	Verdego Landscape	1) ZEV COHEN & ASSOCIATES, INC Steve M. Glaze - Phone 386-677-2482 2) GAI Consultants, Inc Dewayne Osteen - (904) 437-9811 3)
Fencing	AAA Fence A Division of Fence Service, Inc.	1) City of Ormond Beach - John Fowler- Building Maint (386) 676-3380 2) City of Port Orange Kevin Sweat - (386) 506-5856 3) City of New Smyrna Beach – Sports Complex - David Burgoon - P (386) 410-2883
Concrete Works	Cornerstone Construction Services, Inc	1) The Whiting-Turner Contracting Allison Behringer - (407) 370-4500 2) Turner Construction Company Kristin Ross - (321) 281-7168 3) CCK Construction Services Anthony Colasanti - (407) 472-9700
Masonry	John M. Cicero Masonry Inc.	1) M L Underwood - Contact: Dave - Phone (386) 846-2442 2) Coleman Goodmote Phone (386) 257-3570 3) Enterprise Car Rental - Contact: Kieth - Phone (904) 832-5045

END OF SECTION

Attachment: Exhibit E - CIC Construction Group USA - 22-BG-06 Bid Proposal (2023-R-55 : Fire Station Construction)

SECTION *00 33 00*

The Bidder proposes that the following subcontractors are qualified to perform the referenced work and have successfully done so on recent projects similar in nature and size. Upon approval of subcontractors listed the successful bidder shall not substitute subcontractors without approval from the Architect.

SUBCONTRACTOR	COMPANY NAME	REFERENCE
Steel Structures and Miscellaneous	E&S Steel Corporation	1) Bandes Construction Phone:(727) 733-5558 - Brian 2) Morton Construction Phone: (407) 322-0754 - Kevin 3) PCL Phone: (407) 363-0059 - Corey
Steel Trusses	TruTek	1) Harper GC Phone: (864) 546-7913 2) American Contractors INC Phone: (615) 329-0123 3) Lord & Son Construction Phone: (850) 863-5158
Cabinetry and Millwork	The Deland Woodcrafter	1) AM Weigel - Contact: Dwight Pickett - Phone: (386) 257-6691 2) Williams Company - Contact: Justin Hott - Phone: (407) 295.2530 3) Deacon Design - Contact: Liz Deacon - Phone: (386)615.8899
Roofing and Insulation	Collis Roofing, Inc	1) Jack Jennings & Sons - Jeff Jennings Phone: (407) 948-4880 2) Roger B Kennedy - Clint Curby Phone: (407) 325-5344 3) Stultz Inc - Contact: Jeff Stutz Phone: (239) 590-3033
Overhead Doors	Overhead Door Company of Daytona Beach	1) Building Association Manager's of Volusia, Inc. 2) Volusia Building Industry Association (VBIA) 3) Volusia Manufacturers Association
Doors and Hardwares	Superior Hardware Products	1) MH Williams - Contact: Mike Williams - Phone: (321) 757-5750 2) Cole Contracting - Contact: Yvonne Naese - Phone: (941) 705-1939 3) KVC - Contact: Nathan Crespin Phone: (786) 282-7588

END OF SECTION

Attachment: Exhibit E - CIC Construction Group USA - 22-BG-06 Bid Proposal (2023-R-55 : Fire Station Construction)

SECTION *00 33 00*

The Bidder proposes that the following subcontractors are qualified to perform the referenced work and have successfully done so on recent projects similar in nature and size. Upon approval of subcontractors listed the successful bidder shall not substitute subcontractors without approval from the Architect.

SUBCONTRACTOR	COMPANY NAME	REFERENCE
Storefront and Windows	Alpha Omega Glass and Mirror, LLC	1) To be submit for approval 2) 3)
Flooring and Wall Finishes	Smart Finishes LLC	1) Bay To Bay, Properties LLC. Phone: (727) 483-9512 2) Weekes Construction Inc. Phone: (864) 233-0061 3) Axxys Construction Group. Phone: +1 (514) 388-8080
Framing and Drywall	Drywall Elements	1) PeakCM - Contact: Doug Knox - Phone: (802) 373-3577 2) Charles Perry Partners, Inc. Will Weingart - Phone: (407) 717-7867 3) HGR Construction, Inc. Matt Minter - Phone: 407-335-3728
Painting	Coastal Painting	1) Wharton- Smith, Inc. (407) 321-8410 - David Romero 2) Welbro Building Corporation (407) 475-0800 Darick Bennett 3) Origin Construction Bryce Charleston - Phone: (813) 415-7691
Stucco	Central Florida Construction Walls, Inc	1) To be submit for approval 2) 3)
Specialties	Accurate Metal Doors	1) Moran Construction - Pat Moran - Phone (321) 639-5971 2) Maverick Constructors - Ralph Kennedy - Phone (321)-863-6112 3) Doug Wilson Enterprises - Conrad Wilson - Phone (321) 783-0903

END OF SECTION

Attachment: Exhibit E - CIC Construction Group USA - 22-BG-06 Bid Proposal (2023-R-55 : Fire Station Construction)

SECTION *00 33 00*

The Bidder proposes that the following subcontractors are qualified to perform the referenced work and have successfully done so on recent projects similar in nature and size. Upon approval of subcontractors listed the successful bidder shall not substitute subcontractors without approval from the Architect.

SUBCONTRACTOR	COMPANY NAME	REFERENCE
Plumbing Works	G and W Plumbing, LLC	1) AG Pifer Construction - Phone: (386) 257-4448 2) Hall Construction Phone: (352) 252-2526 3) Perry-McCall Construction, Inc Phone: (904) 292-2645
Mechanical Works	Cor3 Company	1) J. Raymond - Contact: Thomas Lail Phone: (407) 862-6966 2) HGR Construction Inc - Contact: Billy Walton - Phone: (407) 645-4447 3) Tristar Eng. Group - Contact: Juan Pesante - Phone (407)-567-9795
Electrical Works / Lighting Protection / Systems/ Data / Generator	Paul Electric	1) To be submit for approval 2) 3)
Fire Protection Works	Eagle Fire Protection	1) HGR Construction - Matt Minter Phone: (407) 645-4447 2) MARCOBAY Construction - Jimmy Vessels Phone: (863) 680-2293 3) ARCO Murray Construction - Patrick Ford Phone: (407) 908-7300
		1) 2) 3)
		1) 2) 3)

END OF SECTION

Attachment: Exhibit E - CIC Construction Group USA - 22-BG-06 Bid Proposal (2023-R-55 : Fire Station Construction)

SECTION 00 33 10
LISTING OF PREVIOUS EXPERIENCE

The bidder proposes that he/she is qualified to perform the referenced work and has successfully done so on recent projects similar in nature and size. A minimum of three (3) projects must be listed below. The Owner reserves the right to check references and confirm information provided herein.

NO.	PROJECT	OWNER	DESCRIPTION/COST	REFERENCE	DATE WORK STARTED & FINISHED MM/YR TO MM/YR
1	Apiject BFS Pilot Facility - Phase II	IPS Integrated Project Services, LLC	This project involves retrofitting existing 16,450 SF of warehouse space into an F-1 Factory Industrial Suite and Office Areas. The scope included management of sub trades, including concrete works, structural steel, cabinetry, interior doors and hardware, storefronts and windows, finishes works, MEP works, Fire Protection works, Process works, building permitting, inspections, etc. Cost: $5,775,810.35	Dennis Buttke (586) 855-0803 dbuttke@ipsdb .com	Started: May, 2021 Finished: January, 2022
2	Campus Expansion for New Manufacturing Facilities	Sartorius Stedim Biotech	Expanded facility, which added 290,000 SF to the existing industrial/pharmaceutical plant. Scope consisted of the construction of two buildings including sub trade management of site/earthwork, landscaping, concrete works, structural, storefronts, doors, windows, finishes, mechanical, electrical, low-volt, plumbing, and fire protection, permitting, inspections, etc. Cost: $80,000,000.00	Roberto Sanchez (787) 594-2684 roberto.sanchez1 @sartorius.com	Started: June, 2016 Finished: January, 2019

Attachment: Exhibit E - CIC Construction Group USA - 22-BG-06 Bid Proposal (2023-R-55 : Fire Station Construction)

SECTION 00 33 10
LISTING OF PREVIOUS EXPERIENCE

NO.	PROJECT	OWNER	DESCRIPTION/COST	REFERENCE	DATE WORK STARTED & FINISHED MM/YR TO MM/YR
3	Econo New Warehouse and Distribution Center	Econo Supermarkets	General Contractor in the construction of two new buildings for the storage and distribution of products, commercial office building , and support areas. The project occupies an area of 456,000 SF. Scope includes managing various sub trades such as site/earthwork, site utilities, landscaping, storefronts, finishes works, MEP's works, building permitting, inspections, etc. Cost: $74,000,000.00	Glorimar Arocho (939) 216-6900 garocho @superecono.com Eduardo Marxuach (787) 620-9292 emarxuach @superecono.com	Started: September, 2019 Finished: March, 2021

END OF SECTION

Attachment: Exhibit E - CIC Construction Group USA - 22-BG-06 Bid Proposal (2023-R-55 : Fire Station Construction)

SECTION 00 47 00

SWORN STATEMENT UNDER SECTION 287.133(3)(a), FLORIDA STATUTES, ON PUBLIC ENTITY CRIMES:

This sworn statement is submitted with Bid, Proposal **or** Contract No. 22-BG-06 for FIRE STATION CONSTRUCTION.

This sworn statement is submitted by CIC CONSTRUCTION GROUP USA, LLC whose business address is 3361 ROUSE RD, SUITE 135. ORLANDO, FL 32817 and (if applicable) its Federal Employer Identification Number (FEIN) is 66-0856002. (If the entity has no FEIN, include the Social Security Number of the individual signing this sworn statement: _____.)

My name is EDWIN CARRASQUILLO any my relationship to the entity named above is EXECUTIVE DIRECTOR.

I understand that a "public entity crime" as defined in Paragraph 287.133(g), Florida Statutes, means a violation of any state or federal law by a person with respect to and directly related to the transaction of business with any public entity or with an agency or political subdivision of any other state or with the United States, including, but not limited to, any bid or contract for goods or services to be provided to any public entity or an agency or political subdivision of any other state or of the United States and involving antitrust, fraud, theft, bribery, collusion, racketeering, conspiracy, or material misrepresentation.

I understand that "convicted" or "conviction" as defined in Paragraph 287.133(i)(b), Florida Statutes, means a finding of guilt or a conviction of a public entity crime, with or without an adjudication of guilt, in any federal or state trial court of record relating to charges brought by indictment or information after July 1, 1989, as a result of a jury verdict, nonjury trial, or entry of a plea of guilty or nolo contenders.

I understand that an "affiliate" as defined in Paragraph **287.133(l)(a),** Florida Statutes, means:

1. A predecessor or successor of a person convicted of a public entity crime: or

2. An entity under the control of any natural person who is active in the management of the entity and who has been convicted of a public entity crime. The term "affiliate" includes those officers, directors, executives, partners, shareholders, employees, members, and agents who are active in the management of an affiliate. The ownership by one person of shares constituting a controlling interest in another person, or a pooling of equipment or income among persons when not for fair market value under an arm's length agreement,

Attachment: Exhibit E - CIC Construction Group USA - 22-BG-06 Bid Proposal (2023-R-55 : Fire Station Construction)

shall be a prima facie that one person controls another person. A person who knowingly enters into a joint venture with a
person who has been convicted of a public entity crime in Florida during the preceding 36 months shall be considered an affiliate.

I understand that a "person" as defined in Paragraph 287.133(i)(e), Florida Statutes, means any natural person or entity organized under the laws of any state or of the United States with the legal power to enter into a binding contract and which bids or applies to bid on contracts for the provision of goods or services let by a public entity, or which otherwise transacts or applies to transact business with a public entity. The term "person" includes those officers, directors, executives, partners, shareholders, employees, members, and agents who are active in management of an entity.

Based on information and belief, the statement which I have marked below is true in relation to the entity submitting this sworn statement. (Please indicate which statement applies).

__X__ Neither the entity submitting this sworn statement, nor any officers, directors, executives, partners, shareholders, employees, members or agents who are active in management of the entity, nor any affiliate of the entity have been charged with and convicted of a public entity crime subsequent to July 1, 1989.

_____ The entity submitting this sworn statement, or one or more of the officers, directors, executives, partners, shareholders, employees, members, or agents who are active in management of the entity, or an affiliate of the entity has been charged with and convicted of a public entity crime subsequent to July 1, 1989, AND (Please indicate which additional statement applies.)

_____ There has been a proceeding concerning the conviction before a hearing officer of the State of Florida, Division of Administrative Hearings. The final order entered by the hearing officer did not place the person or affiliate on the convicted vendor list. (Please attach a copy of the final order.)

_____ The person or affiliate was placed on the convicted vendor list. There has been a subsequent proceeding before a hearing officer of the State of Florida, Division of Administrative Hearings. The final order entered by the hearing officer determined that it was in the public interest to remove the person or affiliate from the convicted vendor list. (Please attach a copy of the final order).

Attachment: Exhibit E - CIC Construction Group USA - 22-BG-06 Bid Proposal (2023-R-55 : Fire Station Construction)

(Signature) _____ Date: 08/28/2023

State of FLORIDA County of ORANGE

PERSONALLY APPEARED BEFORE ME, the undersigned authority, EDWIN CARRASQUILLO who, after first being sworn by me, affixed his/her signature in the space provided above on this 28 day of AUGUST, 2023.

Notary Public EMELY M. DE LEON

My Commission Expires: 05.06.2026

Notary Public State of Florida
Emely M De Leon
My Commission
HH 242246
Exp. 5/6/2026

PHYSICAL PRESENCE
PERSONALLY KNOWN

Attachment: Exhibit E - CIC Construction Group USA - 22-BG-06 Bid Proposal (2023-R-55 : Fire Station Construction)

SECTION 00 48 00
ANTI-COLLUSION STATEMENT

By signing this form, the bidder agrees that this is made without any other understanding, agreement, or connection with any person, corporation, or firm submitting a proposal for the same purpose and that the proposal is in all respects fair and without collusion or fraud.

SIGN in ink in the space provided below. Unsigned bids will be considered incomplete, and will be disqualified, and rejected.

IT IS AGREED BY THE UNDERSIGNED BIDDER THAT THE SIGNING AND DELIVERY OF THE BID REPRESENTS THE BIDDER'S ACCEPTANCE OF THE TERMS AND CONDITIONS OF THE FORGOING SPECIFICATIONS, CONTRACT AND PROVISIONS, AND IF AWARDED, THIS CONTRACT WILL REPRESENT THE AGREEMENT BETWEEN EACH OF THE GOVERNMENTAL PARTIES.

NAME OF FIRM: CIC CONSTRUCTION GROUP USA, LLC

SIGNED BY: _____ EDWIN CARRASQUILLO
(MUST BE SIGNED BY A COMPANY OFFICER OR AUTHORIZED AGENT)

TITLE: EXECUTIVE DIRECTOR

ADDRESS: 3361 ROUSE RD, SUITE 135

CITY AND STATE: ORLANDO, FL 32817

TELEPHONE: 407-269-5151

COMPLETION TIME: 08/28/2023

NO proposals will be withdrawn for a period of ninety (90) days subsequent to the opening of the proposals, without the consent of the City of Holly Hill.

NO BID (REASON) N/A

END OF SECTION

Attachment: Exhibit E - CIC Construction Group USA - 22-BG-06 Bid Proposal (2023-R-55 : Fire Station Construction)

SECTION 00 48 50
DRUG FREE/TIE PREFERENCE STATEMENT

In the event of a tie bid a preference is given to vendors submitting a certification with their bid/proposal certifying they have a drug-free workplace in accordance with Section 287.087, Florida Statutes. This requirement affects all public entities of the State and becomes effective January 1, 1991. The special conditions are as follow:

IDENTICAL TIE BIDS - Preference shall be given to businesses with drug-free workplace programs. Whenever two or more bids which are equal with respect to price, quality, and service are received by the State or by any political subdivision for the procurement of commodities or contractual services, a bid received from a business that certifies that it has implemented a drugfree workplace program shall be given preference in the award process. Established procedures for processing tie bids will be followed if none of the tied vendors have a drug-free workplace program. In order to have a drug-free workplace program, a business shall:

1. Publish a statement notifying employees that the unlawful manufacture, distribution, dispensing, possession, or use of a controlled substance is prohibited in the workplace and specifying the actions that will be taken against employees for violations of such prohibition.

2. Inform employees about the dangers of drug abuse in the workplace, the business's policy of maintaining a drug-free workplace, any available drug counseling, rehabilitation and employee assistance programs, and the penalties that may be imposed upon employees for drug abuse violations.

3. Give each employee engaged in providing the commodities or contractual services that are under bid a copy of the statement specified in subsection (1).

4. In the statement specified in subsection (1), notify the employees that, as a condition of working on the commodities or contractual services that are under bid, the employee will abide by the terms of the statement and will notify the employer of any conviction or, or plea of guilty or nolo contendere to, any violation of chapter 893 or of any controlled substance law of the United States or any state, for a violation occurring in the workplace no later than five (5) days after such conviction.

5. Impose a sanction on, or require the satisfaction participation in a drug abuse assistance or rehabilitation program if such is available in the employee's community, by any employee who is so convicted.

6. Make a good faith effort to continue to maintain a drug-free workplace through implementation of this section.

As the person authorized to sign the statement, I certify that this firm complies fully with the above requirements.

VENDOR'S SIGNATURE

END OF SECTION

Attachment: Exhibit E - CIC Construction Group USA - 22-BG-06 Bid Proposal (2023-R-55 : Fire Station Construction)

SECTION 00 48 60

COMPLIANCE WITH THE PUBLIC RECORDS LAW

Project Number: ITB # 22-BG-06

Upon award recommendation or ten (10) days after opening, submittals become "public records" and shall be subject to public disclosure consistent with Chapter 119, Florida Statutes. Proposers must invoke the exemptions to disclosure provided by law in the response to the solicitation, and must identify the data or other materials to be protected, and must state the reasons why such exclusion from public disclosure is necessary. The submission of a proposal authorizes release of your firm's credit data to the CITY.

If the company submits information exempt from public disclosure, the company must identify with specificity which pages/paragraphs of their bid/proposal package are exempt from the Public Records Act, identifying the specific exemption section that applies to each. The protected information must be submitted to the CITY in a separate envelope marked accordingly.

IF THE CONTRACTOR HAS QUESTIONS REGARDING THE APPLICATION OF CHAPTER 119, FLORIDA STATUTES, TO THE CONTRACTOR'S DUTY TO PROVIDE PUBLIC RECORDS RELATING TO THIS CONTRACT, CONTACT THE CUSTODIAN OF PUBLIC RECORDS AT

Valerie Manning, City Clerk
386-248-9441
vmanning@hollyhillfl.org
1065 Ridgewood Ave
Holly Hill, FL 32117

A provision that requires the contractor to comply with public records laws, specifically to:

1. Keep and maintain public records required by the public agency to perform the service.
2. Upon request from the public agency's custodian of public records, provide the public agency with a copy of the requested records or allow the records to be inspected or copied within a reasonable time at a cost that does not exceed the cost provided in this chapter or as otherwise provided by law.
3. Ensure that public records that are exempt or confidential and exempt from public records disclosure requirements are not disclosed except as authorized by law for the duration of the contract term and following completion of the contract if the contractor does not transfer the records to the public agency.
4. Upon completion of the contract, transfer, at no cost, to the public agency all public records in possession of the contractor or keep and maintain public records required by the public agency to perform the service. If the contractor transfers all public records to the public agency upon completion of the contract, the contractor shall destroy any duplicate public records that are exempt or confidential and exempt from public records disclosure requirements. If the contractor keeps and maintains public records upon completion of the contract, the contractor shall meet all applicable requirements for retaining public records. All records stored electronically must be provided to the public agency, upon request from the public agency's custodian of public records, in a format that is compatible with the information technology systems of the public agency.

By submitting a response to this solicitation, the company agrees to defend the CITY in the event we are forced to litigate the public records status of the company's documents.

Company Name: CIC CONSTRUCTION GROUP USA, LLC

Authorized representative (printed): EDWIN CARRASQUILLO

Authorized representative (signature): 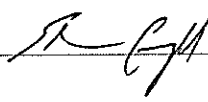

Date: 08/28/2023

END OF SECTION

Attachment: Exhibit E - CIC Construction Group USA - 22-BG-06 Bid Proposal (2023-R-55 : Fire Station Construction)

Form **W-9**
(Rev. October 2018)
Department of the Treasury
Internal Revenue Service

Request for Taxpayer Identification Number and Certification

▶ Go to *www.irs.gov/FormW9* for instructions and the latest information.

Give Form to the requester. Do not send to the IRS.

Print or type. See Specific Instructions on page 3.

1 Name (as shown on your income tax return). Name is required on this line; do not leave this line blank.
CIC CONSTRUCTION GROUP USA, LLC

2 Business name/disregarded entity name, if different from above

3 Check appropriate box for federal tax classification of the person whose name is entered on line 1. Check only one of the following seven boxes.

☐ Individual/sole proprietor or single-member LLC ☐ C Corporation ☐ S Corporation ☐ Partnership ☐ Trust/estate

☑ Limited liability company. Enter the tax classification (C=C corporation, S=S corporation, P=Partnership) ▶ C

Note: Check the appropriate box in the line above for the tax classification of the single-member owner. Do not check LLC if the LLC is classified as a single-member LLC that is disregarded from the owner unless the owner of the LLC is another LLC that is **not** disregarded from the owner for U.S. federal tax purposes. Otherwise, a single-member LLC that is disregarded from the owner should check the appropriate box for the tax classification of its owner.

☐ Other (see instructions) ▶

4 Exemptions (codes apply only to certain entities, not individuals; see instructions on page 3):

Exempt payee code (if any) _____

Exemption from FATCA reporting code (if any) _____

(Applies to accounts maintained outside the U.S.)

5 Address (number, street, and apt. or suite no.) See instructions.
3361 ROUSE ROAD, SUITE 135

Requester's name and address (optional)

6 City, state, and ZIP code
ORLANDO, FL 32817

7 List account number(s) here (optional)

Part I Taxpayer Identification Number (TIN)

Enter your TIN in the appropriate box. The TIN provided must match the name given on line 1 to avoid backup withholding. For individuals, this is generally your social security number (SSN). However, for a resident alien, sole proprietor, or disregarded entity, see the instructions for Part I, later. For other entities, it is your employer identification number (EIN). If you do not have a number, see *How to get a TIN*, later.

Note: If the account is in more than one name, see the instructions for line 1. Also see *What Name and Number To Give the Requester* for guidelines on whose number to enter.

Social security number
			–			–				

or

Employer identification number
6	6	–	0	8	5	6	0	0	2

Part II Certification

Under penalties of perjury, I certify that:

1. The number shown on this form is my correct taxpayer identification number (or I am waiting for a number to be issued to me); and
2. I am not subject to backup withholding because: (a) I am exempt from backup withholding, or (b) I have not been notified by the Internal Revenue Service (IRS) that I am subject to backup withholding as a result of a failure to report all interest or dividends, or (c) the IRS has notified me that I am no longer subject to backup withholding; and
3. I am a U.S. citizen or other U.S. person (defined below); and
4. The FATCA code(s) entered on this form (if any) indicating that I am exempt from FATCA reporting is correct.

Certification instructions. You must cross out item 2 above if you have been notified by the IRS that you are currently subject to backup withholding because you have failed to report all interest and dividends on your tax return. For real estate transactions, item 2 does not apply. For mortgage interest paid, acquisition or abandonment of secured property, cancellation of debt, contributions to an individual retirement arrangement (IRA), and generally, payments other than interest and dividends, you are not required to sign the certification, but you must provide your correct TIN. See the instructions for Part II, later.

Sign Here Signature of U.S. person ▶ [signature] Date ▶ 8/28/23

General Instructions

Section references are to the Internal Revenue Code unless otherwise noted.

Future developments. For the latest information about developments related to Form W-9 and its instructions, such as legislation enacted after they were published, go to *www.irs.gov/FormW9.*

Purpose of Form

An individual or entity (Form W-9 requester) who is required to file an information return with the IRS must obtain your correct taxpayer identification number (TIN) which may be your social security number (SSN), individual taxpayer identification number (ITIN), adoption taxpayer identification number (ATIN), or employer identification number (EIN), to report on an information return the amount paid to you, or other amount reportable on an information return. Examples of information returns include, but are not limited to, the following.

- Form 1099-INT (interest earned or paid)
- Form 1099-DIV (dividends, including those from stocks or mutual funds)
- Form 1099-MISC (various types of income, prizes, awards, or gross proceeds)
- Form 1099-B (stock or mutual fund sales and certain other transactions by brokers)
- Form 1099-S (proceeds from real estate transactions)
- Form 1099-K (merchant card and third party network transactions)
- Form 1098 (home mortgage interest), 1098-E (student loan interest), 1098-T (tuition)
- Form 1099-C (canceled debt)
- Form 1099-A (acquisition or abandonment of secured property)

Use Form W-9 only if you are a U.S. person (including a resident alien), to provide your correct TIN.

If you do not return Form W-9 to the requester with a TIN, you might be subject to backup withholding. See What is backup withholding, *later.*

Attachment: Exhibit E - CIC Construction Group USA - 22-BG-06 Bid Proposal (2023-R-55 : Fire Station Construction)

By signing the filled-out form, you:

1. Certify that the TIN you are giving is correct (or you are waiting for a number to be issued),

2. Certify that you are not subject to backup withholding, or

3. Claim exemption from backup withholding if you are a U.S. exempt payee. If applicable, you are also certifying that as a U.S. person, your allocable share of any partnership income from a U.S. trade or business is not subject to the withholding tax on foreign partners' share of effectively connected income, and

4. Certify that FATCA code(s) entered on this form (if any) indicating that you are exempt from the FATCA reporting, is correct. See *What is FATCA reporting,* later, for further information.

Note: If you are a U.S. person and a requester gives you a form other than Form W-9 to request your TIN, you must use the requester's form if it is substantially similar to this Form W-9.

Definition of a U.S. person. For federal tax purposes, you are considered a U.S. person if you are:

- An individual who is a U.S. citizen or U.S. resident alien;
- A partnership, corporation, company, or association created or organized in the United States or under the laws of the United States;
- An estate (other than a foreign estate); or
- A domestic trust (as defined in Regulations section 301.7701-7).

Special rules for partnerships. Partnerships that conduct a trade or business in the United States are generally required to pay a withholding tax under section 1446 on any foreign partners' share of effectively connected taxable income from such business. Further, in certain cases where a Form W-9 has not been received, the rules under section 1446 require a partnership to presume that a partner is a foreign person, and pay the section 1446 withholding tax. Therefore, if you are a U.S. person that is a partner in a partnership conducting a trade or business in the United States, provide Form W-9 to the partnership to establish your U.S. status and avoid section 1446 withholding on your share of partnership income.

In the cases below, the following person must give Form W-9 to the partnership for purposes of establishing its U.S. status and avoiding withholding on its allocable share of net income from the partnership conducting a trade or business in the United States.

- In the case of a disregarded entity with a U.S. owner, the U.S. owner of the disregarded entity and not the entity;
- In the case of a grantor trust with a U.S. grantor or other U.S. owner, generally, the U.S. grantor or other U.S. owner of the grantor trust and not the trust; and
- In the case of a U.S. trust (other than a grantor trust), the U.S. trust (other than a grantor trust) and not the beneficiaries of the trust.

Foreign person. If you are a foreign person or the U.S. branch of a foreign bank that has elected to be treated as a U.S. person, do not use Form W-9. Instead, use the appropriate Form W-8 or Form 8233 (see Pub. 515, Withholding of Tax on Nonresident Aliens and Foreign Entities).

Nonresident alien who becomes a resident alien. Generally, only a nonresident alien individual may use the terms of a tax treaty to reduce or eliminate U.S. tax on certain types of income. However, most tax treaties contain a provision known as a "saving clause." Exceptions specified in the saving clause may permit an exemption from tax to continue for certain types of income even after the payee has otherwise become a U.S. resident alien for tax purposes.

If you are a U.S. resident alien who is relying on an exception contained in the saving clause of a tax treaty to claim an exemption from U.S. tax on certain types of income, you must attach a statement to Form W-9 that specifies the following five items.

1. The treaty country. Generally, this must be the same treaty under which you claimed exemption from tax as a nonresident alien.

2. The treaty article addressing the income.

3. The article number (or location) in the tax treaty that contains the saving clause and its exceptions.

4. The type and amount of income that qualifies for the exemption from tax.

5. Sufficient facts to justify the exemption from tax under the terms of the treaty article.

Example. Article 20 of the U.S.-China income tax treaty allows an exemption from tax for scholarship income received by a Chinese student temporarily present in the United States. Under U.S. law, this student will become a resident alien for tax purposes if his or her stay in the United States exceeds 5 calendar years. However, paragraph 2 of the first Protocol to the U.S.-China treaty (dated April 30, 1984) allows the provisions of Article 20 to continue to apply even after the Chinese student becomes a resident alien of the United States. A Chinese student who qualifies for this exception (under paragraph 2 of the first protocol) and is relying on this exception to claim an exemption from tax on his or her scholarship or fellowship income would attach to Form W-9 a statement that includes the information described above to support that exemption.

If you are a nonresident alien or a foreign entity, give the requester the appropriate completed Form W-8 or Form 8233.

Backup Withholding

What is backup withholding? Persons making certain payments to you must under certain conditions withhold and pay to the IRS 24% of such payments. This is called "backup withholding." Payments that may be subject to backup withholding include interest, tax-exempt interest, dividends, broker and barter exchange transactions, rents, royalties, nonemployee pay, payments made in settlement of payment card and third party network transactions, and certain payments from fishing boat operators. Real estate transactions are not subject to backup withholding.

You will not be subject to backup withholding on payments you receive if you give the requester your correct TIN, make the proper certifications, and report all your taxable interest and dividends on your tax return.

Payments you receive will be subject to backup withholding if:

1. You do not furnish your TIN to the requester,

2. You do not certify your TIN when required (see the instructions for Part II for details),

3. The IRS tells the requester that you furnished an incorrect TIN,

4. The IRS tells you that you are subject to backup withholding because you did not report all your interest and dividends on your tax return (for reportable interest and dividends only), or

5. You do not certify to the requester that you are not subject to backup withholding under 4 above (for reportable interest and dividend accounts opened after 1983 only).

Certain payees and payments are exempt from backup withholding. See *Exempt payee code,* later, and the separate Instructions for the Requester of Form W-9 for more information.

Also see *Special rules for partnerships,* earlier.

What is FATCA Reporting?

The Foreign Account Tax Compliance Act (FATCA) requires a participating foreign financial institution to report all United States account holders that are specified United States persons. Certain payees are exempt from FATCA reporting. See *Exemption from FATCA reporting code,* later, and the Instructions for the Requester of Form W-9 for more information.

Updating Your Information

You must provide updated information to any person to whom you claimed to be an exempt payee if you are no longer an exempt payee and anticipate receiving reportable payments in the future from this person. For example, you may need to provide updated information if you are a C corporation that elects to be an S corporation, or if you no longer are tax exempt. In addition, you must furnish a new Form W-9 if the name or TIN changes for the account; for example, if the grantor of a grantor trust dies.

Penalties

Failure to furnish TIN. If you fail to furnish your correct TIN to a requester, you are subject to a penalty of $50 for each such failure unless your failure is due to reasonable cause and not to willful neglect.

Civil penalty for false information with respect to withholding. If you make a false statement with no reasonable basis that results in no backup withholding, you are subject to a $500 penalty.

Attachment: Exhibit E - CIC Construction Group USA - 22-BG-06 Bid Proposal (2023-R-55 : Fire Station Construction)

Criminal penalty for falsifying information. Willfully falsifying certifications or affirmations may subject you to criminal penalties including fines and/or imprisonment.

Misuse of TINs. If the requester discloses or uses TINs in violation of federal law, the requester may be subject to civil and criminal penalties.

Specific Instructions

Line 1

You must enter one of the following on this line; **do not** leave this line blank. The name should match the name on your tax return.

If this Form W-9 is for a joint account (other than an account maintained by a foreign financial institution (FFI)), list first, and then circle, the name of the person or entity whose number you entered in Part I of Form W-9. If you are providing Form W-9 to an FFI to document a joint account, each holder of the account that is a U.S. person must provide a Form W-9.

a. **Individual.** Generally, enter the name shown on your tax return. If you have changed your last name without informing the Social Security Administration (SSA) of the name change, enter your first name, the last name as shown on your social security card, and your new last name.

Note: ITIN applicant: Enter your individual name as it was entered on your Form W-7 application, line 1a. This should also be the same as the name you entered on the Form 1040/1040A/1040EZ you filed with your application.

b. **Sole proprietor or single-member LLC.** Enter your individual name as shown on your 1040/1040A/1040EZ on line 1. You may enter your business, trade, or "doing business as" (DBA) name on line 2.

c. **Partnership, LLC that is not a single-member LLC, C corporation, or S corporation.** Enter the entity's name as shown on the entity's tax return on line 1 and any business, trade, or DBA name on line 2.

d. **Other entities.** Enter your name as shown on required U.S. federal tax documents on line 1. This name should match the name shown on the charter or other legal document creating the entity. You may enter any business, trade, or DBA name on line 2.

e. **Disregarded entity.** For U.S. federal tax purposes, an entity that is disregarded as an entity separate from its owner is treated as a "disregarded entity." See Regulations section 301.7701-2(c)(2)(iii). Enter the owner's name on line 1. The name of the entity entered on line 1 should never be a disregarded entity. The name on line 1 should be the name shown on the income tax return on which the income should be reported. For example, if a foreign LLC that is treated as a disregarded entity for U.S. federal tax purposes has a single owner that is a U.S. person, the U.S. owner's name is required to be provided on line 1. If the direct owner of the entity is also a disregarded entity, enter the first owner that is not disregarded for federal tax purposes. Enter the disregarded entity's name on line 2, "Business name/disregarded entity name." If the owner of the disregarded entity is a foreign person, the owner must complete an appropriate Form W-8 instead of a Form W-9. This is the case even if the foreign person has a U.S. TIN.

Line 2

If you have a business name, trade name, DBA name, or disregarded entity name, you may enter it on line 2.

Line 3

Check the appropriate box on line 3 for the U.S. federal tax classification of the person whose name is entered on line 1. Check only one box on line 3.

IF the entity/person on line 1 is a(n) . . .	THEN check the box for . . .
• Corporation	Corporation
• Individual • Sole proprietorship, or • Single-member limited liability company (LLC) owned by an individual and disregarded for U.S. federal tax purposes.	Individual/sole proprietor or single-member LLC
• LLC treated as a partnership for U.S. federal tax purposes, • LLC that has filed Form 8832 or 2553 to be taxed as a corporation, or • LLC that is disregarded as an entity separate from its owner but the owner is another LLC that is not disregarded for U.S. federal tax purposes.	Limited liability company and enter the appropriate tax classification. (P= Partnership; C= C corporation; or S= S corporation)
• Partnership	Partnership
• Trust/estate	Trust/estate

Line 4, Exemptions

If you are exempt from backup withholding and/or FATCA reporting, enter in the appropriate space on line 4 any code(s) that may apply to you.

Exempt payee code.

- Generally, individuals (including sole proprietors) are not exempt from backup withholding.
- Except as provided below, corporations are exempt from backup withholding for certain payments, including interest and dividends.
- Corporations are not exempt from backup withholding for payments made in settlement of payment card or third party network transactions.
- Corporations are not exempt from backup withholding with respect to attorneys' fees or gross proceeds paid to attorneys, and corporations that provide medical or health care services are not exempt with respect to payments reportable on Form 1099-MISC.

The following codes identify payees that are exempt from backup withholding. Enter the appropriate code in the space in line 4.

1—An organization exempt from tax under section 501(a), any IRA, or a custodial account under section 403(b)(7) if the account satisfies the requirements of section 401(f)(2)

2—The United States or any of its agencies or instrumentalities

3—A state, the District of Columbia, a U.S. commonwealth or possession, or any of their political subdivisions or instrumentalities

4—A foreign government or any of its political subdivisions, agencies, or instrumentalities

5—A corporation

6—A dealer in securities or commodities required to register in the United States, the District of Columbia, or a U.S. commonwealth or possession

7—A futures commission merchant registered with the Commodity Futures Trading Commission

8—A real estate investment trust

9—An entity registered at all times during the tax year under the Investment Company Act of 1940

10—A common trust fund operated by a bank under section 584(a)

11—A financial institution

12—A middleman known in the investment community as a nominee or custodian

13—A trust exempt from tax under section 664 or described in section 4947

Attachment: Exhibit E - CIC Construction Group USA - 22-BG-06 Bid Proposal (2023-R-55 : Fire Station Construction)

The following chart shows types of payments that may be exempt from backup withholding. The chart applies to the exempt payees listed above, 1 through 13.

IF the payment is for . . .	THEN the payment is exempt for . . .
Interest and dividend payments	All exempt payees except for 7
Broker transactions	Exempt payees 1 through 4 and 6 through 11 and all C corporations. S corporations must not enter an exempt payee code because they are exempt only for sales of noncovered securities acquired prior to 2012.
Barter exchange transactions and patronage dividends	Exempt payees 1 through 4
Payments over $600 required to be reported and direct sales over $5,000[1]	Generally, exempt payees 1 through 5[2]
Payments made in settlement of payment card or third party network transactions	Exempt payees 1 through 4

[1] See Form 1099-MISC, Miscellaneous Income, and its instructions.

[2] However, the following payments made to a corporation and reportable on Form 1099-MISC are not exempt from backup withholding: medical and health care payments, attorneys' fees, gross proceeds paid to an attorney reportable under section 6045(f), and payments for services paid by a federal executive agency.

Exemption from FATCA reporting code. The following codes identify payees that are exempt from reporting under FATCA. These codes apply to persons submitting this form for accounts maintained outside of the United States by certain foreign financial institutions. Therefore, if you are only submitting this form for an account you hold in the United States, you may leave this field blank. Consult with the person requesting this form if you are uncertain if the financial institution is subject to these requirements. A requester may indicate that a code is not required by providing you with a Form W-9 with "Not Applicable" (or any similar indication) written or printed on the line for a FATCA exemption code.

A—An organization exempt from tax under section 501(a) or any individual retirement plan as defined in section 7701(a)(37)

B—The United States or any of its agencies or instrumentalities

C—A state, the District of Columbia, a U.S. commonwealth or possession, or any of their political subdivisions or instrumentalities

D—A corporation the stock of which is regularly traded on one or more established securities markets, as described in Regulations section 1.1472-1(c)(1)(i)

E—A corporation that is a member of the same expanded affiliated group as a corporation described in Regulations section 1.1472-1(c)(1)(i)

F—A dealer in securities, commodities, or derivative financial instruments (including notional principal contracts, futures, forwards, and options) that is registered as such under the laws of the United States or any state

G—A real estate investment trust

H—A regulated investment company as defined in section 851 or an entity registered at all times during the tax year under the Investment Company Act of 1940

I—A common trust fund as defined in section 584(a)

J—A bank as defined in section 581

K—A broker

L—A trust exempt from tax under section 664 or described in section 4947(a)(1)

M—A tax exempt trust under a section 403(b) plan or section 457(g) plan

Note: You may wish to consult with the financial institution requesting this form to determine whether the FATCA code and/or exempt payee code should be completed.

Line 5

Enter your address (number, street, and apartment or suite number). This is where the requester of this Form W-9 will mail your information returns. If this address differs from the one the requester already has on file, write NEW at the top. If a new address is provided, there is still a chance the old address will be used until the payor changes your address in their records.

Line 6

Enter your city, state, and ZIP code.

Part I. Taxpayer Identification Number (TIN)

Enter your TIN in the appropriate box. If you are a resident alien and you do not have and are not eligible to get an SSN, your TIN is your IRS individual taxpayer identification number (ITIN). Enter it in the social security number box. If you do not have an ITIN, see *How to get a TIN* below.

If you are a sole proprietor and you have an EIN, you may enter either your SSN or EIN.

If you are a single-member LLC that is disregarded as an entity separate from its owner, enter the owner's SSN (or EIN, if the owner has one). Do not enter the disregarded entity's EIN. If the LLC is classified as a corporation or partnership, enter the entity's EIN.

Note: See *What Name and Number To Give the Requester,* later, for further clarification of name and TIN combinations.

How to get a TIN. If you do not have a TIN, apply for one immediately. To apply for an SSN, get Form SS-5, Application for a Social Security Card, from your local SSA office or get this form online at *www.SSA.gov*. You may also get this form by calling 1-800-772-1213. Use Form W-7, Application for IRS Individual Taxpayer Identification Number, to apply for an ITIN, or Form SS-4, Application for Employer Identification Number, to apply for an EIN. You can apply for an EIN online by accessing the IRS website at *www.irs.gov/Businesses* and clicking on Employer Identification Number (EIN) under Starting a Business. Go to *www.irs.gov/Forms* to view, download, or print Form W-7 and/or Form SS-4. Or, you can go to *www.irs.gov/OrderForms* to place an order and have Form W-7 and/or SS-4 mailed to you within 10 business days.

If you are asked to complete Form W-9 but do not have a TIN, apply for a TIN and write "Applied For" in the space for the TIN, sign and date the form, and give it to the requester. For interest and dividend payments, and certain payments made with respect to readily tradable instruments, generally you will have 60 days to get a TIN and give it to the requester before you are subject to backup withholding on payments. The 60-day rule does not apply to other types of payments. You will be subject to backup withholding on all such payments until you provide your TIN to the requester.

Note: Entering "Applied For" means that you have already applied for a TIN or that you intend to apply for one soon.

Caution: A disregarded U.S. entity that has a foreign owner must use the appropriate Form W-8.

Part II. Certification

To establish to the withholding agent that you are a U.S. person, or resident alien, sign Form W-9. You may be requested to sign by the withholding agent even if item 1, 4, or 5 below indicates otherwise.

For a joint account, only the person whose TIN is shown in Part I should sign (when required). In the case of a disregarded entity, the person identified on line 1 must sign. Exempt payees, see *Exempt payee code*, earlier.

Signature requirements. Complete the certification as indicated in items 1 through 5 below.

Attachment: Exhibit E - CIC Construction Group USA - 22-BG-06 Bid Proposal (2023-R-55 : Fire Station Construction)

1. Interest, dividend, and barter exchange accounts opened before 1984 and broker accounts considered active during 1983. You must give your correct TIN, but you do not have to sign the certification.

2. Interest, dividend, broker, and barter exchange accounts opened after 1983 and broker accounts considered inactive during 1983. You must sign the certification or backup withholding will apply. If you are subject to backup withholding and you are merely providing your correct TIN to the requester, you must cross out item 2 in the certification before signing the form.

3. Real estate transactions. You must sign the certification. You may cross out item 2 of the certification.

4. Other payments. You must give your correct TIN, but you do not have to sign the certification unless you have been notified that you have previously given an incorrect TIN. "Other payments" include payments made in the course of the requester's trade or business for rents, royalties, goods (other than bills for merchandise), medical and health care services (including payments to corporations), payments to a nonemployee for services, payments made in settlement of payment card and third party network transactions, payments to certain fishing boat crew members and fishermen, and gross proceeds paid to attorneys (including payments to corporations).

5. Mortgage interest paid by you, acquisition or abandonment of secured property, cancellation of debt, qualified tuition program payments (under section 529), ABLE accounts (under section 529A), IRA, Coverdell ESA, Archer MSA or HSA contributions or distributions, and pension distributions. You must give your correct TIN, but you do not have to sign the certification.

What Name and Number To Give the Requester

For this type of account:	Give name and SSN of:
1. Individual	The individual
2. Two or more individuals (joint account) other than an account maintained by an FFI	The actual owner of the account or, if combined funds, the first individual on the account[1]
3. Two or more U.S. persons (joint account maintained by an FFI)	Each holder of the account
4. Custodial account of a minor (Uniform Gift to Minors Act)	The minor[2]
5. a. The usual revocable savings trust (grantor is also trustee) b. So-called trust account that is not a legal or valid trust under state law	The grantor-trustee[1] The actual owner[1]
6. Sole proprietorship or disregarded entity owned by an individual	The owner[3]
7. Grantor trust filing under Optional Form 1099 Filing Method 1 (see Regulations section 1.671-4(b)(2)(i)(A))	The grantor*
For this type of account:	**Give name and EIN of:**
8. Disregarded entity not owned by an individual	The owner
9. A valid trust, estate, or pension trust	Legal entity[4]
10. Corporation or LLC electing corporate status on Form 8832 or Form 2553	The corporation
11. Association, club, religious, charitable, educational, or other tax-exempt organization	The organization
12. Partnership or multi-member LLC	The partnership
13. A broker or registered nominee	The broker or nominee
14. Account with the Department of Agriculture in the name of a public entity (such as a state or local government, school district, or prison) that receives agricultural program payments	The public entity
15. Grantor trust filing under the Form 1041 Filing Method or the Optional Form 1099 Filing Method 2 (see Regulations section 1.671-4(b)(2)(i)(B))	The trust

[1] List first and circle the name of the person whose number you furnish. If only one person on a joint account has an SSN, that person's number must be furnished.

[2] Circle the minor's name and furnish the minor's SSN.

[3] You must show your individual name and you may also enter your business or DBA name on the "Business name/disregarded entity" name line. You may use either your SSN or EIN (if you have one), but the IRS encourages you to use your SSN.

[4] List first and circle the name of the trust, estate, or pension trust. (Do not furnish the TIN of the personal representative or trustee unless the legal entity itself is not designated in the account title.) Also see *Special rules for partnerships,* earlier.

***Note:** The grantor also must provide a Form W-9 to trustee of trust.

Note: If no name is circled when more than one name is listed, the number will be considered to be that of the first name listed.

Secure Your Tax Records From Identity Theft

Identity theft occurs when someone uses your personal information such as your name, SSN, or other identifying information, without your permission, to commit fraud or other crimes. An identity thief may use your SSN to get a job or may file a tax return using your SSN to receive a refund.

To reduce your risk:

- Protect your SSN,
- Ensure your employer is protecting your SSN, and
- Be careful when choosing a tax preparer.

If your tax records are affected by identity theft and you receive a notice from the IRS, respond right away to the name and phone number printed on the IRS notice or letter.

If your tax records are not currently affected by identity theft but you think you are at risk due to a lost or stolen purse or wallet, questionable credit card activity or credit report, contact the IRS Identity Theft Hotline at 1-800-908-4490 or submit Form 14039.

For more information, see Pub. 5027, Identity Theft Information for Taxpayers.

Victims of identity theft who are experiencing economic harm or a systemic problem, or are seeking help in resolving tax problems that have not been resolved through normal channels, may be eligible for Taxpayer Advocate Service (TAS) assistance. You can reach TAS by calling the TAS toll-free case intake line at 1-877-777-4778 or TTY/TDD 1-800-829-4059.

Protect yourself from suspicious emails or phishing schemes. Phishing is the creation and use of email and websites designed to mimic legitimate business emails and websites. The most common act is sending an email to a user falsely claiming to be an established legitimate enterprise in an attempt to scam the user into surrendering private information that will be used for identity theft.

Attachment: Exhibit E - CIC Construction Group USA - 22-BG-06 Bid Proposal (2023-R-55 : Fire Station Construction)

The IRS does not initiate contacts with taxpayers via emails. Also, the IRS does not request personal detailed information through email or ask taxpayers for the PIN numbers, passwords, or similar secret access information for their credit card, bank, or other financial accounts.

If you receive an unsolicited email claiming to be from the IRS, forward this message to *phishing@irs.gov*. You may also report misuse of the IRS name, logo, or other IRS property to the Treasury Inspector General for Tax Administration (TIGTA) at 1-800-366-4484. You can forward suspicious emails to the Federal Trade Commission at *spam@uce.gov* or report them at *www.ftc.gov/complaint*. You can contact the FTC at *www.ftc.gov/idtheft* or 877-IDTHEFT (877-438-4338). If you have been the victim of identity theft, see *www.IdentityTheft.gov* and Pub. 5027.

Visit *www.irs.gov/IdentityTheft* to learn more about identity theft and how to reduce your risk.

Privacy Act Notice

Section 6109 of the Internal Revenue Code requires you to provide your correct TIN to persons (including federal agencies) who are required to file information returns with the IRS to report interest, dividends, or certain other income paid to you; mortgage interest you paid; the acquisition or abandonment of secured property; the cancellation of debt; or contributions you made to an IRA, Archer MSA, or HSA. The person collecting this form uses the information on the form to file information returns with the IRS, reporting the above information. Routine uses of this information include giving it to the Department of Justice for civil and criminal litigation and to cities, states, the District of Columbia, and U.S. commonwealths and possessions for use in administering their laws. The information also may be disclosed to other countries under a treaty, to federal and state agencies to enforce civil and criminal laws, or to federal law enforcement and intelligence agencies to combat terrorism. You must provide your TIN whether or not you are required to file a tax return. Under section 3406, payers must generally withhold a percentage of taxable interest, dividend, and certain other payments to a payee who does not give a TIN to the payer. Certain penalties may also apply for providing false or fraudulent information.

Attachment: Exhibit E - CIC Construction Group USA - 22-BG-06 Bid Proposal (2023-R-55 : Fire Station Construction)

SECTION 00 48 80

E-VERIFY COMPLIANCE

Affidavit of E-Verify Requirements
Compliance

ITB 22-BG-06

The Consultant/Contractor agrees to comply with Section 448.093, Florida Statutes, and to incorporate in all subcontracts the obligation to comply with Section 448.093, Florida Statutes.

1. The Consultant/Contractor shall utilize the U.S. Department of Homeland Security's E-Verify system to verify the employment eligibility of all new employees hired by the Consultant/Contractor during the term of the Agreement and shall expressly require any subcontractors performing work or providing services pursuant to the Agreement to likewise utilize the U.S. Department of Homeland Security's E-Verify system to verify the employment eligibility of all new employees hired by the subconsultant/subcontractor during the Agreement term.

2. That the Consultant/Contractor understands and agrees that its failure to comply with the verification requirements as set forth herein or its failure to ensure that all employees and subconsultant/subcontractors performing work under this Agreement are legally authorized to work in the United States and the State of Florida constitute a breach of this Agreement for which the City may immediately terminate the Agreement without notice and without penalty. The Consultant/Contractor further understands and agrees that in the event of such termination, the Consultant/Contractor shall be liable to the City for any costs incurred by the City as a result of the Consultant's/Contractor's breach

Consultant/Contractor shall execute and return the Affidavit of E-Verify Requirements Compliance to City. IN WITNESS WHEREOF, the parties have made and executed this Agreement for the purposes stated above.

CIC CONSTRUCTION GROUP USA, LLC

Consultant/Contractor Name and Address

Signature

EDWIN CARRASQUILLO-EXECUTIVE DIRECTOR

Name and Title

Attachment: Exhibit E - CIC Construction Group USA - 22-BG-06 Bid Proposal (2023-R-55 : Fire Station Construction)

SECTION 00 66 00
AFFIDAVIT REGARDING WORKMEN'S COMPENSATION

State of FLORIDA

County of ORANGE

CIC CONSTRUCTION GROUP USA, LLC being duly sworn according to law, deposes and says (it, he, they) ha_ accepted the Workmen's Compensation laws of the State of Florida, with its supplements and amendments and has insured (its, his, their) liability there under in accordance with the terms of said Laws with the LOCKTON COMPANIES Company, under the terms of Policy No. 1524176 for a period from 04/20, 2023 to 04/20, 2024.

WITNESS: Patricia Echt
Patricia Echt

CONTRACTOR:

By Edwin Carrasquillo

Title Executive Director

Sworn to and subscribed before me this 28 day of AUGUST, 2023.

Notary Public

EMELY M. DE LEON

Notary Public (Print or Type)

My Commission Expires: 05.06.2026

Notary Public State of Florida
Emely M De Leon
My Commission
HH 242246
Exp. 5/6/2026

PHYSICAL PRESENCE
PERSONALLY KNOWN

END OF SECTION

Attachment: Exhibit E - CIC Construction Group USA - 22-BG-06 Bid Proposal (2023-R-55 : Fire Station Construction)

CERTIFICATE OF LIABILITY INSURANCE

DATE (MM/DD/YYYY) 4/20/2024 8/24/2023

THIS CERTIFICATE IS ISSUED AS A MATTER OF INFORMATION ONLY AND CONFERS NO RIGHTS UPON THE CERTIFICATE HOLDER. THIS CERTIFICATE DOES NOT AFFIRMATIVELY OR NEGATIVELY AMEND, EXTEND OR ALTER THE COVERAGE AFFORDED BY THE POLICIES BELOW. THIS CERTIFICATE OF INSURANCE DOES NOT CONSTITUTE A CONTRACT BETWEEN THE ISSUING INSURER(S), AUTHORIZED REPRESENTATIVE OR PRODUCER, AND THE CERTIFICATE HOLDER.

IMPORTANT: If the certificate holder is an ADDITIONAL INSURED, the policy(ies) must have ADDITIONAL INSURED provisions or be endorsed. If SUBROGATION IS WAIVED, subject to the terms and conditions of the policy, certain policies may require an endorsement. A statement on this certificate does not confer rights to the certificate holder in lieu of such endorsement(s).

PRODUCER Lockton Companies 3280 Peachtree Road NE, Suite #1000 Atlanta GA 30305 (404) 460-3600	CONTACT NAME: PHONE (A/C, No, Ext): FAX (A/C, No): E-MAIL ADDRESS:
INSURED 1524176 CIC Construction Group USA, LLC 111 Corning Road, Suite 120 Cary NC 27518	INSURER(S) AFFORDING COVERAGE — NAIC # INSURER A : Zurich American Insurance Company — 16535 INSURER B : American Guarantee and Liab. Ins. Co. — 26247 INSURER C : Evanston Insurance Company — 35378 INSURER D : INSURER E : INSURER F :

COVERAGES Main **CERTIFICATE NUMBER:** 19851261 **REVISION NUMBER:** XXXXXXX

THIS IS TO CERTIFY THAT THE POLICIES OF INSURANCE LISTED BELOW HAVE BEEN ISSUED TO THE INSURED NAMED ABOVE FOR THE POLICY PERIOD INDICATED. NOTWITHSTANDING ANY REQUIREMENT, TERM OR CONDITION OF ANY CONTRACT OR OTHER DOCUMENT WITH RESPECT TO WHICH THIS CERTIFICATE MAY BE ISSUED OR MAY PERTAIN, THE INSURANCE AFFORDED BY THE POLICIES DESCRIBED HEREIN IS SUBJECT TO ALL THE TERMS, EXCLUSIONS AND CONDITIONS OF SUCH POLICIES. LIMITS SHOWN MAY HAVE BEEN REDUCED BY PAID CLAIMS.

INSR LTR	TYPE OF INSURANCE	ADDL INSD	SUBR WVD	POLICY NUMBER	POLICY EFF (MM/DD/YYYY)	POLICY EXP (MM/DD/YYYY)	LIMITS	
A	X COMMERCIAL GENERAL LIABILITY CLAIMS-MADE X OCCUR GEN'L AGGREGATE LIMIT APPLIES PER: POLICY X PRO-JECT LOC OTHER:	Y	Y	GLO 7565464	7/16/2023	7/16/2024	EACH OCCURRENCE DAMAGE TO RENTED PREMISES (Ea occurrence) MED EXP (Any one person) PERSONAL & ADV INJURY GENERAL AGGREGATE PRODUCTS - COMP/OP AGG	$ 2,000,000 $ 100,000 $ 5,000 $ 2,000,000 $ 4,000,000 $ 4,000,000 $
A	AUTOMOBILE LIABILITY X ANY AUTO X OWNED AUTOS ONLY X HIRED AUTOS ONLY SCHEDULED AUTOS NON-OWNED AUTOS ONLY	Y	Y	BAP 7565463-00	7/16/2023	7/16/2024	COMBINED SINGLE LIMIT (Ea accident) BODILY INJURY (Per person) BODILY INJURY (Per accident) PROPERTY DAMAGE (Per accident)	$ 1,000,000 $ XXXXXXX $ XXXXXXX $ XXXXXXX $ XXXXXXX
B	UMBRELLA LIAB X OCCUR X EXCESS LIAB CLAIMS-MADE DED X RETENTION $ $0	Y	Y	SXS 7335081-00	7/16/2023	7/16/2024	EACH OCCURRENCE AGGREGATE	$ 10,000,000 $ 10,000,000 $ XXXXXXX
A	WORKERS COMPENSATION AND EMPLOYERS' LIABILITY ANY PROPRIETOR/PARTNER/EXECUTIVE OFFICER/MEMBER EXCLUDED? (Mandatory in NH) Y/N: Y If yes, describe under DESCRIPTION OF OPERATIONS below	N/A	Y	WC3401588-00	4/20/2023	4/20/2024	X PER STATUTE OTH-ER E.L. EACH ACCIDENT E.L. DISEASE - EA EMPLOYEE E.L. DISEASE - POLICY LIMIT	 $ 1,000,000 $ 1,000,000 $ 1,000,000
A	Leased/Rented Equipment	N	N	CPP 7122992 - 00	7/16/2023	7/16/2024	Limit: $100,000 Ded: $5,000.00	
C	Pollution Liability			MKLV2ENV103623	7/16/2023	7/16/2024	Ded: $10,000 Occ: $1M Agg: $2M	

DESCRIPTION OF OPERATIONS / LOCATIONS / VEHICLES (ACORD 101, Additional Remarks Schedule, may be attached if more space is required)

Officers Excluded from Workers Compensation:Fred Gallo Delguidice,Gustavo A Hermida; RE: Name: Fire Station Construction Bid Number: 22-BG-06; the City of HOLLY HILL and its elected officials, officers, employees, volunteers, representatives, agents and affiliates are included as an Additional Insured as respect of General, Auto & Umbrella Liability coverage as required by written contract subject to policy terms, conditions and exclusions. Waiver of Subrogation in favor of said additional insured as respect of General, Auto, Umbrella Liability and Workers Compensation coverage as required by written contract subject to policy terms, conditions, and exclusions where applicable by state law.

CERTIFICATE HOLDER

19851261
Proof of Insurance

CANCELLATION See Attachment

SHOULD ANY OF THE ABOVE DESCRIBED POLICIES BE CANCELLED BEFORE THE EXPIRATION DATE THEREOF, NOTICE WILL BE DELIVERED IN ACCORDANCE WITH THE POLICY PROVISIONS.

AUTHORIZED REPRESENTATIVE

© 1988-2015 ACORD CORPORATION. All rights reserved.

The ACORD name and logo are registered marks of ACORD

Attachment: Exhibit E - CIC Construction Group USA - 22-BG-06 Bid Proposal (2023-R-55 : Fire Station Construction)

CONTINUATION DESCRIPTION OF OPERATIONS/LOCATIONS/VEHICLES/EXCLUSIONS ADDED BY ENDORSEMENT/SPECIAL PROVISIONS (Use only if more space is required)

30 Day's Notice of Cancellation/Non-renewal, except 10 days for nonpayment of premium, to the certificate holder when required by written agreement.

Attachment: Exhibit E - CIC Construction Group USA - 22-BG-06 Bid Proposal (2023-R-55 : Fire Station Construction)

LOCKTON

Attachment: Exhibit E - CIC Construction Group USA - 22-BG-06 Bid Proposal (2023-R-55 : Fire Station Construction)

VALUED CERTIFICATE HOLDER

To whom it may concern:

In our continuing effort to provide timely certificate delivery, Lockton Companies is transitioning to paperless delivery of Certificates of Insurance.

To ensure electronic delivery for future renewals of this certificate, we need your email address. Please contact us via the methods below, referencing Certificate Number that is listed in the Certificate Holder box just above the Certificate Holder Name or in middle section just below the Insured box towards the top **"CERTIFICATE NUMBER: ".**

- Email: **SE-EDelivery@lockton.com**
- **Include the Certificate ID number**
- **Subject line: TSU E-Delivery**

If you no longer need this certificate, please contact us at the email address above, reference the Certificate Holder ID number and use this subject line: "Certificate Removal"

The above inbox is for automating electronic delivery of certificates only. Please do NOT send future certificate requests to this inbox.

Thank you for your cooperation and willingness in reducing our environmental footprint.

Lockton Companies

Lockton Companies
3280 Peachtree Road NE, Ste. 250
Atlanta, GA 30305

PROJECT: REPLACEMENT FIRE STATION #96
CITY OF HOLLY HILL, FL
1020 Daytona Avenue,
Holly Hill, FL 32117

A/E Project No. 2204

OWNER: CITY OF HOLLY HILL
1065 Ridgewood Avenue,
Holly Hill, FL 32117

ARCHITECT: HALL & OGLE ARCHITECTS, INC.
208 Magnolia Ave.
Daytona Beach, FL 32114
386-255-6163

ENGINEERS: NEWKIRK ENGINEERING INC.
Ormond Beach, FL

AB CONSULTING ENGINEERS
Orlando, FL

DELOSE O'NEAL ENGINEERNG
Debary, FL

G & P ENGINEERING LLC
Winter Springs, FL

JOHN M. PATTERSON
Ormond Beach, FL

ADDENDUM NUMBER 1 DATED 10 AUGUST 2023

This Addendum is being issued to the project documents for this project. This addendum is part of the contract documents and modifies/ clarifies the project plans and specifications as follows:

BIDDER QUESTIONS:

ADD. 1.01 Drawing Sheet A2.3 & A3.0: Single Ply Roof Details & Building Elevations

Contractor Question 06: Please specify whether the roof flats will be TPO or Modified. The plans cite both. Please see image on next page for reference and clarification.

Attachment: Exhibit E - CIC Construction Group USA - 22-BG-06 Bid Proposal (2023-R-55 : Fire Station Construction)

Petersen Tite Lok Plus 18" Panel w/ 2" Rib – Clips w/ Mechanical Seams - ISO w/ Modified (Base and Cap)

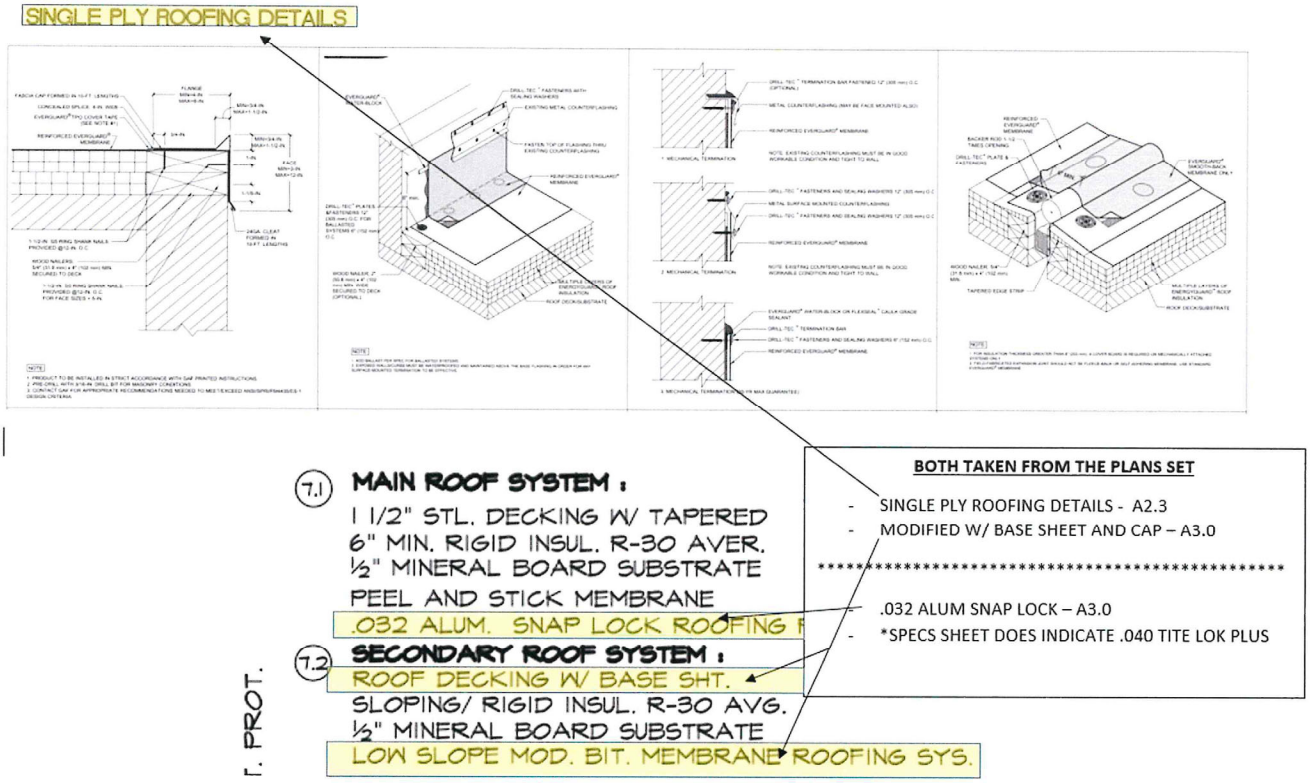

Response: The metal roofing is to be 0.040 aluminum tite-loc plus manufactured by Peterson Aluminum Corp.
Section 074100 – Revise item 7.1 in the material key to be same as spec section 074100.
The low slope single ply roofing (item 7.2) in material key) is to be 0.80 mill TPO manufactured by Carlisle Construction Materials or approved equal. Revise item 7.2 in material key per this directive.
Reference attached specification.

ADD. 1.02 Drawing Sheet A2.0 & E2.0: Floor Plans/ Dimensioned Floor Plans & Electrical Power and System Plan

At sheet A2.0, provide (2) vehicle exhaust removal units between the (2) drive through bays and attach to roof structure above reference section 2/A4.1. At furniture/ equipment schedule, add item 27 to be vehicle exhaust removal units, contractor supplied and contractor installed. Reference sheets M0.2 and M1.1 for more information.

Contractor Question 05: At sheet E2.0, vehicle exhaust removal system, note 3 calls for the Electrical Contractor to furnish and install local disconnects and limit switches. Typically this is provided by the door/ system vendor and the Electrical Contractor connects. If the Electrical Contractor is to provide, please provide details on the type of limit switch needed and the type of headed needed for the limit switch.

Response: The limit switches and local disconnects are to be provided/ installed by the overhead door equipment supplier and connected by the Electrical Contractor.

Attachment: Exhibit E - CIC Construction Group USA - 22-BG-06 Bid Proposal (2023-R-55 : Fire Station Construction)

ADD. 1.03 Drawing Sheet E3.0: Electrical Lighting Plan

Contractor Question 01: There are no designations on the fans in bunk rooms 118, 119, 120, 121 and the covered porch. Please advise as to which kind of fan is required.

Response: The ceiling fans in bunk rooms should be small 36”-40” diameter And designated as CF3. The ceiling fan at the covered porch should be 48” diameter with CF1 designation. Provide a commercial type with an exterior rating at porch.

Contractor Question 02: At room 126 on sheet E3.0, the drawings call for type (K) in the stairwell but are drawn as being linear. (K) is a recess can. Please clarify which is needed.

Response: Revise fixture to be (P) type (add to lighting fixture schedule). It is a 4ft LED wall mounted with wall brackets with lens cover. Mount horizontal and provide at least 80” clearance to stair minimum.

Contractor Question 03: At room 127, the drawings appear to show a (C) fixture or similar in this area. Please verify fixture type.

Response: Light fixtures in rooms 127 and 130 are to be (C) type NOT (B). Mount to exposed structure with unistrut or equal.

Contractor Question 04: On sheet E3.0, service riser diagram, single line appears to show a direct feed to the FACP. We are not finding a breaker to be feeding the FACP. Please confirm.

Response: The 3/4" conduit from the generator to the FACP on the service riser containing (6) #12 plus a ground is for annunciation of generator alarms. Please use position 10 on panel P1 for 20 amp red locking breaker to feed the FACP.

ADD. 1.04 Request for Substitution

Contractor Question 07: Will it be acceptable to use Mesker or Republic for hollow metal doors?

Response: Republic is acceptable.

Contractor Question 07: Will it be acceptable to use Oshkosh for wood doors?

Response: Oshkosh is acceptable.

ADD. 1.05 Sheet A2.2 & A2.3: Metal Roof Details & Single Ply Roof Details

At the general notes, all exposed aluminum fascia gutters and down spouts to be custom color to match coiling overhead doors. Tiger Drylac architectural powder coating system Series 38 RAL 3003 (Dark Red Color).

ADD. 1.06 Sheet A6.0: Finish Schedule/ Door Schedule/ Window Types

At exterior window elevations, provide interior solar fabric shade system mounted at window head. Manual roll shade R8 with 3” fascia manufactured by SWF Contract Inc. Provide complete system colors to be selected by architect.

Attachment: Exhibit E - CIC Construction Group USA - 22-BG-06 Bid Proposal (2023-R-55 : Fire Station Construction)

ADD. 1.07 Specification Section 08 3323: Overhead Coiling Doors

Overhead coiling doors at 2.02 – Coiling Doors – Item A-3 Finish – Factory painted powder coat color to be: Tiger Drylac architectural powder coating system RAL 3003 (Dark Red Color).

ADD. 1.08 Specification Section 07 5423: TPO Membrane Roofing

Reference Attached new specification.

END OF ADDENDUM NO. 1

Attachment: Exhibit E - CIC Construction Group USA - 22-BG-06 Bid Proposal (2023-R-55 : Fire Station Construction)

PROJECT: REPLACEMENT FIRE STATION #96
CITY OF HOLLY HILL, FL
1020 Daytona Avenue,
Holly Hill, FL 32117

A/E Project No. 2204

OWNER: CITY OF HOLLY HILL
1065 Ridgewood Avenue,
Holly Hill, FL 32117

ARCHITECT: HALL & OGLE ARCHITECTS, INC.
208 Magnolia Ave.
Daytona Beach, FL 32114
386-255-6163

ENGINEERS: NEWKIRK ENGINEERING INC.
Ormond Beach, FL

AB CONSULTING ENGINEERS
Orlando, FL

DELOSE O'NEAL ENGINEERNG
Debary, FL

G & P ENGINEERING LLC
Winter Springs, FL

JOHN M. PATTERSON
Ormond Beach, FL

ADDENDUM NUMBER 2 DATED 15 AUGUST 2023

This Addendum is being issued to the project documents for this project. This addendum is part of the contract documents and modifies/ clarifies the project plans and specifications as follows:

BIDDER QUESTIONS:
Saboungi Construction

ADD. 2.01 Specification Section 07 2100: Thermal Insulation

Contractor Question 01: Spec. section 07 2100 building insulation states 2½" thick polyiso board. Architectural plans call for 1½"" thick.

Response: Provide 1½" thick rigid wall insulation per partition types schedule on sheet A2.0. Revise board thickness in spec. section 07 2100 at 2.01 polyiso wall insulation item A-1 to be 1½" thickness.

Contractor Question 02: Please provide on plans where the spray-on insulation at an average thickness of 5" is located. (Per spec section 07 2100 2.03)

Attachment: Exhibit E - CIC Construction Group USA - 22-BG-06 Bid Proposal (2023-R-55 : Fire Station Construction)

Response: There is no cellulose spray foam insulation for this project. There is a minor area of spray foam at exterior walls at edges of doors, windows, pipes, and edge of roof deck to seal air/ vapor tight.
Revise spec. section 07 2100 2.03 to be as follows:

ADD. 2.02 Specification Section 08 7100: Door Hardware

Contractor Question 05: Spec. section 08 7100 2.11 key control system calls for Telkee Management System. Telkee has gone out of business.

Response: Provide cabinet by Lundkey Manufacturer.

ADD. 2.03 Specification Section 09 2400: Portland Cement Plastering

Contractor Question 06: May spec. section 09 2400 include “STO” as approved supplier?

Response: “STO” is not acceptable.

ADD. 2.04 Specification Section 09 6813: Tile Carpeting

Contractor Question 09: Please confirm spec. section 09 6813 Tile Carpeting is not applicable on this project. There is none shown on the room finish schedule.

Response: Correct. No carpet tile for this project.

ADD. 2.05 Specifications:

Contractor Question 03: Provide spec. sections for the flat roof and the toilet accessories.

Response:
Reference Addendum #01 with attached TPO Specification.
Reference attached spec section 10 2800 fo Toilet, Bath, and Laundry Accessories.

Contractor Question 08: Need spec. section on the floor epoxy paint and specialty epoxy coatings.

Response: Specialty epoxy coating is in the painting spec. section 09 9000 page 3, item 2.03 Paint System – Item F – IPS – 6 (For use in apparatus bays). The other epoxy floor paint is item E – IPS – 5 concrete floors.
Note: Fluid applied flooring, item 5 in room finish schedule is found in spec. section 09 6750.

END OF ADDENDUM NO. 2

Attachment: Exhibit E - CIC Construction Group USA - 22-BG-06 Bid Proposal (2023-R-55 : Fire Station Construction)

PROJECT: REPLACEMENT FIRE STATION #96
CITY OF HOLLY HILL, FL
1020 Daytona Avenue,
Holly Hill, FL 32117

A/E Project No. 2204

OWNER: CITY OF HOLLY HILL
1065 Ridgewood Avenue,
Holly Hill, FL 32117

ARCHITECT: HALL & OGLE ARCHITECTS, INC.
208 Magnolia Ave.
Daytona Beach, FL 32114
386-255-6163

ENGINEERS: NEWKIRK ENGINEERING INC.
Ormond Beach, FL

AB CONSULTING ENGINEERS
Orlando, FL

DELOSE O'NEAL ENGINEERNG
Debary, FL

G & P ENGINEERING LLC
Winter Springs, FL

JOHN M. PATTERSON
Ormond Beach, FL

ADDENDUM NUMBER 3 DATED 16 AUGUST 2023

This Addendum is being issued to the project documents for this project. This addendum is part of the contract documents and modifies/ clarifies the project plans and specifications as follows:

BIDDER QUESTIONS:
Saboungi Construction

ADD. 3.01 Drawing Sheet C-4: Demolition and SWPPP Plan

Contractor Question: Provide detail of the concrete washout area. Civil plan sheet 4 refers to detail on sheet 5, but there is none.

Response: Provide concrete washout area as detailed on attached sketch SK-2.

ADD. 3.02 Drawing Sheet C-6: Site Layout Plan

Contractor Question: Civil plan sheet 6 indicated the location of the Type F curb. Some pavement edges do not show any curb, yet general note 9 states "All pavement edge shall have type "D" curbing unless otherwise noted on the plans." Please clarify location of the "D" curb, if any.

Attachment: Exhibit E - CIC Construction Group USA - 22-BG-06 Bid Proposal (2023-R-55 : Fire Station Construction)

Response: At general notes, Note 9, change all curbs to be Type “F” curbing. At site layout plan, change all new curbing to be Type “F”. Reference attached revised Civil sheet 6.

ADD. 3.03 Civil Engineering:

Contractor Question: Who will perform the 3 water line taps and the sewer line tap? City or Contractor? Is there a related cost to be included in our bid and if so, how much?

Response: The contractor will need to perform the water line and sewer line taps with city staff oversight. The cost of this work will need to be determined by the contractor.

Contractor Question: Assuming the city will install the water meters is there a related cost to be included in our bid, and if so, how much?

Response: The city will install the affiliated water meters. There will be no cost to the contractor for this work.

ADD. 3.03 Specification Section 09 2400: Cement Plaster

Contractor Question: We need specification section for the air and waterproofing of the CMU.

Response: See specification section 19 2400, Cement Plaster, section 2.02, Materials, for air/ water resistive barrier components.

ADD. 3.04 Specification Section 09 6566: Resilient Athletic Flooring

Contractor Question: The specified modular floor system Protect-O-Pad P80 – Heavy Duty 4’x4’x1/2” is no longer manufactured. Please provide an alternate product.

Response: Provide Altro Ollero, 12mmx37”x37” interlocking tiles or approved equal. Color for field and trim to be selected from manufacturer standard colors by architect during submittal stage. Provide fixed edge that abuts Apparatus Bay area.

ADD. 3.05 Specification

Contractor Question: We need spec section for the flat roof.

Response: Reference Addendum #01 with attached TPO Specification.

ADD. 3.06 Bidding Questions:

Contractor Question: Would you please consider moving the bid deadline time to 2PM? This allots sufficient time for bidders to tabulate all subcontract bids and submit their entire package to the City. Other municipalities apply the 2PM timeline for this reason.

Response: In order to avoid confusion among all bidders, the deadline time for this project will remain at 10:00am on Tuesday, August 29.

Contractor Question: Can we submit the Cost Breakdown the next day?

Response: The cost breakdown for this project will be due at the time of the bid opening.

Attachment: Exhibit E - CIC Construction Group USA - 22-BG-06 Bid Proposal (2023-R-55 : Fire Station Construction)

ADD. 3.07 Specification Section 31 3116: Termite Control

At section 2.01, Materials, add Control Solutions Inc. – product Cyper TC Insecticide as an approved product.

ADD. 3.08 Drawing Sheet E2.0: Power/ Systems Floor Plan

At mezzanine storage 130 delete connection of AHU-3 (deleted from project). At Laundry and EMS/ Biohazard add connections to new mini splits AC-2 and AC-3. Reference attached sketch SK-1.

END OF ADDENDUM NO. 3

Attachment: Exhibit E - CIC Construction Group USA - 22-BG-06 Bid Proposal (2023-R-55 : Fire Station Construction)

PROJECT: REPLACEMENT FIRE STATION #96
CITY OF HOLLY HILL, FL
1020 Daytona Avenue,
Holly Hill, FL 32117

A/E Project No. 2204

OWNER: CITY OF HOLLY HILL
1065 Ridgewood Avenue,
Holly Hill, FL 32117

ARCHITECT: HALL & OGLE ARCHITECTS, INC.
208 Magnolia Ave.
Daytona Beach, FL 32114
386-255-6163

ENGINEERS: NEWKIRK ENGINEERING INC.
Ormond Beach, FL

AB CONSULTING ENGINEERS
Orlando, FL

DELOSE O'NEAL ENGINEERNG
Debary, FL

G & P ENGINEERING LLC
Winter Springs, FL

JOHN M. PATTERSON
Ormond Beach, FL

ADDENDUM NUMBER 4 DATED 22 AUGUST 2023

This Addendum is being issued to the project documents for this project. This addendum is part of the contract documents and modifies/ clarifies the project plans and specifications as follows:

BIDDER QUESTIONS:

ADD. 4.01 Drawing Sheet A4.0, A4.1, & A4.2: Building Sections and Wall Types

All sections show interior studs at main Admin/ Residential areas going to bottom of the LT. GA. Metal trusses (Elevation +10'-8" above slab).
Add Clarification:

1. Wall type 4: studs to 10'-8" brace to bottom of LT. GA. Trusses. GWB to go to 8" above ceiling typ.
2. Wall type 5 and 6: studs to run to roof deck per details on sheet A4.2. Provide 5/8" impact GWB at all corridors to 4' above slab at corridor side only. Remaining GWB to be 5/8" non-impact.
3. Provide wall insulation to roof deck around all offices, bunk rooms, toilet rooms, and mechanical room.
4. At wall types 1A and 2: delete reference to interior plaster finish. Provide painted GWB finish in exposed areas per specification section.

Attachment: Exhibit E - CIC Construction Group USA - 22-BG-06 Bid Proposal (2023-R-55 : Fire Station Construction)

ADD. 4.02 Invitation to Bid

Question: At page 17, bid schedule, site work items – Where do we include the permanent fencing and flagpole?

Response: Revise; Add items 6A and 6B to the site work section.
See below revised site work section.

NO	DESCRIPTION	UNIT	TOTAL PRICE
1	Site Sub Mobilization/ Demolition/ site Preparation	LS	
2	Earthwork	LS	
3	Paving	LS	
4	Drainage	LS	
5	Water/ Sewer/ Miscellaneous Utilities	LS	
6	Landscaping/ Irrigation	LS	
6A	Permanent Fencing	LS	
6B	Flagpole	LS	

Question: At page 19, unit pricing, at unit pricing item 'C', please clarify if this figure is for drive areas or sidewalks. It cannot be both.

Response: Revise item 'C' to be civil site concrete work for drive areas.
Add item 'F' to be civil site concrete work for sidewalks.
See below revised unit pricing section.

NO	DESCRIPTION	UNIT	TOTAL PRICE
A	Import Fill for Site Work	CY	
B	Export Soil Removal from Site	CY	
C	Civil Site Concrete Work for Drive Areas	CY	
D	Concrete Work in Above Slab Work Areas	CY	
E	Concrete for Slab and Foundation Work	CY	
F	Civil Site Concrete for Sidewalks	CY	

Question: Bid schedule, bidding, item 22 – Please provide specification on flooring materials or an allowance for material. There are no selections on flooring.

Response: Reference sheet A6.0 room finish schedule that list floor finishes for all spaces. Reference specification sections 09 3000 Tile, 09 6519 LVT Flooring, 09 6750 Fluid Applied Flooring, and 09 9000 Painting for additional floor paint systems.
All flooring systems to be together as item 22.

ADD. 4.03 Specification Section 08 5113: Aluminum Windows

Question: Will project accept Kawneer 501 impact system.

Response: No, the request must meet all the requirements of specification section 01 600 and section 08 5113. This has not been done.

Question: Is the project a must mitigation blast or is Level E impact acceptable without the blast.

Response: This project is a risk category IV per design loads on sheet S0.0 (Structural). Also specification section 08 5113, aluminum windows requires large and small missile impact resistance and no blast resistance.

Attachment: Exhibit E - CIC Construction Group USA - 22-BG-06 Bid Proposal (2023-R-55 : Fire Station Construction)

Question: What is the make up for glazing?

Response: Glass is a 9/16" monolithic impact glazing system:
3/16" clear with Solarban 90 (Low E) heat strength 0.090 PVB interlayer
3/16" clear heat strengthened
Glazing system to meet SHGC of 0.25 minimum.

ADD. 4.04 Drawing Sheet E3.0: Lighting Plan

Question: What type of ceiling fans need to be quoted for the truck bay area?

Response: The (4) CF2 (ceiling fans) at the apparatus bay should be commercial grade with exterior rating 48-52 inch blade width.
The (2) CF1 at physical training should be commercial grade with exterior rating 36" blade width.

ADD. 4.05 Drawing Sheet A1.0 & E3.0: Site Plan and Lighting Plan

Question: Who is supplying the backup generator?

Response: The new backup generator is supplied by and hooked up by the electrical contractor per sheet E3.0. The G.C. is to provide the foundation, fence enclosure, and roof cover system.
The cost for complete package is to be shown on bid schedule services, item 29 – emergency generator system.

ADD. 4.06 General Project Schedule Question

There is a concern that some items might have long lead times.

Response: Bid the project per the bid package and project documents. Lead time issues will be discussed and resolved with selected contractor before award of project.

END OF ADDENDUM NO. 4

Attachment: Exhibit E - CIC Construction Group USA - 22-BG-06 Bid Proposal (2023-R-55 : Fire Station Construction)

PROJECT: REPLACEMENT FIRE STATION #96
CITY OF HOLLY HILL, FL
1020 Daytona Avenue,
Holly Hill, FL 32117

A/E Project No. 2204

OWNER: CITY OF HOLLY HILL
1065 Ridgewood Avenue,
Holly Hill, FL 32117

ARCHITECT: HALL & OGLE ARCHITECTS, INC.
208 Magnolia Ave.
Daytona Beach, FL 32114
386-255-6163

ENGINEERS: NEWKIRK ENGINEERING INC.
Ormond Beach, FL

AB CONSULTING ENGINEERS
Orlando, FL

DELOSE O'NEAL ENGINEERNG
Debary, FL

G & P ENGINEERING LLC
Winter Springs, FL

JOHN M. PATTERSON
Ormond Beach, FL

ADDENDUM NUMBER 5 DATED 24 AUGUST 2023

This Addendum is being issued to the project documents for this project. This addendum is part of the contract documents and modifies/ clarifies the project plans and specifications as follows:

BIDDER QUESTIONS:

ADD. 5.01 General Questions

Question 1: Please clarify the R-value of the flat roof system.

Response: Material key calls for R-30 for flat and pitched roofs.

Question 2: Please clarify if the owner requires the awarded G.C. to provide "Builder's Risk" insurance for full contract value with the city listed as loss payee.

Response: Yes, provide 100% coverage per ITB section 000800A(111)A.

Attachment: Exhibit E - CIC Construction Group USA - 22-BG-06 Bid Proposal (2023-R-55 : Fire Station Construction)

Question 3: The foundations in section 3/S2.0 are not on the schedule or identified on sheet S1.0. Please clarify.

Response: The masonry columns MC1 have a continuous footing WF30 as shown in plan and foundation schedule on sheet S1.0. The detail 3/S2.0 is not used on this project. The connection of vertical steel to footing is similar.

Question 4: Is there an interface device required to connect the phone system to access the paging system? This is a device that is used if there is a phone system installed in a facility. If there is only one phone line, then this would not be used.

Response: Yes, this will be required to facilitate paging from multiple locations.

Question 5: Please clarify if cameras are furnished and installed by the owner.

Response: Black box and wire path to data closet to be provided by electrical contractor. See legend. Equipment and wiring for security system by owner.

Question 6: The specification for standing seam roof state plywood deck and doesn't specify insulation, and details on sheet A2.2 show 8" insulation on steel deck. Please clarify.

Response: Sheet A2.2 shows metal roof details and roof insulation. Detail 2/A2.2 calls for 6" thick insulation typ. The material key on building/ wall section sheets call for a 6" thick R-30 insulation system typ.

Question 7: Door 27 is called to be fiberglass with vision lite in aluminum frame. There is no door manufacturer that has a level E FPA.

Response: Door 27 to be hollow metal door and frame with no vision panel. Keep hardware as specified and provide level E compliance.

Question 8: Specification section 10 1400 – Plastic Signs does not include the City Fire Rescue logo sign shown on plan sheet A3.0. Will the City furnish and install this?

Response: No, G.C. to supply a 44" painted aluminum logo as shown on sheet A3.0. City will provide artwork for specialty signage for subcontractor to use. Size per detail and baked enamel finish. Colors per artwork. Flush stud install per manufacturer requirements and 1" deep. Provide 8" H cast aluminum numbers 1020 (building address) at entry tower as shown on sheet A3.0. Numbers to be baked enamel finish, flush stud installation, and Helvetica type 1" deep.

Question 9: 3. Plan Sheet A2.0 indicates the G.C. to include the #5 flat screen TV and #26 Bronze dedication plaque. Please provide more info on these or perhaps these could be changed to OS/CI.

Response: Item 5 in the schedule is a flat screen wall mount bracket (NOT the TV). Provide wood blocking at stud wall. TV and bracket to be owner supplied and contractor installed.
Item 26 bronze dedication plaque is detailed on sheet A7.3. Provide an allowance for a 24"x30" with similar text and logo. As shown it will be contractor supplied and contractor installed.

Attachment: Exhibit E - CIC Construction Group USA - 22-BG-06 Bid Proposal (2023-R-55 : Fire Station Construction)

Question 10: We assume bid schedule item 18 needs to include the (4) overhead garage doors.

Response: Yes, they are part of this bid item.
Question 11: Where do we include the cost of section 09 2400 – Cement Plaster in the bid schedule?

Response: Include it in item 12 – Masonry Work/ Stone Panels

Question 12: Where do we include the cost of painting? Please allow one L.S. item for painting.

Response: We have revised the bid schedule and added item 25 – Painting. See attached revised bid schedule.

Question 13: Due to the changes to the forms, please issue a revised Cost Breakdown Schedule – section 00 31 00 Schedule of unit prices.

Response: See attached revised bid schedule.

Question 14: Page A2.2 diagrams 1,2,3 and 4 show PolyISO to be 8" but if measured on plans it is 3". However, A3.0 under Main Roof System it shows 6" PolyISO but then states R30 Average, which would be 5.2". Please advise on ISO thickness under .040 Aluminum panels.

Response: Roof insulation is to be 6” thick at metal roofs.

Question 15: On page A3.0 it states a Base sheet, R30 insulation with a taper, and 1/2" mineral board. Is it correct to assume they want a 1/2" Densdeck layer over the ISO Taper and fully adhered .080 TPO?

Response: Correct, ½” cover board to be ½” Densdec cover board.

Question 16: We can do Carlisle .115 Fleeceback TPO for the same price as .080. This is a much better system, especially with Densdeck cover board. Is this an acceptable alternate?

Response: Bid per 080 TPO specified (it may be accepted after bid if owner chooses).

Question 17: What are the AL and AS symbols in restrooms 114 and 115? Would like to have verified for potential systems scope of work.

Response: Please ignore those two symbols in restrooms.

Question 18: What disconnects are to be provided and installed by the electrical contractor? Only one I see identified is for the compressor in the stairwell (no info given) – checked Electrical & Mechanical Drawings.

Response: All required disconnects are to be furnished and installed by electrical contractor.

Question 19: Is the electrical contractor to provide disconnect and clock box for Range Hood System or will that be provided by others? Please advise.

Response: Electrical contractor to provide disconnect and the balance of the system equipment, including clock box if present, will be furnished by others.

Attachment: Exhibit E - CIC Construction Group USA - 22-BG-06 Bid Proposal (2023-R-55 : Fire Station Construction)

Question 20: What is the existing brand/manufacturer for the following?
Fire Alarm Devices
Intercom Speakers/ Devices
Security Cameras/ Devices
Access Control Devices/ Card Readers

Response: New equipment will not necessarily be manufactured by the same company.

END OF ADDENDUM NO. 5

Attachment: Exhibit E - CIC Construction Group USA - 22-BG-06 Bid Proposal (2023-R-55 : Fire Station Construction)

PROJECT: REPLACEMENT FIRE STATION #96
CITY OF HOLLY HILL, FL
1020 Daytona Avenue,
Holly Hill, FL 32117

A/E Project No. 2204

OWNER: CITY OF HOLLY HILL
1065 Ridgewood Avenue,
Holly Hill, FL 32117

ARCHITECT: HALL & OGLE ARCHITECTS, INC.
208 Magnolia Ave.
Daytona Beach, FL 32114
386-255-6163

ENGINEERS: NEWKIRK ENGINEERING INC.
Ormond Beach, FL

AB CONSULTING ENGINEERS
Orlando, FL

DELOSE O'NEAL ENGINEERNG
Debary, FL

G & P ENGINEERING LLC
Winter Springs, FL

JOHN M. PATTERSON
Ormond Beach, FL

ADDENDUM NUMBER 6 DATED 25 AUGUST 2023

This Addendum is being issued to the project documents for this project. This addendum is part of the contract documents and modifies/ clarifies the project plans and specifications as follows:

BIDDER QUESTIONS:

ADD. 6.01 General Questions

Question 1: G.C. is expected to pay the building permit fees per schedule. We assume the owner will pay for all impact fees including County Road impact fee. If these costs are to be borne by the G.C. please provide us with the City's impact fees amount.

Response: The City impact fees will be included in the permit cost, which will be paid by the City. The City will also pay for the Volusia County Transportation Impact Fee.

END OF ADDENDUM NO. 6

Attachment: Exhibit E - CIC Construction Group USA - 22-BG-06 Bid Proposal (2023-R-55 : Fire Station Construction)

SECTION 00 30 00
PROPOSAL

FOR

CITY OF HOLLY HILL

FIRE STATION CONSTRUCTION

BID NO. 22-BG-06

(To be completed in Duplicate)

Bidder's Name: Collage Design & Construction Group, Inc.

Submitted: August 29th, 2023

City of Holly Hill
City Clerk
1065 Ridgewood Avenue
Holly Hill, FL 32117

To Whom it May Concern:

The undersigned, as Bidder, hereby declares that the only person or persons interested in the Proposal, as principal or principals, is or are named herein and that no other persons than herein mentioned has any interest in the Proposal or the Contract to which the work pertains; that this Proposal is made without connection or arrangement with any other person, company, or parties making a bid or proposal and that the Proposal is in all respects fair and made in good faith without collusion or fraud.

The Bidder further declares that he has examined the site of the work and that from personal knowledge and experience, or that he/she has made sufficient test holes and/or other subsurface investigations to fully satisfy self that such site is a correct and suitable one for this work and he/she assumes full responsibility therefore; that he/she is familiar with all legal requirements (Federal, State and local laws, ordinances, rules and regulations) pertaining to the Work; that he/she has examined the Drawings and Specifications for the work and from his/her own experience or from professional advice that the Drawings and Specifications are sufficient for the work to be done and he/she has examined the other Contract Documents and all addenda relating thereto, and that he/she has satisfied himself/herself fully, relative to all matters and conditions with respect to the work to which this Proposal pertains.

The Bidder proposes and agrees, if this Proposal is accepted, to contract with the City of Holly Hill, (Owner) in the form of contract specified, to furnish all necessary materials, equipment, machinery, tools, apparatus, transportation, and labor and to perform all work necessary to complete the Work

Attachment: Exhibit F - Collage Construction - 22-BG-06 Bid Proposal (2023-R-55 : Fire Station Construction)

specified in the Proposal and other Contract Documents. The Bidder further proposes and agrees to comply in all respects with the time limits for commencement and completion of the Work as stated in the Contract Form.

The Bidder further agrees that the deductions for liquidated damages, as stated in the Contract Form, constitute fixed and agreed liquidated damages to reimburse the Owner for additional costs to the Owner resulting from the Work not being completed within the time limit stated in the Contract Form.

The undersigned agrees to accept as full compensation for completion of the project in full compliance with the Contract Documents, the unit prices for the items named in Section 00 31 00, Schedule of Unit Prices, submitted herein with this Proposal.

The undersigned offers to furnish all materials, equipment and labor for construction of,

FIRE STATION CONSTRUCTION

for the City of Holly Hill, Florida, complete in every respect in strict accordance with the drawings, specifications and any future changes therein. The Contractor shall perform these obligations for the prices listed in the "Schedule of Unit Prices: Section 00 31 00" attached and made a part of this Bid. **The bid total is:**

Three Million, Six Hundred Forty Two Thousand, Four Hundred Eighteen
(In Words)

Dollars $ 3,642,418.74 (In Figures)

COMPLETION TIME OF CONTRACT

The Contractor agrees that the work shall be started not later than the date indicated in the Notice to Proceed and that the total work shall be completed within **365 days.**

The Contractor further agrees that for each calendar day, with the exception of Sundays and legal holidays that any work shall remain uncompleted after the stations completion times stipulated above the sum of **$500 (Five Hundred Dollars)** per day shall be deducted from monies due the contractor, not as a penalty, but as liquidated damages. If the Contractor is declared in default in accordance with the provisions of the Specifications, liquidated damages shall be charged as provided herein, and such amounts shall be deducted from the final amount payable to the Contractor or his/her Surety. Should the total amount chargeable as liquidated damages exceed the amount due or payable to the Contractor or his/her Surety, then such excess shall be paid to the Owner by the Contractor or his/her Surety.

Attachment: Exhibit F - Collage Construction - 22-BG-06 Bid Proposal (2023-R-55 : Fire Station Construction)

Executed in 1 Counterparts

AIA® Document A310™ – 2010

Bid Bond

CONTRACTOR:
(Name, legal status and address)
Collage Design and Construction Group, Inc.

585 Technology Park
Lake Mary, FL 32746

SURETY:
(Name, legal status and principal place of business)
Swiss Re Corporate Solutions America Insurance Corporat
1200 Main Street, Suite 800
Kansas City, MO 64105-2478

This document has important legal consequences. Consultation with an attorney is encouraged with respect to its completion or modification.

Any singular reference to Contractor, Surety, Owner or other party shall be considered plural where applicable.

OWNER:
(Name, legal status and address)
City of Holly Hill
1065 Ridgewood Avenue
Holly Hill, FL 32117

BOND AMOUNT: (5%) Five Percent of Amount Bid

PROJECT:
(Name, location or address, and Project number, if any)
BID NO. 22-BG-06, FIRE STATION CONSTRUCTION
Holly Hill, FL

The Contractor and Surety are bound to the Owner in the amount set forth above, for the payment of which the Contractor and Surety bind themselves, their heirs, executors, administrators, successors and assigns, jointly and severally, as provided herein. The conditions of this Bond are such that if the Owner accepts the bid of the Contractor within the time specified in the bid documents, or within such time period as may be agreed to by the Owner and Contractor, and the Contractor either (1) enters into a contract with the Owner in accordance with the terms of such bid, and gives such bond or bonds as may be specified in the bidding or Contract Documents, with a surety admitted in the jurisdiction of the Project and otherwise acceptable to the Owner, for the faithful performance of such Contract and for the prompt payment of labor and material furnished in the prosecution thereof; or (2) pays to the Owner the difference, not to exceed the amount of this Bond, between the amount specified in said bid and such larger amount for which the Owner may in good faith contract with another party to perform the work covered by said bid, then this obligation shall be null and void, otherwise to remain in full force and effect. The Surety hereby waives any notice of an agreement between the Owner and Contractor to extend the time in which the Owner may accept the bid. Waiver of notice by the Surety shall not apply to any extension exceeding sixty (60) days in the aggregate beyond the time for acceptance of bids specified in the bid documents, and the Owner and Contractor shall obtain the Surety's consent for an extension beyond sixty (60) days.

If this Bond is issued in connection with a subcontractor's bid to a Contractor, the term Contractor in this Bond shall be deemed to be Subcontractor and the term Owner shall be deemed to be Contractor.

When this Bond has been furnished to comply with a statutory or other legal requirement in the location of the Project, any provision in this Bond conflicting with said statutory or legal requirement shall be deemed deleted herefrom and provisions conforming to such statutory or other legal requirement shall be deemed incorporated herein. When so furnished, the intent is that this Bond shall be construed as a statutory bond and not as a common law bond.

Signed and sealed this 29th day of August 2023

Diane Stephens
(Witness) Diane Stephens

Steve Engelhart
(Witness) Steve Engelhart

Collage Design and Construction Group, Inc.
(Principal)

(Title) Steve Pinyot, Exec. V.P.

Swiss Re Corporate Solutions America Insurance Corporation
(Surety) *(Seal)*

Lisa A. Roseland
(Title) Lisa A. Roseland, Attorney-in-Fact & FL Licensed Resident Agent

COLLAGE DESIGN AND CONSTRUCTION GROUP, INC. CORPORATE SEAL 1982 FLORIDA

CAUTION: You should sign an original AIA Contract Document, on which this text appears in RED. An original assures that changes will not be obscured.

Inquiries: (407) 786-777

Init.
/

AIA Document A310™ – 2010. Copyright © 1963, 1970 and 2010 by The American Institute of Architects. All rights reserved. WARNING: This AIA® Document is protected by U.S. Copyright Law and International Treaties. Unauthorized reproduction or distribution of this AIA® Document, or any portion of it, may result in severe civil and criminal penalties, and will be prosecuted to the maximum extent possible under the law. Purchasers are permitted to reproduce ten (10) copies of this document when completed. To report copyright violations of AIA Contract Documents, e-mail The American Institute of Architects' legal counsel, copyright@aia.org.
061110

Attachment: Exhibit F - Collage Construction - 22-BG-06 Bid Proposal (2023-R-55 : Fire Station Construction)

SWISS RE CORPORATE SOLUTIONS

SWISS RE CORPORATE SOLUTIONS AMERICA INSURANCE CORPORATION ("SRCSAIC")
SWISS RE CORPORATE SOLUTIONS PREMIER INSURANCE CORPORATION ("SRCSPIC")
WESTPORT INSURANCE CORPORATION ("WIC")

GENERAL POWER OF ATTORNEY

KNOW ALL MEN BY THESE PRESENTS, THAT SRCSAIC, a corporation duly organized and existing under laws of the State of Missouri, and having its principal office in the City of Kansas City, Missouri, and SRCSPIC, a corporation organized and existing under the laws of the State of Missouri and having its principal office in the City of Kansas City, Missouri, and WIC, organized under the laws of the State of Missouri, and having its principal office in the City of Kansas City, Missouri, each does hereby make, constitute and appoint:

JEFFREY W. REICH, SUSAN L. REICH, KIM E. NIV, TERESA L. DURHAM, GLORIA A. RICHARDS, CHERYL A. FOLEY,
LISA A. ROSELAND, EMILY J. GOLECKI, SONJA AMANDA FLOREE HARRIS, ROBERT P. O'LINN, NATHAN K. REICH, and SARAH O'LINN
JOINTLY OR SEVERALLY

Its true and lawful Attorney(s)-in-Fact, to make, execute, seal and deliver, for and on its behalf and as its act and deed, bonds or other writings obligatory in the nature of a bond on behalf of each of said Companies, as surety, on contracts of suretyship as are or may be required or permitted by law, regulation, contract or otherwise, provided that no bond or undertaking or contract or suretyship executed under this authority shall exceed the amount of:

TWO HUNDRED MILLION ($200,000,000.00) DOLLARS

This Power of Attorney is granted and is signed by facsimile under and by the authority of the following Resolutions adopted by the Boards of Directors of both SRCSAIC and SRCSPIC at meetings duly called and held on the 18th of November 2021 and WIC by written consent of its Executive Committee dated July 18, 2011.

"RESOLVED, that any two of the President, any Managing Director, any Senior Vice President, any Vice President, the Secretary or any Assistant Secretary be, and each or any of them hereby is, authorized to execute a Power of Attorney qualifying the attorney named in the given Power of Attorney to execute on behalf of the Corporation bonds, undertakings and all contracts of surety, and that each or any of them hereby is authorized to attest to the execution of any such Power of Attorney and to attach therein the seal of the Corporation; and it is

FURTHER RESOLVED, that the signature of such officers and the seal of the Corporation may be affixed to any such Power of Attorney or to any certificate relating thereto by facsimile, and any such Power of Attorney or certificate bearing such facsimile signatures or facsimile seal shall be binding upon the Corporation when so affixed and in the future with regard to any bond, undertaking or contract of surety to which it is attached."

SWISS RE CORPORATE SOLUTIONS AMERICA INSURANCE CORPORATION CORPORATE SEAL 1973 MISSOURI

SWISS RE CORPORATE SOLUTIONS PREMIER INSURANCE CORPORATION CORPORATE SEAL MISSOURI

By _____
Erik Janssens, Senior Vice President of SRCSAIC & Senior Vice President of SRCSPIC & Senior Vice President of WIC

By _____
Gerald Jagrowski, Vice President of SRCSAIC & Vice President of SRCSPIC & Vice President of WIC

WESTPORT INSURANCE CORPORATION CORPORATE SEAL MISSOURI

IN WITNESS WHEREOF, SRCSAIC, SRCSPIC, and WIC have caused their official seals to be hereunto affixed, and these presents to be signed by their authorized officers

this 10 day of NOVEMBER, 20 22

Swiss Re Corporate Solutions America Insurance Corporation
Swiss Re Corporate Solutions Premier Insurance Corporation
Westport Insurance Corporation

State of Illinois
County of Cook ss

On this 10 day of NOVEMBER, 20 22, before me, a Notary Public personally appeared Erik Janssens, Senior Vice President of SRCSAIC and Senior Vice President of SRCSPIC and Senior Vice President of WIC and Gerald Jagrowski, Vice President of SRCSAIC and Vice President of SPCSPIC and Vice President of WIC, personally known to me, who being by me duly sworn, acknowledged that they signed the above Power of Attorney as officers of and acknowledged said instrument to be the voluntary act and deed of their respective companies.

OFFICIAL SEAL
CHRISTINA MANISCO
NOTARY PUBLIC, STATE OF ILLINOIS
My Commission Expires March 23, 2026

Christina Manisco, Notary

I, Jeffrey Goldberg, the duly elected Senior Vice President and Assistant Secretary of SRCSAIC and SRCSPIC and WIC, do hereby certify that the above and foregoing is a true and correct copy of a Power of Attorney given by said SRCSAIC and SRCSPIC and WIC, which is still in full force and effect.
IN WITNESS WHEREOF, I have set my hand and affixed the seals of the Companies this 29th day of August, 20 23.

SEAL

Jeffrey Goldberg, Senior Vice President & Assistant Secretary of SRCSAIC and SRCSPIC and WIC

Attachment: Exhibit F - Collage Construction - 22-BG-06 Bid Proposal (2023-R-55 : Fire Station Construction)

SUPPLEMENTAL REQUIREMENTS

The following documents are attached to and made a condition of this bid:

Schedule of Unit Prices: Section 00 31 00
Statement of Bidder's Qualifications: 00 32 00
Listing of Subcontractors: Section 00 33 00
Listing of Previous Experience: Section 00 33 10
Public Entity Crimes Statement: Section 00 47 00
Anti-Collusion Statement: Section 00 48 00
Drug Free/Tie Preference Statement: Section 00 48 50
Compliance with Public Records Law 00 48 60
W-9 Form 00 48 70
E-Verify Compliance 00 48 80
City of Holly Hill Insurance Requirements: Section 00 80 00A

REQUIRED DISCLOSURE

At its sole discretion, the City of Holly Hill, Florida may reject any bidder the City finds to lack, or whose present or former executive employees, officers, directors, stockholders, partners or owners are found by the City to lack honesty, integrity, or moral responsibility. The discretion of the City may be exercised based on the City's own investigation, public records, or any other reliable sources of information. By submitting a bid, bidder recognizes and accepts that the City may reject the bid based upon the exercise of its sole discretion and bidder waives any claim it might have for damages or other relief resulting from the rejection of its bid based on these grounds.

Attachment: Exhibit F - Collage Construction - 22-BG-06 Bid Proposal (2023-R-55 : Fire Station Construction)

ACKNOWLEDGMENT OF ADDENDA

Addenda will be issued via email and it is the Bidder's responsibility to confirm that all addenda have been received prior to submitting a bid for the project. Acknowledgment is hereby made of the following Addenda received since issuance of Drawings and Specifications:

Addendum No. 001 Dated: 08/10/2023 Addendum No. 004 Dated: 08/22/2023
Addendum No. 002 Dated: 08/15/2023 Addendum No. 005 Dated: 08/24/2023
Addendum No. 003 Dated: 08/16/2023 Addendum No. 006 Dated: 08/25/2023

Attached hereto is a cashier's check on the _____ Bank of _____ or Bid Bond for the sum of 5% of amount of bid Dollars (_____), made payable to The City of Holly Hill (Owner).

Collage Design & Construction Group, Inc.
(Name of Bidder) (Affix Seal)

_____
(Signature of Officer)

Executive Vice President
(Title of Officer)

Collage Design & Construction Group, Inc.
Name of Bidder

585 Technology Park
Address

Lake Mary, FL 32746
City/State/Zip

407-829-2257
Telephone

CGC020818
Contractor's Florida License Number

The full names and residences of persons and firms interested in the foregoing bid, as principals, are as follows:

Collage Design & Construction Group, Inc.
585 Technology Park, Lake Mary, FL 32746
Robert Maphis, Brian Walsh, Stephen Pinyot, Luke Walsh

END OF SECTION

Attachment: Exhibit F - Collage Construction - 22-BG-06 Bid Proposal (2023-R-55 : Fire Station Construction)

SECTION 00 31 00
SCHEDULE OF UNIT PRICES
CITY OF HOLLY HILL

FIRE STATION CONSTRUCTION

BID# 22-BG-06

BID SCHEDULE
FIRE STATION CONSTRUCTION

Collage Design & Construction Group, Ir
RESPONDENT

Site Work

NO	DESCRIPTION	UNIT	TOTAL PRICE
1	Site Sub Mobilization/Demolition/Site Preparation	LS	44680
2	Earthwork	LS	97,395
3	Paving	LS	211,715
4	Drainage	LS	71,770
5	Water/Sewer/Miscellaneous Utilities	LS	83,445
6	Landscaping/Irrigation	LS	60,223

Building

NO	DESCRIPTION	UNIT	TOTAL PRICE
7	GC Mobilization/Survey/Miscellaneous	LS	27,114.7
8	Supervision	LS	207,950.3
9	General Labor	LS	172,157
10	Building Layout/Preparation/Termite Treatment	LS	Includec
11	Concrete Work	LS	283,703
12	Masonry Work, Stone Panels and Concrete Plasters	LS	231,913.5
13	Steel Framing / Roof Joists and Deck	LS	212,400
14	Lt. Ga. Trusses / Miscellaneous Lt. Ga. Exterior Framing	LS	102,779
15	Roof System Low Slope/Pitched w/ Insulation System	LS	226,500

Attachment: Exhibit F - Collage Construction - 22-BG-06 Bid Proposal (2023-R-55 : Fire Station Construction)

16	Miscellaneous Framing/Sheeting/Decking/Flashing/Trim	LS	23,425
17	Ext. Air/Vapor/Water Sealing Masonry Walls	LS	21,092.6
18	Ext/Int Doors/Hardware/Windows/Louvers	LS	212,737
19	Interior Framing/GWB System/Finishes	LS	132,000
20	Miscellaneous Insulation/Sealing	LS	Included
21	Ceiling System/Finishes	LS	7,350
22	Floor System/Finishes	LS	92,813
23	Millwork System	LS	85,544
24	Miscellaneous Specialties/Accessories	LS	28,418.8
25	Painting – Interior & Exterior	LS	42,788

Services

NO	DESCRIPTION	UNIT	TOTAL PRICE
26	Plumbing/Gas System	LS	137,808
27	Fire Protection	LS	44,500
28	HVAC	LS	194,546
29	Electric System/IT System/Lightning Protection System	LS	285,528
30	Emergency Generator System	LS	Included
31	Owner's Unforeseen Contingency Allowance	LS	$20,000.00

Contractor Fees

NO	DESCRIPTION	UNIT	TOTAL PRICE
32	General Conditions/Overhead/Profit	LS	300,121.8
33	Performance/Payment Bond	LS	Included
34	Permits/Fees (as required)	LS	NA

Attachment: Exhibit F - Collage Construction - 22-BG-06 Bid Proposal (2023-R-55 : Fire Station Construction)

Total Bid Cost 3,642,417.74
(In Figures)

Total Bid Cost Three Million, Six Hundred Forty Two Thousand, Four Hundred Eight
(In Words)

Unit Pricing Add/Deduct

NO	DESCRIPTION	UNIT	UNIT COST
A	Import Fill for Site Work	CY	20
B	Export Soil Removal from Site	CY	15
C	Civil Site Concrete Work for Drive Areas and Sidewalks	CY	12
D	Concrete Work in Above Slab Work Areas	CY	43
E	Concrete for Slab and Foundation Work	CY	43

* The Unit Pricing Add/Deduct Section is for the establishment of unit prices in the event that change orders are required.

Submitted by: Luke Walsh
Contractor: Collage Design & Construction Group, Inc
Address: 585 Technology Park, Lake Mary, FL 32746
Telephone: 407-829-2257 Fax:
State of Florida Certified General Contractor or Underground Contractor (Required Information)
Licensee: Brian Walsh License No: CGC020818

Attachment: Exhibit F - Collage Construction - 22-BG-06 Bid Proposal (2023-R-55 : Fire Station Construction)

SECTION 00 32 00

STATEMENT OF BIDDER'S QUALIFICATIONS

All questions must be answered and the data given must be clear and comprehensive. This statement must be notarized. If necessary, questions may be answered on separate attached sheets. The bidder may submit any additional information he desires.

A. Name of bidder. Collage Design & Construction Group, Inc.

B. Permanent main office address. 585 Technology Park, Lake Mary, FL 32746

C. When organized. January 10, 1982

D. If a corporation, where incorporated. The State of Florida

E. How many years have you been engaged in the contracting business under your present firm or trade name? 41 Years

F. Contracts on hand: (Schedule these, showing amount of each contract and the appropriate anticipated dates of completion.) Attached.

G. General character of work performed by your company. General Contractor, Design Builder, Construction Manager

H.(1) Have you ever failed to complete any work awarded to you? If so, where and why? NO

H.(2) Provide list of any lawsuits or judgments filed by or against your company in the last three years, indicating the nature and outcome. Attached.

I. Have you ever defaulted on a contract? If so, where and why? NO

J. List the more important projects recently completed by your company, stating the approximate cost for each and the month and year completed. Attached.

K. List your major equipment None.

L. Experience in construction work similar in type to this project. Attached.

M. Background and experience of the principal members of your organization, including the officers. Attached.

N. Credit available: $ 2,500,000.00

Attachment: Exhibit F - Collage Construction - 22-BG-06 Bid Proposal (2023-R-55 : Fire Station Construction)

O. Give bank reference: Climate First Bank, see attached.

P. Will you, upon request, fill out a detailed financial statement and furnish any other information that may be required by the Owner? YES

Q. The undersigned hereby authorizes and requests any person, firm, or corporation to furnish any information requested by the Owner in verification of the recitals comprising this Statement of Bidder's Qualifications.

Dated at this 29th day of August, 2023.

Collage Design & Construction Group, Inc.
Name of Bidder Stephen Pinyot
By: Executive Vice Presider
Title

State of Florida

County of Seminole

Stephen J Pinyot being duly sworn deposes and says that he is the Executive Vice President of Collage Design & Construction Group, Inc and that the answers to the Collage Design & Construction Group, Inc foregoing questions
Name of Organization
and all statements therein contained are true and correct.

Subscribed and sworn to before me this 29th day of August, 2023.

Notary Public

Notary Public (Print or Type) My commission expires

ELIJAH LUKE WALSH
Notary Public - State of Florida
Commission # HH 225428
My Comm. Expires Feb 7, 2026
Bonded through National Notary Assn.

Attachment: Exhibit F - Collage Construction - 22-BG-06 Bid Proposal (2023-R-55 : Fire Station Construction)

COLLAGE
CONSTRUCTION • INTEGRATED SERVICES

F. Contracts on hand: (Schedule these, showing amount of each contract and the appropriate anticipated dates of completion.)

Job No.	Project	Proj Complete	Revised Contract Price
59831	Climate First Bank Winter Park	6/15/2023	1,357,920
59839	Palm Coast United Methodist Church	8/14/2023	8,956,703
59838	Amtrak-Wilmington, DE_ADASP Reno	9/21/2023	8,898,422
59760	Marriott Tribute	11/1/2023	13,377,628
59433	Triple M Tube Tech Ph II	11/30/2023	6,698,267
59850	Amtrak Sanford- Yard 15 ton crane	12/15/2023	1,647,000
59820	WHRCC: Preconstruction Phase	12/31/2023	95,000
59846	The Hotel Marion	12/31/2023	995,719
59848	Climate First Bank - Mount Dora Design	12/31/2023	430,745
59849	Tampa Union Station Renovation Design	12/31/2023	266,863
59851	Bunnell Admin- Police Dept Complex	12/31/2023	533,795
59852	Fairway Christian Church Design	12/31/2023	714,280
59842	GCC PH II Learning Center	2/28/2024	5,839,188
59841	Climate First Bank - St. Petersburg	3/20/2024	2,739,854
59847	Amtrak Pittsburgh	3/20/2024	4,833,320
59853	Grace World Outreach Improvements	4/30/2024	2,470,666
59843	Harvest Time International	6/30/2024	6,772,887
59856	Holy Cross Luthern Academy	6/30/2024	3,455,500
59837	Amtrak-East Glacier Park, MT-ADASP	7/12/2024	5,358,615
59741	Creative Village Central Park	7/31/2024	5,347,600
59742	CV Central Park GMP #2	7/31/2024	4,428,931
59833	Amtrak-Devils Lake-ADASP Renovation	7/31/2024	4,250,010
59844	East Memorial Baptist Church	8/12/2024	18,346,736
59836	Amtrak-Burlington,IA-ADASP Reno	8/28/2024	11,166,912
59854	Amtrak McComb	11/14/2024	8,107,000
59834	RSW Terminal Expansion	4/15/2025	36,658,833
59810	Hyatt Place-NSB	6/30/2025	22,276,108
59835	Amtrak-Havre-ADASP Renovation	8/1/2025	5,616,677

DESIGN BUILDERS
GENERAL CONTRACTORS
CONSTRUCTION MANAGERS
Committed to Quality

THE COLLAGE COMPANIES
Corporate Office
585 Technology Park
Lake Mary, Florida 32746
P 407.829.2257
F 407.829.2258
www.collage-usa.com
CG C020618

Attachment: Exhibit F - Collage Construction - 22-BG-06 Bid Proposal (2023-R-55 : Fire Station Construction)

CORPORATE SUPPORT TEAM



BRIAN A. WALSH FDBIA, LEED AP, BD+C

Founder, Chairman, CEO

Current Project Assignments:
5%

Years with Collage / Other Firm:
41 Years Collage

Education & Registrations:
Bachelor of Architecture, 1979
University of Miami

Certified General Contractor
CGC020818

Licenses: Florida, Virginia

FDBIA Design Build Professional

LEED Accredited Professional

Office Location:
Lake Mary

Brian has directed the firm's activities and rapid growth towards quality and excellence since 1982. His design and construction projects have won numerous awards and his team work approach to problem solving has positioned him in a leadership role for all phases of design and construction management for traditional and alternative methods of delivery for a successful project. Mr. Walsh's experiences include client relations, contract preparation and negotiation, pre-construction services, logistical planning, permit expediting, cost and quality control, operations management, dispute resolution and real estate development. His extensive knowledge of fully integrated services and years of successful design build projects make Mr. Walsh an industry expert. His knowledge of design, construction and quality detailing are a tremendous benefit to clients and provide Owners with the maximum building for their investment. Since early in his professional career Brian has focused his business life around having a bottom line purpose as well as a bottom line profit. His business is his ministry and he continues to give back to the central Florida community and beyond. Mr. Walsh has been published in several magazines and industry journals and is a requested speaker for industry and community groups and organizations.

Experience:

- **University of North Florida, Fine Arts Complex**, Jacksonville
- **Dyer Boulevard Park,** West Palm Beach
- **Halpatiokee Regional Park**, Stuart
- **LYNX Operations Facilities**, Orlando
- **AmeriSuites Hotel**, Kissimmee
- **Calypso Cay Vacation Club**, Kissimmee
- **Amtrak Historic Renovations**, Orlando
- **Amtrak 1013 Renovations**, Winter Haven, Tampa, Okeechobee
- **Amtrak Renovations**, Sanford
- **Greater Orlando Aviation Authority**, OIA, Orlando

Attachment: Exhibit F - Collage Construction - 22-BG-06 Bid Proposal (2023-R-55 : Fire Station Construction)

M. PRE-CONSTRUCTION SERVICES STAFF – *Pre-Construction Organization Chart*

CORPORATE SUPPORT TEAM



ROB MAPHIS DBIA, LEED AP, BD+C

President

Rob is a lifelong Floridian and has been engaged in the business of building throughout the state for over 32 years. As President of The Collage Companies, he provides overall management for all of Collage's projects. Rob has held an array of positions in the construction industry. His wide-ranging experience has included Office Engineer and Estimator, Project Engineer, Project Manager, Operations Manager, Vice President, Branch Manager and COO. Rob's career includes direct involvement with the construction of a variety of public facilities, including numerous school, college/ university, healthcare, federal and municipal projects. He volunteers and holds leadership positions in many community, business and charitable groups.

Current Project Assignments:

5%

Years with Collage / Other Firm:

6 Years Collage
24 Years Other

Education & Registrations:

B.S. Building Construction, University of Florida, with Honors

Florida Certified General Contractor CGC59537

Mississippi Building Construction No. 23526-MC

North Carolina General Contracting No. 84501

DBIA Design Build Professional

LEED AP BD+C

30-Hour OSHA Certification

FDEP Qualified Stormwater Management Inspector

Office Location:

Lake Mary

Experience:

- **Westmonte Recreation Center,** Altamonte Springs
- **Lake Lorna Doone Park,** Orlando, FL
- **Halpatiokee Regional Park**, Stuart
- **LYNX Operations Facilities**, Orlando
- **AmeriSuites Hotel**, Kissimmee
- **Northland Church,** Longwood
- **Calypso Cay Vacation Club**, Kissimmee
- **Winterhaven Rec & Aquatic Center,** Winterhaven
- **Calypso Cay Resort.** Orlando
- **Wellington Aquatic Complex,** Wellington
- **Creekside Christian Church,** St. Johns

Attachment: Exhibit F - Collage Construction - 22-BG-06 Bid Proposal (2023-R-55 : Fire Station Construction)

CORPORATE SUPPORT TEAM



STEVE PINYOT

Executive Vice President

Current Project Assignments:
10%

Years with Collage / Other Firm:
28 Years Collage
13 Years Other

Certifications:
Certified General Contractor (CG C046469)

Education & Registrations:
B.S. Civil Engineering, University of Pittsburgh

Certified General Contractor (CG C046469)

Office Location:
Lake Mary

Stephen J. Pinyot began his construction career in 1982 and found his niche in the "Pre-Construction" end of the business. He joined The Collage Companies ir 1995 as Pre-Construction Manager and was quickly promoted to Executive Vice President.

As Executive Vice President for Pre Construction, Mr. Pinyot is responsible for construction management and operations through any delivery method: construction management, general contracting, design/build, or design/bid/build In addition, he directs proper administration and execution of projects with proje teams through clear communication skills. Mr. Pinyot coordinates with each project manager to allow a smooth transfer of information about project details, scheduling, cost and subcontractor proposals. He manages the overall project schedules and adherence to contract performance standards.

Experience:

- **Westmonte Recreation Center,** Altamonte Springs
- **University of North Florida, Fine Arts Complex**, Jacksonville
- **Dyer Boulevard Park,** West Palm Beach
- **Halpatiokee Regional Park**, Stuart
- **LYNX Operations Facilities**, Orlando
- **AmeriSuites Hotel**, Kissimmee
- **Calypso Cay Vacation Club**, Kissimmee
- **Amtrak Historic Renovations**, Orlando
- **Amtrak 1013 Renovations**, Winter Haven, Tampa, Okeechobee
- **Amtrak Renovations**, Sanford
- **SJRWMD Apopka Service Center,** St. Johns County
- **Bethune Cookman University Business Hospitality Building**, Daytona Beach, FL

Attachment: Exhibit F - Collage Construction - 22-BG-06 Bid Proposal (2023-R-55 : Fire Station Construction)

CORPORATE SUPPORT TEAM



BOB GILBERT DBIA

Operations Manager

Mr. Gilbert is a certified design-build designated professional (DBIA) with decades of outstanding construction management and engineering experience. His expertise includes more than $3.5 billion in constructed costs and over a decade of alternative project delivery experience totaling $2.5 billion. He has consistently demonstrated success in developing and delivering infrastructure, water, wastewater and industrial projects to federal, industrial and municipal clients on schedule and within budget. Specialized in alternative project delivery, Mr. Gilbert is responsible for a diversified range of key, large-scale water and wastewater design-build, design-bid-build, and construction management at-risk projects and business developmen.

Current Project Assignments:

10%

Years with Collage / Other Firm:

1 Years Collage
37 Years Other

Education & Registrations:

Bachelors of Science, Mechanical Engineering
San Diego State University

Design-Build Designated Professional

Licensed General Contractor in Multiple States

Office Location:

Lake Mary

Experience:

- **Hyatt Vilano Beach,** Vilano
- **Marriott Tribute Hotel,** St. Augustine
- **Luminary Green at Creative Village,** Orlando
- **Westmonte Recreation Center,** Altamonte Springs
- **Winterhaven Rec & Aquatic Center,** Winterhaven

Attachment: Exhibit F - Collage Construction - 22-BG-06 Bid Proposal (2023-R-55 : Fire Station Construction)

M. PRE-CONSTRUCTION SERVICES STAFF - Pre-Construction Organization Chart

CORPORATE SUPPORT TEAM



BONNIE STAPP CPA, MSA

Chief Financial Officer

Ms. Stapp is a highly accomplished, results-driven senior accounting and financial management executive with more than 15 years' experience in accounting and operations management. Bonnie has demonstrated the ability to streamline business operations that drive growth and increase efficiency and bottom-line profit. She has strong qualifications in developing and implementing financial controls and processes, and possesses solid leadership, communication and interpersonal skills to establish rapport of staff and management.

Ms. Stapp is involved with every project of The Collage Companies to provide financial oversight and accountability.

Current Project Assignments:

10%

Years with Collage / Other Firm:

1 Year Collage
15 Years Other

Education & Registrations:

Masters of Science in Accounting ~ University of Central Florida

Certified Public Accountant

Office Location:

Lake Mary

Experience:

- **Hyatt Vilano Beach,** Vilano
- **Marriott Tribute Hotel,** St. Augustine
- **Luminary Green at Creative Village,** Orlando
- **Westmonte Recreation Center,** Altamonte Springs
- **Winterhaven Rec & Aquatic Center,** Winterhaven
- **Amtrak Renovations**, Sanford

Attachment: Exhibit F - Collage Construction - 22-BG-06 Bid Proposal (2023-R-55 : Fire Station Construction)

COLLAGE
CONSTRUCTION ▪ INTEGRATED SERVICES

H2. Provide list of any lawsuits or judgments filed by or against your company in the last three years, indicating the nature and outcome.

- Collage is currently Plaintiff in a case against a subcontractor's surety that is stayed pending arbitration. Case # 6:22-cv-1055-RBD-RMN pending in the Middle District of Florida.
- Collage had a case in which it has a final judgment against a defaulted subcontractor, Case # 6:21-cv-01572 pending in the Middle District of Florida.
- Collage also had a case in which it has a final judgment against a defaulted subcontractor, Case # 2022-CA-001973-O pending in Orange County, Florida.

DESIGN BUILDERS
GENERAL CONTRACTORS
CONSTRUCTION MANAGERS

Committed to Quality

THE COLLAGE COMPANIES
Corporate Office
585 Technology Park
Lake Mary, Florida 32746
P 407.829.2257
F 407.829.2258

www.collage-usa.com

CG C020816

Attachment: Exhibit F - Collage Construction - 22-BG-06 Bid Proposal (2023-R-55 : Fire Station Construction)

COLLAGE
CONSTRUCTION ▪ INTEGRATED SERVICES

O. Give bank reference:

DESIGN BUILDERS
GENERAL CONTRACTORS
CONSTRUCTION MANAGERS
Committed to Quality

CLIMATE FIRST BANK

Mr. Brian Walsh, Chairman
The Collage Companies
585 Technology Park
Lake Mary, FL 32746

To Whom it May Concern:

The Collage Companies, a General Contractor located in Lake Mary, FL, has been a valued client of Climate First Bank dating back to 2011 (including time at a previous Bank, First Green Bank)

The Collage Companies has multiple deposit accounts with our Bank and maintains a mid-seven figure average balance. Additionally, the Company has an operating line of credit with the Bank.

The $2,500,000 Line of Credit is an open ended, commercial line of credit extended to The Collage Companies, and is used very infrequently. The Line of Credit originated in December 2022 and has no expiration date due to the strength of the relationship.

The borrower and guarantor have been clients of Climate First Bank since December 2022; however we have banked the company since 2011 at our previous Bank (First Green Bank). All accounts and payments have been handled as agreed. I would consider Brian and his Company to be of superior integrity and honesty. We value the relationship immensely and look forward to a very long-term and mutually beneficial relationship.

I would be the person to contact if you have any questions regarding The Collage Companies.
My direct number is 407-694-3635.

Regards,

Chris Van Buskirk

Chris VanBuskirk
Senior Vice President
Climate First Bank
407.694.3635
Chrisv@ClimateFirstBank.com

THE COLLAGE COMPANIES
Corporate Office
585 Technology Park
Lake Mary, Florida 32746
P 407.829.2257
F 407.829.2256
www.collage-usa.com
CG C020818

Attachment: Exhibit F - Collage Construction - 22-BG-06 Bid Proposal (2023-R-55 : Fire Station Construction)

SECTION *00 33 00*

The Bidder proposes that the following subcontractors are qualified to perform the referenced work and have successfully done so on recent projects similar in nature and size. Upon approval of subcontractors listed the successful bidder shall not substitute subcontractors without approval from the Architect.

SUBCONTRACTOR	COMPANY NAME	REFERENCE
Site Work	Hardy Construction	1) 2) 3)
Electrical	Local Electric	1) 2) 3)
Plumbing	G&W Welborn	1) 2) 3)
Drywall	Sunrise Walls	1) 2) 3)
Glass	Alpha Omega	1) 2) 3)
Concrete	BNG Construction	1) 2) 3)

END OF SECTION

Attachment: Exhibit F - Collage Construction - 22-BG-06 Bid Proposal (2023-R-55 : Fire Station Construction)

SECTION 00 33 10
LISTING OF PREVIOUS EXPERIENCE

The bidder proposes that he/she is qualified to perform the referenced work and has successfully done so on recent projects similar in nature and size. A minimum of three (3) projects must be listed below. The Owner reserves the right to check references and confirm information provided herein.

NO.	PROJECT	OWNER	DESCRIPTION/COST	REFERENCE	DATE WORK STARTED & FINISHED MM/YR TO MM/YR
1	Westmonte Recreation Center	City of Altamonte Springs	$14,900,000	Steve Falk Altamonte Springs 4075718077	15 Months 01/18/2018 04/01/2019
2	Creative Village Park	The City of Orlando	5,300,000	Julio Alamo 400 S Orange Orlando, FL 4072463174	26 Months 10/27/2020 08/29/2022
3	Lake Lorna Doone Park	Florida Citrus Sports	7,000,000	Steve Hogan One Citrus Bowl Orlando, FL 4074232476	12 Months 5/21/2019 5/28/2020

END OF SECTION

Attachment: Exhibit F - Collage Construction - 22-BG-06 Bid Proposal (2023-R-55 : Fire Station Construction)

SECTION 00 47 00

SWORN STATEMENT UNDER SECTION 287.133(3)(a), FLORIDA STATUTES, ON PUBLIC ENTITY CRIMES:

This sworn statement is submitted with Bid, Proposal **or** Contract No. 22-BG-06 for The City of Holly Hill.

This sworn statement is submitted by Collage Design & Construction Group, Inc. whose business address is 585 Technology Park, Lake Mary, FL 32746 and (if applicable) its Federal Employer Identification Number (FEIN) is 59-2143889. (If the entity has no FEIN, include the Social Security Number of the individual signing this sworn statement: _____.)

My name is Stephen Pinyot any my relationship to the entity named above is Executive Vice President.

I understand that a "public entity crime" as defined in Paragraph 287.133(g), Florida Statutes, means a violation of any state or federal law by a person with respect to and directly related to the transaction of business with any public entity or with an agency or political subdivision of any other state or with the United States, including, but not limited to, any bid or contract for goods or services to be provided to any public entity or an agency or political subdivision of any other state or of the United States and involving antitrust, fraud, theft, bribery, collusion, racketeering, conspiracy, or material misrepresentation.

I understand that "convicted" or "conviction" as defined in Paragraph 287.133(i)(b), Florida Statutes, means a finding of guilt or a conviction of a public entity crime, with or without an adjudication of guilt, in any federal or state trial court of record relating to charges brought by indictment or information after July 1, 1989, as a result of a jury verdict, nonjury trial, or entry of a plea of guilty or nolo contenders.

I understand that an "affiliate" as defined in Paragraph **287.133(l)(a),** Florida Statutes, means:

1. A predecessor or successor of a person convicted of a public entity crime: or

2. An entity under the control of any natural person who is active in the management of the entity and who has been convicted of a public entity crime. The term "affiliate" includes those officers, directors, executives, partners, shareholders, employees, members, and agents who are active in the management of an affiliate. The ownership by one person of shares constituting a controlling interest in another person, or a pooling of equipment or income among persons when not for fair market value under an arm's length agreement,

Attachment: Exhibit F - Collage Construction - 22-BG-06 Bid Proposal (2023-R-55 : Fire Station Construction)

shall be a prima facie that one person controls another person. A person who knowingly enters into a joint venture with a
person who has been convicted of a public entity crime in Florida during the preceding 36 months shall be considered an affiliate.

I understand that a "person" as defined in Paragraph 287.133(i)(e), Florida Statutes, means any natural person or entity organized under the laws of any state or of the United States with the legal power to enter into a binding contract and which bids or applies to bid on contracts for the provision of goods or services let by a public entity, or which otherwise transacts or applies to transact business with a public entity. The term "person" includes those officers, directors, executives, partners, shareholders, employees, members, and agents who are active in management of an entity.

Based on information and belief, the statement which I have marked below is true in relation to the entity submitting this sworn statement. (Please indicate which statement applies).

Yes Neither the entity submitting this sworn statement, nor any officers, directors, executives, partners, shareholders, employees, members or agents who are active in management of the entity, nor any affiliate of the entity have been charged with and convicted of a public entity crime subsequent to July 1, 1989.

NO The entity submitting this sworn statement, or one or more of the officers, directors, executives, partners, shareholders, employees, members, or agents who are active in management of the entity, or an affiliate of the entity has been charged with and convicted of a public entity crime subsequent to July 1, 1989, AND (Please indicate which additional statement applies.)

NO There has been a proceeding concerning the conviction before a hearing officer of the State of Florida, Division of Administrative Hearings. The final order entered by the hearing officer did not place the person or affiliate on the convicted vendor list. (Please attach a copy of the final order.)

NO The person or affiliate was placed on the convicted vendor list. There has been a subsequent proceeding before a hearing officer of the State of Florida, Division of Administrative Hearings. The final order entered by the hearing officer determined that it was in the public interest to remove the person or affiliate from the convicted vendor list. (Please attach a copy of the final order).

Attachment: Exhibit F - Collage Construction - 22-BG-06 Bid Proposal (2023-R-55 : Fire Station Construction)

(Signature) _____ Date: 08/29/2023

State of Florida County of Seminole

PERSONALLY APPEARED BEFORE ME, the undersigned authority, _____ who, after first being sworn by me, affixed his/her signature in the space provided above on this 29th day of August, 2023.

_____
Notary Public

My Commission Expires:

ELIJAH LUKE WALSH
Notary Public - State of Florida
Commission # HH 225428
My Comm. Expires Feb 7, 2026
Bonded through National Notary Assn.

Attachment: Exhibit F - Collage Construction - 22-BG-06 Bid Proposal (2023-R-55 : Fire Station Construction)

SECTION 00 48 00
ANTI-COLLUSION STATEMENT

By signing this form, the bidder agrees that this is made without any other understanding, agreement, or connection with any person, corporation, or firm submitting a proposal for the same purpose and that the proposal is in all respects fair and without collusion or fraud.

SIGN in ink in the space provided below. Unsigned bids will be considered incomplete, and will be disqualified, and rejected.

IT IS AGREED BY THE UNDERSIGNED BIDDER THAT THE SIGNING AND DELIVERY OF THE BID REPRESENTS THE BIDDER'S ACCEPTANCE OF THE TERMS AND CONDITIONS OF THE FORGOING SPECIFICATIONS, CONTRACT AND PROVISIONS, AND IF AWARDED, THIS CONTRACT WILL REPRESENT THE AGREEMENT BETWEEN EACH OF THE GOVERNMENTAL PARTIES.

NAME OF FIRM: Collage Design & Construction Group, Inc.

SIGNED BY: _____

(MUST BE SIGNED BY A COMPANY OFFICER OR AUTHORIZED AGENT)

TITLE: Executive Vice President

ADDRESS: 585 Technology Park

CITY AND STATE: Lake Mary, FL 32746

TELEPHONE: 407-829-2257

COMPLETION TIME: August 29th, 2023 10:00am

NO proposals will be withdrawn for a period of ninety (90) days subsequent to the opening of the proposals, without the consent of the City of Holly Hill.

NO BID (REASON) _____

_____

_____

END OF SECTION

Attachment: Exhibit F - Collage Construction - 22-BG-06 Bid Proposal (2023-R-55 : Fire Station Construction)

SECTION 00 48 50
DRUG FREE/TIE PREFERENCE STATEMENT

In the event of a tie bid a preference is given to vendors submitting a certification with their bid/proposal certifying they have a drug-free workplace in accordance with Section 287.087, Florida Statutes. This requirement affects all public entities of the State and becomes effective January 1, 1991. The special conditions are as follow:

IDENTICAL TIE BIDS - Preference shall be given to businesses with drug-free workplace programs. Whenever two or more bids which are equal with respect to price, quality, and service are received by the State or by any political subdivision for the procurement of commodities or contractual services, a bid received from a business that certifies that it has implemented a drugfree workplace program shall be given preference in the award process. Established procedures for processing tie bids will be followed if none of the tied vendors have a drug-free workplace program. In order to have a drug-free workplace program, a business shall:

1. Publish a statement notifying employees that the unlawful manufacture, distribution, dispensing, possession, or use of a controlled substance is prohibited in the workplace and specifying the actions that will be taken against employees for violations of such prohibition.

2. Inform employees about the dangers of drug abuse in the workplace, the business's policy of maintaining a drug-free workplace, any available drug counseling, rehabilitation and employee assistance programs, and the penalties that may be imposed upon employees for drug abuse violations.

3. Give each employee engaged in providing the commodities or contractual services that are under bid a copy of the statement specified in subsection (1).

4. In the statement specified in subsection (1), notify the employees that, as a condition of working on the commodities or contractual services that are under bid, the employee will abide by the terms of the statement and will notify the employer of any conviction or, or plea of guilty or nolo contendere to, any violation of chapter 893 or of any controlled substance law of the United States or any state, for a violation occurring in the workplace no later than five (5) days after such conviction.

5. Impose a sanction on, or require the satisfaction participation in a drug abuse assistance or rehabilitation program if such is available in the employee's community, by any employee who is so convicted.

6. Make a good faith effort to continue to maintain a drug-free workplace through implementation of this section.

As the person authorized to sign the statement, I certify that this firm complies fully with the above requirements.

VENDOR'S SIGNATURE

END OF SECTION

Attachment: Exhibit F - Collage Construction - 22-BG-06 Bid Proposal (2023-R-55 : Fire Station Construction)

SECTION 00 48 60

COMPLIANCE WITH THE PUBLIC RECORDS LAW

Project Number: ITB # 22-BG-06

Upon award recommendation or ten (10) days after opening, submittals become "public records" and shall be subject to public disclosure consistent with Chapter 119, Florida Statutes. Proposers must invoke the exemptions to disclosure provided by law in the response to the solicitation, and must identify the data or other materials to be protected, and must state the reasons why such exclusion from public disclosure is necessary. The submission of a proposal authorizes release of your firm's credit data to the CITY.

If the company submits information exempt from public disclosure, the company must identify with specificity which pages/paragraphs of their bid/proposal package are exempt from the Public Records Act, identifying the specific exemption section that applies to each. The protected information must be submitted to the CITY in a separate envelope marked accordingly.

IF THE CONTRACTOR HAS QUESTIONS REGARDING THE APPLICATION OF CHAPTER 119, FLORIDA STATUTES, TO THE CONTRACTOR'S DUTY TO PROVIDE PUBLIC RECORDS RELATING TO THIS CONTRACT, CONTACT THE CUSTODIAN OF PUBLIC RECORDS AT

Valerie Manning, City Clerk
386-248-9441
vmanning@hollyhillfl.org
1065 Ridgewood Ave
Holly Hill, FL 32117

A provision that requires the contractor to comply with public records laws, specifically to:

1. Keep and maintain public records required by the public agency to perform the service.
2. Upon request from the public agency's custodian of public records, provide the public agency with a copy of the requested records or allow the records to be inspected or copied within a reasonable time at a cost that does not exceed the cost provided in this chapter or as otherwise provided by law.
3. Ensure that public records that are exempt or confidential and exempt from public records disclosure requirements are not disclosed except as authorized by law for the duration of the contract term and following completion of the contract if the contractor does not transfer the records to the public agency.
4. Upon completion of the contract, transfer, at no cost, to the public agency all public records in possession of the contractor or keep and maintain public records required by the public agency to perform the service. If the contractor transfers all public records to the public agency upon completion of the contract, the contractor shall destroy any duplicate public records that are exempt or confidential and exempt from public records disclosure requirements. If the contractor keeps and maintains public records upon completion of the contract, the contractor shall meet all applicable requirements for retaining public records. All records stored electronically must be provided to the public agency, upon request from the public agency's custodian of public records, in a format that is compatible with the information technology systems of the public agency.

By submitting a response to this solicitation, the company agrees to defend the CITY in the event we are forced to litigate the public records status of the company's documents.

Company Name: Collage Design & Construction Group, Inc.

Authorized representative (printed): Stephen Pinyot

Authorized representative (signature): _____

Date: August 29th, 2023

END OF SECTION

Attachment: Exhibit F - Collage Construction - 22-BG-06 Bid Proposal (2023-R-55 : Fire Station Construction)

Form **W-9**
(Rev. October 2018)
Department of the Treasury
Internal Revenue Service

Request for Taxpayer Identification Number and Certification

▶ Go to *www.irs.gov/FormW9* for instructions and the latest information.

Give Form to the requester. Do not send to the IRS.

Print or type. See Specific Instructions on page 3.

1 Name (as shown on your income tax return). Name is required on this line; do not leave this line blank.
Collage Design and Construction Group, Inc.

2 Business name/disregarded entity name, if different from above
The Collage Companies

3 Check appropriate box for federal tax classification of the person whose name is entered on line 1. Check only one of the following seven boxes.

☐ Individual/sole proprietor or single-member LLC ☐ C Corporation ☑ S Corporation ☐ Partnership ☐ Trust/estate

☐ Limited liability company. Enter the tax classification (C=C corporation, S=S corporation, P=Partnership) ▶ _____

Note: Check the appropriate box in the line above for the tax classification of the single-member owner. Do not check LLC if the LLC is classified as a single-member LLC that is disregarded from the owner unless the owner of the LLC is another LLC that is not disregarded from the owner for U.S. federal tax purposes. Otherwise, a single-member LLC that is disregarded from the owner should check the appropriate box for the tax classification of its owner.

☐ Other (see instructions) ▶

4 Exemptions (codes apply only to certain entities, not individuals; see instructions on page 3):

Exempt payee code (if any) _____

Exemption from FATCA reporting code (if any) _____

(Applies to accounts maintained outside the U.S.)

5 Address (number, street, and apt. or suite no.) See instructions.
585 Technology Park

Requester's name and address (optional)

6 City, state, and ZIP code
Lake Mary, Florida 32746

7 List account number(s) here (optional)

Part I Taxpayer Identification Number (TIN)

Enter your TIN in the appropriate box. The TIN provided must match the name given on line 1 to avoid backup withholding. For individuals, this is generally your social security number (SSN). However, for a resident alien, sole proprietor, or disregarded entity, see the instructions for Part I, later. For other entities, it is your employer identification number (EIN). If you do not have a number, see *How to get a TIN*, later.

Note: If the account is in more than one name, see the instructions for line 1. Also see *What Name and Number To Give the Requester* for guidelines on whose number to enter.

Social security number
[ ][ ][ ] - [ ][ ] - [ ][ ][ ][ ]

or

Employer identification number
5 9 – 2 1 4 3 8 8 9

Part II Certification

Under penalties of perjury, I certify that:

1. The number shown on this form is my correct taxpayer identification number (or I am waiting for a number to be issued to me); and
2. I am not subject to backup withholding because: (a) I am exempt from backup withholding, or (b) I have not been notified by the Internal Revenue Service (IRS) that I am subject to backup withholding as a result of a failure to report all interest or dividends, or (c) the IRS has notified me that I am no longer subject to backup withholding; and
3. I am a U.S. citizen or other U.S. person (defined below); and
4. The FATCA code(s) entered on this form (if any) indicating that I am exempt from FATCA reporting is correct.

Certification instructions. You must cross out item 2 above if you have been notified by the IRS that you are currently subject to backup withholding because you have failed to report all interest and dividends on your tax return. For real estate transactions, item 2 does not apply. For mortgage interest paid, acquisition or abandonment of secured property, cancellation of debt, contributions to an individual retirement arrangement (IRA), and generally, payments other than interest and dividends, you are not required to sign the certification, but you must provide your correct TIN. See the instructions for Part II, later.

Sign Here Signature of U.S. person ▶ [signature] Date ▶ August 25, 2023

General Instructions

Section references are to the Internal Revenue Code unless otherwise noted.

Future developments. For the latest information about developments related to Form W-9 and its instructions, such as legislation enacted after they were published, go to *www.irs.gov/FormW9*.

Purpose of Form

An individual or entity (Form W-9 requester) who is required to file an information return with the IRS must obtain your correct taxpayer identification number (TIN) which may be your social security number (SSN), individual taxpayer identification number (ITIN), adoption taxpayer identification number (ATIN), or employer identification number (EIN), to report on an information return the amount paid to you, or other amount reportable on an information return. Examples of information returns include, but are not limited to, the following.

- Form 1099-INT (interest earned or paid)
- Form 1099-DIV (dividends, including those from stocks or mutual funds)
- Form 1099-MISC (various types of income, prizes, awards, or gross proceeds)
- Form 1099-B (stock or mutual fund sales and certain other transactions by brokers)
- Form 1099-S (proceeds from real estate transactions)
- Form 1099-K (merchant card and third party network transactions)
- Form 1098 (home mortgage interest), 1098-E (student loan interest), 1098-T (tuition)
- Form 1099-C (canceled debt)
- Form 1099-A (acquisition or abandonment of secured property)

Use Form W-9 only if you are a U.S. person (including a resident alien), to provide your correct TIN.

If you do not return Form W-9 to the requester with a TIN, you might be subject to backup withholding. See What is backup withholding, *later.*

Attachment: Exhibit F - Collage Construction - 22-BG-06 Bid Proposal (2023-R-55 : Fire Station Construction)

By signing the filled-out form, you:

1. Certify that the TIN you are giving is correct (or you are waiting for a number to be issued),

2. Certify that you are not subject to backup withholding, or

3. Claim exemption from backup withholding if you are a U.S. exempt payee. If applicable, you are also certifying that as a U.S. person, your allocable share of any partnership income from a U.S. trade or business is not subject to the withholding tax on foreign partners' share of effectively connected income, and

4. Certify that FATCA code(s) entered on this form (if any) indicating that you are exempt from the FATCA reporting, is correct. See *What is FATCA reporting*, later, for further information.

Note: If you are a U.S. person and a requester gives you a form other than Form W-9 to request your TIN, you must use the requester's form if it is substantially similar to this Form W-9.

Definition of a U.S. person. For federal tax purposes, you are considered a U.S. person if you are:

- An individual who is a U.S. citizen or U.S. resident alien;
- A partnership, corporation, company, or association created or organized in the United States or under the laws of the United States;
- An estate (other than a foreign estate); or
- A domestic trust (as defined in Regulations section 301.7701-7)

Special rules for partnerships. Partnerships that conduct a trade or business in the United States are generally required to pay a withholding tax under section 1446 on any foreign partners' share of effectively connected taxable income from such business. Further, in certain cases where a Form W-9 has not been received, the rules under section 1446 require a partnership to presume that a partner is a foreign person, and pay the section 1446 withholding tax. Therefore, if you are a U.S. person that is a partner in a partnership conducting a trade or business in the United States, provide Form W-9 to the partnership to establish your U.S. status and avoid section 1446 withholding on your share of partnership income.

In the cases below, the following person must give Form W-9 to the partnership for purposes of establishing its U.S. status and avoiding withholding on its allocable share of net income from the partnership conducting a trade or business in the United States.

- In the case of a disregarded entity with a U.S. owner, the U.S. owner of the disregarded entity and not the entity;
- In the case of a grantor trust with a U.S. grantor or other U.S. owner, generally, the U.S. grantor or other U.S. owner of the grantor trust and not the trust; and
- In the case of a U.S. trust (other than a grantor trust), the U.S. trust (other than a grantor trust) and not the beneficiaries of the trust.

Foreign person. If you are a foreign person or the U.S. branch of a foreign bank that has elected to be treated as a U.S. person, do not use Form W-9. Instead, use the appropriate Form W-8 or Form 8233 (see Pub. 515, Withholding of Tax on Nonresident Aliens and Foreign Entities).

Nonresident alien who becomes a resident alien. Generally, only a nonresident alien individual may use the terms of a tax treaty to reduce or eliminate U.S. tax on certain types of income. However, most tax treaties contain a provision known as a "saving clause." Exceptions specified in the saving clause may permit an exemption from tax to continue for certain types of income even after the payee has otherwise become a U.S. resident alien for tax purposes.

If you are a U.S. resident alien who is relying on an exception contained in the saving clause of a tax treaty to claim an exemption from U.S. tax on certain types of income, you must attach a statement to Form W-9 that specifies the following five items.

1. The treaty country. Generally, this must be the same treaty under which you claimed exemption from tax as a nonresident alien.

2. The treaty article addressing the income.

3. The article number (or location) in the tax treaty that contains the saving clause and its exceptions.

4. The type and amount of income that qualifies for the exemption from tax.

5. Sufficient facts to justify the exemption from tax under the terms of the treaty article.

Example. Article 20 of the U.S.-China income tax treaty allows an exemption from tax for scholarship income received by a Chinese student temporarily present in the United States. Under U.S. law, this student will become a resident alien for tax purposes if his or her stay i the United States exceeds 5 calendar years. However, paragraph 2 of the first Protocol to the U.S.-China treaty (dated April 30, 1984) allows the provisions of Article 20 to continue to apply even after the Chinese student becomes a resident alien of the United States. A Chinese student who qualifies for this exception (under paragraph 2 of the first protocol) and is relying on this exception to claim an exemption from ta on his or her scholarship or fellowship income would attach to Form W-9 a statement that includes the information described above to support that exemption.

If you are a nonresident alien or a foreign entity, give the requester th appropriate completed Form W-9 or Form 8233.

Backup Withholding

What is backup withholding? Persons making certain payments to yo must under certain conditions withhold and pay to the IRS 24% of such payments. This is called "backup withholding." Payments that may be subject to backup withholding include interest, tax-exempt interest, dividends, broker and barter exchange transactions, rents, royalties, nonemployee pay, payments made in settlement of payment card and third party network transactions, and certain payments from fishing boa operators. Real estate transactions are not subject to backup withholding.

You will not be subject to backup withholding on payments you receive if you give the requester your correct TIN, make the proper certifications, and report all your taxable interest and dividends on your tax return.

Payments you receive will be subject to backup withholding if:

1. You do not furnish your TIN to the requester,

2. You do not certify your TIN when required (see the instructions for Part II for details),

3. The IRS tells the requester that you furnished an incorrect TIN,

4. The IRS tells you that you are subject to backup withholding because you did not report all your interest and dividends on your tax return (for reportable interest and dividends only), or

5. You do not certify to the requester that you are not subject to backup withholding under 4 above (for reportable interest and dividend accounts opened after 1983 only).

Certain payees and payments are exempt from backup withholding. See *Exempt payee code*, later, and the separate Instructions for the Requester of Form W-9 for more information.

Also see *Special rules for partnerships*, earlier.

What is FATCA Reporting?

The Foreign Account Tax Compliance Act (FATCA) requires a participating foreign financial institution to report all United States account holders that are specified United States persons. Certain payees are exempt from FATCA reporting. See *Exemption from FATCA reporting code*, later, and the Instructions for the Requester of Form W-9 for more information.

Updating Your Information

You must provide updated information to any person to whom you claimed to be an exempt payee if you are no longer an exempt payee and anticipate receiving reportable payments in the future from this person. For example, you may need to provide updated information if you are a C corporation that elects to be an S corporation, or if you no longer are tax exempt. In addition, you must furnish a new Form W-9 if the name or TIN changes for the account; for example, if the grantor of a grantor trust dies.

Penalties

Failure to furnish TIN. If you fail to furnish your correct TIN to a requester, you are subject to a penalty of $50 for each such failure unless your failure is due to reasonable cause and not to willful neglect.

Civil penalty for false information with respect to withholding. If you make a false statement with no reasonable basis that results in no backup withholding, you are subject to a $500 penalty.

Attachment: Exhibit F - Collage Construction - 22-BG-06 Bid Proposal (2023-R-55 : Fire Station Construction)

Criminal penalty for falsifying information. Willfully falsifying certifications or affirmations may subject you to criminal penalties including fines and/or imprisonment.

Misuse of TINs. If the requester discloses or uses TINs in violation of federal law, the requester may be subject to civil and criminal penalties.

Specific Instructions

Line 1

You must enter one of the following on this line; **do not** leave this line blank. The name should match the name on your tax return.

If this Form W-9 is for a joint account (other than an account maintained by a foreign financial institution (FFI)), list first, and then circle, the name of the person or entity whose number you entered in Part I of Form W-9. If you are providing Form W-9 to an FFI to document a joint account, each holder of the account that is a U.S. person must provide a Form W-9.

a. **Individual.** Generally, enter the name shown on your tax return. If you have changed your last name without informing the Social Security Administration (SSA) of the name change, enter your first name, the last name as shown on your social security card, and your new last name.

Note: ITIN applicant: Enter your individual name as it was entered on your Form W-7 application, line 1a. This should also be the same as the name you entered on the Form 1040/1040A/1040EZ you filed with your application.

b. **Sole proprietor or single-member LLC.** Enter your individual name as shown on your 1040/1040A/1040EZ on line 1. You may enter your business, trade, or "doing business as" (DBA) name on line 2.

c. **Partnership, LLC that is not a single-member LLC, C corporation, or S corporation.** Enter the entity's name as shown on the entity's tax return on line 1 and any business, trade, or DBA name on line 2.

d. **Other entities.** Enter your name as shown on required U.S. federal tax documents on line 1. This name should match the name shown on the charter or other legal document creating the entity. You may enter any business, trade, or DBA name on line 2.

e. **Disregarded entity.** For U.S. federal tax purposes, an entity that is disregarded as an entity separate from its owner is treated as a "disregarded entity." See Regulations section 301.7701-2(c)(2)(iii). Enter the owner's name on line 1. The name of the entity entered on line 1 should never be a disregarded entity. The name on line 1 should be the name shown on the income tax return on which the income should be reported. For example, if a foreign LLC that is treated as a disregarded entity for U.S. federal tax purposes has a single owner that is a U.S. person, the U.S. owner's name is required to be provided on line 1. If the direct owner of the entity is also a disregarded entity, enter the first owner that is not disregarded for federal tax purposes. Enter the disregarded entity's name on line 2, "Business name/disregarded entity name." If the owner of the disregarded entity is a foreign person, the owner must complete an appropriate Form W-8 instead of a Form W-9. This is the case even if the foreign person has a U.S. TIN.

Line 2

If you have a business name, trade name, DBA name, or disregarded entity name, you may enter it on line 2.

Line 3

Check the appropriate box on line 3 for the U.S. federal tax classification of the person whose name is entered on line 1. Check only one box on line 3.

IF the entity/person on line 1 is a(n) . . .	THEN check the box for . . .
• Corporation	Corporation
• Individual • Sole proprietorship, or • Single-member limited liability company (LLC) owned by an individual and disregarded for U.S. federal tax purposes.	Individual/sole proprietor or singl member LLC
• LLC treated as a partnership for U.S. federal tax purposes, • LLC that has filed Form 8832 or 2553 to be taxed as a corporation, or • LLC that is disregarded as an entity separate from its owner but the owner is another LLC that is not disregarded for U.S. federal tax purposes.	Limited liability company and ent the appropriate tax classification (P= Partnership; C= C corporatic or S= S corporation)
• Partnership	Partnership
• Trust/estate	Trust/estate

Line 4, Exemptions

If you are exempt from backup withholding and/or FATCA reporting, enter in the appropriate space on line 4 any code(s) that may apply to you.

Exempt payee code.

- Generally, individuals (including sole proprietors) are not exempt fro backup withholding.
- Except as provided below, corporations are exempt from backup withholding for certain payments, including interest and dividends.
- Corporations are not exempt from backup withholding for payments made in settlement of payment card or third party network transactions
- Corporations are not exempt from backup withholding with respect t attorneys' fees or gross proceeds paid to attorneys, and corporations that provide medical or health care services are not exempt with respe to payments reportable on Form 1095-MISC.

The following codes identify payees that are exempt from backup withholding. Enter the appropriate code in the space in line 4.

1—An organization exempt from tax under section 501(a), any IRA, or a custodial account under section 403(b)(7) if the account satisfies the requirements of section 401(f)(2)

2—The United States or any of its agencies or instrumentalities 3—

A state, the District of Columbia, a U.S. commonwealth or possession, or any of their political subdivisions or instrumentalities

4—A foreign government or any of its political subdivisions, agencies, or instrumentalities

5—A corporation

6—A dealer in securities or commodities required to register in the United States, the District of Columbia, or a U.S. commonwealth or possession

7—A futures commission merchant registered with the Commodity Futures Trading Commission

8—A real estate investment trust

9—An entity registered at all times during the tax year under the Investment Company Act of 1940

10—A common trust fund operated by a bank under section 584(a)

11—A financial institution

12—A middleman known in the investment community as a nominee o custodian

13—A trust exempt from tax under section 664 or described in section 4947

Attachment: Exhibit F - Collage Construction - 22-BG-06 Bid Proposal (2023-R-55 : Fire Station Construction)

The following chart shows types of payments that may be exempt from backup withholding. The chart applies to the exempt payees listed above, 1 through 13.

IF the payment is for . . .	THEN the payment is exempt for . . .
Interest and dividend payments	All exempt payees except for 7
Broker transactions	Exempt payees 1 through 4 and 6 through 11 and all C corporations S corporations must not enter an exempt payee code because they are exempt only for sales of noncovered securities acquired prior to 2012.
Barter exchange transactions and patronage dividends	Exempt payees 1 through 4
Payments over $600 required to be reported and direct sales over $5,000[1]	Generally, exempt payees 1 through 5[2]
Payments made in settlement of payment card or third party network transactions	Exempt payees 1 through 4

[1] See Form 1099-MISC, Miscellaneous Income, and its instructions.

[2] However, the following payments made to a corporation and reportable on Form 1099-MISC are not exempt from backup withholding: medical and health care payments, attorneys' fees, gross proceeds paid to an attorney reportable under section 6045(f), and payments for services paid by a federal executive agency.

Exemption from FATCA reporting code. The following codes identify payees that are exempt from reporting under FATCA. These codes apply to persons submitting this form for accounts maintained outside of the United States by certain foreign financial institutions. Therefore, if you are only submitting this form for an account you hold in the United States, you may leave this field blank. Consult with the person requesting this form if you are uncertain if the financial institution is subject to these requirements. A requester may indicate that a code is not required by providing you with a Form W-9 with "Not Applicable" (or any similar indication) written or printed on the line for a FATCA exemption code.

A—An organization exempt from tax under section 501(a) or any individual retirement plan as defined in section 7701(a)(37)

B—The United States or any of its agencies or instrumentalities C—

A state, the District of Columbia, a U.S. commonwealth or possession, or any of their political subdivisions or instrumentalities

D—A corporation the stock of which is regularly traded on one or more established securities markets, as described in Regulations section 1.1472-1(c)(1)(i)

E—A corporation that is a member of the same expanded affiliated group as a corporation described in Regulations section 1.1472-1(c)(1)(i)

F—A dealer in securities, commodities, or derivative financial instruments (including notional principal contracts, futures, forwards, and options) that is registered as such under the laws of the United States or any state

G—A real estate investment trust

H—A regulated investment company as defined in section 851 or an entity registered at all times during the tax year under the Investment Company Act of 1940

I—A common trust fund as defined in section 584(a) J—

A bank as defined in section 581

K—A broker

L—A trust exempt from tax under section 664 or described in section 4947(a)(1)

M—A tax exempt trust under a section 403(b) plan or section 457(g) plan

Note: You may wish to consult with the financial institution requesting this form to determine whether the FATCA code and/or exempt payee code should be completed.

Line 5

Enter your address (number, street, and apartment or suite number). This is where the requester of this Form W-9 will mail your information returns. If this address differs from the one the requester already has on file, write NEW at the top. If a new address is provided, there is still a chance the old address will be used until the payor changes your address in their records.

Line 6

Enter your city, state, and ZIP code.

Part I. Taxpayer Identification Number (TIN)

Enter your TIN in the appropriate box. If you are a resident alien and you do not have and are not eligible to get an SSN, your TIN is your IRS individual taxpayer identification number (ITIN). Enter it in the social security number box. If you do not have an ITIN, see *How to get a TIN* below.

If you are a sole proprietor and you have an EIN, you may enter either your SSN or EIN.

If you are a single-member LLC that is disregarded as an entity separate from its owner, enter the owner's SSN (or EIN, if the owner has one). Do not enter the disregarded entity's EIN. If the LLC is classified as a corporation or partnership, enter the entity's EIN.

Note: See *What Name and Number To Give the Requester*, later, for further clarification of name and TIN combinations.

How to get a TIN. If you do not have a TIN, apply for one immediately. To apply for an SSN, get Form SS-5, Application for a Social Security Card, from your local SSA office or get this form online at *www.SSA.gov*. You may also get this form by calling 1-800-772-1213. Use Form W-7, Application for IRS Individual Taxpayer Identification Number, to apply for an ITIN, or Form SS-4, Application for Employer Identification Number, to apply for an EIN. You can apply for an EIN online by accessing the IRS website at *www.irs.gov/Businesses* and clicking on Employer Identification Number (EIN) under Starting a Business. Go to *www.irs.gov/Forms* to view, download, or print Form W-7 and/or Form SS-4. Or, you can go to *www.irs.gov/OrderForms* to place an order and have Form W-7 and/or SS-4 mailed to you within 10 business days.

If you are asked to complete Form W-9 but do not have a TIN, apply for a TIN and write "Applied For" in the space for the TIN, sign and date the form, and give it to the requester. For interest and dividend payments, and certain payments made with respect to readily tradable instruments, generally you will have 60 days to get a TIN and give it to the requester before you are subject to backup withholding on payments. The 60-day rule does not apply to other types of payments. You will be subject to backup withholding on all such payments until you provide your TIN to the requester.

Note: Entering "Applied For" means that you have already applied for a TIN or that you intend to apply for one soon.

Caution: A disregarded U.S. entity that has a foreign owner must use the appropriate Form W-8.

Part II. Certification

To establish to the withholding agent that you are a U.S. person, or resident alien, sign Form W-9. You may be requested to sign by the withholding agent even if item 1, 4, or 5 below indicates otherwise.

For a joint account, only the person whose TIN is shown in Part I should sign (when required). In the case of a disregarded entity, the person identified on line 1 must sign. Exempt payees, see *Exempt payee code*, earlier.

Signature requirements. Complete the certification as indicated in items 1 through 5 below.

Attachment: Exhibit F - Collage Construction - 22-BG-06 Bid Proposal (2023-R-55 : Fire Station Construction)

1. Interest, dividend, and barter exchange accounts opened before 1984 and broker accounts considered active during 1983. You must give your correct TIN, but you do not have to sign the certification.

2. Interest, dividend, broker, and barter exchange accounts opened after 1983 and broker accounts considered inactive during 1983. You must sign the certification or backup withholding will apply. If you are subject to backup withholding and you are merely providing your correct TIN to the requester, you must cross out item 2 in the certification before signing the form.

3. Real estate transactions. You must sign the certification. You may cross out item 2 of the certification.

4. Other payments. You must give your correct TIN, but you do not have to sign the certification unless you have been notified that you have previously given an incorrect TIN. "Other payments" include payments made in the course of the requester's trade or business for rents, royalties, goods (other than bills for merchandise), medical and health care services (including payments to corporations), payments to a nonemployee for services, payments made in settlement of payment card and third party network transactions, payments to certain fishing boat crew members and fishermen, and gross proceeds paid to attorneys (including payments to corporations).

5. Mortgage interest paid by you, acquisition or abandonment of secured property, cancellation of debt, qualified tuition program payments (under section 529), ABLE accounts (under section 529A), IRA, Coverdell ESA, Archer MSA or HSA contributions or distributions, and pension distributions. You must give your correct TIN, but you do not have to sign the certification.

What Name and Number To Give the Requester

For this type of account:	Give name and SSN of:
1. Individual	The individual
2. Two or more individuals (joint account) other than an account maintained by an FFI	The actual owner of the account or, if combined funds, the first individual on the account[1]
3. Two or more U.S. persons (joint account maintained by an FFI)	Each holder of the account
4. Custodial account of a minor (Uniform Gift to Minors Act)	The minor[2]
5 a. The usual revocable savings trust (grantor is also trustee)	The grantor-trustee[1]
b. So-called trust account that is not a legal or valid trust under state law	The actual owner[1]
6. Sole proprietorship or disregarded entity owned by an individual	The owner[3]
7. Grantor trust filing under Optional Form 1099 Filing Method 1 (see Regulations section 1.671-4(b)(2)(i)(A))	The grantor[4]
For this type of account:	**Give name and EIN of:**
8. Disregarded entity not owned by an individual	The owner
9. A valid trust, estate, or pension trust	Legal entity[4]
10. Corporation or LLC electing corporate status on Form 8832 or Form 2553	The corporation
11. Association, club, religious, charitable, educational, or other tax-exempt organization	The organization
12. Partnership or multi-member LLC	The partnership
13. A broker or registered nominee	The broker or nominee
14. Account with the Department of Agriculture in the name of a public entity (such as a state or local government, school district, or prison) that receives agricultural program payments	The public entity
15. Grantor trust filing under the Form 1041 Filing Method or the Optional Form 1099 Filing Method 2 (see Regulations section 1.671-4(b)(2)(i)(B))	The trust

[1] List first and circle the name of the person whose number you furnish. If only one person on a joint account has an SSN, that person's number must be furnished.

[2] Circle the minor's name and furnish the minor's SSN.

[3] You must show your individual name and you may also enter your business or DBA name on the "Business name/disregarded entity" name line. You may use either your SSN or EIN (if you have one), but the IRS encourages you to use your SSN.

[4] List first and circle the name of the trust, estate, or pension trust. (Do not furnish the TIN of the personal representative or trustee unless the legal entity itself is not designated in the account title.) Also see *Special rules for partnerships*, earlier.

Note: The grantor also must provide a Form W-9 to trustee of trust.

Note: If no name is circled when more than one name is listed, the number will be considered to be that of the first name listed.

Secure Your Tax Records From Identity Theft

Identity theft occurs when someone uses your personal information such as your name, SSN, or other identifying information, without your permission, to commit fraud or other crimes. An identity thief may use your SSN to get a job or may file a tax return using your SSN to receive a refund.

To reduce your risk:

- Protect your SSN,
- Ensure your employer is protecting your SSN, and
- Be careful when choosing a tax preparer.

If your tax records are affected by identity theft and you receive a notice from the IRS, respond right away to the name and phone number printed on the IRS notice or letter.

If your tax records are not currently affected by identity theft but you think you are at risk due to a lost or stolen purse or wallet, questionable credit card activity or credit report, contact the IRS Identity Theft Hotline at 1-800-908-4490 or submit Form 14039.

For more information, see Pub. 5027, Identity Theft Information for Taxpayers.

Victims of identity theft who are experiencing economic harm or a systemic problem, or are seeking help in resolving tax problems that have not been resolved through normal channels, may be eligible for Taxpayer Advocate Service (TAS) assistance. You can reach TAS by calling the TAS toll-free case intake line at 1-877-777-4778 or TTY/TDD 1-800-829-4059.

Protect yourself from suspicious emails or phishing schemes. Phishing is the creation and use of email and websites designed to mimic legitimate business emails and websites. The most common act is sending an email to a user falsely claiming to be an established legitimate enterprise in an attempt to scam the user into surrendering private information that will be used for identity theft.

Attachment: Exhibit F - Collage Construction - 22-BG-06 Bid Proposal (2023-R-55 : Fire Station Construction)

The IRS does not initiate contacts with taxpayers via emails. Also, the IRS does not request personal detailed information through email or ask taxpayers for the PIN numbers, passwords, or similar secret access information for their credit card, bank, or other financial accounts.

If you receive an unsolicited email claiming to be from the IRS, forward this message to *phishing@irs.gov*. You may also report misuse of the IRS name, logo, or other IRS property to the Treasury Inspector General for Tax Administration (TIGTA) at 1-800-366-4484. You can forward suspicious emails to the Federal Trade Commission at *spam@uce.gov* or report them at *www.ftc.gov/complaint*. You can contact the FTC at *www.ftc.gov/idtheft* or 877-IDTHEFT (877-438-4338). If you have been the victim of identity theft, see *www.identitytheft.gov* and Pub. 5027.

Visit *www.irs.gov/IdentityTheft* to learn more about identity theft and how to reduce your risk.

Privacy Act Notice

Section 6109 of the Internal Revenue Code requires you to provide you correct TIN to persons (including federal agencies) who are required to file information returns with the IRS to report interest, dividends, or certain other income paid to you; mortgage interest you paid; the acquisition or abandonment of secured property; the cancellation of debt; or contributions you made to an IRA, Archer MSA, or HSA. The person collecting this form uses the information on the form to file information returns with the IRS, reporting the above information. Routine uses of this information include giving it to the Department of Justice for civil and criminal litigation and to cities, states, the District of Columbia, and U.S. commonwealths and possessions for use in administering their laws. The information also may be disclosed to other countries under a treaty, to federal and state agencies to enforce civil and criminal laws, or to federal law enforcement and intelligence agencies to combat terrorism. You must provide your TIN whether or not you are required to file a tax return. Under section 3406, payers must generally withhold a percentage of taxable interest, dividend, and certain other payments to a payee who does not give a TIN to the payer. Certain penalties may also apply for providing false or fraudulent information.

Attachment: Exhibit F - Collage Construction - 22-BG-06 Bid Proposal (2023-R-55 : Fire Station Construction)

END OF SECTION

SECTION 00 48 80

E-VERIFY COMPLIANCE

Affidavit of E-Verify Requirements
Compliance

ITB 22-BG-06

The Consultant/Contractor agrees to comply with Section 448.093, Florida Statutes, and to incorporate in all subcontracts the obligation to comply with Section 448.093, Florida Statutes.

1. The Consultant/Contractor shall utilize the U.S. Department of Homeland Security's E-Verify system to verify the employment eligibility of all new employees hired by the Consultant/Contractor during the term of the Agreement and shall expressly require any subcontractors performing work or providing services pursuant to the Agreement to likewise utilize the U.S. Department of Homeland Security's E-Verify system to verify the employment eligibility of all new employees hired by the subconsultant/subcontractor during the Agreement term.

2. That the Consultant/Contractor understands and agrees that its failure to comply with the verification requirements as set forth herein or its failure to ensure that all employees and subconsultant/subcontractors performing work under this Agreement are legally authorized to work in the United States and the State of Florida constitute a breach of this Agreement for which the City may immediately terminate the Agreement without notice and without penalty. The Consultant/Contractor further understands and agrees that in the event of such termination, the Consultant/Contractor shall be liable to the City for any costs incurred by the City as a result of the Consultant's/Contractor's breach

Consultant/Contractor shall execute and return the Affidavit of E-Verify Requirements Compliance to City. IN WITNESS WHEREOF, the parties have made and executed this Agreement for the purposes stated above.

Collage Design & Construction Group, Inc.

Consultant/Contractor Name and Address

Signature

Stephen Pinyot, Executive Vice Presiden

Name and Title

Attachment: Exhibit F - Collage Construction - 22-BG-06 Bid Proposal (2023-R-55 : Fire Station Construction)

SECTION 00 08 00A

CONTRACTORS STANDARD INSURANCE REQUIREMENTS AND INDEMNIFICATION CLAUSE

I. INSURANCE

A. Prior to commencing work, the Contractor shall provide at his own cost and expense insurance to the City of HOLLY HILL as required below. The insurance companies must be licensed in the State of Florida and be rated by A.M. Best as A: Class X or better. The required insurance shall be evidenced by certificates and/or policies as determined by the City. All policies and certificates of insurance shall be approved by the City prior to inception of any work.

B. It is required that each Certificate of Insurance and/or policy must give 30 days prior written notice of cancellation, non-renewal or adverse change to the City of HOLLY HILL Finance Department by registered mail, return receipt requested. All such notices shall name the Contractor and identify the contract number.

C. The "City of HOLLY HILL," wherever used, shall be defined to include the City itself, elected officials, officers, employees, volunteers, representatives, agents and any affiliates.

D. The "Contractor," wherever used, shall be defined to include the Contractor, any subsidiaries or affiliates, officers, employees, volunteers, representatives, agents, contractors and subcontractors.

E. If at any time any of the required policies shall be or shall become unsatisfactory to the City as to form or substance, or if the insurance company becomes unsatisfactory to the City, the Contractor shall, upon written notice to that effect from the City, promptly obtain a new policy, submit the policy to the City for approval, and submit the Certificate of Insurance, as previously required.

If at any time the Contractor shall fail to furnish and/or maintain the required insurance, this contract may be declared suspended, discontinued or terminated, at the discretion of the City. Failure of the Contractor to take out and/or maintain any of the required insurances shall not relieve the Contractor from any liability under the contract, nor shall the insurance requirements be construed to conflict with or otherwise limit the obligations of the Contractor concerning indemnification.

F. The Contractor is required to provide new Certificates of Insurance to the City at least 20 days prior to the coverage renewal dates. If any of the insurance requirements are not complied with at their renewal dates, the City may at their option, (1) withhold payments to the Contractor until those requirements have been met or, (2) pay the renewal premium and withhold such payments from any monies due the Contractor.

G. In the event of any claims having been filed due to any operation under this contract that are in excess of the insured amounts, the excess amount of such claim, or any portion thereof, may be withheld from payments due the Contractor until such time as the Contractor shall furnish such additional security covering such claims as may be determined by the City of HOLLY HILL

Attachment: Exhibit F - Collage Construction - 22-BG-06 Bid Proposal (2023-R-55 : Fire Station Construction)

H. The Contractor shall provide the following insurance on forms no more restrictive than the latest edition of those filed by the Insurance Services Office, and name the "City of HOLLY HILL" (as defined in "C" above) as an Insured to the extent of the City's interests.

II. LIABILITY INSURANCE

A. **WORKERS' COMPENSATION - STATUTORY** - in compliance with the Workers' Compensation law of the State of Florida including employers liability coverage of at least $100,000. If any operations are to be undertaken on or about navigable waters, coverage must be included for the U.S. Longshoremen and Harbor Workers Acts and Jones Act.

B. **COMMERCIAL GENERAL LIABILITY** - with minimum limits of:

$2,000,000	General Aggregate
$1,000,000	Products - Completed Operations Aggregate
$1,000,000	Personal and Advertisement Injury
$1,000,000	Each Occurrence
$ 100,000	Fire Damage

C. **BUSINESS AUTOMOBILE LIABILITY** - with minimum limits of $1,000,000 per occurrence combined single limit. This insurance shall include for bodily injury and property damages the following coverage's:

(1) Owned Automobiles

(2) Hired Automobiles

(3) Non-owned Automobiles

(4) Employee Non-ownership

NOTE! The required limits of liability for the above policies may include umbrella insurance with the umbrella policy making up the difference between the policy limits of the underlying policies and the total amount of coverage required. Such Umbrella Liability insurance shall be a "follow form" and be at least as broad as the underlying policies.

III. PROPERTY INSURANCE

When this contract includes construction of and/or additions to above-ground buildings or structures, Builder's Risk and/or Installation Floater policies must be provided as follows:

A. **BUILDER'S RISK** - "All risk" form in the amount of 100% of the completed value of such addition, building or structure to include personal property of others in the care, custody or control of the Contractor, and shall include a flat-premium endorsement.

Attachment: Exhibit F - Collage Construction - 22-BG-06 Bid Proposal (2023-R-55 : Fire Station Construction)

(1) Maximum Deductible - $5,000 each claim

(2) Certified Copy of the policy must be provided to the City prior to the commencement of work.

(3) Waiver of Occupancy Clause or Warranty - to provide that the Builder's Risk coverage will continue to apply until final acceptance by the City of the building or addition, regardless of any prior occupancy.

(4) Flood Insurance must be provided when buildings or structures are located within an identified special flood hazard area. The Flood Insurance must protect the interest of the City and be in the amount of the total insurable value of such building or structure, or the maximum amount of flood insurance coverage available under the National Flood program, whichever is the lesser.

(5) For additions or repairs of existing buildings or structures, the "Builder's Risk Completed Form" covering the Contractor's interest in improvements, repairs, additions, or alterations to completed buildings, shall be included.

(6) Bridges, Viaducts or similar structures - the "Bridge Builders Risk Form" - "All risk" contract with the flat-premium endorsement should be utilized.

B. **INSTALLATION FLOATER** - when the contract is for the installation of machinery and/or equipment into an existing structure, but does not contemplate construction of or addition to the structure itself.

(1) "All Risk" coverage to include transit and installation.

(2) Amount of Insurance - 100% of installed replacement cost value

(3) Maximum Deductible - $5,000 each claim.

(4) Cessation of Insurance - Coverage is to continue in force until final acceptance by the City.

(5) Certified Copy of the policy must be provided to the City prior to commencement of work.

(6) Flood Insurance - must be provided when machinery or equipment are located within an identified special flood hazard area. The Flood Insurance must protect the interest of the city and be in the amount of the total insurable value of such machinery or equipment.

IV. CERTIFICATE OF INSURANCE CLAUSES

All policies and Certificates of Insurance of the Contractor shall contain the following clauses and agreements:

Attachment: Exhibit F - Collage Construction - 22-BG-06 Bid Proposal (2023-R-55 : Fire Station Construction)

A. Insurers shall have no right of recovery or subrogation against the City of HOLLY HILL (as defined in "C" above), it being the intention of the parties that the insurance policies so effected shall protect both parties and be primary coverage for any and all losses covered by the above described insurance.

B. The clause "other insurance" in a policy in which the City of HOLLY HILL is named as an Insured shall not apply to the City of HOLLY HILL.

C. The insurance companies issuing the policies shall have no recourse against the City of HOLLY HILL (as defined in "C" above) for payment of any premiums or for assessments under any policy for insurance.

D. The contractor's insurer shall be requested to include a breach of warranty clause to prevent nullification of insurance because the Contractor breaches a condition of the policy.

E. Any and all deductibles in the above described insurance policies shall be assumed by and be for the account of, and at the sole risk of the Contractor.

F. Any loss payable under the Property Insurance, if any, is to be adjusted with and made payable to the City of HOLLY HILL, as their interest may appear.

V. CITY INDEMNIFICATION

The following Indemnification Agreement shall be a provision of this contract and also shall be endorsed onto or attached to the insurance policy and Certificate of Insurance:

"The Contractor agrees to protect, defend and pay on behalf of, and hold the City of HOLLY HILL and its elected officials, officers, employees, volunteers, representatives, agents and affiliates free and harmless from and against all claims for personal or bodily injury or death, or property damage or destruction of tangible property including loss of use thereof, losses, penalties, damages, settlements, costs, charges, professional fees or other expenses of every kind and character in connection with and arising directly or indirectly out of this agreement and/or performance thereof, unless such claims are a result of the City of HOLLY HILL's sole negligence. This indemnification clause includes claims made by the employees and subcontractors of the Contractor against the Owner and the Contractor hereby waives its entitlement, if any, to immunity under Section 440.11, Florida Statutes. Nothing contained herein shall be construed as a waiver of any immunity from or a limitation of liability the City may have under the doctrine of sovereign immunity or Chapter 768.28, Fla. Stat. This indemnification provision shall survive the completion of the project and shall be in full force and effect beyond the completion of the project or the termination of this contract.

Attachment: Exhibit F - Collage Construction - 22-BG-06 Bid Proposal (2023-R-55 : Fire Station Construction)

CITY OF HOLLY HILL, FLORIDA
INSURANCE REQUIREMENTS CHECKLIST
CITY OF HOLLY HILL, VOLUSIA COUNTY, FLORIDA

Items marked "X" must be provided

	General Liability		**Minimum Limits Required**	
X	Commercial General Liability		$ 2,000,000	General Aggregate
X	Occurrence Form		$ 1,000,000	Product/Completed Operations Agg.
___	_____		$ 1,000,000	Personal & Advertising Injury
___	_____		$ 1,000,000	Each Occurrence
___	_____		$ 100,000	Fire Damage Pump Stations
X	**Automobile Liability**			
	Owned, Hired & Non-Owned		$ 1,000,000	Combined Single Limit per Occurrence
X	**Worker's Compensation and**		Statutory	
	Employer's Liability		$ 100,000	Each Accident
			$ 500,000	Disease - Policy Limit
			$ 100,000	Disease - Each Employee
___	**Professional Liability - Errors & Omissions** (*To be completed by Bidder)			
	* Deductible: $_____		$_____	Aggregate *
	Claims Made (Y/N):_____		$_____	Each Claim
	*Occurrence (Y/N):			
	*Defense included in Limits (Y/N):			
X	**Builder's Risk/Installation Floater** (*To be completed by Bidder)			
	* Flood included $_____ Limit		$_____	100% of Completed or Installed Value, All-Risk Form
	* Transportation included $_____ Limit			
	* Storage included $_____ Limit			
	City must be a named insured. Copy of policy will be required.			
___	**Other**			
	_____		$	
	_____		$	

X The Certificate of Insurance must show "The City of HOLLY HILL, elected officials and employees" and the adjacent property owners as an additional insured.

X Certificates must give to the City of HOLLY HILL 30 days' prior written notice of cancellation, non-renewal, or adverse change.

X Certificates must identify bid number and bid title.

X A Wavier of Subrogation shall be provided to the City

Statement of Bidder:
We understand the requirements requested and agree to comply fully.

Bidder - Authorized Signature A complete copy of this form with original signature must accompany bid.

Attachment: Exhibit F - Collage Construction - 22-BG-06 Bid Proposal (2023-R-55 : Fire Station Construction)

CERTIFICATE OF LIABILITY INSURANCE

DATE (MM/DD/YYYY) 12/28/2022

THIS CERTIFICATE IS ISSUED AS A MATTER OF INFORMATION ONLY AND CONFERS NO RIGHTS UPON THE CERTIFICATE HOLDER. THIS CERTIFICATE DOES NOT AFFIRMATIVELY OR NEGATIVELY AMEND, EXTEND OR ALTER THE COVERAGE AFFORDED BY THE POLICIES BELOW. THIS CERTIFICATE OF INSURANCE DOES NOT CONSTITUTE A CONTRACT BETWEEN THE ISSUING INSURER(S), AUTHORIZED REPRESENTATIVE OR PRODUCER, AND THE CERTIFICATE HOLDER.

IMPORTANT: If the certificate holder is an ADDITIONAL INSURED, the policy(ies) must have ADDITIONAL INSURED provisions or be endorsed. If SUBROGATION IS WAIVED, subject to the terms and conditions of the policy, certain policies may require an endorsement. A statement on this certificate does not confer rights to the certificate holder in lieu of such endorsement(s).

PRODUCER
Sterling Seacrest Pritchard, Inc.
3111 W Dr Martin Luther King Jr Blvd
Suite 350
Tampa FL 33607

CONTACT NAME: Faridah Kanchwala
PHONE (A/C, No, Ext): 8134986272 **FAX (A/C, No):**
E-MAIL ADDRESS: fkanchwala@sspins.com

INSURED COLLDES-01
Collage Design and Construction Group, Inc.
585 Technology Park
Suite #100
Lake Mary FL 32746

INSURER(S) AFFORDING COVERAGE	NAIC #
INSURER A : AMERISURE INSURANCE COMPANY	19488
INSURER B : Amerisure Partners Insurance Company	11050
INSURER C : Amerisure Mutual Insurance Co	23396
INSURER D : SIRIUS INTL INS CORP	16820
INSURER E :	
INSURER F :	

COVERAGES **CERTIFICATE NUMBER:** 1672416988 **REVISION NUMBER:**

THIS IS TO CERTIFY THAT THE POLICIES OF INSURANCE LISTED BELOW HAVE BEEN ISSUED TO THE INSURED NAMED ABOVE FOR THE POLICY PERIOD INDICATED. NOTWITHSTANDING ANY REQUIREMENT, TERM OR CONDITION OF ANY CONTRACT OR OTHER DOCUMENT WITH RESPECT TO WHICH THIS CERTIFICATE MAY BE ISSUED OR MAY PERTAIN, THE INSURANCE AFFORDED BY THE POLICIES DESCRIBED HEREIN IS SUBJECT TO ALL THE TERMS, EXCLUSIONS AND CONDITIONS OF SUCH POLICIES. LIMITS SHOWN MAY HAVE BEEN REDUCED BY PAID CLAIMS.

INSR LTR	TYPE OF INSURANCE	ADDL INSD	SUBR WVD	POLICY NUMBER	POLICY EFF (MM/DD/YYYY)	POLICY EXP (MM/DD/YYYY)	LIMITS	
A	X COMMERCIAL GENERAL LIABILITY CLAIMS-MADE [X] OCCUR GEN'L AGGREGATE LIMIT APPLIES PER: POLICY [X] PRO-JECT [ ] LOC OTHER:			GL20156581901	1/1/2023	1/1/2024	EACH OCCURRENCE DAMAGE TO RENTED PREMISES (Ea occurrence) MED EXP (Any one person) PERSONAL & ADV INJURY GENERAL AGGREGATE PRODUCTS - COMP/OP AGG Employee Benefits	$ 1,000,000 $ 1,000,000 $ 10,000 $ 1,000,000 $ 2,000,000 $ 2,000,000 $ 1,000,000
B	AUTOMOBILE LIABILITY X ANY AUTO OWNED AUTOS ONLY X HIRED AUTOS ONLY SCHEDULED AUTOS X NON-OWNED AUTOS ONLY			CA13229012405	1/1/2023	1/1/2024	COMBINED SINGLE LIMIT Ea accident BODILY INJURY (Per person) BODILY INJURY (Per accident) PROPERTY DAMAGE Per accident Medical Payments	$ 1,000,000 $ $ $ $ 5,000
C	X UMBRELLA LIAB X OCCUR EXCESS LIAB CLAIMS-MADE DED RETENTION $			CU13229032302	1/1/2023	1/1/2024	EACH OCCURRENCE AGGREGATE	$ 10,000,000 $ 10,000,000 $
A	WORKERS COMPENSATION AND EMPLOYERS' LIABILITY ANY PROPRIETOR/PARTNER/EXECUTIVE OFFICER/MEMBER EXCLUDED? (Mandatory in NH) Y/N [ ] N/A If yes, describe under DESCRIPTION OF OPERATIONS below			WC13271272401	1/1/2023	1/1/2024	X PER STATUTE OTH-ER E.L. EACH ACCIDENT E.L. DISEASE - EA EMPLOYEE E.L. DISEASE - POLICY LIMIT	$ 1,000,000 $ 1,000,000 $ 1,000,000
D	Contractors Professional/ Pollution Liability			CPPLS00021391	1/1/2023	1/1/2024	Per Occurrence Aggregate Deductible	2,000,000 2,000,000 25,000

DESCRIPTION OF OPERATIONS / LOCATIONS / VEHICLES (ACORD 101, Additional Remarks Schedule, may be attached if more space is required)
When required by written contract, those parties listed in said contract, including the Certificate Holder, are added as an additional insured with respect to the General Liability, including ongoing and completed operations, Auto Liability and Umbrella Liability as afforded by the policy and/or endorsements. When required by written contract, Waiver of Subrogation is granted with respect to General Liability, Auto Liability, Workers Compensation and Umbrella Liability to those parties as listed in said contract, including the Certificate Holder. The General Liability, Auto Liability and Umbrella Liability certified herein are primary and non-contributory to other insurance available, but only to the extent required by written contract.

CERTIFICATE HOLDER

** SPECIMEN **
For Information Purposes Only
USA

CANCELLATION

SHOULD ANY OF THE ABOVE DESCRIBED POLICIES BE CANCELLED BEFORE THE EXPIRATION DATE THEREOF, NOTICE WILL BE DELIVERED IN ACCORDANCE WITH THE POLICY PROVISIONS.

AUTHORIZED REPRESENTATIVE

© 1988-2015 ACORD CORPORATION. All rights reserved.

Attachment: Exhibit F - Collage Construction - 22-BG-06 Bid Proposal (2023-R-55 : Fire Station Construction)

SECTION 00 30 00
PROPOSAL

FOR

CITY OF HOLLY HILL

FIRE STATION CONSTRUCTION

BID NO. 22-BG-06

(To be completed in Duplicate)

Bidder's Name: Paul Culver Construction, Inc

Submitted: August 29, 2023

City of Holly Hill
City Clerk
1065 Ridgewood Avenue
Holly Hill, FL 32117

To Whom it May Concern:

The undersigned, as Bidder, hereby declares that the only person or persons interested in the Proposal, as principal or principals, is or are named herein and that no other persons than herein mentioned has any interest in the Proposal or the Contract to which the work pertains; that this Proposal is made without connection or arrangement with any other person, company, or parties making a bid or proposal and that the Proposal is in all respects fair and made in good faith without collusion or fraud.

The Bidder further declares that he has examined the site of the work and that from personal knowledge and experience, or that he/she has made sufficient test holes and/or other subsurface investigations to fully satisfy self that such site is a correct and suitable one for this work and he/she assumes full responsibility therefore; that he/she is familiar with all legal requirements (Federal, State and local laws, ordinances, rules and regulations) pertaining to the Work; that he/she has examined the Drawings and Specifications for the work and from his/her own experience or from professional advice that the Drawings and Specifications are sufficient for the work to be done and he/she has examined the other Contract Documents and all addenda relating thereto, and that he/she has satisfied himself/herself fully, relative to all matters and conditions with respect to the work to which this Proposal pertains.

The Bidder proposes and agrees, if this Proposal is accepted, to contract with the City of Holly Hill, (Owner) in the form of contract specified, to furnish all necessary materials, equipment, machinery, tools, apparatus, transportation, and labor and to perform all work necessary to complete the Work

Attachment: Exhibit G - Paul Culver Construction - 22-BG-06 Bid Proposal (2023-R-55 : Fire Station Construction)

specified in the Proposal and other Contract Documents. The Bidder further proposes and agrees to comply in all respects with the time limits for commencement and completion of the Work as stated in the Contract Form.

The Bidder further agrees that the deductions for liquidated damages, as stated in the Contract Form, constitute fixed and agreed liquidated damages to reimburse the Owner for additional costs to the Owner resulting from the Work not being completed within the time limit stated in the Contract Form.

The undersigned agrees to accept as full compensation for completion of the project in full compliance with the Contract Documents, the unit prices for the items named in Section 00 31 00, Schedule of Unit Prices, submitted herein with this Proposal.

The undersigned offers to furnish all materials, equipment and labor for construction of,

FIRE STATION CONSTRUCTION

for the City of Holly Hill, Florida, complete in every respect in strict accordance with the drawings, specifications and any future changes therein. The Contractor shall perform these obligations for the prices listed in the "Schedule of Unit Prices: Section 00 31 00" attached and made a part of this Bid. **The bid total is:**

Three million Six Hundred ninety five thousand $00/100
(In Words)

Dollars $3,695,000.00 (In Figures)

COMPLETION TIME OF CONTRACT

The Contractor agrees that the work shall be started not later than the date indicated in the Notice to Proceed and that the total work shall be completed within **365 days.**

The Contractor further agrees that for each calendar day, with the exception of Sundays and legal holidays that any work shall remain uncompleted after the stations completion times stipulated above the sum of **$500 (Five Hundred Dollars)** per day shall be deducted from monies due the contractor, not as a penalty, but as liquidated damages. If the Contractor is declared in default in accordance with the provisions of the Specifications, liquidated damages shall be charged as provided herein, and such amounts shall be deducted from the final amount payable to the Contractor or his/her Surety. Should the total amount chargeable as liquidated damages exceed the amount due or payable to the Contractor or his/her Surety, then such excess shall be paid to the Owner by the Contractor or his/her Surety.

Attachment: Exhibit G - Paul Culver Construction - 22-BG-06 Bid Proposal (2023-R-55 : Fire Station Construction)

SUPPLEMENTAL REQUIREMENTS

The following documents are attached to and made a condition of this bid:

Schedule of Unit Prices: Section 00 31 00
Statement of Bidder's Qualifications: 00 32 00
Listing of Subcontractors: Section 00 33 00
Listing of Previous Experience: Section 00 33 10
Public Entity Crimes Statement: Section 00 47 00
Anti-Collusion Statement: Section 00 48 00
Drug Free/Tie Preference Statement: Section 00 48 50
Compliance with Public Records Law 00 48 60
W-9 Form 00 48 70
E-Verify Compliance 00 48 80
City of Holly Hill Insurance Requirements: Section 00 80 00A

REQUIRED DISCLOSURE

At its sole discretion, the City of Holly Hill, Florida may reject any bidder the City finds to lack, or whose present or former executive employees, officers, directors, stockholders, partners or owners are found by the City to lack honesty, integrity, or moral responsibility. The discretion of the City may be exercised based on the City's own investigation, public records, or any other reliable sources of information. By submitting a bid, bidder recognizes and accepts that the City may reject the bid based upon the exercise of its sole discretion and bidder waives any claim it might have for damages or other relief resulting from the rejection of its bid based on these grounds.

Attachment: Exhibit G - Paul Culver Construction - 22-BG-06 Bid Proposal (2023-R-55 : Fire Station Construction)

SECTION 00 31 00
SCHEDULE OF UNIT PRICES
CITY OF HOLLY HILL
FIRE STATION CONSTRUCTION
BID# 22-BG-06

PAUL CULVER CONSTRUCTION, INC.

Paul Culver Construction, Inc.
201 Osceola Avenue
Daytona Beach, FL 32114
386-763-4190 OFC
386-322-0007 FAX
407-810-8696 CELL
www.paulculverconstruction.com

BID SCHEDULE
FIRE STATION CONSTRUCTION
RESPONDENT

Site Work

NO	DESCRIPTION	UNIT	TOTAL PRICE
1	Site Sub Mobilization/Demolition/Site Preparation		$ 75,000.00
2	Earthwork		$ 65,000.00
3	Paving		$ 165,000.00
4	Drainage		$ 120,000.00
5	Water/Sewer/Miscellaneous Utilities		$ 155,000.00
6	Landscaping/Irrigation		$ 65,000.00
6A	Permanent Fencing		$ 15,500.00
6B	Flagpole		$ 6,500.00

Building

NO	DESCRIPTION	UNIT	TOTAL PRICE
7	GC Mobilization/Survey/Miscellaneous		$ 70,000.00
8	Supervision		$ 120,000.00
9	General Labor		$ 55,000.00
10	Building Layout/Preparation/Termite Treatment		$ 40,000.00
11	Concrete Work		$ 195,000.00
12	Masonry Work & Stone Panels		$ 190,000.00
13	Steel Framing / Roof Joists and Deck		$ 230,000.00
14	Lt. Ga. Trusses / Miscellaneous Lt. Ga. Exterior Framing		$ 110,000.00
15	Roof System Low Slope/Pitched w/ Insulation System		$ 235,000.00
16	Miscellaneous Framing/Sheeting/Decking/Flashing/Trim		$ 45,000.00
17	Ext. Air/Vapor/Water Sealing Masonry Walls		$ 35,000.00
18	Extant Doors/Hardware/Windows/Louvers		$ 240,000.00
19	Interior Framing/GWB System/Finishes		$ 100,000.00
20	Miscellaneous Insulation/Sealing		$ 10,000.00
21	Ceiling System/Finishes		$ 15,000.00
22	Floor System/Finishes		$ 110,000.00
23	Millwork System		$ 80,000.00
24	Miscellaneous Specialties/Accessories		$ 60,000.00

Services

NO	DESCRIPTION	UNIT	TOTAL PRICE
25	Plumbing/Gas System		$ 148,000.00
26	Fire Protection		$ 42,000.00
27	HVAC		$ 155,000.00
28	Electric System/IT System/Lightning Protection System		$ 380,000.00
29	Emergency Generator System		$ 50,000.00
30	Owner's Unforeseen Contingency Allowance		$ 20,000.00

Contractor Fees

NO	DESCRIPTION	UNIT	TOTAL PRICE
31	General Conditions/Overhead/Profit		$ 250,000.00
32	Performance/Payment Bond		$ 42,000.00
33	Permits/Fees (as required)		$ 1,000.00

Total Bid Cost: $ 3,695,000.00
(In Figures)

Total Bid Cost: THREE MILLION SIX HUNDRED NINETY-FIVE THOUSAND DOLLARS & 00/100's.....
(In Words)

Unit Pricing Add/Deduct

NO	DESCRIPTION	UNIT	UNIT COST
A	Import Fill for Site Work	CY	$ 15.00
B	Export Soil Removal from Site	CY	$ 9.50
C	Civil Site Concrete Work for Drive Areas and Sidewalks	CY	$ 385.00
D	Concrete Work in Above Slab Work Areas	CY	$ 535.00
E	Concrete for Slab and Foundation Work	CY	$ 500.00
F	Civil Site Concrete for Sidewalks	CY	$ 240.00

* The Unit Pricing Add/Deduct Section is for the establishment of unit prices in the event that change orders are required.

Submitted by: Paul Culver Construction, Inc
Contractor: Paul K. Culver
Address: 201 Osceola Ave. Daytona Beach, FL 32114
Telephone: Fax: 386-763-4190
State of Florida Certified General Contractor or Underground Contractor (Required Information)
Licensee: Paul K. Culver License No: CGC 059149

Attachment: Exhibit G - Paul Culver Construction - 22-BG-06 Bid Proposal (2023-R-55 : Fire Station Construction)

SECTION 00 31 00
SCHEDULE OF UNIT PRICES
CITY OF HOLLY HILL
FIRE STATION CONSTRUCTION
BID# 22-BG-06

PAUL CULVER CONSTRUCTION, INC.

Paul Culver Construction, Inc.
201 Osceola Avenue
Daytona Beach, FL 32114
386-763-4190 OFC
386-322-0007 FAX
407-810-8696 CELL
www.paulculverconstruction.com

BID SCHEDULE
FIRE STATION CONSTRUCTION
RESPONDENT

Site Work

NO	DESCRIPTION	UNIT	TOTAL PRICE
1	Site Sub Mobilization/Demolition/Site Preparation		$ 75,000.00
2	Earthwork		$ 65,000.00
3	Paving		$ 165,000.00
4	Drainage		$ 120,000.00
5	Water/Sewer/Miscellaneous Utilities		$ 155,000.00
6	Landscaping/Irrigation		$ 65,000.00
6A	Permanent Fencing		$ 15,500.00
6B	Flagpole		$ 6,500.00

Building

NO	DESCRIPTION	UNIT	TOTAL PRICE
7	GC Mobilization/Survey/Miscellaneous		$ 70,000.00
8	Supervision		$ 120,000.00
9	General Labor		$ 55,000.00
10	Building Layout/Preparation/Termite Treatment		$ 40,000.00
11	Concrete Work		$ 195,000.00
12	Masonry Work & Stone Panels		$ 190,000.00
13	Steel Framing / Roof Joists and Deck		$ 230,000.00
14	Lt. Ga. Trusses / Miscellaneous Lt. Ga. Exterior Framing		$ 110,000.00
15	Roof System Low Slope/Pitched w/ Insulation System		$ 235,000.00
16	Miscellaneous Framing/Sheeting/Decking/Flashing/Trim		$ 45,000.00
17	Ext. Air/Vapor/Water Sealing Masonry Walls		$ 35,000.00
18	Extant Doors/Hardware/Windows/Louvers		$ 240,000.00
19	Interior Framing/GWB System/Finishes		$ 100,000.00
20	Miscellaneous Insulation/Sealing		$ 10,000.00
21	Ceiling System/Finishes		$ 15,000.00
22	Floor System/Finishes		$ 110,000.00
23	Millwork System		$ 80,000.00
24	Miscellaneous Specialties/Accessories		$ 60,000.00

Services

NO	DESCRIPTION	UNIT	TOTAL PRICE
25	Plumbing/Gas System		$ 148,000.00
26	Fire Protection		$ 42,000.00
27	HVAC		$ 155,000.00
28	Electric System/IT System/Lightning Protection System		$ 380,000.00
29	Emergency Generator System		$ 50,000.00
30	Owner's Unforeseen Contingency Allowance		$ 20,000.00

Contractor Fees

NO	DESCRIPTION	UNIT	TOTAL PRICE
31	General Conditions/Overhead/Profit		$ 250,000.00
32	Performance/Payment Bond		$ 42,000.00
33	Permits/Fees (as required)		$ 1,000.00

Total Bid Cost: $ 3,695,000.00
(In Figures)

Total Bid Cost: THREE MILLION SIX HUNDRED NINETY-FIVE THOUSAND DOLLARS & 00/100's.....
(In Words)

Unit Pricing Add/Deduct

NO	DESCRIPTION	UNIT	UNIT COST
A	Import Fill for Site Work	CY	$ 15.00
B	Export Soil Removal from Site	CY	$ 9.50
C	Civil Site Concrete Work for Drive Areas and Sidewalks	CY	$ 385.00
D	Concrete Work in Above Slab Work Areas	CY	$ 535.00
E	Concrete for Slab and Foundation Work	CY	$ 500.00
F	Civil Site Concrete for Sidewalks	CY	$ 240.00

* The Unit Pricing Add/Deduct Section is for the establishment of unit prices in the event that change orders are required.

Submitted by: Paul Culver Construction, Inc
Contractor: Paul K. Culver
Address: 201 Osceola Ave. Daytona Beach, FL 32114
Telephone: Fax: 386-763-4190
State of Florida Certified General Contractor or Underground Contractor (Required Information)
Licensee: Paul K. Culver License No: CGC 059149

Attachment: Exhibit G - Paul Culver Construction - 22-BG-06 Bid Proposal (2023-R-55 : Fire Station Construction)

ACKNOWLEDGMENT OF ADDENDA

Addenda will be issued via email and it is the Bidder's responsibility to confirm that all addenda have been received prior to submitting a bid for the project. Acknowledgment is hereby made of the following Addenda received since issuance of Drawings and Specifications:

Addendum No. 1 Dated: 08-10-2023 Addendum No.Dated: 4-08-22-2023
Addendum No. 2 Dated: 08-15-2023 Addendum No.Dated: 5-08-24-2023
Addendum No. 3 Dated: 08-16-2023 Addendum No.Dated: 6-08-24-2023

Attached hereto is a cashier's check on the _____ Bank of
As per Solicitation Notification Reminder or Bid Bond for the sum of
Dated 08-24-2024 Dollars (_____),

made payable to _____ (Owner).

Paul Culver Construction, Inc.
(Name of Bidder) (Affix Seal)

(Signature of Officer)

Paul K. Culver, President
(Title of Officer)

Paul Culver Construction, Inc
Name of Bidder

201 Osceola Ave.,
Address

Daytona Beach, FL 32114
City/State/Zip

386-763-4190
Telephone

CGC059149
Contractor's Florida License Number

The full names and residences of persons and firms interested in the foregoing bid, as principals, are as follows:

Paul K. Culver, President
Kevin B. Flynn, Project Manager

END OF SECTION

Attachment: Exhibit G - Paul Culver Construction - 22-BG-06 Bid Proposal (2023-R-55 : Fire Station Construction)

THE AMERICAN INSTITUTE OF ARCHITECTS

AIA Document A310

Bid Bond

KNOW ALL MEN BY THESE PRESENTS, THAT WE Paul Culver Construction, Inc.
201 Osceola Avenue, Daytona Beach, FL 32114

as Principal, hereinafter called the Principal, and Great Midwest Insurance Company
800 Gessner, Suite 600, Houston, Texas 77024

a corporation duly organized under the laws of the State of Texas

as Surety, hereinafter called the Surety, are held and firmly bound unto City of Holly Hill
1065 Ridgewood Avenue, Holly Hill, Florida 32117

as Obligee, hereinafter called the Obligee, in the sum of -FIVE PERCENT (5%) OF PROPOSED BID-
Dollars ($ —5%—),
for the payment of which sum well and truly to be made, the said Principal and the said Surety, bind ourselves, our heirs, executors, administrators, successors and assigns, jointly and severally, firmly by these presents.

WHEREAS, the Principal has submitted a bid for Holly Hill Fire Station #96 Construction - Project No. 22-BG-06

NOW, THEREFORE, if the Obligee shall accept the bid of the Principal and the Principal shall enter into a Contract with the Obligee in accordance with the terms of such bid, and give such bond or bonds as may be specified in the bidding or Contract Documents with good and sufficient surety for the faithful performance of such Contract and for the prompt payment of labor and materials furnished in the prosecution thereof, or in the event of the failure of the Principal to enter such Contract and give such bond or bonds, if the Principal shall pay to the Obligee the difference not to exceed the penalty hereof between the amount specified in said bid and such larger amount for which the Obligee may in good faith contract with another party to perform the Work covered by said bid, then this obligation shall be null and void, otherwise to remain in full force and effect.

Signed and sealed this 29th day of August, 2023

Peta Moore
(Witness)

Paul Culver Construction, Inc.
(Principal) (Seal)
By: [signature]
(Title)

Natalie C. Demers
Natalie C. Demers (Witness)

Great Midwest Insurance Company
(Surety) (Seal)
By: Don Bramlage
Attorney-in-Fact Donald Bramlage (Title)
Inquiries: (407) 330-3990

GREAT MIDWEST INSURANCE COMPANY CORPORATE SEAL TEXAS CORPORATION

AIA DOCUMENT A310 ● BID BOND ● AIA ● FEBRUARY 1970 ED. ● THE AMERICAN INSTITUTE OF ARCHITECTS, 1735 N.Y. AVE., N.W., WASHINGTON, D.C. 20006

Attachment: Exhibit G - Paul Culver Construction - 22-BG-06 Bid Proposal (2023-R-55 : Fire Station Construction)

POWER OF ATTORNEY

Great Midwest Insurance Company

KNOW ALL MEN BY THESE PRESENTS, that **GREAT MIDWEST INSURANCE COMPANY**, a Texas Corporation, with its principal office in Houston, TX, does hereby constitute and appoint:

Dale A. Belis, Marilyn Ann Blome, Donald Bramlage, Edward M. Clark, Christian Collins, F. Danny Gann, David R. Hoover, Jarrett Merlucci, Laura D. Mosholder, Charles J. Nielson, Jessica P. Reno, Audria R. Ward, Edward T. Ward, Kevin Wojtowicz, Richard Zimmerman, Charles D. Nielson, Brett M. Rosenhaus

its true and lawful Attorney(s)-In-Fact to make, execute, seal and deliver for, and on its behalf as surety, any and all bonds, undertakings or other writings obligatory in nature of a bond.

This authority is made under and by the authority of a resolution which was passed by the Board of Directors of **GREAT MIDWEST INSURANCE COMPANY**, on the 1st day of October, 2018 as follows:

Resolved, that the President, or any officer, be and hereby is, authorized to appoint and empower any representative of the Company or other person or persons as Attorney-In-Fact to execute on behalf of the Company any bonds, undertakings, policies, contracts of indemnity or other writings obligatory in nature of a bond not to exceed Ten Million dollars ($10,000,000.00), which the Company might execute through its duly elected officers, and affix the seal of the Company thereto. Any said execution of such documents by an Attorney-In-Fact shall be as binding upon the Company as if they had been duly executed and acknowledged by the regularly elected officers of the Company. Any Attorney-In-Fact, so appointed, may be removed in the Company's sole discretion and the authority so granted may be revoked as specified in the Power of Attorney.

Resolved, that the signature of the President and the seal of the Company may be affixed by facsimile on any power of attorney granted, and the signature of the Secretary, and the seal of the Company may be affixed by facsimile to any certificate of any such power and any such power or certificate bearing such facsimile signature and seal shall be valid and binding on the Company. Any such power so executed and sealed and certificate so executed and sealed shall, with respect to any bond of undertaking to which it is attached, continue to be valid and binding on the Company.

IN WITNESS THEREOF, **GREAT MIDWEST INSURANCE COMPANY**, has caused this instrument to be signed by its President, and its Corporate Seal to be affixed this 11th day of February, 2021.

GREAT MIDWEST INSURANCE COMPANY — CORPORATE SEAL — TEXAS CORPORATION

GREAT MIDWEST INSURANCE COMPANY

BY _____
Mark W. Haushill
President

ACKNOWLEDGEMENT

On this 11th day of February, 2021, before me, personally came Mark W. Haushill to me known, who being duly sworn, did depose and say that he is the President of **GREAT MIDWEST INSURANCE COMPANY**, the corporation described in and which executed the above instrument; that he executed said instrument on behalf of the corporation by authority of his office under the By-laws of said corporation.

CHRISTINA BISHOP
Notary Public, State of Texas
Comm. Expires 04-14-2025
Notary ID 131090488

BY _____
Christina Bishop
Notary Public

CERTIFICATE

I, the undersigned, Secretary of **GREAT MIDWEST INSURANCE COMPANY**, A Texas Insurance Company, DO HEREBY CERTIFY that the original Power of Attorney of which the foregoing is a true and correct copy, is in full force and effect and has not been revoked and the resolutions as set forth are now in force.

Signed and Sealed at Houston, TX this 29th Day of August, 2023.

GREAT MIDWEST INSURANCE COMPANY — CORPORATE SEAL — TEXAS CORPORATION

GREAT MIDWEST INSURANCE COMPANY — CORPORATE SEAL — TEXAS CORPORATION

BY _____
Leslie K. Shaunty
Secretary

"WARNING: Any person who knowingly and with intent to defraud any insurance company or other person, files and application for insurance of claim containing any materially false information, or conceals for the purpose of misleading, information concerning any fact material thereto, commits a fraudulent insurance act, which is a crime and subjects such person to criminal and civil penalties.

Attachment: Exhibit G - Paul Culver Construction - 22-BG-06 Bid Proposal (2023-R-55 : Fire Station Construction)

SECTION *00 33 00*

The Bidder proposes that the following subcontractors are qualified to perform the referenced work and have successfully done so on recent projects similar in nature and size. Upon approval of subcontractors listed the successful bidder shall not substitute subcontractors without approval from the Architect.

SUBCONTRACTOR	COMPANY NAME	REFERENCE
Site	Drewy Construction	1) Dickerson Park 2) City of Daytona Beach 3)
HVAC	DG Meyer	1) Deer Park (4M) 2) Island Dr. (30M) 3) ERAU (1M)
Fire Protection	Mastercraft	1) Deer Park (4M) 2) Island Dr. (30M) 3) Erau (1 M)
Drywall / Framing	A & W Construction	1) Urban Air (5M) 2) Deer Park (4M) 3) Island Dr. (30M)
Glass & Glazing	Alpha Omega	1) Deer Park (5M) 2) Island Dr. (30M) 3) Urban Air (5M)
Structural Steel	Atlantic Central Ent.	1) Shelt Air (1.5M) 2) Deer Park (4M) 3) Urban Air (4M)

END OF SECTION

Attachment: Exhibit G - Paul Culver Construction - 22-BG-06 Bid Proposal (2023-R-55 : Fire Station Construction)

SECTION 00 32 00

STATEMENT OF BIDDER'S QUALIFICATIONS

All questions must be answered and the data given must be clear and comprehensive. This statement must be notarized. If necessary, questions may be answered on separate attached sheets. The bidder may submit any additional information he desires.

A. Name of bidder. Paul Culver Construction, Inc

B. Permanent main office address. 201 Osceola Ave, Daytona Beach, FL 32114

C. When organized. 02-2005

D. If a corporation, where incorporated. State of Florida

E. How many years have you been engaged in the contracting business under your present firm or trade name? Eighteen Years

F. Contracts on hand: (Schedule these, showing amount of each contract and the appropriate anticipated dates of completion.) Attached

G. General character of work performed by your company. General Contracting and Construction Management

H.(1) Have you ever failed to complete any work awarded to you? If so, where and why? NO

H.(2) Provide list of any lawsuits or judgments filed by or against your company in the last three years, indicating the nature and outcome. NONE

I. Have you ever defaulted on a contract? If so, where and why? NO

J. List the more important projects recently completed by your company, stating the approximate cost for each and the month and year completed.

K. List your major equipment Office Equipment, construction trailers and misc. tools

L. Experience in construction work similar in type to this project. Yes

M. Background and experience of the principal members of your organization, including the officers. See attached

N. Credit available: $ **Open Line of Credit $99,000.00**

Attachment: Exhibit G - Paul Culver Construction - 22-BG-06 Bid Proposal (2023-R-55 : Fire Station Construction)

O. Give bank reference: **Wells Fargo, Beville Rd., DB Gabriella Johnson 386-882-9611**

P. Will you, upon request, fill out a detailed financial statement and furnish any other information that may be required by the Owner? YES

Q. The undersigned hereby authorizes and requests any person, firm, or corporation to furnish any information requested by the Owner in verification of the recitals comprising this Statement of Bidder's Qualifications.

Dated at this 29th day of August, 2023.

Name of Bidder Paul Culver Construction, Inc,
By: Paul K. Culver, President
Title

State of Florida

County of Volusia

Paul K. Culver being duly sworn deposes and says

that he is the President of Paul Culver Construction, Inc and that

the answers to the City of Holly Hill foregoing questions
Name of Organization
and all statements therein contained are true and correct.

Subscribed and sworn to before me this 29th day of August, 20 23.

Notary Public

Reta Moore
Notary Public (Print or Type) My commission expires: 09-12-2026

RETA MOORE
Notary Public - State of Florida
Commission # HH 298033
My Comm. Expires Sep 12, 2026

Attachment: Exhibit G - Paul Culver Construction - 22-BG-06 Bid Proposal (2023-R-55 : Fire Station Construction)

PAUL CULVER CONSTRUCTION, INC.
QUALITY WORK BY SKILLED CRAFTSMEN. EST 2005.
License # CGC 059149

City of Holly Hill

Fire Station Construction
Bid No. 22-BG-06

Item F – Contracts on Hand

Attachment: Exhibit G - Paul Culver Construction - 22-BG-06 Bid Proposal (2023-R-55 : Fire Station Construction)

201 Osceola Avenue
Daytona Beach, FL 32114
paulculverconstruction.com
Ofc: (386) 763-4190
Fax: (386) 322-0007

Paul Culver Construction, Inc.
Contracts in Process
For the year ended June 30, 2023

Job #	Job	Adjusted Contract Price	Total Estimated Cost	Total Estimated Gross Profit	Actual Costs Incurred to Date	Estimated Costs to Complete	Estimated Percent Complete	Estimated Gross Profit Earned to Date	Actual Costs Incurred Plus Estimated Gross Profit	Total Billings to Date	Billings in Excess of Cost and Estimated Earnings
C21-021	Boylston Beach Approach	828,185	745,171	83,014	610,124	135,047	82%	67,970	678,094	651,195	-
C21-096	Palmer College of Chiro Stariway	185,654	150,108	35,546	32,281	117,827	22%	7,644	39,925	120,675	80,750
C22-030	Dickerson Community Center	1,316,067	1,279,000	37,067	1,278,867	133	100%	37,063	1,315,931	1,268,907	-
C22-038	Marine Science Center Bird Habitat	423,079	300,000	123,079	135,235	164,765	45%	55,482	190,717	105,971	-
C22-061	Lehigh Trailhead	1,912,298	1,761,835	150,463	813,333	948,502	46%	69,460	882,792	951,913	69,120
C22-075	Marine Science Center Aquarium	-									-
C22-086	Ormond Breakers Garage	1,089,683	1,063,240	26,443	126,403	936,837	12%	3,144	129,547	200,378	70,831
C22-087	World of Beer	1,283,000	1,189,000	94,000	182	1,188,818	0%	14	197		-
C22-091	Daisy Stocking Park	2,291,000	2,200,000	91,000	31,155	2,168,845	1%	1,289	32,444		-
C22-110	Sheltair	658,675	586,321	72,354	166,977	419,344	28%	20,606	187,583	182,167	-
C22-118	2400 Eustace Ave - Galaxy Bleacher	138,340	120,501	17,839	7,303	113,198	6%	1,081	8,384	-	-
C23-001	Heritage Middle School - Bleacher	136,000	118,463	17,537	7,439	111,024	6%	1,101	8,540		-
C23-014	Green Dragon Gannabis	369,600	329,600	40,000	34	329,566	0%	4	39		-
C23-021	Palmer College Lecture Room	87,071	78,364	8,707	7,965	70,398	10%	885	8,851	16,910	8,059
C23-029	CODB ADA Compliant Restrooms	99,775	87,908	11,867	1,195	86,713	1%	161	1,356		-
C23-037	Volusia Square Unit 401	98,000	85,605	12,395	795	84,810	1%	115	910		-
C23-052	Flagler Beah Club House Interior	53,508	44,590	8,918	795	43,795	2%	159	954		-
C23-061	500 Granada - Kava Culture	159,000	144,860	14,140		144,860	0%	-	-		-
C23-069	150 Magnolia - SMA Healthcare	73,440	63,440	10,000	1,985	61,455	3%	313	2,298		-
I20-025	2460 Old Moultrie	5,205,000	5,000,000	205,000	146,055	4,853,945	3%	5,988	152,043	146,280	-
I21-114	5524 Stewart St - Milton ID Build D	750,000	675,000	75,000	520,933	154,067	77%	57,881	578,814	668,068	89,253
I22-054	588 Strethaus -Ormond Beach ID Cardio	300,000	270,000	30,000	9,675	260,325	4%	1,075	10,750	18,000	7,250
I22-062	901 S Dixie Hwy - NSB ID	650,000	600,000	50,000	553,586	46,414	92%	46,132	599,718	510,219	-
I22-068	2435 US1 - St. Augustine ID	500,000	450,000	50,000	51,985	398,015	12%	5,776	57,762	57,888	127
I22-071	7625 SW 62nd Ct. - Ocala ID	1,500,000	1,000,000	500,000	117,058	882,942	12%	58,529	175,587	186,009	10,422
I23-019	4982 Palm Coast Pkwy Phase 2 - PC West ID	500,000	450,000	50,000	41,176	408,824	9%	4,575	45,752	60,826	15,074
I23-030	1114 St Rd 20 Interlachen ID	200,000	180,000	20,000	39,019	140,981	22%	4,335	43,354	77,192	33,838
R21-077	300 Lambert - Angrick	200,000	180,000	20,000	103,797	76,203	58%	11,533	115,330	108,033	-
R21-082	3393 N Oceanshore - Ehlen	1,260,394	1,162,694	97,700	69,364	1,093,330	6%	5,829	75,192	67,243	-
R22-024	5430 Sydney - Filjones	212,605	191,345	21,261	130,834	60,511	68%	14,537	145,371	107,312	-
[illegible]39	344 N 11th Ave- Motzel	770,177	703,177	67,000	24,509	678,668	3%	2,335	26,844	25,600	-
[illegible]92	7 Luguna - Diane Rossi	364,245	316,735	47,510	152,543	164,192	48%	22,881	175,425	164,073	-
[illegible]41	Paz Res	680,053	615,053	65,000	4,780	610,273	1%	505	5,285	-	-
		$ 24,294,850	$ 22,142,009	$ 2,152,840	$ 5,187,384	$ 16,954,626		$ 508,404	$ 5,695,788	$ 5,694,857	$ 384,725

Attachment: Exhibit G - Paul Culver Construction - 22-BG-06 Bid Proposal (2023-R-55 : Fire Station Construction)

PAUL CULVER CONSTRUCTION, INC.
QUALITY WORK BY SKILLED CRAFTSMEN. EST 2005.
License # CGC 059149

City of Holly Hill

Fire Station Construction
Bid No. 22-BG-06

Item – J

Section 00 33 10
Listing of Previous Experience

Attachment: Exhibit G - Paul Culver Construction - 22-BG-06 Bid Proposal (2023-R-55 : Fire Station Construction)

201 Osceola Avenue
Daytona Beach, FL 32114
paulculverconstruction.com
Ofc: (386) 763-4190
Fax: (386) 322-0007

Name of Project	Type of Work Performed	Contract Amount	Design Architect or EnginerName, Address, Phone & Email	Owner Name, Address, Phone & Email	Completed by own forces	Date of Completion
264 Palm Coast Parkway - Island Doctors	New Cardiology rooms	184,765	BPF Design Inc 207 Fairview Ave Daytona Beach, FL 32114 Phone: (386) 257-0502 Email: Bfredley@bpfdesign.com	Island Doctors Medical Group Dr. Roy Hinman 100 Arricola Ave St. Augustine, FL 32080 Phone: 904-866-9863 Email: dculver1234@aol.com	20	2022
Galaxy Middle School	Door Hardware Replacement	561,751	Hall & Ogle Architects, Inc. David Ogle, Architect 208 Magnolia Ave. Daytona Beach, FL 32114 Phone: 386-255-6163 Email: dogle@hoarchitects.com	Volusia County School Board 3750 Olson Dr. Daytona Beach, FL 32124 Phone: (386) 947-8786	20	2022
Pine Ridge High School	Bleacher Replacement	214,909	Hall & Ogle Architects, Inc. David Ogle, Architect 208 Magnolia Ave. Daytona Beach, FL 32114 Phone: 386-255-6163 Email: dogle@hoarchitects.com	Volusia County School Board 3750 Olson Dr. Daytona Beach, FL 32124 Phone: (386) 947-8786	20	2022
Atlantic High School	Bleacher Replacement	214,909	Hall & Ogle Architects, Inc. David Ogle, Architect 208 Magnolia Ave. Daytona Beach, FL 32114 Phone: 386-255-6163 Email: dogle@hoarchitects.com	Volusia County School Board 3750 Olson Dr. Daytona Beach, FL 32124 Phone: (386) 947-8786	20	2022
Beacon Center	Interior Remodel	277,282	E.J.S. Design/Consulting Inc 917 Pineapple Rd South Daytona, FL 32119 Phone:386-453-4341 Email: ejsdesign@earthlink.net	Beacon Center 1031 S Beach St. Daytona Beach, FL email: apye@mybeaconcenter.com Phone: 386-288-5486	20	2022
Ormond Beach Elementary Art Room	Art Room - Flooring, Ceiling and Lighting	125,000	Hall & Ogle Architects, Inc. David Ogle, Architect 208 Magnolia Ave. Daytona Beach, FL 32114 Phone: 386-255-6163 Email: dogle@hoarchitects.com	Volusia County School Board 3750 Olson Dr. Daytona Beach, FL 32124 Phone: (386) 947-8786	20	2022
Volusia Square EFIS Columns	Updated the EIFS Columns	63,250	N/A	Lamar Companies 695 Rt 46W, Suite 210 Fairfield, NJ 07004 email: Victoriap@lamarco.com Phone: 732-338-0016	20	2022
a Sqaure ADA Compliance	New Sidewalk & Handicap Parking	83,000	N/A	Lamar Companies 695 Rt 46W, Suite 210 Fairfield, NJ 07004 email: Victoriap@lamarco.com	20	2022

Attachment: Exhibit G - Paul Culver Construction - 22-BG-06 Bid Proposal (2023-R-55 : Fire Station Construction)

1344 E Vine - Kissimmee ID	New Cabinets	55,855	N/A	Island Doctors Medical Group Dr. Roy Hinman 100 Arricola Ave St. Augustine, FL 32080 Phone: 904-866-9863 Email: dculver1234@aol.com	20	2022
Halifax Health - Lohman Building Suite 40 & 50	Interior Remodel	156,761	FCA Architecture 1201 S Orlando Ave, Ste 300 Winter Park, FL 32789 Phone - 407-261-3200	Halifax Medical Center 303 N Clyde Morris Blvd Daytona Beach, FL 32114 email - bailey.wagner@halifax.org	20	2022
5524 Stewart St. - Milton ID	Build out new Medical Office	388,794	N/A	Island Doctors Medical Group Dr. Roy Hinman 100 Arricola Ave St. Augustine, FL 32080 Phone: 904-866-9863 Email: dculver1234@aol.com	20	2022
Atlantic High School	Concrete repair	16,925	N/A	School District of Volusia County 200 N Clara DeLand, FL 32720 rkelly0721@gmail.com	20	2022
Dahlia Park - Volusia County	New Park	1,138,848	Hall & Ogle Architects, Inc. David Ogle, Architect 208 Magnolia Ave. Daytona Beach, FL 32114 Phone: 386-255-6163 Email: dogle@hoarchitects.com	Coastal Division Construction Manager Department of Public Works County of Volusia 515 S. Atlantic Ave Daytona Beach, Florida 32118 Phone: (386) 248-8072 Ext. 20357 ncyzycki@volusia.org	20	2022
Edwin Peck Park - Volusia County	New Park	1,354,354	Hall & Ogle Architects, Inc. David Ogle, Architect 208 Magnolia Ave. Daytona Beach, FL 32114 Phone: 386-255-6163 Email: dogle@hoarchitects.com	Coastal Division Construction Manager Department of Public Works County of Volusia 515 S. Atlantic Ave Daytona Beach, Florida 32118 Phone: (386) 248-8072 Ext. 20357 ncyzycki@volusia.org	20	2022
1344 E Vine - Kissimmee ID	Build out new Medical Office	1,281,111	BPF Design, Inc. 207 Fairview Ave Daytona Beach, FL 3214 Phone: 386-257-0572 Email: bpfdesign@cfl.rr.com	Island Doctors Medical Group Dr. Roy Hinman 100 Arricola Ave St. Augustine, FL 32080 Phone: 904-866-9863 Email: dculver1234@aol.com	20	2022
rift Nova Rd a Beach, FL	Interioir Remodel	269,638	N/A	Mr. Daniel Warren Brook-Valley Management 4880 Valleydale Road Birmingham, AL 35242 Email: dwarren@brook-valley.com	80	2022
. Rd 20 - Interlachen ID	Build out new Medical Office	1,290,410	BPF Design, Inc.	Island Doctors Medical Group	20	2021

			207 Fairview Ave Daytona Beach, FL 3214 Phone: 386-257-0572 Email: bpfdesign@cfl.rr.com	Dr. Roy Hinman 100 Arricola Ave St. Augustine, FL 32080 Phone: 904-866-9863 Email: dculver1234@aol.com		
29 River Drive Monica Butera 29 River Drive Ormond Beach, FL 32176	New Home Build	242,512	Beachside Design Group Dale Schmlz 310 South Oceanshore Blvd Flagler Beach, FL Phone: 386-439-5700 Email: beachsideflagler@gmail.com	Monica Butera 29 River Drive Ormond Beach, FL 32176 pinklady6@live.com	20	2021
ERAU Paint Buildings 2359 & 2379 Embry-Riddle Aero University Attn: Accounts Payable 1 Aerospace Blvd Daytona Beach, FL 32114-3900	Painting Interior	95,000	N/A	Embry-Riddle Aero University 1 Aerospace Blvd Daytona Beach, FL 32114	20	2021
ERAU Drone Lab Embry-Riddle Aero University Attn: Accounts Payable 1 Aerospace Blvd Daytona Beach, FL 32114-3900	Drone Labe	404,560	Houseman Architecture LLC 931 S Semoran Blvd., #204B Winter Park, FL 32792 Phone: 321-972-8446	Embry-Riddle Aero University 1 Aerospace Blvd Daytona Beach, FL 32114 Chris Ziolkowski Phone: 386-226-6506 email: ziolkbed@erau.edu	20	2021
Palm Harbor Golf Clubhouse 20 Palm Harbor Dr. Palm Coast, FL 32164	Remodel Clubhouse	232,026	Mead and Hunt Architects 4401 Eastport Parkway Port Orange, FL 32127 Phone: 386-761-6810	City of Plam Coast 160 Lake Ave Palm Coast, FL 32164 Phone:386-986-2463 email: sknopf@palmcoastgov.com	20	2021
ERAU Landscape Improvement ICI Embry-Riddle Aero University Attn: Accounts Payable 1 Aerospace Blvd Daytona Beach, FL 32114-3900	Landscape improvement	38,760	N/A	Embry-Riddle Aero University 1 Aerospace Blvd Daytona Beach, FL 32114	20	2021
Volusia County EOC 3811 Tiger Bay Road Daytona Beach, FL	Plumbing Repairs	12,766	N/A	Volusia County EOC 3811 Tiger Bay Road Daytona Beach, FL	20	2021
Volusia County SOC 3811 Tiger Bay Road Daytona Beach, FL	New pavers	29,200	N/A	Volusia County SOC 3811 Tiger Bay Road Daytona Beach, FL email: payoung@volusia.org	100	2021
Halifax Ormond Pharmacy 1688 W Granada Blvd Ormond Beach, FL 32174	Remodel Existing Pharmacy	666,392	Fred M Humphrey & Associates Inc 1201 S Orlando Ave., Suite 300 Winter Park, FL, 32789 Phone: 407-261-3200	Halifax Medical Center 303 N Clyde Morris Blvd Daytona Beach, FL 32114 Email: John.Lavin@halifax.org	20	2021
ell Pool Martin Luther King Blvd a Beach, FL	Build a new Entry Pavillion	300,902	The City of Daytona Beach Public Works Department 950 Bellevue Ave Phone: 386-671-8610 email: cohenbrent@codb.us	The City of Daytona Beach Public Works Department 950 Bellevue Ave Phone:386-671-8610 email: cohenbrent@codb.us	20	2021
eerpark	New 18,000 sq ft manufacturing warehouse	3,479,211	Roy Williams Architect, Inc.	Roy Hinamn	20	2021

Elkton, FL			St. Augustine, FL 32086 Phone: (904) 422-8986 email: Rwarchitecturegroup@gmail.com	St. Augustine, FL 32080 Phone: 904-866-9863 Email: dculver1234@aol.com		
St. John's Plaza 4972-4996 NW Palm Coast Parkway Palm Coast, FL 32137	Store Front Renovations	617,924	Joseph Pozzuoli Architect 314 Moody Blvd Flager Beach, FL 32136 Phone:386-439-5650 Email: jpa@jpaflorida.com	Dr. Randy Baja St. Joe's Business Center 4 Old Hickory Drive Brooksville, NY 11545 rbaja@optionline.net	20	2021
Grand Haven Community Development 2 North Village Parkway Palm Coast, FL 32137	Corrido Ceilings Replacement	268,898	Brane Heck Architects, Inc Mike Richmond 606 N.E. First Street Gainesville, FL 32601 Phone: 352-372-0425 Email: m.richmond@braneheck.com Email: jpa@jpaflorida.com	Grand Haven Community Development Barry Kloptosky 2 North Village Drive Palm Coast, FL 32137 Phone: 386-447-1888 Email: bkloptosky@ghcdd.com	20	2021
2 North Village Parkway- Palm Coast, FL Grand Haven Community Development	Exterior Renovation	518,432	Brane Heck Architects, Inc Mike Richmond 606 N.E. First Street Gainesville, FL 32601 Phone: 352-372-0425 Email: m.richmond@braneheck.com Email: jpa@jpaflorida.com	Grand Haven Community Development Barry Kloptosky 2 North Village Drive Palm Coast, FL 32137 Phone: 386-447-1888 Email: bkloptosky@ghcdd.com	20	2020
Island Doctors-Naples FL Humana / Island Doctors	Build Out new Medical Office	679,256	Joseph Pozzuoli Architect 314 Moody Blvd Flager Beach, FL 32136 Phone:386-439-5650 Email: jpa@jpaflorida.com	Island Doctors Medical Gourp/Humana 2450 Vanderbilt Beach Rd Ste 200 & 200A Naples, FL 34109 Phone: 813-390-2658 Email: JCheatham4@humana.com	20	2020
City of Daytona Beach Peninsula Club Window Placement	Replacement of Windows Historical Building	432,518	The City of Daytona Beach Public Works Department Brent Cohen - Architect 950 Bellevue Ave Daytona Beach, FL 32114 Phone: 386-671-6810 Email: cohenbrent@codb.us	City of Daytona Beach 950 Bellevue Ave. # 600 Daytona Beach, FL 32114 Brent Cohen CohenBrtent@codb.us	20	2020
Mr. & Mrs. Kirk Shea New Residence 2 Wildwood Lane	3 Bedroom 2 Bath Home	264,275	Beachside Design Group Dale Schmlz 310 South Oceanshore Blvd Flagler Beach, FL Phone: 386-439-5700 Email: beachsideflagler@gmail.com	Mr. & Mrs. Kirk Shea 2 Wildwood Lane Palm Coast, FL 32137 Phone: 785-230-9184 Email: shea4X4@gmail.com Email: katashea1@gmail.com	20	2020
Island Doctors - Edgewater, FL	Build out - New Medical Office	449,889	BPF Design, Inc. 207 Fairview Ave Daytona Beach, FL 3214 Phone: 386-257-0572 Email: bpfdesign@cfl.rr.com	Island Doctors Medical Group Dr. Roy Hinman 100 Arricola Ave St. Augustine, FL 32080 Phone: 904-866-9863 Email: dculver1234@aol.com		
Embry Riddle Aeronautical University	Door Replacement Chanute Complex	93,971	N/A	Embry Riddle Aeronautical University Accounts Payable Department 1 Aerospace Boulevard Daytona Beach, FL 32114 Phone: 386-226-6252 Email: accounts.payable@erau.edu	100	2020
Doctors-Cape Coral / Island Doctors	Tenant Improvments	690,715	JPA Architecture Joseph Pozznoli 314 Moody Boulevard Flagler Beach, FL 32136 Phone: 386-439-5650 Email: jpa@jpaflorida.com	Island Doctors Medical Gourp/Humana Dr. Roy Hinman 100 Arricola Ave St. Augustine, FL. 32080 Phone: 904-866-9863 Email: dculver1234@aol.com	20	2020
Veterar						

Humana / Island Doctors			Joseph Pozznoli 314 Moody Boulevard Flagler Beach, FL 32136 Phone: 386-439-5650 Email: jpa@jpaflorida.com	David Culver, CEO 100 Arricola Ave St. Augustine, FL. 32080 Phone: 904-866-9863 Email: dculver1234@aol.com		
City of Daytona Beach Municipal Stadium Glass Replacement	Pressbox Glass Improvements	348,230	GRAEF - USA Scott D. Hinrichs, P.E. 2300 Maitland Center Parkway Suite 210 Maitland, Fl 32751-7411 Phone: 1-407-659-6500 Email: scott.hinrichs@www.graef-usa.com	City of Daytona Beach Joe Piper,Technical Services, PM Public Work, Daytona Beach Cell 772-708-8814 Phone: 386-671-8608 Email: PiperJoe@CODB.US	20	2019
County of Volusia Alterations to Fire Station 36	Interior & Exterior Improvements	813,182	Hall & Ogle Architects, Inc. David Ogle, Architect 208 Magnolia Ave. Daytona Beach, FL 32114 Phone: 386-255-6163 Email: dogle@hoarchitects.com	County of Volusia Gary Morton, Project Manager 123 W. Indiana Ave Deland, FL 32720-4262 Phone: (386) 736-5967 X13289 Email: GMorton@volusia.org	20	2019
County of Volusia Thomas C. Kelly Restroom Remodel	3rd Floor Restroom renovations	117,293	Hall & Ogle Architects, Inc. David Ogle, Architect 208 Magnolia Ave. Daytona Beach, FL 32114 Phone: 386-255-6163 Email: dogle@hoarchitects.com	County of Volusia José R. Alvarez Rolón ,PM 123 W. Indiana Ave Deland, FL 32720-4262 Phone: (386)248-1760 Email: JAlvarez@volusia.org	20	2019
Island Doctors Panama City Florida	Tenant Improvments	245,290	JPA Architecture Joseph Pozznoli 314 Moody Boulevard Flagler Beach, FL 32136 Phone: 386-439-5650 Email: jpa@jpaflorida.com	Island Doctors David Culver, CEO 100 Arricola Ave St. Augustine, FL. 32080 Phone: (904)866-9863 Email: dculver1234@aol.com	20	2019
City of Flagler Beach Maintenance Building Flagler Beach, FL	Addition to Maintenance Building	120,000	Mead and Hunt Architects Bernadette Fox 4401 Eastport Parkway Port Orange, FL 32127 386-414-5051 Email: bernadette.fox@meadhunt.com	City of Flagler Beach Fred Griffith 105 South Second Street Flagler Beach, FL 32137 Phone: (386) 517-2000 fgriffith@cityofflaglerbeach.com	20	2018
Phoenix East Aviation 201 Airport Road Bunnell, Florida	Interior/Exterior Renovations	564,491	JPA Architecture Joseph Pozznoli 314 Moody Boulevard Flagler Beach, FL 32136 Phone: 386-439-5650 Email: jpa@jpaflorida.com	Phoenix East Aviation John Bingham 201 Air Port Road Bunnell, FL Phone: 386-258-0706 Johnb@pea.com	20	2018
Humana Medical Interior Renovations 8011 Merrill Jacksonville, FL	Interior Renovations	213,191	JPA Architecture Joseph Pozznoli 314 Moody Boulevard Flagler Beach, FL 32136 Phone: 386-439-5650 Email: jpa@jpaflorida.com	Island Doctors David Culver, CEO 100 Arricola Ave St. Augustine, FL. 32080 Phone: (904)866-9863 Email: dculver1234@aol.com	20	2018
Humana Medical 9965 San Jose Blvd Jacksonville, FL	Interior Renovations	283,312	JPA Architecture Joseph Pozznoli 314 Moody Boulevard Flagler Beach, FL 32136 Phone: 386-439-5650 Email: jpa@jpaflorida.com	Island Doctors David Culver, CEO 100 Arricola Ave St. Augustine, FL. 32080 Phone: (904)866-9863 Email: dculver1234@aol.com	20	2018
Hammock Community Church Addition [illegible]oast, Florida	Addition to Hammock Community Church	338,405	JPA Architecture Joseph Pozznoli 314 Moody Boulevard Flagler Beach, FL 32136 Phone: 386-439-5650 Email: jpa@jpaflorida.com	Hammock Community Church 5299 South Ocean Shore Bvd Palm Coast, FL 32163 Phone: 386-445-6467 Email: hammockchurch@gmail.com	22	2018
[illegible]a Medical 2[illegible]ormick Drive F[illegible]oast, FL	Interior Renovations	275,499	JPA Architecture Joseph Pozznoli 314 Moody Boulevard Flagler Beach, FL 32136	Island Doctors David Culver, CEO 100 Arricola Ave St. Augustine, FL. 32080	20	2017

PAUL CULVER CONSTRUCTION, INC.

QUALITY WORK BY SKILLED CRAFTSMEN. EST 2005.
License # CGC 059149

DICKERSON COMMUNITY CENTER IMPROVEMENTS

1	Contracted Name of Owner:	City of Daytona Beach
2	Owners Representative Name:	David Waller, Deputy Public
3	Address:	950 Bellevue Ave., Daytona Beach, FL 32115
	Email:	veenstramark@codb.us
	Phone:	386-671-8681
	Key Personnel assigned to the project	Paul K. Culver Kevin B. Flynn
4	Construction Delivery Method:	GC
5	Scope of Services:	Completion of improvements of the Community Center Landscape and Site
6	Owner's Construction Budget:	$1,100,000.00
7	Negotiated Guaranteed Maximum Price to Include All Change Orders:	$1,336,291.40
8	Number of Change Orders	9
	Change Order increase of decrease amount	$1,336,291.40
	Reason for Change order	Owner requested increased scope of work
9	Contracted Substantial Date	07/05/2023
	Contracted Final Completion Date	08/05/2023
10	Actual Completion Date	07/14/2023

The Dickerson Center improvements consisted of the Construction of new Basketball Court, Concrete Sidewalk, Fencing, Landscape, Lighting Improvements, Playground with Seat Wall.





Attachment: Exhibit G - Paul Culver Construction - 22-BG-06 Bid Proposal (2023-R-55 : Fire Station Construction)

PAUL CULVER CONSTRUCTION, INC.

QUALITY WORK BY SKILLED CRAFTSMEN. EST 2005.
License # CGC 059149

EMBRY RIDDLE AERONAUTIAL UNIVERSITY
DRONE LAB
(Education Building)

1	Contracted Name of Owner:	Embry Riddle Aeronautical University
2	Owners Representative Name:	Chris Ziolkowski, CEFP 1 Aerospace Boulevard, Daytona Beach, FL
3	Address:	32114
	Email:	ziolkbed@erau.edu
	Phone:	386-956-5154
	Key Personnel Assigned to the Project:	Paul K. Culver Kevin B. Flynn
4	Construction Delivery Method:	GC
5	Scope of Services:	Construction of Drone Lab for Embry Riddle Aeronautical University.
6	Owner's Construction Budget:	$367,365.00
7	Negotiated Guaranteed Maximum Price to Include All Change Orders:	$402,538.71
8	Number of Change Orders:	1
	Change Order Increase or Decrease Amount:	$35,173.71
	Reason for Change Order:	Increased scope of work
9	Contracted Substantial Date:	October 05, 2021
	Contracted Final Completion Date:	October 05, 2021
10	Actual Completion Date:	October 05, 2021
11	Permitted Design Capacity	1,935 SF

Embry Riddle Aeronautical University Drone Lab project consisted of a complete demo of an existing space with complete interior improvements/remodel. This demolition/remodel consisted of many trades including electrical, HVAC, and finishes. This project consisted of many specialty items such as Monterey Bi-Fold Nano Walls, Structural Framing for the Nano Walls, Infinity Countertops, Armstrong Woodworks Maple Ceiling, Modular Art Wall Panels, along with Nocturne Nimbus Motor Shades. New VAVs and Trane Controls were installed.





Attachment: Exhibit G - Paul Culver Construction - 22-BG-06 Bid Proposal (2023-R-55 : Fire Station Construction)

PAUL CULVER CONSTRUCTION, INC.
QUALITY WORK BY SKILLED CRAFTSMEN. EST 2005.
License # CGC 059149

URBAN AIR ADVENTURE PARK – Roof Lift / Tenant Improvements

1	Contracted Name of Owner:	Urban Air Adventure Park
2	Owners Representative Name:	Richard Afolabi
3	Address:	2350 Airport Freeway, Suite 505, Bedford, TX 76022
	Email:	richard.afolabi@gmail.com
	Phone:	281-710-5959
	Key Personnel assigned to the project:	Paul K. Culver & Kevin B. Flynn
4	Construction Delivery Method:	GC
5	Scope of Services:	Roof Lift & Interior Improvements
6	Owner's Construction Budget:	$4,659,500
7	Negotiated Guaranteed Maximum Price to Include All Change Orders:	Lump Sum Project
8	Number of Change Orders:	4
	Change Order Increase or Decrease Amount:	$167,250
	Reason for Change Order:	Owner requested scope changes
9	Contracted Substantial Date:	March 31, 2023
	Contracted Final Completion Date:	April 14, 2023
10	Actual Completion Date:	April 14, 2023
11	Permitted Design Capacity	55,000 SF

Urban Air Adventure Park Project consisted of raising 55,000 SF of the existing roof 5'-4" to accommodate the specialty indoor attractions. The tenant improvements phase consisted of completing the interior build out per Urban Air standards including Health Department and State of Florida Attraction Inspections.

The Urban Air Adventure Park project tasked PCC with receiving, assembling, constructing and having inspected fourteen attractions which were fabricated in Italy and China. This required concise coordination and scheduling with multiple Urban Air Vendors from around the globe.





Attachment: Exhibit G - Paul Culver Construction - 22-BG-06 Bid Proposal (2023-R-55 : Fire Station Construction)

PAUL CULVER CONSTRUCTION, INC.
QUALITY WORK BY SKILLED CRAFTSMEN. EST 2005.
License # CGC 059149

ISLAND DOCTORS / HUMANA CLINICS

1	Contracted Name of Owner:	Island Doctors Humana Medical Clinics
2	Owners Representative Name:	Dr. Roy H. Hinman, II
3	Address:	100 Arricola Ave., St. Augustine FL 32080
	Email:	islanddocs@aol.com
	Phone:	904-806-3737
	Key Personnel assigned to the project:	Paul K. Culver & Kevin B. Flynn
4	Construction Delivery Method:	Construction Management / GC
5	Scope of Services:	Interior Build Out, Ground Up Construction of Multiple Doctor's Office
6	Owner's Construction Budget:	Cost Plus Negotiated Fee
7	Negotiated Guaranteed Maximum Price to Include All Change Orders:	$20,000,000.00
8	Number of Change Orders:	NA
	Change Order Increase or Decrease Amount:	NA
	Reason for Change Order:	NA
9	Contracted Substantial Date:	2007 to Current
	Contracted Final Completion Date:	In Process
10	Actual Completion Date:	In Process
11	Permitted Design Capacity	56 Clinics from 2,163 SF – 16,560 Totaling 254,000 SF of Medical Offices

Island Doctors / Humana has teamed up with Paul Culver Construction as their Construction Manager since 2007. During this period, PCC has completed $38 Million in work for Island Doctors / Humana constructing facilities all over Florida and into Georgia and Alabama.

These Construction Management projects have been fundamental to Paul Culver Construction's experience and knowledge base.





Attachment: Exhibit G - Paul Culver Construction - 22-BG-06 Bid Proposal (2023-R-55 : Fire Station Construction)

PAUL CULVER CONSTRUCTION, INC.
QUALITY WORK BY SKILLED CRAFTSMEN. EST 2005.
License # CGC 059149

ADDITIONS & ALTERATIONS - TO FIRE STATION #36

1	Contracted Name of Owner:	County of Volusia
2	Owners Representative Name:	David Ogle
3	Address:	208 Magnolia Ave., Daytona Beach, FL 32114
	Email:	dogle@hoarchitects.com
	Phone:	386-255-6163
	Key Personnel assigned to the project:	Paul K. Culver & Kevin B. Flynn
4	Construction Delivery Method:	GC
5	Scope of Services:	Interior & Exterior Improvements
6	Owner's Construction Budget:	$765,578.00
7	Negotiated Guaranteed Maximum Price to Include All Change Orders:	$813,182.63
8	Number of Change Orders:	2
	Change Order Increase or Decrease Amount:	$62,603.78
	Reason for Change Order:	Owner requested scope changes
9	Contracted Substantial Date:	May 12, 2019
	Contracted Final Completion Date:	June 12, 2019
10	Actual Completion Date:	June 12, 2019
11	Permitted Design Capacity	1,530 SF

Fire Station #36 required Paul Culver Construction's expertise in competing the demolition of the existing Fire Station, expansion and construction of the new apparatus bays, dispatch center, gym, sleeping quarters, power & low voltage wiring, mechanical systems and finishes for a complete project in accordance with all local state and federal codes.





Attachment: Exhibit G - Paul Culver Construction - 22-BG-06 Bid Proposal (2023-R-55 : Fire Station Construction)

PAUL CULVER CONSTRUCTION, INC.
QUALITY WORK BY SKILLED CRAFTSMEN. EST 2005.
License # CGC 059149

PHOENIX EAST AVIATION

1	Contracted Name of Owner:	Phoenix East Aviation Flight School
2	Owners Representative Name:	John Bigham / Brendan Bozzuto
3	Address:	Airport Road, Bunnell, Florida
	Email:	johnb@pea.com / brendanb@pea.com
	Phone:	860-417-8955
	Key Personnel Assigned to the Project:	Paul K. Culver Kevin B. Flynn
4	Construction Delivery Method:	GC
5	Scope of Services:	Completed 6,000 SF Aviation Flight School, accelerated construction schedule- turning the project over to owner 45 days ahead of schedule
6	Owner's Construction Budget:	$493,608.00
7	Negotiated Guaranteed Maximum Price to Include all change orders:	$552,962.00
8	Number of Change Orders:	2
	Change Order Increase or Decrease Amount:	$34,25400
	Reason for Change Order:	Additional Work Requested by Owner
9	Contracted Substantial Date:	06-2018
	Contracted Final Completion Date:	06-2018
10	Actual Completion Date:	06-2018

This project expanded Paul Culver Construction's experience of working on an accelerated schedule and being successful in delivering the project ahead of schedule. Although we were ahead of sched we ensured the quality of the project remained.



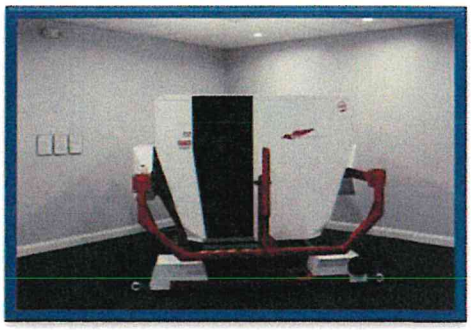

Attachment: Exhibit G - Paul Culver Construction - 22-BG-06 Bid Proposal (2023-R-55 : Fire Station Construction)

PAUL CULVER CONSTRUCTION, INC.

QUALITY WORK BY SKILLED CRAFTSMEN. EST 2005.
License # CGC 059149

DAHLIA PARK

1	Contracted Name of Owner:	County of Volusia
2	Owners Representative Name:	David Ogle, Architect
3	Address:	208 Magnolia Ave., DB, FL 32114
	Email:	dogle@hoarchitects.com
	Phone:	386-255-6163
	Key Personnel Assigned to the Project:	Paul K. Culver Kevin B. Flynn
4	Construction Delivery Method:	GC
5	Scope of Services:	Completion of Beachside Park with Beach Access
6	Owner's Construction Budget:	$990,000.00
7	Negotiated Guaranteed Maximum Price to Include All Change Orders:	$1,138,847.61
8	Number of Change Orders:	2
	Change Order Increase or Decrease Amount:	$148,847.61
	Reason for Change Order:	Increased scope of work to install owner supplied equipment
9	Contracted Substantial Date:	----------
	Contracted Final Completion Date:	03-15-2022
10	Actual Completion Date:	03-15-2022

Dahlia Park enhanced Paul Culver Construction's experience with the construction of a park and working with the required environmental aspects.



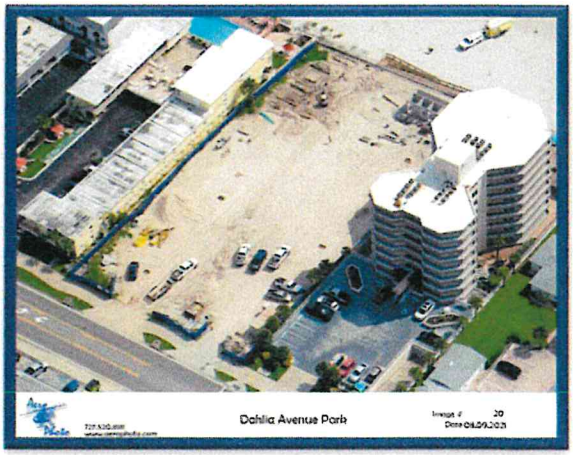

Attachment: Exhibit G - Paul Culver Construction - 22-BG-06 Bid Proposal (2023-R-55 : Fire Station Construction)

PAUL CULVER CONSTRUCTION, INC.
QUALITY WORK BY SKILLED CRAFTSMEN. EST 2005.
License # CGC 059149

PECK PARK

1	Contracted Name of Owner:	County of Volusia
2	Owners Representative Name:	David Ogle, Architect
3	Address:	208 Magnolia Ave., DB, FL 32114
	Email:	dogle@hoarchitects.com
	Phone:	386-255-6163
	Key Personnel assigned to the project	Paul K. Culver Kevin B. Flynn
4	Construction Delivery Method:	GC
5	Scope of Services:	Completion of Beachside Park with Beach Access
6	Owner's Construction Budget:	$1,249,000.00
7	Negotiated Guaranteed Maximum Price to Include All Change Orders:	$1362,502.43
8	Number of Change Orders	2
	Change Order increase of decrease amount	$113,502.43
	Reason for Change order	Increased scope of work, installed owner supplied equipment
9	Contracted Substantial Date	11-12-2021
	Contracted Final Completion Date	03-15-2022
10	Actual Completion Date	03-15-2022

Like Dahlia Park, Peck Park also continued to enhance Paul Culver Construction's experience with the sensitive construction of a park incorporating the required environmental considerations into construction.



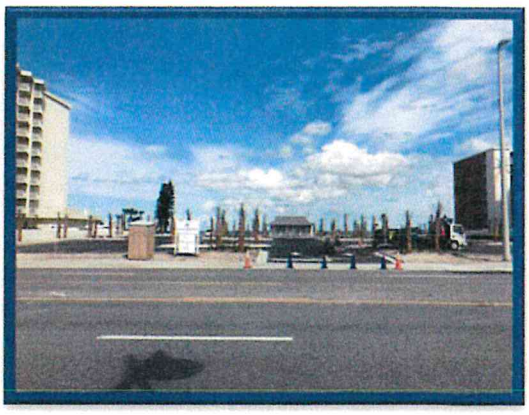

Attachment: Exhibit G - Paul Culver Construction - 22-BG-06 Bid Proposal (2023-R-55 : Fire Station Construction)

PAUL CULVER CONSTRUCTION, INC.
QUALITY WORK BY SKILLED CRAFTSMEN. EST 2005.
License # CGC 059149

City of Holly Hill

Fire Station Construction
Bid No. 22-BG-06

Item – M
Background and Experience of Team

Attachment: Exhibit G - Paul Culver Construction - 22-BG-06 Bid Proposal (2023-R-55 : Fire Station Construction)

201 Osceola Avenue
Daytona Beach, FL 32114
paulculverconstruction.com
Ofc: (386) 763-4190
Fax: (386) 322-0007

PAUL CULVER CONSTRUCTION, INC.

QUALITY WORK BY SKILLED CRAFTSMEN. EST 2005.
License # CGC 059149



Company:
Paul Culver Construction, Inc
2005 – Present

Education:
Father Lopez High School
Daytona State College
Construction Estimating
Construction Scheduling
Legal Aspect in Construction
Construction Cost Analysis
Financial Control

Active Licenses/Accreditations:
State of Florida Certified
General Contractor, #CGC0159149
LEED Accredited

Years of Experience:
39 Years of Construction

Previous Employer(s):
Hall Construction Co., Inc.
1984 – 2001
Laborer, Carpenter
Superintendent
Project Manager – Estimator

Location:
Mr. Culver resides in
Daytona Beach and reports
to the PCC Daytona Beach Office

Name: **Paul K. Culver**

Title/Role: **President, Project Manager**

Duties Include:

- Responsible for project management and all aspects of project administration.
- Oversees project coordinators, project administrators, purchasing and accounting.
- Negotiates subcontracts and purchase orders for projects.
- Oversees all elements of company operations.

Firm's Project Experience:

- Volusia County - Boylston Beach Approach $829,000.00
- Volusia County - Edwin Peck Park $1,400,000.00
- Volusia County - Dahlia Avenue Park $1,300,000.00
- GC/CM Island Doctors, Florida, Mississippi, Alabama $38,000,000
- GC/CM Preform, LLC 18,000 sq. ft. manufacturing warehouse $3,400,000.00
- City of Daytona Beach, Municipal Stadium, Peninsula Club, (Historical Building) Campbell Pool Project $1,085,648.00
- Grand Haven Village $784,864.00
- Phoenix East Aviation Flight School $700,000.00
- Volusia County (Thomas Kelly Restroom Remodel) $117,290.00
- Volusia County (Alteration to Fire Station 96) Osteen, FL $813,182.00
- Hammock Community Church Alterations, Palm Coast, FL $338,405.00

Individuals' Project Experience:

- City of Port Orange City Hall
- Barnett Bank of America – Port Orange
- Barnett Bank of America – Palm Coast
- Edgewater Elementary School Addition
- Inlet Harbor Restaurant
- White Chapel Church of God
- LPGA Cart Bank
- LPGA Club House
- Comfort Inn – Gainesville, FL
- Central Baptist Church
- South Daytona Pigott Center
- West Navy Medical Center – Pensacola, FL
- Patriot Medical – Alabama & Mississippi
- Alpha Probe Stem Cell Research Lab – St. Augustine, FL
- Blue Water Medical – West Palm Bach & Delray Beach, FL

201 Osceola Avenue
Daytona Beach, FL 32114

paulculverconstruction.com

Ofc: (386) 763-4190
Fax: (386) 322-0007

Attachment: Exhibit G - Paul Culver Construction - 22-BG-06 Bid Proposal (2023-R-55 : Fire Station Construction)

PAUL CULVER CONSTRUCTION, INC.

QUALITY WORK BY SKILLED CRAFTSMEN. EST 2005.
License # CGC 059149

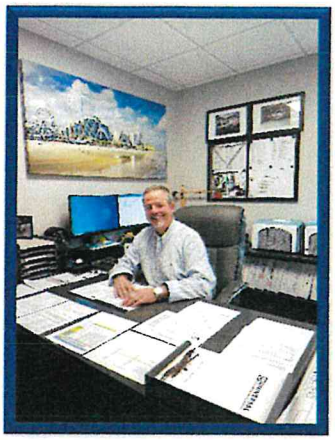

Company:
Paul Culver Construction, Inc.
2017 - Present

Education:
Memphis State University
1982-1987
Construction Management

Previous Employer(s):
Kevin Flynn Construction, Inc.
Owner – PM 2013-2017

Belz Construction Company, Inc.
Tenant Coordinator/PM 1981 - 2012

Years of Experience:
42 years of Construction

5-Years with Paul Culver Construction

Location:
Mr. Flynn resides in DeLand and reports to the PCC Daytona Beach Office

Name: **Kevin B. Flynn**

Title/Role: **Project Manager – Chief Estimator**

Duties Include:

- Responsible for project management for all phases of construction.
- Prepares and maintains CPM project schedules.
- Provides input and reviews project schedules weekly for feasibility, sequence, and possible improvement.
- Dictates project pace and ensures progress is maintained throughout the course of construction.
- Conducts site safety training.
- Conducts safety meetings and follow-up.
- Oversees and implements quality control program for projects.
- Coordinates internal resources and vendors for the flawless execution of projects.
- Ensures that all projects are delivered on-time, within scope and within budget.
- Develops detailed project plans to monitor and track progress.

Significant Projects List:

- Volusia County - Boylston Beach Approach ($829,000.00)
- Volusia County - Edwin Peck Park ($1,400,000.00)
- Volusia County - Dahlia Avenue Park ($1,300,000.00)
- GC/CM Island Doctors Medical Clinics - Florida, Mississippi, Alabama ($5,000,000.00)
- Embry Riddle Aeronautical University - Drone Lab ($632,000.00)
- Halifax Health Ormond Pharmacy Renovation ($666,392.00)
- City of Daytona Beach - Municipal Stadium, Peninsula Club, (Historical Building) Campbell Pool Project, Dickerson Park ($2,500,000.00)
- Phoenix East Aviation - Flight School ($700,000.00)
- Volusia County - Fire Station 36 Alterations ($813,182.00)
- St. Joe's Plaza – Façade Renovations (575,000.00)
- Cape Coral Island Doctors/Humana ($690,715.00)
- Port Charlotte Island Doctors/Humana ($591,910.00)
- Naples Island Doctors/Humana ($679,256.00)
- Deerpark Industrial (Preform, LLC) – ($3,404,210.00)
- City of Ormond Beach Facility Hardening ($1,004,000.00)
- Urban Air Adventure Park & Roof Raise ($4,625,910.00)

Attachment: Exhibit G - Paul Culver Construction - 22-BG-06 Bid Proposal (2023-R-55 : Fire Station Construction)

201 Osceola Avenue
Daytona Beach, FL 32114

paulculverconstruction.com

Ofc: (386) 763-4190
Fax: (386) 322-0007

PAUL CULVER CONSTRUCTION, INC.

QUALITY WORK BY SKILLED CRAFTSMEN. EST 2005.
License # CGC 059149



Name: **David Strom**

Title/Role: **Project Superintendent**

Duties Include:

- Responsible for project supervision
- Responsible for all field administration, scheduling, and material procurement
- Field responsibility for safety compliance, and quality control
- On-site recordkeeping, RFI's, red-lined drawings, scheduling, and coordination with subcontractors

David Strom became an employee of Paul Culver Construction, Inc. in 2021. Mr. Strom and Paul Culver worked as a team for approximately 7 years while at Hall Construction. Mr. Strom has successfully completed many Fire Station Projects as the Project Superintendent. Mr. Strom & Mr. Culver have completed many commercial projects as a team for the below:

- The Museum of Arts and Sciences
- Stewart Marchman projects; the Vince Carter Sanctuary.
- Volusia County School Board Projects
- Volusia County Fire Stations
- City of Ormond Beach

Significant Projects List:

- Boylston Beach Approach – Volusia
  Total Project Cost: $829,000
- Beacon Center Interior Remodel
  Total Project Cost: $277,282

Individual Project List:

- 2019-2020 First Baptist Church of Daytona Beach Phase 1 - 10,154 SF Ground Up. / Phase 2 – 20,720 SF Ground Up.
  Total Project Cost: $8,217,573.00
- 2010 Fire Station #94 Ormond Beach
  Renovation of Fire Sprinkler & Truck Bay Ventilators
  Total Project Cost: $200,000
- 2006 Town of Ponce Inlet Fire Station Renovation
  Total Project Cost: $310,915
- 2005 Fire Station #91 Ormond Beach, Ground Up
  Total Project Cost: $1,293,592
- 2004 Fire Station #92 Ormond Beach, Ground Up
  Total Project Cost: $1,330,785

Company:
Paul Culver Construction, Inc.
2021 - Present

Education:
Aledo High School 1984
High School Diploma

Previous Employer(s):
Hall Construction, Inc.
1989 – 01/2021

Interest and Activities:
Create scale models replicas of construction equipment. Purchase and rebuild Farmall Tractors. Participate in collector events around the USA

Location:
Mr. Strom is located in Holly Hill

201 Osceola Avenue
Daytona Beach, FL 32114

paulculverconstruction.com

Ofc: (386) 763-4190
Fax: (386) 322-0007

Attachment: Exhibit G - Paul Culver Construction - 22-BG-06 Bid Proposal (2023-R-55 : Fire Station Construction)

PAUL CULVER CONSTRUCTION, INC.

QUALITY WORK BY SKILLED CRAFTSMEN. EST 2005.
License # CGC 059149



Company:
Paul Culver Construction, Inc.
2019 - Present

Skills:
Made 2 Management
Peach Tree
Quick Books
Microsoft Office

Years of Experience:
46 Years

Previous Employer(s):
Advanced Manufacturing & Power Systems 2017-2019
FloMet LLC DeLand 2012-2017

Market Leverage Interactive Advertising 2008-2011

Location:
Ms. Pacholsky is located in DeLand and reports to the PCC Daytona Beach Office

Name: **Rose (Arlene) Pacholsky**

Title/Role: **Office Manager / Human Resources / Project Accounting**

Duties Include:

- Enhances the organization's human resources by planning, implementing, and evaluating employee relations and human resources policies, programs, and practices.
- Maintains the work structure by updating job requirements and job descriptions for all positions.
- Supports organization staff by establishing a recruiting, testing, and interviewing program; counseling managers on candidate selection; conduction and analyzing exit interviews; and recommending changes.
- Prepares employees for assignments by establishing and conduction orientation and training programs.
- Manages a pay plan by conduction periodic pay surveys scheduling and condition job evaluations preparing pay budgets; monitoring and scheduling individual pay actions; and recommending, planning, and implementing pay structure revisions.

Accounting:

- Managing the full cycle of accounting activities for the company
- Processing the accounts payable.
- Collating and entering vendor expenses
- Preparing bank statements
- Invoicing clients and customers
- Processing accounts receivable
- Maintain the accuracy of the general ledger
- Processing employee timesheets
- Managing the payroll systems.
- Working with accounting firm to prepare monthly Financial Statements

Attachment: Exhibit G - Paul Culver Construction - 22-BG-06 Bid Proposal (2023-R-55 : Fire Station Construction)

201 Osceola Avenue
Daytona Beach, FL 32114

paulculverconstruction.com

Ofc: (386) 763-4190
Fax: (386) 322-0007

PAUL CULVER CONSTRUCTION, INC.

QUALITY WORK BY SKILLED CRAFTSMEN. EST 2005.
License # CGC 059149



Name: **Reta B. Moore**

Title/Role: **Estimating Coordinator**

Duties Include:

- Keep up to date on all project notices (addendums, Q&A)
- Reach out to subcontractors and suppliers for the proposals.
- Ensures all subcontractors and suppliers are up to date with all project notices.
- Assists the Estimator with assembling the bid package / CM package

Significant Projects List:

- GC/CM Island Doctors, Florida, Mississippi, Alabama
- City of Daytona Beach, Municipal Stadium, Peninsula Club, (Historical Building) Campbell Pool Project $1,085,648.00
- Grand Haven Village $784,864.00
- Embry Riddle Aero University, Drone Lab, Landscaping Project, Door Replacement, Painting of Existing Building $632,000.00
- Halifax Health Ormond Pharmacy Renovation $666,392.00
- Alteration to Fire Station 36 (Volusia County) $813,182.00

Individual Project Experience

- City of Ormond Beach – Various Project $5+M
- Port Orange Elementary Additions & Renovations $2,276549.00
- Additions and Renovations to South Daytona Elementary School $1,341,915.00
- 2010 Fire Station #94 Ormond Beach
- Renovation of Fire Sprinkler & Truck Bay Ventilators Total Project Cost: $200,000
- 2006 Town of Ponce Inlet Fire Station Renovation Total Project Cost: $310,915
- 2005 Fire Station #91 Ormond Beach, Ground Up Total Project Cost: $1,293,592
- 2004 Fire Station #92 Ormond Beach, Ground Up Total Project Cost: $1,330,785

Company:
Paul Culver Construction, Inc.
2018 – Present

Education:
Mainland High School
Daytona State College
Microsoft Office

Timberline Software Key Leader

Notary

Years of Experience:
50 Plus Years of Construction Experience

Previous Employer(s):
Hall Construction Co., Inc
1977 – 2017

Location:
Ms. Moore resides in Ormond Beach and reports to the PCC Daytona Beach Office

Attachment: Exhibit G - Paul Culver Construction - 22-BG-06 Bid Proposal (2023-R-55 : Fire Station Construction)

PAUL CULVER CONSTRUCTION, INC.

QUALITY WORK BY SKILLED CRAFTSMEN. EST 2005.
License # CGC 059149



Company:
Paul Culver Construction, Inc.
2022 – Present

Education:
North Garland High School
Notary

Years of Experience: 10
Plus Years of Construction Experience

Previous Employer(s):
General Mechanical Corporation Contract Administrator 2018 – 2021

Prime Group, LLC
Onsite Construction Administrator 2017-2018

Masci General Contractor Inc.
Project Coordinator 2011-2017

Location:
Ms. Ball resides in Port Orange and reports to the PCC Daytona Beach Office

Name: **Kristi Ball**

Title/Role: **Project Administrator, Permitting & Contracts**

Duties Include:

- Permitting / Licensing
- Tracking project documents.
- Company EEO Officer
- Site Safety Plans
- FDOT Documentation
- Conducting administrative duties, such as attending progress meetings, drafting change orders for subcontractors
- Coordinate with Project Management

Projects List:

Masci General Contractor, Inc.

- FDOT – John Young Parkway Improvements $9M+
- City of New Smyrna Beach – Flood Mitigation Phase I & II $12M +
- Volusia County Resurfacing – 2017-2018
- Central Florida Expressway – SR 417 Improvements from Curry Ford Rd. to Lake Underhill Rd. $6M+

Prime Group, LLC

- The Daytona Hotel - $15M+
- Fairfield Inn @ One Daytona - $9M+

General Mechanical Corporation

- Atlantic HS – Aquaculture Lab $233,135.00
- Schnebly Center HVAC Replacement - $211,333.00
- Seabreeze HS – Upgrade Chiller Plant - $1,900,047.00
- Flagler Palm Coast HS – Auditorium Box Office and Restroom Renovation - $1,224,636.00
- Daytona Beach Bandshell Renovation - $998,891.00

Attachment: Exhibit G - Paul Culver Construction - 22-BG-06 Bid Proposal (2023-R-55 : Fire Station Construction)

PAUL CULVER CONSTRUCTION, INC.

QUALITY WORK BY SKILLED CRAFTSMEN. EST 2005.
License # CGC 059149



Name: **Kaitie Knox**

Title/Role: **Project Administrator - Submittals, Closeouts**

Duties Include:

- Work with the Project Manager to issue Purchase Orders and Subcontracts for the project.
- Collecting, tracking, submitting all submittals.
- Collect, review, and submit all project Closeout Documents.

Firm's Project Experience:

- Draft subcontracts and purchase orders.
- Submit and track submittals and closeout documents.
- Project documentation tracking.
- Coordinate with Project Manager daily.

Project List:

Cor3 Mechanical

- Harmony HS – Renovation $1,330,000
- Campbell MS - Media Center HAC $562,000

General Mechanical Corporation

- Deltona Lakes ES – Upgrade Chiller Plant $989,284
- Seabreeze HS – Upgrade Chiller Plant $1,900,047
- Embry Riddle Aeronautical University – S. Chiller Plant Piping Replacement $446,930
- FCSB - Auditorium Box Office & Restroom Renovation $1,224,636
- Daytona Bandshell Renovation $998,871.77
- Atlantic HS – Aquaculture Lab $233,135
- Schnebly Center HVAC Replacement $211,333

Manson Construction, Inc

- Mississippi State Port Channel Widening and Deepening $3,000,000
- Alabama Tombigbee Waterway Deepening $1,300,000
- Venice, LA Mississippi River Maintenance Dredging $2,000,000

Company:

- Paul Culver Construction 2023 – Present

Education / Certifications:

- University of North Florida BS - Building Construction
- Notary
- OSHA 30 Hour

Years of Experience:

- 15 Years of Construction Experience

Previous Employer(s):

- Cor3 Mechanical Project Coordinator 2022-2023
- General Mechanical Corp Project Coordinator 2013-2022
- Manson Construction Field Engineer 2011-2013

Location:

Ms. Knox resides in New Smyrna Beach and reports to the PCC Daytona Beach Office.

201 Osceola Avenue
Daytona Beach, FL 32114

paulculverconstruction.com

Ofc: (386) 763-4190
Fax: (386) 322-0007

Attachment: Exhibit G - Paul Culver Construction - 22-BG-06 Bid Proposal (2023-R-55 : Fire Station Construction)

SECTION 00 47 00

SWORN STATEMENT UNDER SECTION 287.133(3)(a), FLORIDA STATUTES, ON PUBLIC ENTITY CRIMES:

This sworn statement is submitted with Bid, Proposal **or** Contract No. 22-BG-06 for City of Holly Hill, Florida Fire Station Construction.

This sworn statement is submitted by Paul Culver Construction, Inc. whose business address is 201 Osceola Ave. Daytona Beach, FL 32114 and (if applicable) its Federal Employer Identification Number (FEIN) is 20-2380437. (If the entity has no FEIN, include the Social Security Number of the individual signing this sworn statement: XXXXXXXXXXXXXXX.)

My name is Paul K. Culver any my relationship to the entity named above is President.

I understand that a "public entity crime" as defined in Paragraph 287.133(g), Florida Statutes, means a violation of any state or federal law by a person with respect to and directly related to the transaction of business with any public entity or with an agency or political subdivision of any other state or with the United States, including, but not limited to, any bid or contract for goods or services to be provided to any public entity or an agency or political subdivision of any other state or of the United States and involving antitrust, fraud, theft, bribery, collusion, racketeering, conspiracy, or material misrepresentation.

I understand that "convicted" or "conviction" as defined in Paragraph 287.133(i)(b), Florida Statutes, means a finding of guilt or a conviction of a public entity crime, with or without an adjudication of guilt, in any federal or state trial court of record relating to charges brought by indictment or information after July 1, 1989, as a result of a jury verdict, nonjury trial, or entry of a plea of guilty or nolo contenders.

I understand that an "affiliate" as defined in Paragraph **287.133(l)(a),** Florida Statutes, means:

1. A predecessor or successor of a person convicted of a public entity crime: or

2. An entity under the control of any natural person who is active in the management of the entity and who has been convicted of a public entity crime. The term "affiliate" includes those officers, directors, executives, partners, shareholders, employees, members, and agents who are active in the management of an affiliate. The ownership by one person of shares constituting a controlling interest in another person, or a pooling of equipment or income among persons when not for fair market value under an arm's length agreement,

Attachment: Exhibit G - Paul Culver Construction - 22-BG-06 Bid Proposal (2023-R-55 : Fire Station Construction)

shall be a prima facie that one person controls another person. A person who knowingly enters into a joint venture with a
person who has been convicted of a public entity crime in Florida during the preceding 36 months shall be considered an affiliate.

I understand that a "person" as defined in Paragraph 287.133(i)(e), Florida Statutes, means any natural person or entity organized under the laws of any state or of the United States with the legal power to enter into a binding contract and which bids or applies to bid on contracts for the provision of goods or services let by a public entity, or which otherwise transacts or applies to transact business with a public entity. The term "person" includes those officers, directors, executives, partners, shareholders, employees, members, and agents who are active in management of an entity.

Based on information and belief, the statement which I have marked below is true in relation to the entity submitting this sworn statement. (Please indicate which statement applies).

_X_ Neither the entity submitting this sworn statement, nor any officers, directors, executives, partners, shareholders, employees, members or agents who are active in management of the entity, nor any affiliate of the entity have been charged with and convicted of a public entity crime subsequent to July 1, 1989.

_____ The entity submitting this sworn statement, or one or more of the officers, directors, executives, partners, shareholders, employees, members, or agents who are active in management of the entity, or an affiliate of the entity has been charged with and convicted of a public entity crime subsequent to July 1, 1989, AND (Please indicate which additional statement applies.)

_____ There has been a proceeding concerning the conviction before a hearing officer of the State of Florida, Division of Administrative Hearings. The final order entered by the hearing officer did not place the person or affiliate on the convicted vendor list. (Please attach a copy of the final order.)

_____ The person or affiliate was placed on the convicted vendor list. There has been a subsequent proceeding before a hearing officer of the State of Florida, Division of Administrative Hearings. The final order entered by the hearing officer determined that it was in the public interest to remove the person or affiliate from the convicted vendor list. (Please attach a copy of the final order).

Attachment: Exhibit G - Paul Culver Construction - 22-BG-06 Bid Proposal (2023-R-55 : Fire Station Construction)

(Signature) _____ Date: 0-29-2023

State of Florida County of Volusia

PERSONALLY APPEARED BEFORE ME, the undersigned authority, Paul K. Culver who, after first being sworn by me, affixed his/her signature in the space provided above on this 29th day of August, 20 23.

Notary Public

My Commission Expires: 09-12-2026

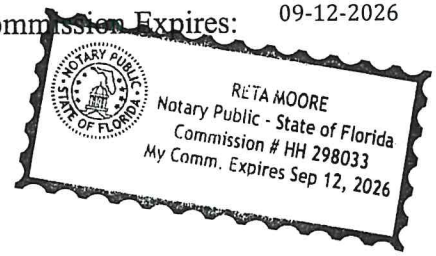

Attachment: Exhibit G - Paul Culver Construction - 22-BG-06 Bid Proposal (2023-R-55 : Fire Station Construction)

SECTION 00 48 00
ANTI-COLLUSION STATEMENT

By signing this form, the bidder agrees that this is made without any other understanding, agreement, or connection with any person, corporation, or firm submitting a proposal for the same purpose and that the proposal is in all respects fair and without collusion or fraud.

SIGN in ink in the space provided below. Unsigned bids will be considered incomplete, and will be disqualified, and rejected.

IT IS AGREED BY THE UNDERSIGNED BIDDER THAT THE SIGNING AND DELIVERY OF THE BID REPRESENTS THE BIDDER'S ACCEPTANCE OF THE TERMS AND CONDITIONS OF THE FORGOING SPECIFICATIONS, CONTRACT AND PROVISIONS, AND IF AWARDED, THIS CONTRACT WILL REPRESENT THE AGREEMENT BETWEEN EACH OF THE GOVERNMENTAL PARTIES.

NAME OF FIRM: Paul Culver Construction, Inc.

SIGNED BY: _____
(MUST BE SIGNED BY A COMPANY OFFICER OR AUTHORIZED AGENT)

TITLE: President

ADDRESS: 201 Osceola Ave

CITY AND STATE: Daytona Beach, FL 32114

TELEPHONE: 386-763-4190

COMPLETION TIME: _____

NO proposals will be withdrawn for a period of ninety (90) days subsequent to the opening of the proposals, without the consent of the City of Holly Hill.

NO BID (REASON) _____

_____

_____

END OF SECTION

Attachment: Exhibit G - Paul Culver Construction - 22-BG-06 Bid Proposal (2023-R-55 : Fire Station Construction)

SECTION 00 48 50
DRUG FREE/TIE PREFERENCE STATEMENT

In the event of a tie bid a preference is given to vendors submitting a certification with their bid/proposal certifying they have a drug-free workplace in accordance with Section 287.087, Florida Statutes. This requirement affects all public entities of the State and becomes effective January 1, 1991. The special conditions are as follow:

IDENTICAL TIE BIDS - Preference shall be given to businesses with drug-free workplace programs. Whenever two or more bids which are equal with respect to price, quality, and service are received by the State or by any political subdivision for the procurement of commodities or contractual services, a bid received from a business that certifies that it has implemented a drugfree workplace program shall be given preference in the award process. Established procedures for processing tie bids will be followed if none of the tied vendors have a drug-free workplace program. In order to have a drug-free workplace program, a business shall:

1. Publish a statement notifying employees that the unlawful manufacture, distribution, dispensing, possession, or use of a controlled substance is prohibited in the workplace and specifying the actions that will be taken against employees for violations of such prohibition.

2. Inform employees about the dangers of drug abuse in the workplace, the business's policy of maintaining a drug-free workplace, any available drug counseling, rehabilitation and employee assistance programs, and the penalties that may be imposed upon employees for drug abuse violations.

3. Give each employee engaged in providing the commodities or contractual services that are under bid a copy of the statement specified in subsection (1).

4. In the statement specified in subsection (1), notify the employees that, as a condition of working on the commodities or contractual services that are under bid, the employee will abide by the terms of the statement and will notify the employer of any conviction or, or plea of guilty or nolo contendere to, any violation of chapter 893 or of any controlled substance law of the United States or any state, for a violation occurring in the workplace no later than five (5) days after such conviction.

5. Impose a sanction on, or require the satisfaction participation in a drug abuse assistance or rehabilitation program if such is available in the employee's community, by any employee who is so convicted.

6. Make a good faith effort to continue to maintain a drug-free workplace through implementation of this section.

As the person authorized to sign the statement, I certify that this firm complies fully with the above requirements.

VENDOR'S SIGNATURE

END OF SECTION

Attachment: Exhibit G - Paul Culver Construction - 22-BG-06 Bid Proposal (2023-R-55 : Fire Station Construction)

SECTION 00 48 60

COMPLIANCE WITH THE PUBLIC RECORDS LAW

Project Number: ITB # 22-BG-06

Upon award recommendation or ten (10) days after opening, submittals become "public records" and shall be subject to public disclosure consistent with Chapter 119, Florida Statutes. Proposers must invoke the exemptions to disclosure provided by law in the response to the solicitation, and must identify the data or other materials to be protected, and must state the reasons why such exclusion from public disclosure is necessary. The submission of a proposal authorizes release of your firm's credit data to the CITY.

If the company submits information exempt from public disclosure, the company must identify with specificity which pages/paragraphs of their bid/proposal package are exempt from the Public Records Act, identifying the specific exemption section that applies to each. The protected information must be submitted to the CITY in a separate envelope marked accordingly.

IF THE CONTRACTOR HAS QUESTIONS REGARDING THE APPLICATION OF CHAPTER 119, FLORIDA STATUTES, TO THE CONTRACTOR'S DUTY TO PROVIDE PUBLIC RECORDS RELATING TO THIS CONTRACT, CONTACT THE CUSTODIAN OF PUBLIC RECORDS AT

Valerie Manning, City Clerk
386-248-9441
vmanning@hollyhillfl.org
1065 Ridgewood Ave
Holly Hill, FL 32117

A provision that requires the contractor to comply with public records laws, specifically to:

1. Keep and maintain public records required by the public agency to perform the service.
2. Upon request from the public agency's custodian of public records, provide the public agency with a copy of the requested records or allow the records to be inspected or copied within a reasonable time at a cost that does not exceed the cost provided in this chapter or as otherwise provided by law.
3. Ensure that public records that are exempt or confidential and exempt from public records disclosure requirements are not disclosed except as authorized by law for the duration of the contract term and following completion of the contract if the contractor does not transfer the records to the public agency.
4. Upon completion of the contract, transfer, at no cost, to the public agency all public records in possession of the contractor or keep and maintain public records required by the public agency to perform the service. If the contractor transfers all public records to the public agency upon completion of the contract, the contractor shall destroy any duplicate public records that are exempt or confidential and exempt from public records disclosure requirements. If the contractor keeps and maintains public records upon completion of the contract, the contractor shall meet all applicable requirements for retaining public records. All records stored electronically must be provided to the public agency, upon request from the public agency's custodian of public records, in a format that is compatible with the information technology systems of the public agency.

By submitting a response to this solicitation, the company agrees to defend the CITY in the event we are forced to litigate the public records status of the company's documents.

Company Name: **Paul Culver Construction, Inc.**

Authorized representative (printed): **PAUL K. CULVER, PRESIDENT**

Authorized representative (signature): _____

Date: **08-29-2023**

END OF SECTION

Attachment: Exhibit G - Paul Culver Construction - 22-BG-06 Bid Proposal (2023-R-55 : Fire Station Construction)

SECTION 00 48 80

E-VERIFY COMPLIANCE

Affidavit of E-Verify Requirements
Compliance

ITB 22-BG-06

The Consultant/Contractor agrees to comply with Section 448.093, Florida Statutes, and to incorporate in all subcontracts the obligation to comply with Section 448.093, Florida Statutes.

1. The Consultant/Contractor shall utilize the U.S. Department of Homeland Security's E-Verify system to verify the employment eligibility of all new employees hired by the Consultant/Contractor during the term of the Agreement and shall expressly require any subcontractors performing work or providing services pursuant to the Agreement to likewise utilize the U.S. Department of Homeland Security's E-Verify system to verify the employment eligibility of all new employees hired by the subconsultant/subcontractor during the Agreement term.

2. That the Consultant/Contractor understands and agrees that its failure to comply with the verification requirements as set forth herein or its failure to ensure that all employees and subconsultant/subcontractors performing work under this Agreement are legally authorized to work in the United States and the State of Florida constitute a breach of this Agreement for which the City may immediately terminate the Agreement without notice and without penalty. The Consultant/Contractor further understands and agrees that in the event of such termination, the Consultant/Contractor shall be liable to the City for any costs incurred by the City as a result of the Consultant's/Contractor's breach

Consultant/Contractor shall execute and return the Affidavit of E-Verify Requirements Compliance to City. IN WITNESS WHEREOF, the parties have made and executed this Agreement for the purposes stated above.

Paul Culver Construction, Inc.

Consultant/Contractor Name and Address

Signature

Paul K. Culver, President

Name and Title

Attachment: Exhibit G - Paul Culver Construction - 22-BG-06 Bid Proposal (2023-R-55 : Fire Station Construction)

CONTRACTOR E-VERIFY AFFIDAVIT

I hereby certify that Paul Culver Construction, Inc. [insert contractor company name] does not employ, contract with, or subcontract with an unauthorized alien, and is otherwise in full compliance with Section 448.095, Florida Statutes.

All employees hired on or after January 1, 2021 have had their work authorization status verified through the E-Verify system.

A true and correct copy of Paul Culver Construction, Inc. [insert contractor company name] proof of registration in the E-Verify system is attached to this Affidavit.

Print Name: Paul K. Culver , President

Date: 05-22-2023

STATE OF FLORIDA

COUNTY OF Volusia

The foregoing instrument was acknowledged before me by means of ■ physical presence or ☐ online notarization, this 22nd (date) by May (name of officer or agent, title of officer or agent) of Paul Culver Construction, Inc. (name of contractor company acknowledging), a _____ (state or place of incorporation) corporation, on behalf of the corporation. He/she is personally known to me or has produced know to me (type of identification) as identification.

[Notary Seal]

Notary Public

Reta Moore

Name typed, printed or stamped

My Commission Expires: 09-12-2026

RETA MOORE
Notary Public - State of Florida
Commission # HH 298033
My Comm. Expires Sep 12, 2026

Attachment: Exhibit G - Paul Culver Construction - 22-BG-06 Bid Proposal (2023-R-55 : Fire Station Construction)

E-Verify

Welcome
Arlene Pacholsky

≡ MENU

Company Information

Company Name
Paul Culver Construction Inc

Company ID Number
1483397

Doing Business As (DBA) Name
--

DUNS Number
--

Physical Location

Address 1
1301 Beville Rd

Address 2
Suite 6

City
Daytona Beach

State
FL

Zip Code
32119

County
VOLUSIA

Mailing Address

Address 1
--

Address 2
--

City
--

State
--

Zip Code

Attachment: Exhibit G - Paul Culver Construction - 22-BG-06 Bid Proposal (2023-R-55 : Fire Station Construction)

--

Additional Information

Employer Identification Number
202380437

Total Number of Employees
10 to 19

Parent Organization
--

Administrator
--

Organization Designation

Employer Category
None of these categories apply

View / Edit

NAICS Code
236 - CONSTRUCTION OF BUILDINGS

View / Edit

Total Hiring Sites
1

View / Edit

Total Points of Contact
3

View / Edit

View Original MOU Template

View MOU

Attachment: Exhibit G - Paul Culver Construction - 22-BG-06 Bid Proposal (2023-R-55 : Fire Station Construction)

E-Verify
Employment Eligibility Verification

Knowledge Test Results

Congratulations!

Arlene Pacholsky (APAC3929), your score is 100%

Arlene Pacholsky, you successfully completed this tutorial and passed the E-Verify Knowledge Test on December 27, 2019.

Use your browser's print capability to obtain a copy of this page for your records.

To use E-Verify, select 'Exit Tutorial.'

E-Verify

REMINDER: You must visit 'View Essential Resources' to read the E-Verify User Manual, and you must print and clearly display the 'Notice of E-Verify Participation' and 'Right to Work' posters in all languages supplied by DHS.

Attachment: Exhibit G - Paul Culver Construction - 22-BG-06 Bid Proposal (2023-R-55 : Fire Station Construction)

STATE OF FLORIDA
DEPARTMENT OF BUSINESS AND PROFESSIONAL REGULATION

2601 BLAIR STONE ROAD
TALLAHASSEE FL 32399-0783

Congratulations! With this license you become one of the nearly one million Floridians licensed by the Department of Business and Professional Regulation. Our professionals and businesses range from architects to yacht brokers, from boxers to barbeque restaurants, and they keep Florida's economy strong.

Every day we work to improve the way we do business in order to serve you better. For information about our services, please log onto www.myfloridalicense.com. There you can find more information about our divisions and the regulations that impact you, subscribe to department newsletters and learn more about the Department's initiatives.

Our mission at the Department is: License Efficiently, Regulate Fairly. We constantly strive to serve you better so that you can serve your customers. Thank you for doing business in Florida, and congratulations on your new license!

STATE OF FLORIDA DEPARTMENT OF BUSINESS AND PROFESSIONAL REGULATION

CGC059149 ISSUED: 08/30/2022
CERTIFIED GENERAL CONTRACTOR
CULVER, PAUL KEITH
PAUL CULVER CONSTRUCTION INC

Signature
LICENSED UNDER CHAPTER 489, FLORIDA STATUTES
EXPIRATION DATE: AUGUST 31, 2024

Ron DeSantis, Governor

Melanie S. Griffin, Secretary

STATE OF FLORIDA
DEPARTMENT OF BUSINESS AND PROFESSIONAL REGULATION
CONSTRUCTION INDUSTRY LICENSING BOARD

LICENSE NUMBER: CGC059149

EXPIRATION DATE: AUGUST 31, 2024

THE GENERAL CONTRACTOR HEREIN IS CERTIFIED UNDER THE PROVISIONS OF CHAPTER 489, FLORIDA STATUTES

CULVER, PAUL KEITH
PAUL CULVER CONSTRUCTION INC
201 OSCEOLA AVENUE
DAYTONA BEACH FL 32114

ISSUED: 08/30/2022

Always verify licenses online at MyFloridaLicense.com
Do not alter this document in any form.
This is your license. It is unlawful for anyone other than the licensee to use this document.

Attachment: Exhibit G - Paul Culver Construction - 22-BG-06 Bid Proposal (2023-R-55 : Fire Station Construction)

2022 / 2023

Volusia County Business Tax Receipt

Issued pursuant to F.S. 205 and Volusia County Code of Ordinances Chapter 114-1 by:
Volusia County Treasury and Billing - 125 W New York Ave, Room 120, Deland, FL 32720 - (386) 943-7085

Volusia County
FLORIDA

Account #: 200503160024
Business Location: 201 OSCEOLA AVE

Expires: September 30, 2023

Business Name: PAUL CULVER CONSTRUCTION INC
Owner Name: PAUL CULVER CONSTRUCTION INC
Mailing Address 201 OSCEOLA AVE
DAYTONA BEACH, FL 32114

BUSINESS TYPE	REQ DOC #	CODE	COUNT	TAX
General Contractor Class A	CGC059149	301C	17	$36.00
Hazardous Waste Fee		HW	1	$44.00

- This receipt indicates payment of a tax, which is levied for the privilege of doing the type(s) of business listed above within Volusia County. This receipt is non-regulatory in nature and is not meant to be a certification of the holder's ability to perform the service for which he is registered. This receipt also does not indicate that the business is legal or that it is in compliance with State or local laws and regulations.
- The business must meet all County and/or Municipality planning and zoning requirements or this Business Tax Receipt may be revoked and all taxes paid would be forfeited.
- The information contained on this Business Tax Receipt must be kept up to date. Contact the Volusia County Treasury and Billing for instructions on making changes to your account.

THIS PORTION OF THE BUSINESS TAX RECEIPT MUST BE POSTED CONSPICUOUSLY IN YOUR PLACE OF BUSINESS

Attachment: Exhibit G - Paul Culver Construction - 22-BG-06 Bid Proposal (2023-R-55 : Fire Station Construction)

THE CITY OF DAYTONA BEACH

DEVELOPMENT SERVICES DEPARTMENT
PERMITS & LICENSING DIVISION
301 S. RIDGEWOOD, SUITE # 127
DAYTONA BEACH, FL 32114
Phone: 386-671-8140

LOCAL BUSINESS TAX RECEIPT # BT-80888

Business Name:	PAUL CULVER CONSTRUCTION INC	BT-80888	Bus Lic No.
Business Location:	201 Osceola Ave	9/30/2023	Valid To
Business Type:	GENERAL CONTRACTOR	ACTIVE	Status
License Notes:	(8/10/2021 8:41 AM RSP) FL LIC CGC059149	8/23/2022	Date Paid

Fee Code	*Description*
CON	CONTRACTOR
0355	CONTRACTOR FEES
SIGN	SIGNS

Mail To: PAUL CULVER CONSTRUCTION INC
1301 Beville RD #6
DAYTONA BEACH FL 32119

2023

LOCAL BUSINESS TAX RECEIPT

DISPLAY AT PLACE OF BUSINESS FOR PUBLIC INSPECTION
THE CITY DOES NOT CERTIFY OR IMPLY COMPETENCE OF BUSINESS.

Attachment: Exhibit G - Paul Culver Construction - 22-BG-06 Bid Proposal (2023-R-55 : Fire Station Construction)

Detail by Entity Name

Florida Profit Corporation
PAUL CULVER CONSTRUCTION, INC.

Filing Information

Document Number	P05000025877
FEI/EIN Number	20-2380437
Date Filed	02/18/2005
State	FL
Status	ACTIVE
Last Event	REINSTATEMENT
Event Date Filed	10/02/2014

Principal Address

201 Osceola Ave
Daytona Beach, FL 32114

Changed: 10/05/2022

Mailing Address

201 Osceola Ave
Daytona Beach, FL 32114

Changed: 10/05/2022

Registered Agent Name & Address

CULVER, PAUL K
201 Osceola Ave
Daytona Beach, FL 32114

Address Changed: 01/26/2023

Officer/Director Detail

Name & Address

Title PRESIDENT

CULVER, PAUL K
201 OSCEOLA AVE
DAYTONA BEACH, FL 32119

Annual Reports

Attachment: Exhibit G - Paul Culver Construction - 22-BG-06 Bid Proposal (2023-R-55 : Fire Station Construction)

Report Year	Filed Date
2021	01/18/2021
2022	01/24/2022
2023	01/26/2023

Document Images

01/26/2023 -- ANNUAL REPORT	View image in PDF format
01/24/2022 -- ANNUAL REPORT	View image in PDF format
01/18/2021 -- ANNUAL REPORT	View image in PDF format
01/16/2020 -- ANNUAL REPORT	View image in PDF format
02/14/2019 -- ANNUAL REPORT	View image in PDF format
01/23/2018 -- ANNUAL REPORT	View image in PDF format
03/20/2017 -- ANNUAL REPORT	View image in PDF format
04/29/2016 -- ANNUAL REPORT	View image in PDF format
04/13/2015 -- ANNUAL REPORT	View image in PDF format
10/02/2014 -- REINSTATEMENT	View image in PDF format
06/11/2013 -- ANNUAL REPORT	View image in PDF format
01/04/2012 -- REINSTATEMENT	View image in PDF format
03/30/2010 -- ANNUAL REPORT	View image in PDF format
03/23/2009 -- ANNUAL REPORT	View image in PDF format
07/08/2008 -- ANNUAL REPORT	View image in PDF format
04/09/2007 -- ANNUAL REPORT	View image in PDF format
03/22/2006 -- ANNUAL REPORT	View image in PDF format
02/18/2005 -- Domestic Profit	View image in PDF format

Alaska Department of State, Division of Corporations

Attachment: Exhibit G - Paul Culver Construction - 22-BG-06 Bid Proposal (2023-R-55 : Fire Station Construction)

Form **W-9**
(Rev. October 2007)
Department of the Treasury
Internal Revenue Service

Request for Taxpayer Identification Number and Certification

Give form to the requester. Do not send to the IRS.

Print or type
See Specific Instructions on page 2.

Name (as shown on your income tax return)
Paul K. Culver

Business name, if different from above
Paul Culver Construction, Inc.

Check appropriate box: ☐ Individual/Sole proprietor ☐ Corporation ☐ Partnership
☑ Limited liability company. Enter the tax classification (D=disregarded entity, C=corporation, P=partnership) ▶ .....
☐ Other (see instructions) ▶

☐ Exempt payee

Address (number, street, and apt. or suite no.)
201 Osceola Ave.

Requester's name and address (optional)

City, state, and ZIP code
Daytona Beach, FL 32114

List account number(s) here (optional)

Part I Taxpayer Identification Number (TIN)

Enter your TIN in the appropriate box. The TIN provided must match the name given on Line 1 to avoid backup withholding. For individuals, this is your social security number (SSN). However, for a resident alien, sole proprietor, or disregarded entity, see the Part I instructions on page 3. For other entities, it is your employer identification number (EIN). If you do not have a number, see *How to get a TIN* on page 3.

Note. If the account is in more than one name, see the chart on page 4 for guidelines on whose number to enter.

Social security number
: :

or

Employer identification number
20 : 2380437

Part II Certification

Under penalties of perjury, I certify that:

1. The number shown on this form is my correct taxpayer identification number (or I am waiting for a number to be issued to me), and
2. I am not subject to backup withholding because: (a) I am exempt from backup withholding, or (b) I have not been notified by the Internal Revenue Service (IRS) that I am subject to backup withholding as a result of a failure to report all interest or dividends, or (c) the IRS has notified me that I am no longer subject to backup withholding, and
3. I am a U.S. citizen or other U.S. person (defined below).

Certification instructions. You must cross out item 2 above if you have been notified by the IRS that you are currently subject to backup withholding because you have failed to report all interest and dividends on your tax return. For real estate transactions, item 2 does not apply. For mortgage interest paid, acquisition or abandonment of secured property, cancellation of debt, contributions to an individual retirement arrangement (IRA), and generally, payments other than interest and dividends, you are not required to sign the Certification, but you must provide your correct TIN. See the instructions on page 4.

Sign Here Signature of U.S. person ▶ [signature] Date ▶ 07-10-2023

General Instructions

Section references are to the Internal Revenue Code unless otherwise noted.

Purpose of Form

A person who is required to file an information return with the IRS must obtain your correct taxpayer identification number (TIN) to report, for example, income paid to you, real estate transactions, mortgage interest you paid, acquisition or abandonment of secured property, cancellation of debt, or contributions you made to an IRA.

Use Form W-9 only if you are a U.S. person (including a resident alien), to provide your correct TIN to the person requesting it (the requester) and, when applicable, to:

1. Certify that the TIN you are giving is correct (or you are waiting for a number to be issued),
2. Certify that you are not subject to backup withholding, or
3. Claim exemption from backup withholding if you are a U.S. exempt payee. If applicable, you are also certifying that as a U.S. person, your allocable share of any partnership income from a U.S. trade or business is not subject to the withholding tax on foreign partners' share of effectively connected income.

Note. If a requester gives you a form other than Form W-9 to request your TIN, you must use the requester's form if it is substantially similar to this Form W-9.

Definition of a U.S. person. For federal tax purposes, you are considered a U.S. person if you are:

- An individual who is a U.S. citizen or U.S. resident alien,
- A partnership, corporation, company, or association created or organized in the United States or under the laws of the United States,
- An estate (other than a foreign estate), or
- A domestic trust (as defined in Regulations section 301.7701-7).

Special rules for partnerships. Partnerships that conduct a trade or business in the United States are generally required to pay a withholding tax on any foreign partners' share of income from such business. Further, in certain cases where a Form W-9 has not been received, a partnership is required to presume that a partner is a foreign person, and pay the withholding tax. Therefore, if you are a U.S. person that is a partner in a partnership conducting a trade or business in the United States, provide Form W-9 to the partnership to establish your U.S. status and avoid withholding on your share of partnership income.

The person who gives Form W-9 to the partnership for purposes of establishing its U.S. status and avoiding withholding on its allocable share of net income from the partnership conducting a trade or business in the United States is in the following cases:

- The U.S. owner of a disregarded entity and not the entity,

Attachment: Exhibit G - Paul Culver Construction - 22-BG-06 Bid Proposal (2023-R-55 : Fire Station Construction)

CITY OF HOLLY HILL, FLORIDA
INSURANCE REQUIREMENTS CHECKLIST
CITY OF HOLLY HILL, VOLUSIA COUNTY, FLORIDA

Items marked "X" must be provided

X	General Liability		Minimum Limits Required	
X	Commercial General Liability		$ 2,000,000	General Aggregate
X	Occurrence Form		$ 1,000,000	Product/Completed Operations Agg.
___	_____		$ 1,000,000	Personal & Advertising Injury
___	_____		$ 1,000,000	Each Occurrence
___	_____		$ 100,000	Fire Damage Pump Stations
X	Automobile Liability			
	Owned, Hired & Non-Owned		$ 1,000,000	Combined Single Limit per Occurrence
X	Worker's Compensation and		Statutory	
	Employer's Liability		$ 100,000	Each Accident
			$ 500,000	Disease - Policy Limit
			$ 100,000	Disease - Each Employee
___	Professional Liability - Errors & Omissions (*To be completed by Bidder)			
	* Deductible: $_____		$_____	Aggregate *
	Claims Made (Y/N):_____		$_____	Each Claim
	*Occurrence (Y/N):			
	*Defense included in Limits (Y/N):			
X	Builder's Risk/Installation Floater (*To be completed by Bidder)			
	* Flood included $_____ Limit		$_____	100% of Completed or Installed Value, All-Risk Form
	* Transportation included $_____ Limit			
	* Storage included $_____ Limit			
	City must be a named insured. Copy of policy will be required.			
___	Other			

We have attached our Standard Certificate of Insurance
Upon Signing of Contract the City of Holly Hill Insurance Requirments will be submitted

Paul K. Culver, President @Paul Culver Construction, Inc.

X The Certificate of Insurance must show "The City of HOLLY HILL, elected officials and employees" and the adjacent property owners as an additional insured.

X Certificates must give to the City of HOLLY HILL 30 days' prior written notice of cancellation, non-renewal, or adverse change.

X Certificates must identify bid number and bid title.

X A Wavier of Subrogation shall be provided to the City

Statement of Bidder:
We understand the requirements requested and agree to comply fully.

Bidder - Authorized Signature A complete copy of this form with original signature must accompany bid.

Attachment: Exhibit G - Paul Culver Construction - 22-BG-06 Bid Proposal (2023-R-55 : Fire Station Construction)

ACORD®

CERTIFICATE OF LIABILITY INSURANCE

DATE (MM/DD/YYYY): 02/08/2023

THIS CERTIFICATE IS ISSUED AS A MATTER OF INFORMATION ONLY AND CONFERS NO RIGHTS UPON THE CERTIFICATE HOLDER. THIS CERTIFICATE DOES NOT AFFIRMATIVELY OR NEGATIVELY AMEND, EXTEND OR ALTER THE COVERAGE AFFORDED BY THE POLICIES BELOW. THIS CERTIFICATE OF INSURANCE DOES NOT CONSTITUTE A CONTRACT BETWEEN THE ISSUING INSURER(S), AUTHORIZED REPRESENTATIVE OR PRODUCER, AND THE CERTIFICATE HOLDER.

IMPORTANT: If the certificate holder is an ADDITIONAL INSURED, the policy(ies) must have ADDITIONAL INSURED provisions or be endorsed. If SUBROGATION IS WAIVED, subject to the terms and conditions of the policy, certain policies may require an endorsement. A statement on this certificate does not confer rights to the certificate holder in lieu of such endorsement(s).

PRODUCER	CONTACT NAME: Laura Bell
Brown and Brown of Florida, Inc. PO Box 2412 Daytona Beach FL 32115	PHONE (A/C, No, Ext): (386) 333-6137 FAX (A/C, No): (386) 323-9117 E-MAIL ADDRESS: laura.bell@bbrown.com
INSURED Paul Culver Construction, Inc. 201 Osceola Ave Daytona Beach FL 32114	INSURER(S) AFFORDING COVERAGE — NAIC # INSURER A: Southern Owners Insurance Company — 10190 INSURER B: Progressive Express Insurance Company — 10193 INSURER C: American Builders Insurance Co. — 11240 INSURER D: INSURER E: INSURER F:

COVERAGES **CERTIFICATE NUMBER:** 23-24 **REVISION NUMBER:**

THIS IS TO CERTIFY THAT THE POLICIES OF INSURANCE LISTED BELOW HAVE BEEN ISSUED TO THE INSURED NAMED ABOVE FOR THE POLICY PERIOD INDICATED. NOTWITHSTANDING ANY REQUIREMENT, TERM OR CONDITION OF ANY CONTRACT OR OTHER DOCUMENT WITH RESPECT TO WHICH THIS CERTIFICATE MAY BE ISSUED OR MAY PERTAIN, THE INSURANCE AFFORDED BY THE POLICIES DESCRIBED HEREIN IS SUBJECT TO ALL THE TERMS, EXCLUSIONS AND CONDITIONS OF SUCH POLICIES. LIMITS SHOWN MAY HAVE BEEN REDUCED BY PAID CLAIMS.

INSR LTR	TYPE OF INSURANCE	ADDL INSD	SUBR WVD	POLICY NUMBER	POLICY EFF (MM/DD/YYYY)	POLICY EXP (MM/DD/YYYY)	LIMITS	
A	[X] COMMERCIAL GENERAL LIABILITY [ ] CLAIMS-MADE [X] OCCUR [X] XCU Included GEN'L AGGREGATE LIMIT APPLIES PER: [ ] POLICY [X] PRO-JECT [X] LOC [ ] OTHER:			152382-72295734	02/10/2023	02/10/2024	EACH OCCURRENCE DAMAGE TO RENTED PREMISES (Ea occurrence) MED EXP (Any one person) PERSONAL & ADV INJURY GENERAL AGGREGATE PRODUCTS - COMP/OP AGG	$ 2,000,000 $ 50,000 $ 5,000 $ 2,000,000 $ 4,000,000 $ 4,000,000
B	AUTOMOBILE LIABILITY [X] ANY AUTO [ ] OWNED AUTOS ONLY [ ] SCHEDULED AUTOS [ ] HIRED AUTOS ONLY [ ] NON-OWNED AUTOS ONLY			965981383	02/10/2023	02/10/2024	COMBINED SINGLE LIMIT (Ea accident) BODILY INJURY (Per person) BODILY INJURY (Per accident) PROPERTY DAMAGE (Per accident) PIP	$ 1,000,000 $ $ $ $ 10,000
A	[X] UMBRELLA LIAB [X] OCCUR [ ] EXCESS LIAB [ ] CLAIMS-MADE [ ] DED [X] RETENTION $ 10,000			50-322-862-02	02/10/2023	02/10/2024	EACH OCCURRENCE AGGREGATE Prods & Completed Ops	$ 1,000,000 $ 1,000,000 $ 1,000,000
C	WORKERS COMPENSATION AND EMPLOYERS' LIABILITY ANY PROPRIETOR/PARTNER/EXECUTIVE OFFICER/MEMBER EXCLUDED? (Mandatory in NH) Y/N [N] If yes, describe under DESCRIPTION OF OPERATIONS below	N/A		WCV 0310621 02	02/10/2023	02/10/2024	[X] PER STATUTE [ ] OTH-ER E.L. EACH ACCIDENT E.L. DISEASE - EA EMPLOYEE E.L. DISEASE - POLICY LIMIT	 $ 1,000,000 $ 1,000,000 $ 1,000,000

DESCRIPTION OF OPERATIONS / LOCATIONS / VEHICLES (ACORD 101, Additional Remarks Schedule, may be attached if more space is required)

SEE NOTES FOR POLICY COVERAGE FORMS

CERTIFICATE HOLDER

CANCELLATION

SHOULD ANY OF THE ABOVE DESCRIBED POLICIES BE CANCELLED BEFORE THE EXPIRATION DATE THEREOF, NOTICE WILL BE DELIVERED IN ACCORDANCE WITH THE POLICY PROVISIONS.

AUTHORIZED REPRESENTATIVE

© 1988-2015 ACORD CORPORATION. All rights reserved.

The ACORD name and logo are registered marks of ACORD

Attachment: Exhibit G - Paul Culver Construction - 22-BG-06 Bid Proposal (2023-R-55 : Fire Station Construction)

AGENCY CUSTOMER ID: _____

LOC #: _____

ADDITIONAL REMARKS SCHEDULE

Page ____ of ____

AGENCY	NAMED INSURED
Brown and Brown of Florida, Inc.	Paul Culver Construction, Inc.
POLICY NUMBER	
CARRIER / NAIC CODE	EFFECTIVE DATE:

ADDITIONAL REMARKS

THIS ADDITIONAL REMARKS FORM IS A SCHEDULE TO ACORD FORM,

FORM NUMBER: 25 FORM TITLE: Certificate of Liability Insurance: Notes

CURRENT BLANKET POLICY FORMS

GENERAL LIABILITY
1) 55373 0517 - BLANKET ADDITIONAL INSURED & PRIMARY AND NONCONTRIBUTORY OTHER INSURANCE CONDITION (ADDITIONAL INSURED-ONGOING OPERATIONS, ADDITIONAL INSURED-COMPLETED OPERATIONS, PRIMARY & NON-CONTRIBUTORY)

AUTO LIABILITY
1) 1198 0104 - (ADDITIONAL INSURED)
2) 8610 0509 - (WAIVER OF SUBROGATION)

WORKERS COMPENSATION
1) WC000313 0484 - WAIVER OF OUR RIGHT TO RECOVER FROM OTHERS ENDORSEMENT

UMBRELLA LIABILITY
1) 26800 0705 - COMMERCIAL UMBRELLA POLICY (ADDITIONAL INSURED)
2) 66159 12-17 - BLANKET WWAIVER TRANSFER OF RIGHTS OF RECOVERY AGAINST OTHERS TO US
3) 66160 12-17 - ADDITIONAL INSURED PRIMARY NONCONTRIBUTORY - BLANKET COVERAGE
THE UMBRELLA LIABILTY APPLIES IN EXCESS OF THE GENERAL LIABILITY, AUTO LIABILITY, AND EMPLOYERS LIABILITY.

© 2008 ACORD CORPORATION. All rights reserved.
The ACORD name and logo are registered marks of ACORD

Attachment: Exhibit G - Paul Culver Construction - 22-BG-06 Bid Proposal (2023-R-55 : Fire Station Construction)

SECTION 00 30 00
PROPOSAL

FOR

CITY OF HOLLY HILL

FIRE STATION CONSTRUCTION

BID NO. 22-BG-06

(To be completed in Duplicate)

Bidder's Name: Saboungi Construction, Inc.

Submitted: August 29, 2023

City of Holly Hill
City Clerk
1065 Ridgewood Avenue
Holly Hill, FL 32117

To Whom it May Concern:

The undersigned, as Bidder, hereby declares that the only person or persons interested in the Proposal, as principal or principals, is or are named herein and that no other persons than herein mentioned has any interest in the Proposal or the Contract to which the work pertains; that this Proposal is made without connection or arrangement with any other person, company, or parties making a bid or proposal and that the Proposal is in all respects fair and made in good faith without collusion or fraud.

The Bidder further declares that he has examined the site of the work and that from personal knowledge and experience, or that he/she has made sufficient test holes and/or other subsurface investigations to fully satisfy self that such site is a correct and suitable one for this work and he/she assumes full responsibility therefore; that he/she is familiar with all legal requirements (Federal, State and local laws, ordinances, rules and regulations) pertaining to the Work; that he/she has examined the Drawings and Specifications for the work and from his/her own experience or from professional advice that the Drawings and Specifications are sufficient for the work to be done and he/she has examined the other Contract Documents and all addenda relating thereto, and that he/she has satisfied himself/herself fully, relative to all matters and conditions with respect to the work to which this Proposal pertains.

The Bidder proposes and agrees, if this Proposal is accepted, to contract with the City of Holly Hill, (Owner) in the form of contract specified, to furnish all necessary materials, equipment, machinery, tools, apparatus, transportation, and labor and to perform all work necessary to complete the Work

Attachment: Exhibit H - Saboungi Construction - 22-BG-06 Bid Proposal (2023-R-55 : Fire Station Construction)

specified in the Proposal and other Contract Documents. The Bidder further proposes and agrees to comply in all respects with the time limits for commencement and completion of the Work as stated in the Contract Form.

The Bidder further agrees that the deductions for liquidated damages, as stated in the Contract Form, constitute fixed and agreed liquidated damages to reimburse the Owner for additional costs to the Owner resulting from the Work not being completed within the time limit stated in the Contract Form.

The undersigned agrees to accept as full compensation for completion of the project in full compliance with the Contract Documents, the unit prices for the items named in Section 00 31 00, Schedule of Unit Prices, submitted herein with this Proposal.

The undersigned offers to furnish all materials, equipment and labor for construction of,

FIRE STATION CONSTRUCTION

for the City of Holly Hill, Florida, complete in every respect in strict accordance with the drawings, specifications and any future changes therein. The Contractor shall perform these obligations for the prices listed in the "Schedule of Unit Prices: Section 00 31 00" attached and made a part of this Bid. **The bid total is:**

Three Million Three Hundred Seventy Five Thousand Seven Hundred Dollars
(In Words)

Dollars $ 3,375,700.00 (In Figures)

COMPLETION TIME OF CONTRACT

The Contractor agrees that the work shall be started not later than the date indicated in the Notice to Proceed and that the total work shall be completed within **365 days.**

The Contractor further agrees that for each calendar day, with the exception of Sundays and legal holidays that any work shall remain uncompleted after the stations completion times stipulated above the sum of **$500 (Five Hundred Dollars)** per day shall be deducted from monies due the contractor, not as a penalty, but as liquidated damages. If the Contractor is declared in default in accordance with the provisions of the Specifications, liquidated damages shall be charged as provided herein, and such amounts shall be deducted from the final amount payable to the Contractor or his/her Surety. Should the total amount chargeable as liquidated damages exceed the amount due or payable to the Contractor or his/her Surety, then such excess shall be paid to the Owner by the Contractor or his/her Surety.

Attachment: Exhibit H - Saboungi Construction - 22-BG-06 Bid Proposal (2023-R-55 : Fire Station Construction)

SUPPLEMENTAL REQUIREMENTS

The following documents are attached to and made a condition of this bid:

Schedule of Unit Prices: Section 00 31 00
Statement of Bidder's Qualifications: 00 32 00
Listing of Subcontractors: Section 00 33 00
Listing of Previous Experience: Section 00 33 10
Public Entity Crimes Statement: Section 00 47 00
Anti-Collusion Statement: Section 00 48 00
Drug Free/Tie Preference Statement: Section 00 48 50
Compliance with Public Records Law 00 48 60
W-9 Form 00 48 70
E-Verify Compliance 00 48 80
City of Holly Hill Insurance Requirements: Section 00 80 00A

REQUIRED DISCLOSURE

At its sole discretion, the City of Holly Hill, Florida may reject any bidder the City finds to lack, or whose present or former executive employees, officers, directors, stockholders, partners or owners are found by the City to lack honesty, integrity, or moral responsibility. The discretion of the City may be exercised based on the City's own investigation, public records, or any other reliable sources of information. By submitting a bid, bidder recognizes and accepts that the City may reject the bid based upon the exercise of its sole discretion and bidder waives any claim it might have for damages or other relief resulting from the rejection of its bid based on these grounds.

Attachment: Exhibit H - Saboungi Construction - 22-BG-06 Bid Proposal (2023-R-55 : Fire Station Construction)

SECTION 00 31 00
SCHEDULE OF UNIT PRICES
CITY OF HOLLY HILL

FIRE STATION CONSTRUCTION

BID# 22-BG-06

BID SCHEDULE
FIRE STATION CONSTRUCTION

Saboungi Construction, Inc.
RESPONDENT

Site Work

NO	Description	Unit	Total Price
1	Site Sub Mobilization / Demolition / Site Preparation	LS	$35,230.00
2	Earthwork	LS	$47,750.00
3	Paving	LS	$179,450.00
4	Drainage	LS	$112,500.00
5	Water / Sewer / Misc. Utilities	LS	$121,800.00
6	Landscaping / Irrigation	LS	$54,200.00
6a	Permanent Fencing	LS	$22,740.00
6b	Flagpole	LS	$9,950.00

Building

NO	Description	Unit	Total Price
7	GC Mobilization/Survey/Miscellaneous	LS	**$103,000.00**
8	Supervision	LS	**$89,600.00**
9	General Labor	LS	**$36,400.00**
10	Building Layout / Preparation / Termite Treatment	LS	**$1,500.00**
11	Concrete Work	LS	**$246,400.00**
12	Masonry Work & Stone Panels	LS	**$248,500.00**
13	Steel Framing / Roof Joists and Deck	LS	**$203,800.00**
14	Lt. Ga. Trusses / Miscellaneous Lt. Ga. Exterior Framing	LS	**$45,700.00**
15	Roof System Low Slope /Pitched w/ Insulation System	LS	**$170,000.00**
16	Miscellaneous Framing/Sheeting/Decking/Flashing/Trim	LS	**$49,200.00**
17	Ext Air/Vapor/Water Sealing Masonry Walls	LS	**$15,000.00**
18	Ext/Int Doors/Hardware/Windows/Louvers	LS	**$221,800.00**
19	Interior Framing/GWB Systems/Finishes	LS	**$65,000.00**
20	Miscellaneous Insulation/Sealing	LS	**$19,600.00**
21	Ceiling Systems/Finishes	LS	**$11,100.00**
22	Floor System/Finishes	LS	**$38,600.00**
23	Millwork System	LS	**$73,600.00**
24	Miscellaneous Specialties/Accessories	LS	**$82,500.00**
25	Painting – Interior & Exterior	LS	**$35,000.00**

Attachment: Exhibit H - Saboungi Construction - 22-BG-06 Bid Proposal (2023-R-55 : Fire Station Construction)

Services

NO	Description	Unit	Total Price
26	Plumbing/Gas Systems	LS	**$140,000.00**
27	Fire Protection	LS	**$29,000.00**
28	HVAC	LS	**$165,000.00**
29	Electric System/IT System/Lightning Protection System	LS	**$225,500.00**
30	Emergency Generator System	LS	**$106,130.00**
31	Owner's Unforeseen Contingency Allowance	LS	**$20,000.00**

Contractor Fees

NO	Description	Unit	Total Price
32	General Conditions/Overhead/Profit	**LS**	**$316,400.00**
33	Performance/Payment Bond	**LS**	**$33,750.00**
34	Permit/Fees (as required)	**LS**	**By Owner**

Total Bid Cost $3,375,700.00
(In Figures)

Total Bid Cost Three Million Three Hundred Seventy Five Thousand Seven Hundred Dollars
(In Words)

Unit Pricing Add/Deduct

NO	Description	Unit	Total Price
A	Import Fill for Site Work	**CY**	**$15.00**
B	Export Soil Removal from Site	**CY**	**$3.35**
C	Civil Site Concrete Work for Drive Areas	**CY**	**$480.00**
D	Concrete Work in Above Slab Work Areas	**CY**	**$1,270.00**
E	Concrete for Slab and Foundation Work	**CY**	**$450.00**
F	Civil Site Concrete for Sidewalks	**CY**	**$460.00**

*The Unit Pricing Add/Deduct Section is for the establishment of unit prices in the event that change orders are required.

Submitted by: Hassan Saboungi
Contractor: Saboungi Construction, Inc.
Address: 290A North US Highway 1 Ormond Beach, FL 32174
Telephone: (386) 672-2077
State of Florida Certified General Contractor or Underground Contractor (Required Information)
Licensee: Saboungi Construction, Inc. License No: CGC 013521

Attachment: Exhibit H - Saboungi Construction - 22-BG-06 Bid Proposal (2023-R-55 : Fire Station Construction)

SECTION 00 32 00

STATEMENT OF BIDDER'S QUALIFICATIONS

All questions must be answered and the data given must be clear and comprehensive. This statement must be notarized. If necessary, questions may be answered on separate attached sheets. The bidder may submit any additional information he desires.

A. Name of bidder. **Saboungi Construction, Inc.**

B. Permanent main office address. **290A North US Highway 1 Ormond Beach, FL 32174**

C. When organized. **1982**

D. If a corporation, where incorporated. **Florida**

E. How many years have you been engaged in the contracting business under your present firm or trade name? **41 Years**

F. Contracts on hand: (Schedule these, showing amount of each contract and the appropriate anticipated dates of completion.) **See Attached Construction Projects Ongoing &**

G. General character of work performed by your company. **General Contracting**

H.(1) Have you ever failed to complete any work awarded to you? If so, where and why? **No**

H.(2) Provide list of any lawsuits or judgments filed by or against your company in the last three years, indicating the nature and outcome. **None**

I. Have you ever defaulted on a contract? If so, where and why? **No**

J. List the more important projects recently completed by your company, stating the approximate cost for each and the month and year completed. **See Attached Construction Projects Ongoing & Completed**

K. List your major equipment **Backhoe, Concrete, Saws, Generator**.

L. Experience in construction work similar in type to this project.

M. Background and experience of the principal members of your organization, including the officers. **See Hassan Saboungi and Mahmoud Saboungi Resumes attached**

N. Credit available: $ **100,000.00**

Attachment: Exhibit H - Saboungi Construction - 22-BG-06 Bid Proposal (2023-R-55 : Fire Station Construction)

O. Give bank reference: **Truist Bank - 386-258-2628 Bob Ludlow**

P. Will you, upon request, fill out a detailed financial statement and furnish any other information that may be required by the Owner? **Yes**

Q. The undersigned hereby authorizes and requests any person, firm, or corporation to furnish any information requested by the Owner in verification of the recitals comprising this Statement of Bidder's Qualifications.

Dated at this 29th day of August, 2023.

Saboungi Construction, Inc. / Hassan Saboungi
Name of Bidder
By: Vice President
Title

State of Florida

County of Volusia

Hassan Saboungi being duly sworn deposes and says

that he is the Vice President of Saboungi Construction, Inc. and that

the answers to the City of Holly Hill foregoing questions
Name of Organization
and all statements therein contained are true and correct.

Subscribed and sworn to before me this 29th day of August, 2023.

Notary Public
Casey A Scott
Notary Public (Print or Type) My commission expires:

CASEY A SCOTT
Notary Public - State of Florida
Commission # HH 230774
My Comm. Expires Feb 20, 2026
Bonded through National Notary Assn.

Attachment: Exhibit H - Saboungi Construction - 22-BG-06 Bid Proposal (2023-R-55 : Fire Station Construction)

SABOUNGI CONSTRUCTION, INC

Construction Projects Ongoing & Completed

Project Name	Contract Amount	Completion Date	Owner	Description
Multi Use Walkway Under ISB Bridge	$ 282,310.00	Oct-23	City of Daytona Beach 950 Bellevue Ave. Daytona Beach, FL 32114 386-671-8613 James Nelson	Replace approximately 150 linear feet of wooden boardwalk between City Island and Riverfront Park
Suleiman Residence	$ 2,000,000.00	Starts in Sep-23 In Permitting process	Saud Elsayed Suleiman 1712 Bordeaux Court Port Orange, FL 32128 386-316-9272 Saud Suleiman, M.D.	Custom riverfront 6000 S.F. home
Waterfront Park Dredging, Water Access and Boat Dock	$ 1,261,997.00	Aug-23	City of Palm Coast 160 Lake Avenue Palm Coast, FL 32164 386-986-2463 Mark Tran	Dredging of Intercoastal waterway, storm control, water access and boat dock
Islamic Center of Daytona Beach	$ 1,988,400.00	May-23	Islamic Center of Daytona Beach 347 S. Keech St Daytona Beach, FL 32114 386-334-1676 Khalid Resheidat, P.E.	Conversion of a former large YMCA with demolition, renovation and expansion. Extensive site work & landscape
Port Orange REC Additions and Improvements	$ 4,582,400.00	May-23	City of Port Orange 1000 City Center Circle Port Orange, FL 32129 386-566-1578 Peter Ferreira	Two story and one story building additions of structural steel, CIP concrete, CMU walls, LW insulated concrete with modified bitumenous roof. Renovation of existing 2 story plus gym Storm drainage and utility tie-ins.
South Ormond Recreation Center Gymnasium	$ 1,102,333.11	Feb-23	City of Ormond Beach 22 S. Beach St Ormond Beach, FL 32175 386-676-3269 Shawn Finley, P.E.	New pre-engineered metal building gymnasium Storm drainage and utility tie-ins

SABOUNGI CONSTRUCTION, INC

Construction Projects Ongoing & Completed

Project Name	Contract Amount	Completion Date	Owner	Description
Tina Maria Retention Wall Replacement	$ 84,900.00	Feb-23	Town of Ponce Inlet 43 S. Atlantic Ave Ponce Inlet, FL 32127 386-236-2150 Fred Griffith, P.E.	Demo of existing wood structure retaining walls Construct two new 12 inch thick stepped concrete walls will multiple angles
Lemon Bluff Marine Park	$ 1,959,630.00	Feb-22	County of Volusia 123 W Indiana Ave DeLand FL 32720 386-626-6623 Inga Fegley	New boat ramp, seawall, boardwalk and floating docks along with new parking, gazebos, toilet facilities and park amenities
Plaza Boulevard Beach Approach Phase 1 & 2	$ 809,045.40	Jan-22	County of Volusia 123 W Indiana Ave DeLand FL 32724 Niles Cyzycki 386-248-8072 X20357	New Stormwater collection system, concrete walls and ramp, showers, sun shades, parking and extensive landscape structures
Butts Park Pavilion and Footbridge Renovations	$ 178,451.00	Jan-22	City of Daytona Beach 750 Bellevue Ave Daytona Beach, FL 32114 386-671-8627 Glen Carpenter	Replace wood decking of long footbridge and pavilion over a lake
Halifax Health Pediatrics Renovation	$ 1,323,014.00	Nov-21	Halifax Health Medical Center 303 N Clyde Morris Blvd. Daytona Beach FL 32114 John Lavin 386-425-4000	Renovation of the 6th Floor Pediatric involving reconfiguration of rooms to accommodate new patient rooms, nursing center and reception
18th Avenue Pedestrian Beach Access	$ 253,160.00	Jul-21	County of Volusia 515 S. Atlantic Ave Daytona Beach, FL 32118 386-736-5920 Niles Cyzycki	Pedestrian wood structure with ADA ramp

Attachment: Exhibit H - Saboungi Construction - 22-BG-06 Bid Proposal (2023-R-55 : Fire Station Construction)

SABOUNGI CONSTRUCTION, INC

Construction Projects Ongoing & Completed

Project Name	Contract Amount	Completion Date	Owner	Description
Fire Stations 11 and 32 Parking Expansion	$ 65,688.00	Jun-21	County of Volusia 123 W Indiana Ave DeLand FL 32720 386-626-6623 Inga Fegley	Convert shell to asphalt parking lot with curbs and walks
Ponce Preserve Boardwalk Repair	$ 40,000.00	Jun-21	Town of Ponce Inlet 4300 S Atlantic Ave Ponce Inlet FL 32127 386-236-2180 Fred Griffith, P.E.	Replacement of boardwalk railing
Sperling Sports Complex Field Improvements & Restroom / Conces Building	$ 674,265.00	Apr-21	City of Deland 120 S Florida Ave. DeLand FL 32121-0449 386-626-7197 Keith Riger, P.E	New restroom, concession & shelter building. New soccer field lighting, grandstand with score-keeper room.
North County Lifeguard Tower Replacement	$ 214,000.00	Mar-21	County of Volusia 123 W. Indiana Blvd. DeLand, FL 32720 386-248-1760 x11739 Jose Alvarez	Construct new elevated concrete tower with a single 48" diameter concrete pile foundation
Daytona Beach International Airport Customs Interview Room	$ 36,800.00	Sep-20	County of Volusia 123 W Indiana Ave DeLand FL 32720 386-626-6623 Inga Fegley	Conversion of space into a new customs interview room
Babe James Splash Park	$ 520,986.00	Sep-20	City of New Smyrna Beach 210 Sams Ave. New Smyrna Beach FL 32168 386-410-2613 Michelle Vallance	New splash pad and restroom

Attachment: Exhibit H - Saboungi Construction - 22-BG-06 Bid Proposal (2023-R-55 : Fire Station Construction)

SABOUNGI CONSTRUCTION, INC

Construction Projects Ongoing & Completed

Project Name	Contract Amount	Completion Date	Owner	Description
Majestic Springs Assisted Living Facility	$ 1,814,139.00	Jul-20	Regina Ashihene, M.D., LLC 5856 Boggsford Rd. Port Orange FL 32127 386-451-6871 Regina Asihene, M.D.	Design-Build of a new 16-bed assisted living facility in South Daytona
Hemaidan Williamson Property	$ 649,600.00	Jun-20	Rainbow Development Group 1690 Dunlawton Ave., Ste. 110 Port Orange FL 32127 386-795-4324 Ammar Hemaidan, M.D.	Completion of exterior building finishes. Site work including concrete parking, landscape and irrigation, perimeter fencing
Bay Drive Park Bay Drive off A1A	$ 723,250.00	Apr-20	County of Flagler 1769 E Moody Blvd., Bldg. 2 Bunnell FL 32110 386-313-4001 Amy Kennedy Stroger	New two story concession, restrooms, & observation building. New boardwalk ramp and dune crossover.
Pollard Park Improvements	$ 820,262.00	Apr-20	Town of Ponce Inlet 4300 S Atlantic Ave Ponce Inlet FL 32127 386-236-2180 Fred Griffith, P.E.	New community park featuring pickleball, basketball, raquetball, restroom, gazebo playground, and small parking lot
Halifax Harbor Marina Seawall Restoration	$ 334,757.00	Jan-20	City of Daytona Beach 750 Bellevue Ave Daytona Beach, FL 32114 386-671-8613 Jim Nelson, P.E.	Remove rip rap and construct new 375 lineal foot of seawall
Ocean Center Parking Garage Elevator Vestibule Replacement	$ 55,400.00	Dec-19	County of Volusia 123 W Indiana Ave DeLand FL 32724 386-736-5920 Shaira D. Beato	Aluminum Storefront structure at roof top elevator vestibules

Attachment: Exhibit H - Saboungi Construction - 22-BG-06 Bid Proposal (2023-R-55 : Fire Station Construction)

SABOUNGI CONSTRUCTION, INC

Construction Projects Ongoing & Completed

Project Name	Contract Amount	Completion Date	Owner	Description
Off-Beach Parking	$ 1,950,708.00	Oct-19	County of Volusia 123 W Indiana Ave DeLand FL 32724 386-736-5920 Niles Cyzycki	Demolition of old retail structure with asbestos abatement. New lifeguard maintenance and storage facility and a large off-beach public parking lot
27th Ave Beachfront Park - Site and Drainage Improvements	$ 160,400.00	Jul-19	City of New Smyrna Beach 210 Sams Ave. New Smyrna Beach FL 32168 386-410-2613 Michelle Vallance	Stormwater Drainage Control of beachfront park with site and park amenities
Bethune Point Park Observation Pier Repair	$ 94,842.00	May-19	City of Daytona Beach 750 Bellevue Ave Daytona Beach, FL 32114 386-671-8613 Jim Nelson, P.E.	Structural repairs to observation pier
Swoope Boat Ramp Phase 2 Improvements	$ 635,611.00	Apr-19	City of New Smyrna Beach 210 Sams Ave. New Smyrna Beach FL 32168 386-424-2209 Kyle Fegley, P.E.	Expansion of boat ramp parking lot. Construct center Isle in the boat ramp with a floating dock
Hope Place Library Services Facility Part B	$ 900,000.00	Apr-19	County of Volusia 123 W Indiana Ave DeLand, FL 32720 386-626-6623 Gary Morton	Construction Management with a $900,000 GMP contract for New public community library
atricia Modad edical Office	$ 98,864.00	Apr-19	Palm Coast OBGYN Inc 50 Leanni Way, Suites A3, A4 Palm Coast FL 32137 386-245-6377	Conversion of a vacant 2400 sf bank building into a new medical office.

Attachment: Exhibit H - Saboungi Construction - 22-BG-06 Bid Proposal (2023-R-55 : Fire Station Construction)

SABOUNGI CONSTRUCTION, INC

Construction Projects Ongoing & Completed

Project Name	Contract Amount	Completion Date	Owner	Description
Riverside Park Gazebo Replacement	$ 31,247.00	Nov-18	City of New Smyrna Beach 210 Sams Ave. New Smyrna Beach FL 32168 386-410-2613 Michelle Vallance	Demo existing gazebo and construct a replacement
Public Safety Docking Facility at Vilano Boat Ramp	$ 508,400.00	Oct-18	St. Johns County 500 San Sebastian View St. Augustine FL 32084 904-209-0158 Jaime Locklear	New boat docks for sheriff's office
Hammock Dunes Walkovers	$ 1,087,210.00	Jun-18	Hammock Dunes Owners Ass. PO Box 353338 Palm Coast FL 32135 863-698-2190 Travis Houck	Construct 27 beach access dune crossovers



SABOUNGI CONSTRUCTION, INC.
GENERAL CONTRACTORS
CGC 038667

RESUME

HASSAN SABOUNGI

Vice President / Treasurer
Senior Project Manager / Senior Estimator
Certified General Contractor 1986
State of Florida Licencse Number CGC 038667
Certified Renovator 2010
U.S. Enviromental Protection Agency
Bachelor of Science Business Administration 1982
University of Central Florida

Phone Off 386-672-2077 Fax 386-673-4189 Cell 386-547-4714
Email Hassan@saboungiconstruction.com

Hassan Saboungi has experience in the construction industry since 1982, all of which have been with **Saboungi Construction Inc.** since he co-founded it. Hassan Saboungi has had a major role in the project management and administration of 200+ contracts. He has been a senior construction manager for over 120 private and public contracts. He has performed the services of senior estimator, contract negotiation, pre-construction & value engieering, project management in addition to design-build construction contracts. His additonal duties include risk management and financial oversite of **Saboungi Construction, Inc.** plus other business interests, including Saboungi Development Group, LLC.

Public Safety

Deland Fire Station West 82, Ormond Beach Fire Station 93, Ormond Beach Fire Station 91 Renovations

Health and Medical Services

Halifax Health 6th Floor Pediatrics Renovations, Majestic Springs Assisted Living Facility, Gentle Dental, Eagle Eye Dental, Advanced Medical Center, Advanced Gastroenterology, Volusia OB/GYN, Volusia Internal Medicine Specialists, Atlantic Veterinary Hospital, Tomoka Medical Lab, Laboratory Corporation of America, Children's Medical Center.

Attachment: Exhibit H - Saboungi Construction - 22-BG-06 Bid Proposal (2023-R-55 : Fire Station Construction)

Schools

New Cunningham Creek Elementary School for St Johns County, Additions & Renovations projects at Ormond Beach Middle, Osceola Elementary, DeLand High, Chisholm Elementary, Campbell Middle, Holly Hill Middle, Southwestern Middle and Over 20+ projects for the Volusia County School Board.

Commercial

Nova Fountain Business Park, Twin Fountains Business Center, Longwood Self Storage, All Aboard Storage, Bravo Supermarket, Daytona Helmets.

Site Utility and Infrastructure

Woodland Boulevard Main Street Deland Streetscape, Granada Boulevard Ormond Beach Streetscape, New Smyrna Beach Industrial Park, Tina Maria Retention Wall, Sidewalks and Public safety projects thru out Volusia County

Parks and Recreation

Port Orange REC Center, Port Orange Riverwalk Park, Pollard Park, Sperling Sports Complex, Ormond Beach Andy Romano Beachfront Park. Boardwalk Park & Bandshell Improvements, Port Orange Amphitheater Roof, Port Orange YMCA Additions And Renovations, Spruce Creek Park Improvements, Bethune Point Park, Ormond Beach Gymnastics Building.

Historical Renovations

Daytona Beach Historic Bandshell Exterior Restoration, Clocktower Historic Restoration, MacDonald House, Ames House, Ormond Beach Fire Station No. 91.

Multi-Family

River Oaks Condominum, Multiple U. S. Housing and Urban Development Moderniztion projects.

Worship

Islamic Center of Daytona Beach, Muslim Cemetery of Volusia County.

This is only a partial list of the numerous projects Hassan Saboungi completed with **Saboungi Construction, Inc**.

Attachment: Exhibit H - Saboungi Construction - 22-BG-06 Bid Proposal (2023-R-55 : Fire Station Construction)

Ron DeSantis, Governor

Melanie S. Griffin, Secretary

Florida dbpr

STATE OF FLORIDA
DEPARTMENT OF BUSINESS AND PROFESSIONAL REGULATION

CONSTRUCTION INDUSTRY LICENSING BOARD

THE GENERAL CONTRACTOR HEREIN IS CERTIFIED UNDER THE
PROVISIONS OF CHAPTER 489, FLORIDA STATUTES

SABOUNGI, HASSAN

SABOUNGI CONSTRUCTION INC
290A NORTH U S HIGHWAY #1
ORMOND BEACH FL 32174-4504

LICENSE NUMBER: CGC038667

EXPIRATION DATE: AUGUST 31, 2024

Always verify licenses online at MyFloridaLicense.com

Do not alter this document in any form.

This is your license. It is unlawful for anyone other than the licensee to use this document.

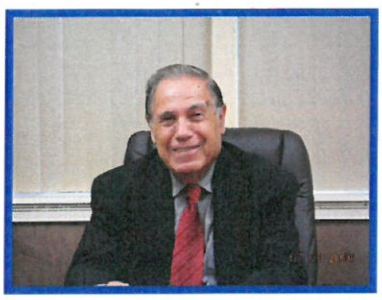

SABOUNGI CONSTRUCTION, INC.
GENERAL CONTRACTORS
CGC 030667

RESUME

Attachment: Exhibit H - Saboungi Construction - 22-BG-06 Bid Proposal (2023-R-55 : Fire Station Construction)

M. "MIKE" SABOUNGI

President
Senior Project Manager / Senior Estimator
Certified General Contractor 1979
State of Florida Licencse Number CGC 013521
Bachelor of Science in Applied Science 1952
Universite De Lyon in Beirut, Lebanon
Masters in Civil Engineering 1954
Universite De Lyon in Beirut, Lebanon

Phone Off 386-672-2077 Fax 386-673-4189 Cell 386-547-4715
Email Mike@saboungiconstruction.com

Mike Saboungi practiced civil engineering from 1954 to 1962. In 1962, he began a contracting business building airports, municipal buildings and highrise condominiums. In 1977, he moved to Florida where upon he acquired his Florida GC license. After working as a sole proprietor, he co-founded **Saboungi Construction, Inc**. in 1982. His vast experience in engineering and construction from 1954 to the present allows him to excel at all challenges. Mike Saboungi has had a major role in the project management and administration of 200+ contracts. He has performed the duties of senior estimator, contract negotiation, pre-construction & value engieering and project management.

Schools

Various Additions & Renovations projects at Seabreeze High, T.D. Taylor High, New Smryna Beach High, Starke Elementary, Osceola Elementary, Pine Trail Elementary, Ormond Beach Elementary, Spruce Creek Elementary and over 20+ projects for the Volusia County School Board.

Public Safety

Flagler Beach Police Station, Volusia County Sheriff Communication Center, Volusia County Sheriff Shooting Range.

Post Offices

Ormond Post Main Office, Palm Coast Main Post Office, Port Orange Post Office fuel station Addition.

Parks and Recreation

Marine Science Center Phase I and Phase II, Indian Lakes Sports Complex, Belle Terre Park, Ralph Carter Park, Seminole Woods Park, Matanzas & Marineland Park, Indian River lagoon Park, Lemon Bluff Marina Park, South Ormond Recreation Center just to name a few.

Site Utility and Infrastructure

Ormond Beach water treatment plant renovations and miles of sidewalk projects for most of the local municipalities.

Health and Medical Services

Flagler County Health Department Center, Turtle Creek Medical Center, LeCompte Orthodontics, Dr. Souheil Moussly Medical Office.

Commercial

Anything Goes Gift Shop, Nationwide Insurance, Speedway Gas Stations, Discount Auto Parts.

Historical Renovations

Tarragona Arch Renovations, Dr. Josie Rogers House, Excelsior Service Center HRS Headquarters for St. Johns County.

Worship

Islamic Center of Daytona Beach, Muslim Cemetery of Volusia County.

This is only a partial list of the numerous projects Mike Saboungi completed with **Saboungi Construction, Inc**.

Attachment: Exhibit H - Saboungi Construction - 22-BG-06 Bid Proposal (2023-R-55 : Fire Station Construction)

SECTION *00 33 00*

The Bidder proposes that the following subcontractors are qualified to perform the referenced work and have successfully done so on recent projects similar in nature and size. Upon approval of subcontractors listed the successful bidder shall not substitute subcontractors without approval from the Architect.

SUBCONTRACTOR	COMPANY NAME	REFERENCE
Site Work/Demo	Drewry Site Development, LLC	1) 2) 3)
Electrical	Local Electric Services, LLC	1) 2) 3)
Mechanical	COR3 Mechanical, LLC	1) 2) 3)
Plumbing	G&W Wellborn Plumbing, LLC	1) 2) 3)
Roofing	NexGen Restoration & Roofing, LLC	1) 2) 3)
Structural Steel	East Coast Metal Structures Corp	1) 2) 3)

END OF SECTION

Attachment: Exhibit H - Saboungi Construction - 22-BG-06 Bid Proposal (2023-R-55 : Fire Station Construction)

SECTION 00 33 10
LISTING OF PREVIOUS EXPERIENCE

The bidder proposes that he/she is qualified to perform the referenced work and has successfully done so on recent projects similar in nature and size. A minimum of three (3) projects must be listed below. The Owner reserves the right to check references and confirm information provided herein.

NO.	PROJECT	OWNER	DESCRIPTION/COST	REFERENCE	DATE WORK STARTED & FINISHED MM/YR TO MM/YR
1	**Fire Station #93**	City of Ormond Beach	New Construction $644,000.00	City Engineering Dept.	Oct. 1999 May 2000
2	**Fire Station #82**	City of DeLand	Deign Build New Construction $486,150.00	City Engineering Dept.	Nov. 2002 May 2003
3	**Addition to Fire Station 64**	City of Deltona	Addition $127,100.00	City of Deltona	August 2013 October 2013

END OF SECTION

Attachment: Exhibit H - Saboungi Construction - 22-BG-06 Bid Proposal (2023-R-55 : Fire Station Construction)

SECTION 00 47 00

SWORN STATEMENT UNDER SECTION 287.133(3)(a), FLORIDA STATUTES, ON PUBLIC ENTITY CRIMES:

This sworn statement is submitted with Bid, Proposal **or** Contract No. 22-BG-06 for the City of Holly Hill, Florida Fire Station Construction.

This sworn statement is submitted by Hassan Saboungi whose business address is 290A North US Highway 1 Ormond Beach, FL 32174 and (if applicable) its Federal Employer Identification Number (FEIN) is 59-2219055. (If the entity has no FEIN, include the Social Security Number of the individual signing this sworn statement: _____.)

My name is Hassan Saboungi any my relationship to the entity named above is Vice President.

I understand that a "public entity crime" as defined in Paragraph 287.133(g), Florida Statutes, means a violation of any state or federal law by a person with respect to and directly related to the transaction of business with any public entity or with an agency or political subdivision of any other state or with the United States, including, but not limited to, any bid or contract for goods or services to be provided to any public entity or an agency or political subdivision of any other state or of the United States and involving antitrust, fraud, theft, bribery, collusion, racketeering, conspiracy, or material misrepresentation.

I understand that "convicted" or "conviction" as defined in Paragraph 287.133(i)(b), Florida Statutes, means a finding of guilt or a conviction of a public entity crime, with or without an adjudication of guilt, in any federal or state trial court of record relating to charges brought by indictment or information after July 1, 1989, as a result of a jury verdict, nonjury trial, or entry of a plea of guilty or nolo contenders.

I understand that an "affiliate" as defined in Paragraph **287.133(l)(a),** Florida Statutes, means:

1. A predecessor or successor of a person convicted of a public entity crime: or

2. An entity under the control of any natural person who is active in the management of the entity and who has been convicted of a public entity crime. The term "affiliate" includes those officers, directors, executives, partners, shareholders, employees, members, and agents who are active in the management of an affiliate. The ownership by one person of shares constituting a controlling interest in another person, or a pooling of equipment or income among persons when not for fair market value under an arm's length agreement,

Attachment: Exhibit H - Saboungi Construction - 22-BG-06 Bid Proposal (2023-R-55 : Fire Station Construction)

shall be a prima facie that one person controls another person. A person who knowingly enters into a joint venture with a
person who has been convicted of a public entity crime in Florida during the preceding 36 months shall be considered an affiliate.

I understand that a "person" as defined in Paragraph 287.133(i)(e), Florida Statutes, means any natural person or entity organized under the laws of any state or of the United States with the legal power to enter into a binding contract and which bids or applies to bid on contracts for the provision of goods or services let by a public entity, or which otherwise transacts or applies to transact business with a public entity. The term "person" includes those officers, directors, executives, partners, shareholders, employees, members, and agents who are active in management of an entity.

Based on information and belief, the statement which I have marked below is true in relation to the entity submitting this sworn statement. (Please indicate which statement applies).

_X_ Neither the entity submitting this sworn statement, nor any officers, directors, executives, partners, shareholders, employees, members or agents who are active in management of the entity, nor any affiliate of the entity have been charged with and convicted of a public entity crime subsequent to July 1, 1989.

_____ The entity submitting this sworn statement, or one or more of the officers, directors, executives, partners, shareholders, employees, members, or agents who are active in management of the entity, or an affiliate of the entity has been charged with and convicted of a public entity crime subsequent to July 1, 1989, AND (Please indicate which additional statement applies.)

_____ There has been a proceeding concerning the conviction before a hearing officer of the State of Florida, Division of Administrative Hearings. The final order entered by the hearing officer did not place the person or affiliate on the convicted vendor list. (Please attach a copy of the final order.)

_____ The person or affiliate was placed on the convicted vendor list. There has been a subsequent proceeding before a hearing officer of the State of Florida, Division of Administrative Hearings. The final order entered by the hearing officer determined that it was in the public interest to remove the person or affiliate from the convicted vendor list. (Please attach a copy of the final order).

Attachment: Exhibit H - Saboungi Construction - 22-BG-06 Bid Proposal (2023-R-55 : Fire Station Construction)

(Signature) _____ Date: August 29, 2023

State of Florida County of Volusia

PERSONALLY APPEARED BEFORE ME, the undersigned authority, Hassan Saboungi who, after first being sworn by me, affixed his/her signature in the space provided above on this 29th day of August, 2023.

Casey A Scott
Notary Public

My Commission Expires:

CASEY A SCOTT
Notary Public - State of Florida
Commission # HH 230774
My Comm. Expires Feb 20, 2026
Bonded through National Notary Assn.

Attachment: Exhibit H - Saboungi Construction - 22-BG-06 Bid Proposal (2023-R-55 : Fire Station Construction)

SECTION 00 48 00
ANTI-COLLUSION STATEMENT

By signing this form, the bidder agrees that this is made without any other understanding, agreement, or connection with any person, corporation, or firm submitting a proposal for the same purpose and that the proposal is in all respects fair and without collusion or fraud.

SIGN in ink in the space provided below. Unsigned bids will be considered incomplete, and will be disqualified, and rejected.

IT IS AGREED BY THE UNDERSIGNED BIDDER THAT THE SIGNING AND DELIVERY OF THE BID REPRESENTS THE BIDDER'S ACCEPTANCE OF THE TERMS AND CONDITIONS OF THE FORGOING SPECIFICATIONS, CONTRACT AND PROVISIONS, AND IF AWARDED, THIS CONTRACT WILL REPRESENT THE AGREEMENT BETWEEN EACH OF THE GOVERNMENTAL PARTIES.

NAME OF FIRM: Saboungi Construction, Inc.

SIGNED BY: _____
(MUST BE SIGNED BY A COMPANY OFFICER OR AUTHORIZED AGENT)

TITLE: Vice President

ADDRESS: 290A North US Highway 1

CITY AND STATE: Ormond Beach, FL 32174

TELEPHONE: (386) 672-2077

COMPLETION TIME: _____

NO proposals will be withdrawn for a period of ninety (90) days subsequent to the opening of the proposals, without the consent of the City of Holly Hill.

NO BID (REASON) _____

_____

_____

END OF SECTION

Attachment: Exhibit H - Saboungi Construction - 22-BG-06 Bid Proposal (2023-R-55 : Fire Station Construction)

SECTION 00 48 50
DRUG FREE/TIE PREFERENCE STATEMENT

In the event of a tie bid a preference is given to vendors submitting a certification with their bid/proposal certifying they have a drug-free workplace in accordance with Section 287.087, Florida Statutes. This requirement affects all public entities of the State and becomes effective January 1, 1991. The special conditions are as follow:

IDENTICAL TIE BIDS - Preference shall be given to businesses with drug-free workplace programs. Whenever two or more bids which are equal with respect to price, quality, and service are received by the State or by any political subdivision for the procurement of commodities or contractual services, a bid received from a business that certifies that it has implemented a drugfree workplace program shall be given preference in the award process. Established procedures for processing tie bids will be followed if none of the tied vendors have a drug-free workplace program. In order to have a drug-free workplace program, a business shall:

1. Publish a statement notifying employees that the unlawful manufacture, distribution, dispensing, possession, or use of a controlled substance is prohibited in the workplace and specifying the actions that will be taken against employees for violations of such prohibition.

2. Inform employees about the dangers of drug abuse in the workplace, the business's policy of maintaining a drug-free workplace, any available drug counseling, rehabilitation and employee assistance programs, and the penalties that may be imposed upon employees for drug abuse violations.

3. Give each employee engaged in providing the commodities or contractual services that are under bid a copy of the statement specified in subsection (1).

4. In the statement specified in subsection (1), notify the employees that, as a condition of working on the commodities or contractual services that are under bid, the employee will abide by the terms of the statement and will notify the employer of any conviction or, or plea of guilty or nolo contendere to, any violation of chapter 893 or of any controlled substance law of the United States or any state, for a violation occurring in the workplace no later than five (5) days after such conviction.

5. Impose a sanction on, or require the satisfaction participation in a drug abuse assistance or rehabilitation program if such is available in the employee's community, by any employee who is so convicted.

6. Make a good faith effort to continue to maintain a drug-free workplace through implementation of this section.

As the person authorized to sign the statement, I certify that this firm complies fully with the above requirements.

VENDOR'S SIGNATURE

END OF SECTION

Attachment: Exhibit H - Saboungi Construction - 22-BG-06 Bid Proposal (2023-R-55 : Fire Station Construction)

SECTION 00 48 60

COMPLIANCE WITH THE PUBLIC RECORDS LAW

Project Number: ITB # 22-BG-06

Upon award recommendation or ten (10) days after opening, submittals become "public records" and shall be subject to public disclosure consistent with Chapter 119, Florida Statutes. Proposers must invoke the exemptions to disclosure provided by law in the response to the solicitation, and must identify the data or other materials to be protected, and must state the reasons why such exclusion from public disclosure is necessary. The submission of a proposal authorizes release of your firm's credit data to the CITY.

If the company submits information exempt from public disclosure, the company must identify with specificity which pages/paragraphs of their bid/proposal package are exempt from the Public Records Act, identifying the specific exemption section that applies to each. The protected information must be submitted to the CITY in a separate envelope marked accordingly.

IF THE CONTRACTOR HAS QUESTIONS REGARDING THE APPLICATION OF CHAPTER 119, FLORIDA STATUTES, TO THE CONTRACTOR'S DUTY TO PROVIDE PUBLIC RECORDS RELATING TO THIS CONTRACT, CONTACT THE CUSTODIAN OF PUBLIC RECORDS AT

Valerie Manning, City Clerk
386-248-9441
vmanning@hollyhillfl.org
1065 Ridgewood Ave
Holly Hill, FL 32117

A provision that requires the contractor to comply with public records laws, specifically to:

1. Keep and maintain public records required by the public agency to perform the service.
2. Upon request from the public agency's custodian of public records, provide the public agency with a copy of the requested records or allow the records to be inspected or copied within a reasonable time at a cost that does not exceed the cost provided in this chapter or as otherwise provided by law.
3. Ensure that public records that are exempt or confidential and exempt from public records disclosure requirements are not disclosed except as authorized by law for the duration of the contract term and following completion of the contract if the contractor does not transfer the records to the public agency.
4. Upon completion of the contract, transfer, at no cost, to the public agency all public records in possession of the contractor or keep and maintain public records required by the public agency to perform the service. If the contractor transfers all public records to the public agency upon completion of the contract, the contractor shall destroy any duplicate public records that are exempt or confidential and exempt from public records disclosure requirements. If the contractor keeps and maintains public records upon completion of the contract, the contractor shall meet all applicable requirements for retaining public records. All records stored electronically must be provided to the public agency, upon request from the public agency's custodian of public records, in a format that is compatible with the information technology systems of the public agency.

By submitting a response to this solicitation, the company agrees to defend the CITY in the event we are forced to litigate the public records status of the company's documents.

Company Name: Saboungi Construction, Inc.

Authorized representative (printed): Hassan Saboungi

Authorized representative (signature): 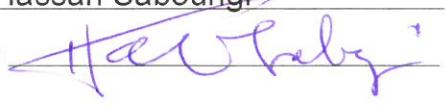

Date: August 29, 2023

END OF SECTION

Attachment: Exhibit H - Saboungi Construction - 22-BG-06 Bid Proposal (2023-R-55 : Fire Station Construction)

SECTION 00 48 70

Form **W-9**
(Rev. November 2017)
Department of the Treasury
Internal Revenue Service

Request for Taxpayer Identification Number and Certification

▶ Go to *www.irs.gov/FormW9* for instructions and the latest information.

Give Form to the requester. Do not send to the IRS.

Print or type. See Specific Instructions on page 3.

1 Name (as shown on your income tax return). Name is required on this line; do not leave this line blank.
Saboungi Construction, Inc.

2 Business name/disregarded entity name, if different from above

3 Check appropriate box for federal tax classification of the person whose name is entered on line 1. Check only **one** of the following seven boxes.

☐ Individual/sole proprietor or single-member LLC ☑ C Corporation ☐ S Corporation ☐ Partnership ☐ Trust/estate

☐ Limited liability company. Enter the tax classification (C=C corporation, S=S corporation, P=Partnership) ▶ _____

Note: Check the appropriate box in the line above for the tax classification of the single-member owner. Do not check LLC if the LLC is classified as a single-member LLC that is disregarded from the owner unless the owner of the LLC is another LLC that is **not** disregarded from the owner for U.S. federal tax purposes. Otherwise, a single-member LLC that is disregarded from the owner should check the appropriate box for the tax classification of its owner.

☐ Other (see instructions) ▶

4 Exemptions (codes apply only to certain entities, not individuals; see instructions on page 3):

Exempt payee code (if any) _____

Exemption from FATCA reporting code (if any) _____

(Applies to accounts maintained outside the U.S.)

5 Address (number, street, and apt. or suite no.) See instructions.
290A North US Highway 1

Requester's name and address (optional)

6 City, state, and ZIP code
Ormond Beach, FL 32174

7 List account number(s) here (optional)

Part I Taxpayer Identification Number (TIN)

Enter your TIN in the appropriate box. The TIN provided must match the name given on line 1 to avoid backup withholding. For individuals, this is generally your social security number (SSN). However, for a resident alien, sole proprietor, or disregarded entity, see the instructions for Part I, later. For other entities, it is your employer identification number (EIN). If you do not have a number, see *How to get a TIN*, later.

Note: If the account is in more than one name, see the instructions for line 1. Also see *What Name and Number To Give the Requester* for guidelines on whose number to enter.

Social security number
[ ][ ][ ] - [ ][ ] - [ ][ ][ ][ ]

or

Employer identification number
5 9 - 2 2 1 9 0 5 5

Part II Certification

Under penalties of perjury, I certify that:

1. The number shown on this form is my correct taxpayer identification number (or I am waiting for a number to be issued to me); and
2. I am not subject to backup withholding because: (a) I am exempt from backup withholding, or (b) I have not been notified by the Internal Revenue Service (IRS) that I am subject to backup withholding as a result of a failure to report all interest or dividends, or (c) the IRS has notified me that I am no longer subject to backup withholding; and
3. I am a U.S. citizen or other U.S. person (defined below); and
4. The FATCA code(s) entered on this form (if any) indicating that I am exempt from FATCA reporting is correct.

Certification instructions. You must cross out item 2 above if you have been notified by the IRS that you are currently subject to backup withholding because you have failed to report all interest and dividends on your tax return. For real estate transactions, item 2 does not apply. For mortgage interest paid, acquisition or abandonment of secured property, cancellation of debt, contributions to an individual retirement arrangement (IRA), and generally, payments other than interest and dividends, you are not required to sign the certification, but you must provide your correct TIN. See the instructions for Part II, later.

Sign Here Signature of U.S. person ▶ [signature] Date ▶ June 29, 2023

General Instructions

Section references are to the Internal Revenue Code unless otherwise noted.

Future developments. For the latest information about developments related to Form W-9 and its instructions, such as legislation enacted after they were published, go to *www.irs.gov/FormW9*.

Purpose of Form

An individual or entity (Form W-9 requester) who is required to file an information return with the IRS must obtain your correct taxpayer identification number (TIN) which may be your social security number (SSN), individual taxpayer identification number (ITIN), adoption taxpayer identification number (ATIN), or employer identification number (EIN), to report on an information return the amount paid to you, or other amount reportable on an information return. Examples of information returns include, but are not limited to, the following.

- Form 1099-INT (interest earned or paid)
- Form 1099-DIV (dividends, including those from stocks or mutual funds)
- Form 1099-MISC (various types of income, prizes, awards, or gross proceeds)
- Form 1099-B (stock or mutual fund sales and certain other transactions by brokers)
- Form 1099-S (proceeds from real estate transactions)
- Form 1099-K (merchant card and third party network transactions)
- Form 1098 (home mortgage interest), 1098-E (student loan interest), 1098-T (tuition)
- Form 1099-C (canceled debt)
- Form 1099-A (acquisition or abandonment of secured property)

Use Form W-9 only if you are a U.S. person (including a resident alien), to provide your correct TIN.

If you do not return Form W-9 to the requester with a TIN, you might be subject to backup withholding. See What is backup withholding, *later.*

Attachment: Exhibit H - Saboungi Construction - 22-BG-06 Bid Proposal (2023-R-55 : Fire Station Construction)

SECTION 00 48 80

E-VERIFY COMPLIANCE

Affidavit of E-Verify Requirements
Compliance

ITB 22-BG-06

The Consultant/Contractor agrees to comply with Section 448.093, Florida Statutes, and to incorporate in all subcontracts the obligation to comply with Section 448.093, Florida Statutes.

1. The Consultant/Contractor shall utilize the U.S. Department of Homeland Security's E-Verify system to verify the employment eligibility of all new employees hired by the Consultant/Contractor during the term of the Agreement and shall expressly require any subcontractors performing work or providing services pursuant to the Agreement to likewise utilize the U.S. Department of Homeland Security's E-Verify system to verify the employment eligibility of all new employees hired by the subconsultant/subcontractor during the Agreement term.

2. That the Consultant/Contractor understands and agrees that its failure to comply with the verification requirements as set forth herein or its failure to ensure that all employees and subconsultant/subcontractors performing work under this Agreement are legally authorized to work in the United States and the State of Florida constitute a breach of this Agreement for which the City may immediately terminate the Agreement without notice and without penalty. The Consultant/Contractor further understands and agrees that in the event of such termination, the Consultant/Contractor shall be liable to the City for any costs incurred by the City as a result of the Consultant's/Contractor's breach

Consultant/Contractor shall execute and return the Affidavit of E-Verify Requirements Compliance to City. IN WITNESS WHEREOF, the parties have made and executed this Agreement for the purposes stated above.

Saboungi Construction, Inc.

Consultant/Contractor Name and Address

Signature

Hassan Saboungi, Vice President

Name and Title

Attachment: Exhibit H - Saboungi Construction - 22-BG-06 Bid Proposal (2023-R-55 : Fire Station Construction)

CERTIFICATE OF LIABILITY INSURANCE

DATE (MM/DD/YYYY): 08/04/2023

THIS CERTIFICATE IS ISSUED AS A MATTER OF INFORMATION ONLY AND CONFERS NO RIGHTS UPON THE CERTIFICATE HOLDER. THIS CERTIFICATE DOES NOT AFFIRMATIVELY OR NEGATIVELY AMEND, EXTEND OR ALTER THE COVERAGE AFFORDED BY THE POLICIES BELOW. THIS CERTIFICATE OF INSURANCE DOES NOT CONSTITUTE A CONTRACT BETWEEN THE ISSUING INSURER(S), AUTHORIZED REPRESENTATIVE OR PRODUCER, AND THE CERTIFICATE HOLDER.

IMPORTANT: If the certificate holder is an ADDITIONAL INSURED, the policy(ies) must have ADDITIONAL INSURED provisions or be endorsed. If SUBROGATION IS WAIVED, subject to the terms and conditions of the policy, certain policies may require an endorsement. A statement on this certificate does not confer rights to the certificate holder in lieu of such endorsement(s).

PRODUCER
Brown & Brown of Florida, Inc.
P.O. Box 2412
Daytona Beach FL 32115-2415

CONTACT NAME: Julie Kuhlman
PHONE (A/C, No, Ext): (386) 252-9601 **FAX (A/C, No):** (386) 239-5729
E-MAIL ADDRESS: Julie.Kuhlman@bbrown.com

INSURER(S) AFFORDING COVERAGE		NAIC #
INSURER A :	Aspen Specialty Insurance Company	10717
INSURER B :	Travelers Excess and Surplus Lines Company	29696
INSURER C :	XL Specialty Insurance Company	37885
INSURER D :	Insurance Company of the West	27847
INSURER E :	Westchester Surplus Lines Company	
INSURER F :		

INSURED
SABOUNGI CONSTRUCTION, INC.
290-A NORTH US HIGHWAY 1
ORMOND BEACH FL 32174

COVERAGES **CERTIFICATE NUMBER:** 23-24 **REVISION NUMBER:**

THIS IS TO CERTIFY THAT THE POLICIES OF INSURANCE LISTED BELOW HAVE BEEN ISSUED TO THE INSURED NAMED ABOVE FOR THE POLICY PERIOD INDICATED. NOTWITHSTANDING ANY REQUIREMENT, TERM OR CONDITION OF ANY CONTRACT OR OTHER DOCUMENT WITH RESPECT TO WHICH THIS CERTIFICATE MAY BE ISSUED OR MAY PERTAIN, THE INSURANCE AFFORDED BY THE POLICIES DESCRIBED HEREIN IS SUBJECT TO ALL THE TERMS, EXCLUSIONS AND CONDITIONS OF SUCH POLICIES. LIMITS SHOWN MAY HAVE BEEN REDUCED BY PAID CLAIMS.

INSR LTR	TYPE OF INSURANCE	ADDL INSD	SUBR WVD	POLICY NUMBER	POLICY EFF (MM/DD/YYYY)	POLICY EXP (MM/DD/YYYY)	LIMITS	
A	X COMMERCIAL GENERAL LIABILITY CLAIMS-MADE X OCCUR GEN'L AGGREGATE LIMIT APPLIES PER: POLICY X PRO-JECT LOC OTHER:			CR00VCF23	03/07/2023	01/31/2024	EACH OCCURRENCE DAMAGE TO RENTED PREMISES (Ea occurrence) MED EXP (Any one person) PERSONAL & ADV INJURY GENERAL AGGREGATE PRODUCTS - COMP/OP AGG	$ 1,000,000 $ 50,000 $ $ 1,000,000 $ 2,000,000 $ 2,000,000
	AUTOMOBILE LIABILITY ANY AUTO OWNED AUTOS ONLY HIRED AUTOS ONLY SCHEDULED AUTOS NON-OWNED AUTOS ONLY						COMBINED SINGLE LIMIT (Ea accident) BODILY INJURY (Per person) BODILY INJURY (Per accident) PROPERTY DAMAGE (Per accident)	$ $ $ $
B	UMBRELLA LIAB X OCCUR X EXCESS LIAB CLAIMS-MADE DED X RETENTION $ 10,000			CUP-9S688253-23-NF	03/07/2023	01/31/2024	EACH OCCURRENCE AGGREGATE PROD/COMPL OPS	$ 5,000,000 $ 5,000,000 $ 5,000,000
D	WORKERS COMPENSATION AND EMPLOYERS' LIABILITY ANY PROPRIETOR/PARTNER/EXECUTIVE OFFICER/MEMBER EXCLUDED? (Mandatory in NH) Y/N: Y If yes, describe under DESCRIPTION OF OPERATIONS below	N / A		WFL 5053442 03	01/31/2023	01/31/2024	X PER STATUTE OTH-ER E.L. EACH ACCIDENT E.L. DISEASE - EA EMPLOYEE E.L. DISEASE - POLICY LIMIT	 $ 1,000,000 $ 1,000,000 $ 1,000,000
C	INLAND MARINE			UM00061199MA23A	01/31/2023	01/31/2024	LEASED/RENTED DED	$100,000 $1,000

DESCRIPTION OF OPERATIONS / LOCATIONS / VEHICLES (ACORD 101, Additional Remarks Schedule, may be attached if more space is required)

SEE NOTES FOR POLICY COVERAGE FORMS
RE: BID# 22-BG-06 CITY OF HOLLY HILL, FLORIDA FIRE STATION CONSTRUCTION.
THE CITY OF HOLLY HILL, ELECTED OFFICIALS AND EMPLOYEES, AND THE ADJACENT PROPERTY OWNERS ARE ADDITIONAL INSURED AND WAIVER OF SUBROGATION APPLIES AS REQUIRED BY WRITTEN CONTRACT AND IF APPLICABLE, PER THE FORMS LISTED ON THE ATTACHED ADDITIONAL REMARKS SCHEDULE.

CERTIFICATE HOLDER
THE CITY OF HOLLY HILL
1065 RIDGEWOOD AVENUE
HOLLY HILL FL 32117

CANCELLATION
SHOULD ANY OF THE ABOVE DESCRIBED POLICIES BE CANCELLED BEFORE THE EXPIRATION DATE THEREOF, NOTICE WILL BE DELIVERED IN ACCORDANCE WITH THE POLICY PROVISIONS.

AUTHORIZED REPRESENTATIVE

© 1988-2015 ACORD CORPORATION. All rights reserved.

Attachment: Exhibit H - Saboungi Construction - 22-BG-06 Bid Proposal (2023-R-55 : Fire Station Construction)

AGENCY CUSTOMER ID: _____

LOC #: _____

ADDITIONAL REMARKS SCHEDULE

Page ____ of ____

AGENCY	NAMED INSURED
Brown & Brown of Florida, Inc.	SABOUNGI CONSTRUCTION, INC.
POLICY NUMBER	
CARRIER / NAIC CODE	EFFECTIVE DATE:

ADDITIONAL REMARKS

THIS ADDITIONAL REMARKS FORM IS A SCHEDULE TO ACORD FORM,

FORM NUMBER: 25 **FORM TITLE:** Certificate of Liability Insurance: Notes

CONTRACTOR'S POLLUTION LIABILITY
INSURER E
POLICY #G7165722A 002
TERM: 01/31/2023 - 01/31/2024
AGGREGATE: $2,000,000
CONTRACTOR'S POLLUTION CONDITION LIMIT: $1,000,000

CURRENT BLANKET POLICY FORMS

GENERAL LIABILITY:
1) CG2010 0413- ADDITIONAL INSURED - OWNERS, LESSEES, OR CONTRACTORS - SCHEDULED PERSON OR ORGANIZATION (ADDITIONAL INSURED-ONGOING OPERATIONS)
2) CG2037 0413- ADDITIONAL INSURED - OWNERS, LESSEES, OR CONTRACTORS - COMPLETED OPERATIONS
3) CG2028 0413- ADDITIONAL INSURED-LESSOR OF LEASED EQUIPMENT
4) CG2404 0509 - WAIVER OF TRANSFER OF RIGHTS OF RECOVERY AGAINST OTHERS TO US
5) CG2001 0413- PRIMARY AND NONCONTRIBUTORY - OTHER INSURANCE CONDITION

POLLUTION:
1) ENV3250 1218 - ADDITIONAL INSURED ENDORSEMENT - ONGOING WORK OR OPERATIONS
2) ENV3251 1218 - ADDITIONAL INSURED ENDORSEMENT - PRODUCTS-COMPLETED OPERATIONS HAZARD
3) ENV3253 1218 - PRIMAR AND NON-CONTRIBUTORY - OTHER INSURANCE CONDITION
4) ENV3143 0305 - WAIVER OF TRANSFER OF RIGHTS OF RECOVERY AGAINST OTHERS TO US

WORKERS COMPENSATION:
1) WC000313 0484 - WAIVER OF OUR RIGHT TO RECOVER FROM OTHERS ENDORSEMENT

EXCESS LIABILITY:
1) EU0001 0716 - EXCESS FOLLOW - FORM UMBRELLA LIABILITY INSURANCE - (FOLLOW FORM OVER THE GENERAL LIABILITY, AUTO LIABILITY AND EMPLOYERS LIABILITY)

ACORD 101 (2008/01) © 2008 ACORD CORPORATION. All rights reserved.
The ACORD name and logo are registered marks of ACORD

Attachment: Exhibit H - Saboungi Construction - 22-BG-06 Bid Proposal (2023-R-55 : Fire Station Construction)

ACORD®

CERTIFICATE OF LIABILITY INSURANCE

DATE (MM/DD/YYYY)
8/29/2023

THIS CERTIFICATE IS ISSUED AS A MATTER OF INFORMATION ONLY AND CONFERS NO RIGHTS UPON THE CERTIFICATE HOLDER. THIS CERTIFICATE DOES NOT AFFIRMATIVELY OR NEGATIVELY AMEND, EXTEND OR ALTER THE COVERAGE AFFORDED BY THE POLICIES BELOW. THIS CERTIFICATE OF INSURANCE DOES NOT CONSTITUTE A CONTRACT BETWEEN THE ISSUING INSURER(S), AUTHORIZED REPRESENTATIVE OR PRODUCER, AND THE CERTIFICATE HOLDER.

IMPORTANT: If the certificate holder is an ADDITIONAL INSURED, the policy(ies) must have ADDITIONAL INSURED provisions or be endorsed. If SUBROGATION IS WAIVED, subject to the terms and conditions of the policy, certain policies may require an endorsement. A statement on this certificate does not confer rights to the certificate holder in lieu of such endorsement(s).

PRODUCER
Foundation Risk Partners, Corp. dba Foundation Risk Partners of Florida
1540 Cornerstone Blvd., Suite 200
Daytona Beach FL 32117
License#: L100460

CONTACT NAME:
PHONE (A/C, No, Ext): 386-677-4761 **FAX (A/C, No):** 386-673-5370
E-MAIL ADDRESS: email@HIPFlorida.com

INSURER(S) AFFORDING COVERAGE	NAIC #
INSURER A : Auto-Owners Insurance Company	18988
INSURER B :	
INSURER C :	
INSURER D :	
INSURER E :	
INSURER F :	

INSURED
Saboungi Construction Inc
Hassan Saboungi
290A N. US 1
Ormond Beach FL 32174
SABOCON-01

COVERAGES **CERTIFICATE NUMBER:** 861670799 **REVISION NUMBER:**

THIS IS TO CERTIFY THAT THE POLICIES OF INSURANCE LISTED BELOW HAVE BEEN ISSUED TO THE INSURED NAMED ABOVE FOR THE POLICY PERIOD INDICATED. NOTWITHSTANDING ANY REQUIREMENT, TERM OR CONDITION OF ANY CONTRACT OR OTHER DOCUMENT WITH RESPECT TO WHICH THIS CERTIFICATE MAY BE ISSUED OR MAY PERTAIN, THE INSURANCE AFFORDED BY THE POLICIES DESCRIBED HEREIN IS SUBJECT TO ALL THE TERMS, EXCLUSIONS AND CONDITIONS OF SUCH POLICIES. LIMITS SHOWN MAY HAVE BEEN REDUCED BY PAID CLAIMS.

INSR LTR	TYPE OF INSURANCE	ADDL INSD	SUBR WVD	POLICY NUMBER	POLICY EFF (MM/DD/YYYY)	POLICY EXP (MM/DD/YYYY)	LIMITS	
	COMMERCIAL GENERAL LIABILITY						EACH OCCURRENCE	$
	☐ CLAIMS-MADE ☐ OCCUR						DAMAGE TO RENTED PREMISES (Ea occurrence)	$
							MED EXP (Any one person)	$
							PERSONAL & ADV INJURY	$
	GEN'L AGGREGATE LIMIT APPLIES PER:						GENERAL AGGREGATE	$
	☐ POLICY ☐ PRO-JECT ☐ LOC						PRODUCTS - COMP/OP AGG	$
	OTHER:							$
A	AUTOMOBILE LIABILITY			4140895900	6/12/2023	6/12/2024	COMBINED SINGLE LIMIT (Ea accident)	$ 1,000,000
	X ANY AUTO						BODILY INJURY (Per person)	$
	☐ OWNED AUTOS ONLY ☐ SCHEDULED AUTOS						BODILY INJURY (Per accident)	$
	☐ HIRED AUTOS ONLY X NON-OWNED AUTOS ONLY						PROPERTY DAMAGE (Per accident)	$
								$
	☐ UMBRELLA LIAB ☐ OCCUR						EACH OCCURRENCE	$
	☐ EXCESS LIAB ☐ CLAIMS-MADE						AGGREGATE	$
	☐ DED ☐ RETENTION $							$
	WORKERS COMPENSATION AND EMPLOYERS' LIABILITY Y / N						☐ PER STATUTE ☐ OTH-ER	
	ANYPROPRIETOR/PARTNER/EXECUTIVE OFFICER/MEMBER EXCLUDED? ☐ (Mandatory in NH)	N / A					E.L. EACH ACCIDENT	$
	If yes, describe under DESCRIPTION OF OPERATIONS below						E.L. DISEASE - EA EMPLOYEE	$
							E.L. DISEASE - POLICY LIMIT	$

DESCRIPTION OF OPERATIONS / LOCATIONS / VEHICLES (ACORD 101, Additional Remarks Schedule, may be attached if more space is required)
Re: Fire Station Construction

CERTIFICATE HOLDER

City of Holly Hill
City Clerk
1065 Ridgewood Avenue
Holly Hill FL 32117

CANCELLATION

SHOULD ANY OF THE ABOVE DESCRIBED POLICIES BE CANCELLED BEFORE THE EXPIRATION DATE THEREOF, NOTICE WILL BE DELIVERED IN ACCORDANCE WITH THE POLICY PROVISIONS.

AUTHORIZED REPRESENTATIVE
Charles H. Fydrich

© 1988-2015 ACORD CORPORATION. All rights reserved.

The ACORD name and logo are registered marks of ACORD

Attachment: Exhibit H - Saboungi Construction - 22-BG-06 Bid Proposal (2023-R-55 : Fire Station Construction)

THE AMERICAN INSTITUTE OF ARCHITECTS

AIA Document A310

Bid Bond

KNOW ALL MEN BY THESE PRESENTS, THAT WE **Saboungi Construction, Inc.**
290A North US Highway 1, Ormond Beach, FL 32174
as Principal, hereinafter called the Principal, and **Westfield Insurance Company**
P. O. Box 5001, Westfield Center, OH 44251
a corporation duly organized under the laws of the State of **OHIO**
as Surety, hereinafter called the Surety, are held and firmly bound unto **City of Holly Hill**
1065 Ridgewood Avenue, Holly Hill, Florida 32117
as Obligee, hereinafter called the Obligee, in the sum of **-FIVE PERCENT (5%) OF PROPOSED BID-**
Dollars ($ **---5%----**),
for the payment of which sum well and truly to be made, the said Principal and the said Surety, bind ourselves, our heirs, executors, administrators, successors and assigns, jointly and severally, firmly by these presents.

WHEREAS, the Principal has submitted a bid for **Fire Station Construction – Bid No. 22-BG-06**

NOW, THEREFORE, if the Obligee shall accept the bid of the Principal and the Principal shall enter into a Contract with the Obligee in accordance with the terms of such bid, and give such bond or bonds as may be specified in the bidding or Contract Documents with good and sufficient surety for the faithful performance of such Contract and for the prompt payment of labor and materials furnished in the prosecution thereof, or in the event of the failure of the Principal to enter such Contract and give such bond or bonds, if the Principal shall pay to the Obligee the difference not to exceed the penalty hereof between the amount specified in said bid and such larger amount for which the Obligee may in good faith contract with another party to perform the Work covered by said bid, then this obligation shall be null and void, otherwise to remain in full force and effect.

Signed and sealed this **29th** day of **August**, **2023**

(Witness)

Saboungi Construction, Inc. (Principal) (Seal)
By: , V.P. (Title)

Natalie C. Demers (Witness)

Westfield Insurance Company (Surety) (Seal)
By: *Attorney-in-Fact* **Don Bramlage** (Title)

AIA DOCUMENT A310 ● BID BOND ● AIA ● FEBRUARY 1970 ED. ● THE AMERICAN INSTITUTE OF ARCHITECTS, 1735 N.Y. AVE., N.W., WASHINGTON, D.C. 20006

Attachment: Exhibit H - Saboungi Construction - 22-BG-06 Bid Proposal (2023-R-55 : Fire Station Construction)

General Power of Attorney

CERTIFIED COPY

POWER NO. **0994592 00**

Westfield Insurance Co.
Westfield National Insurance Co.
Ohio Farmers Insurance Co.

Westfield Center, Ohio

Know All Men by These Presents, That WESTFIELD INSURANCE COMPANY, WESTFIELD NATIONAL INSURANCE COMPANY and OHIO FARMERS INSURANCE COMPANY, corporations, hereinafter referred to individually as a "Company" and collectively as "Companies," duly organized and existing under the laws of the State of Ohio, and having its principal office in Westfield Center, Medina County, Ohio, do by these presents make, constitute and appoint

DON BRAMLAGE, LAURA D. MOSHOLDER, EDWARD M. CLARK, JOINTLY OR SEVERALLY

of **SANFORD** and State of **FL** its true and lawful Attorney(s)-in-Fact, with full power and authority hereby conferred in its name, place and stead, to execute, acknowledge and deliver **any and all bonds, recognizances, undertakings, or other instruments or contracts of suretyship.**

LIMITATION: THIS POWER OF ATTORNEY CANNOT BE USED TO EXECUTE NOTE GUARANTEE, MORTGAGE DEFICIENCY, MORTGAGE GUARANTEE, OR BANK DEPOSITORY BONDS.

and to bind any of the Companies thereby as fully and to the same extent as if such bonds were signed by the President, sealed with the corporate seal of the applicable Company and duly attested by its Secretary, hereby ratifying and confirming all that the said Attorney(s)-in-Fact may do in the premises. Said appointment is made under and by authority of the following resolution adopted by the Board of Directors of each of the WESTFIELD INSURANCE COMPANY, WESTFIELD NATIONAL INSURANCE COMPANY and OHIO FARMERS INSURANCE COMPANY:

"Be It Resolved, that the President, any Senior Executive, any Secretary or any Fidelity & Surety Operations Executive or other Executive shall be and is hereby vested with full power and authority to appoint any one or more suitable persons as Attorney(s)-in-Fact to represent and act for and on behalf of the Company subject to the following provisions:

The Attorney-in-Fact. may be given full power and authority for and in the name of and on behalf of the Company, to execute, acknowledge and deliver, any and all bonds, recognizances, contracts, agreements of indemnity and other conditional or obligatory undertakings and any and all notices and documents canceling or terminating the Company's liability thereunder, and any such instruments so executed by any such Attorney-in-Fact shall be as binding upon the Company as if signed by the President and sealed and attested by the Corporate Secretary."

"Be it Further Resolved, that the signature of any such designated person and the seal of the Company heretofore or hereafter affixed to any power of attorney or any certificate relating thereto by facsimile, and any power of attorney or certificate bearing facsimile signatures or facsimile seal shall be valid and binding upon the Company with respect to any bond or undertaking to which it is attached." (Each adopted at a meeting held on February 8, 2000).

In Witness Whereof, WESTFIELD INSURANCE COMPANY, WESTFIELD NATIONAL INSURANCE COMPANY and OHIO FARMERS INSURANCE COMPANY have caused these presents to be signed by their **National Surety Leader** and **Senior Executive** and their corporate seals to be hereto affixed this **20th** day of **FEBRUARY** A.D., **2020** .

Corporate Seals Affixed

WESTFIELD INSURANCE COMPANY
WESTFIELD NATIONAL INSURANCE COMPANY
OHIO FARMERS INSURANCE COMPANY

By:
Gary W. Stumper, *National Surety Leader* and *Senior Executive*

State of Ohio
County of Medina ss.:

On this **20th** day of **FEBRUARY** A.D., **2020** , before me personally came **Gary W. Stumper** to me known, who, being by me duly sworn, did depose and say, that he resides in **Hartford, CT;** that he is **National Surety Leader** and **Senior Executive** of WESTFIELD INSURANCE COMPANY, WESTFIELD NATIONAL INSURANCE COMPANY and OHIO FARMERS INSURANCE COMPANY, the companies described in and which executed the above instrument; that he knows the seals of said Companies; that the seals affixed to said instrument are such corporate seals; that they were so affixed by order of the Boards of Directors of said Companies; and that he signed his name thereto by like order.

Notarial Seal Affixed

State of Ohio
County of Medina ss.:

David A. Kotnik, Attorney at Law, *Notary Public*
My Commission Does Not Expire (Sec. 147.03 Ohio Revised Code)

I, **Frank A. Carrino,** Secretary of WESTFIELD INSURANCE COMPANY, WESTFIELD NATIONAL INSURANCE COMPANY and OHIO FARMERS INSURANCE COMPANY, do hereby certify that the above and foregoing is a true and correct copy of a Power of Attorney, executed by said Companies, which is still in full force and effect; and furthermore, the resolutions of the Boards of Directors, set out in the Power of Attorney are in full force and effect.

In Witness Whereof, I have hereunto set my hand and affixed the seals of said Companies at Westfield Center, Ohio, this **29th** day of **August** A.D., **2023** .

Frank A Carrino *Secretary*

Frank A. Carrino, *Secretary*

BPOAC2 (combined) (06-02)

Attachment: Exhibit H - Saboungi Construction - 22-BG-06 Bid Proposal (2023-R-55 : Fire Station Construction)

HALL & OGLE ARCHITECTS, INC.
AA-C000925

208 Magnolia Avenue
Daytona Beach, Florida 32114

PH: (386)255 -6163
FAX: (386)257-5650

Steve Juengst, Admin. Manager
Department of Public Works
City of Holly Hill, FL. 32117

6-September-2023

Re: Replacement Fire Station #96
City of Holly Hill
Fire Station Construction
Bid No. 22-BG-06
Architects Recommendation of Contract Award

Mr. Juengst:

As you know we received bids for this project on 29-Aug.-23 and we have reviewed the bid packages for this project. Saboungi Construction, Inc. is the low bidder in the amount of $3,375,700.00 for the total lump sum amount. We have reviewed their bid package and requested additional information on their subcontractor list. We are familiar with some of their subcontractors. We made calls and talked with our engineers, some of the subs, and some of the references provided.

I have had a couple of conversations with Hassan Saboungi (V.P.) and he is good with their bid number and is confident they can do the work on time and in budget (bid number). It appears they meet the requirements of the bid package.

Based on our review, it is our opinion that Saboungi Construction, Inc. is capable of completing the above reference project successfully in the contract time and per the plans and specifications and all bid package criteria.

Therefore, we recommend that the City of Holly Hill award this project to Saboungi construction, Inc. We look forward to working with your team and the contractor's team for this much needed new fire station.

Please call if you need further assistance.

Respectfully,

John E. Hall, Principal/President
Hall & Ogle Architects, Inc.

Attachment

Attachment: Exhibit I - Architects Recommendation of Contract Award (2023-R-55 : Fire Station Construction)

SECTION 00 31 00
SCHEDULE OF UNIT PRICES
CITY OF HOLLY HILL

FIRE STATION CONSTRUCTION

BID# 22-BG-06

BID SCHEDULE
FIRE STATION CONSTRUCTION

Saboungi Construction, Inc.
RESPONDENT

Site Work

NO	Description	Unit	Total Price
1	Site Sub Mobilization / Demolition / Site Preparation	LS	$35,230.00
2	Earthwork	LS	$47,750.00
3	Paving	LS	$179,450.00
4	Drainage	LS	$112,500.00
5	Water / Sewer / Misc. Utilities	LS	$121,800.00
6	Landscaping / Irrigation	LS	$54,200.00
6a	Permanent Fencing	LS	$22,740.00
6b	Flagpole	LS	$9,950.00

Building

NO	Description	Unit	Total Price
7	GC Mobilization/Survey/Miscellaneous	LS	**$103,000.00**
8	Supervision	LS	**$89,600.00**
9	General Labor	LS	**$36,400.00**
10	Building Layout / Preparation / Termite Treatment	LS	**$1,500.00**
11	Concrete Work	LS	**$246,400.00**
12	Masonry Work & Stone Panels	LS	**$248,500.00**
13	Steel Framing / Roof Joists and Deck	LS	**$203,800.00**
14	Lt. Ga. Trusses / Miscellaneous Lt. Ga. Exterior Framing	LS	**$45,700.00**
15	Roof System Low Slope /Pitched w/ Insulation System	LS	**$170,000.00**
16	Miscellaneous Framing/Sheeting/Decking/Flashing/Trim	LS	**$49,200.00**
17	Ext Air/Vapor/Water Sealing Masonry Walls	LS	**$15,000.00**
18	Ext/Int Doors/Hardware/Windows/Louvers	LS	**$221,800.00**
19	Interior Framing/GWB Systems/Finishes	LS	**$65,000.00**
20	Miscellaneous Insulation/Sealing	LS	**$19,600.00**
21	Ceiling Systems/Finishes	LS	**$11,100.00**
22	Floor System/Finishes	LS	**$38,600.00**
23	Millwork System	LS	**$73,600.00**
24	Miscellaneous Specialties/Accessories	LS	**$82,500.00**
25	Painting – Interior & Exterior	LS	**$35,000.00**

Attachment: Exhibit I - Architects Recommendation of Contract Award (2023-R-55 : Fire Station Construction)

Services

NO	Description	Unit	Total Price
26	Plumbing/Gas Systems	LS	**$140,000.00**
27	Fire Protection	LS	**$29,000.00**
28	HVAC	LS	**$165,000.00**
29	Electric System/IT System/Lightning Protection System	LS	**$225,500.00**
30	Emergency Generator System	LS	**$106,130.00**
31	Owner's Unforeseen Contingency Allowance	LS	**$20,000.00**

Contractor Fees

NO	Description	Unit	Total Price
32	General Conditions/Overhead/Profit	**LS**	**$316,400.00**
33	Performance/Payment Bond	**LS**	**$33,750.00**
34	Permit/Fees (as required)	**LS**	**By Owner**

Total Bid Cost $3,375,700.00
(In Figures)

Total Bid Cost Three Million Three Hundred Seventy Five Thousand Seven Hundred Dollars
(In Words)

Unit Pricing Add/Deduct

NO	Description	Unit	Total Price
A	Import Fill for Site Work	**CY**	**$15.00**
B	Export Soil Removal from Site	**CY**	**$3.35**
C	Civil Site Concrete Work for Drive Areas	**CY**	**$480.00**
D	Concrete Work in Above Slab Work Areas	**CY**	**$1,270.00**
E	Concrete for Slab and Foundation Work	**CY**	**$450.00**
F	Civil Site Concrete for Sidewalks	**CY**	**$460.00**

*The Unit Pricing Add/Deduct Section is for the establishment of unit prices in the event that change orders are required.

Submitted by: Hassan Saboungi
Contractor: Saboungi Construction, Inc.
Address: 290A North US Highway 1 Ormond Beach, FL 32174
Telephone: (386) 672-2077
State of Florida Certified General Contractor or Underground Contractor (Required Information)
Licensee: Saboungi Construction, Inc. License No: CGC 013521

Attachment: Exhibit I - Architects Recommendation of Contract Award (2023-R-55 : Fire Station Construction)

HOLLY HILL
FLORIDA

STAFF REPORT
CITY OF HOLLY HILL, FLORIDA

City Commission
Resolution

MEETING DATE: **September 26, 2023**
FROM: **Michele Moore**
SUBJECT: **A Resolution of the City Commission of the City of Holly Hill, Volusia County, Florida, Amending the Water and Sewer Rate Schedule for the City of Holly Hill for the Fiscal Year 2023-2024; Providing for Severability; and Providing for an Effective Date.**
NUMBER: **2023-R-56**
APPLICANT:
PLANNER:

DISCUSSION:

On August 13, 2019, the City Commission reviewed the Utility rate study and adopted changes in the City of Holly Hill's Code of Ordinances Chapter 70 (Utilities). The new fee structure methodology in this code change is consistent with recommended industry practices. This code change provided for annual rate adjustments to utilities rates of 5.5% for 5 years.

This Resolution updates the utility fees based on the changes to the City of Holly Hill's Code of Ordinances, Chapter 70 (Utilities).

The current City-wide Fee Schedule which was adopted on August 23, 2022, with Resolution 2022-R-56 and became effective October 1, 2022 and includes all rates in one Resolution. Due to the continued implementation of the Tyler ERP system at this time the changes to the fee schedule are for Water and Sewer only. The remainder of the fee schedule will be reviewed and presented for Commission approval at a later date. The increases to water and sewer are consistent with the pre-approved 5.5% annual increase.

FISCAL ANALYSIS:

The proposed utility fee changes average 5.5% as recommended in the Utility rates study.

STAFF RECOMMENDATION:

Recommend approval of the Resolution as submitted by staff.

COMMISSION GOAL:

Goal #1: Develop and maintain a sound and sustainable financial plan for the city that establishes sufficient reserves for all funds, ensures (whenever possible) that user fees pay for services rendered, provides a realistic capital improvement program, and encourages

public/private sector partnerships and intergovernmental partnerships.

MOTION:

APPROVE THE RESOLUTION OF THE CITY COMMISSION OF THE CITY OF HOLLY HILL, VOLUSIA COUNTY, FLORIDA, AMENDING THE COMPREHENSIVE CITY-WIDE ADOPTED FEE SCHEDULE FOR THE CITY OF HOLLY HILL FOR THE FISCAL YEAR 2023-2024.

ATTACHMENTS:

- Utility Billing Rate Schedule Eff 10012023 (PDF)

Resolution No. 2023-56

A RESOLUTION OF THE CITY COMMISSION OF THE CITY OF HOLLY HILL, VOLUSIA COUNTY, FLORIDA, AMENDING THE WATER AND SEWER RATE SCHEDULE FOR THE CITY OF HOLLY HILL FOR THE FISCAL YEAR 2023-2024; PROVIDING FOR SEVERABILITY; AND PROVIDING FOR AN EFFECTIVE DATE.

A RESOLUTION OF THE CITY OF HOLLY HILL, FLORIDA INCREASING WATER AND SEWER RATES BY 5.5% FOR THE NEXT FISCAL YEAR; PROVIDING FOR SEVERABILITY; AND PROVIDING FOR AN EFFECTIVE DATE.

WHEREAS, the City Commission of the City of Holly Hill, Florida, has made the following determinations:

1. On August 13, 2019, the City Commission reviewed the Utility rate study and adopted changes to the City of Holly Hill's Code of Ordinances Chapter 70 (Utilities).

2. The Citywide Fee Schedule has been modified to incorporate 2022 changes in the City of Holly Hill's Code of Ordinances including Chapter 70 (Utilities) and various changes contained in the Land Development Code.

3. The Schedule of Fees (which is attached hereto and incorporated herein as "Attachment "A") is being modified to reflect the changes that have been incorporated herein.

NOW THEREFORE, BE IT RESOLVED BY THE CITY COMMISSION OF THE CITY OF HOLLY HILL, FLORIDA:

SECTION 1. Notice of the public meeting and public hearing at which this Resolution was considered was properly given, and all oral and written presentations made to and heard by the City Commission were properly considered.

SECTION 2. There is a reasonable relationship between the fees to be collected for the provision of various City services and the City's costs in providing those services.

SECTION 3. The fees which are increased, as set forth in the FY 2023-2024 Proposed Water and Sewer Fee Schedule (Attachment "A"):

1. Do not exceed the actual or estimated reasonable costs to the City of providing the services to which the fees relate;

2. Are reasonable and necessary to enable the City to provide the benefit or privilege, service or product, license or permit, use or rental, fine or penalty, or property development to which they relate;

3. Have been allocated in a manner such that the costs to a payor bear a fair and reasonable relationship to the payor's burden on, or benefits received, from the City; and

SECTION 4. The City Commission hereby approves and adopts:

1. The FY 2023-2024 Proposed Water and Sewer Fee Schedule (Attachment "A").

SECTION 5. Any fee, rate, charge, penalty, fine, table, or schedule contained in the FY 2023-2024 Proposed City-wide Fee Schedule (Attachment "A"), as adopted in this Resolution, will prevail and apply in the event of a conflict with any other fee, rate, charge, penalty, fine, table, or schedule.

SECTION 6. The newly created fees, unchanged fees, decreased fees and increased fees listed in this Resolution and set forth in the FY 2023-2024 Proposed Water and Sewer Fee Schedule (Attachment "A") become effective on October 1, 2023.

APPROVED AND AUTHENTICATED on this 26th day of SEPTEMBER 2023.

Exhibit A

Utilites Department Water/Sewer Rates- Effective October 1, 2023

FEE TYPE	FY2021-2022	FY2022-2023	FY2023-2024	Increase over prior year	Discussion Notes
UTILITIES					
UTILITY DEPOSIT RATES					
RESIDENTIAL UTILITY DEPOSITS ARE BASED ON CREDIT SCORE AS VERIFIED BY APPROVED PROVIDER:					
GREEN					
WATER	50.00	50.00	50.00		
SEWER	50.00	50.00	50.00		
SOLID WASTE	50.00	50.00	50.00		
YELLOW					
WATER	75.00	75.00	75.00		
SEWER	75.00	75.00	75.00		
SOLID WASTE	75.00	75.00	75.00		
RED					
WATER	100.00	100.00	100.00		
SEWER	100.00	100.00	100.00		
SOLID WASTE	100.00	100.00	100.00		
DEFINITIONS OF GREEN, YELLOW, AND RED ARE LISTED BELOW:					
GREEN LIGHT - MINIMAL DEPOSIT REQUIRED. BASED ON THE INFORMATION PROVIDED, THE APPLICANT HAS A GOOD CREDIT SCORE AND POSES A LOW CREDIT RISK.					
YELLOW LIGHT - DEPOSIT REQUIRED. BASED ON THE INFORMATION PROVIDED, THE APPLICANT HAS AN AVERAGE CREDIT SCORE AND POSES A MODERATE CREDIT RISK.					
RED LIGHT - MAXIMUM DEPOSIT REQUIRED. BASED ON THE INFORMATION PROVIDED, THE APPLICANT HAS A POOR CREDIT SCORE OR EXCHANGE HITS AND POSES A HIGH CREDIT RISK, **OR IF THEY REFUSE CREDIT CHECK.**					
DEPOSIT OF $150 REQUIRED FOR PROPERTY MANAGEMENT COMPANIES OR LANDLORDS IN LIEU OF FULL DEPOSIT TO RECEIVE SERVICES WHILE PREPARING PROPERTY FOR NEW TENANTS.					
NON-RESIDENTIAL UTILITY DEPOSITS ARE BASED ON AN AMOUNT EQUAL TO TWICE THE					
ADDITIONAL DEPOSITS					
IN THE EVENT THE UTILITY SERVICE IS DISCONNECTED 2 OR MORE TIMES FOR NON-PAYMENT OR HAS					
WATER/SEWER UTILITY RATES					
WATER					
WATER FIXED MONTHLY CHARGES					
INSIDE CITY:					Increase in Water/Sewer
WATER RESIDENTAL 3/4" METER-MONTHLY	9.32	9.83	10.37	0.54	5.50%
WATER RESIDENTAL 1" METER-MONTHLY	9.32	9.83	10.37	0.54	
WATER RESIDENTAL 1 1/2" METER-MONTHLY	31.05	32.76	34.56	1.80	
WATER RESIDENTAL 2" METER-MONTHLY	49.69	52.42	55.30	2.88	
WATER RESIDENTAL 3" METER-MONTHLY	135.10	142.53	150.37	7.84	
WATER RESIDENTAL 4" METER-MONTHLY	232.92	245.73	259.25	13.52	
WATER RESIDENTAL 6" METER-MONTHLY	496.90	524.23	553.06	28.83	
WATER RESIDENTAL 8" METER-MONTHLY	869.57	917.40	967.86	50.46	
WATER RESIDENTAL 10" METER-MONTHLY	1,304.37	1,376.11	1,451.79	75.69	
WATER RESIDENTAL MULTI UNIT (PER UNIT-MONTHLY)	8.81	9.29	9.80	0.51	
WATER NON-RESIDENTAL 3/4" METER-MONTHLY	9.32	9.83	10.37	0.54	
WATER NON-RESIDENTAL 1" METER-MONTHLY	15.53	16.38	17.28	0.90	
WATER NON-RESIDENTAL 1 1/2" METER-MONTHLY	31.05	32.76	34.56	1.80	
WATER NON-RESIDENTAL 2" METER-MONTHLY	49.69	52.42	55.30	2.88	
WATER NON-RESIDENTAL 3" METER-MONTHLY	135.10	142.53	150.37	7.84	

Attachment: Utility Billing Rate Schedule Eff 10012023 (2023-R-56 : Fiscal Year 2024 Water & Sewer Rate Schedule)

Exhibit A

Utilites Department Water/Sewer Rates- Effective October 1, 2023

FEE TYPE	FY2021-2022	FY2022-2023	FY2023-2024	Increase over prior year	Discussion Notes
UTILITIES					
WATER NON-RESIDENTAL 4" METER-MONTHLY	232.92	245.73	259.25	13.52	
WATER NON-RESIDENTAL 6" METER-MONTHLY	496.90	524.23	553.06	28.83	
WATER NON-RESIDENTAL 8" METER-MONTHLY	869.57	917.40	967.86	50.46	
WATER NON-RESIDENTAL 10" METER-MONTHLY	1,304.37	1,376.11	1,451.79	75.69	
WATER NON-RESIDENTAL MULTI UNIT (PER UNIT-MONTHLY)	8.81	9.29	9.80	0.51	
OUTSIDE CITY:		-	-	-	
WATER RESIDENTAL 3/4" METER-MONTHLY	11.65	12.29	12.96	0.68	
WATER RESIDENTAL 1" METER-MONTHLY	11.65	12.29	12.96	0.68	
WATER RESIDENTAL 1 1/2" METER-MONTHLY	38.82	40.95	43.20	2.25	
WATER RESIDENTAL 2" METER-MONTHLY	62.11	65.52	69.13	3.60	
WATER RESIDENTAL 3" METER-MONTHLY	168.87	178.16	187.96	9.80	
WATER RESIDENTAL 4" METER-MONTHLY	291.15	307.17	324.06	16.89	
WATER RESIDENTAL 6" METER-MONTHLY	621.12	655.29	691.33	36.04	
WATER RESIDENTAL 8" METER-MONTHLY	1,086.97	1,146.75	1,209.82	63.07	
WATER RESIDENTAL 10" METER-MONTHLY	1,630.46	1,720.13	1,814.74	94.61	
WATER RESIDENTAL MULTI UNIT (PER UNIT-MONTHLY)	11.01	11.62	12.26	0.64	
		-	-	-	
WATER NON-RESIDENTAL 3/4" METER-MONTHLY	11.65	12.29	12.96	0.68	
WATER NON-RESIDENTAL 1" METER-MONTHLY	19.41	20.48	21.60	1.13	
WATER NON-RESIDENTAL 1 1/2" METER-MONTHLY	38.82	40.95	43.20	2.25	
WATER NON-RESIDENTAL 2" METER-MONTHLY	62.11	65.52	69.13	3.60	
WATER NON-RESIDENTAL 3" METER-MONTHLY	168.87	178.16	187.96	9.80	
WATER NON-RESIDENTAL 4" METER-MONTHLY	291.15	307.17	324.06	16.89	
WATER NON-RESIDENTAL 6" METER-MONTHLY	621.12	655.29	691.33	36.04	
WATER NON-RESIDENTAL 8" METER-MONTHLY	1,086.97	1,146.75	1,209.82	63.07	
WATER NON-RESIDENTAL 10" METER-MONTHLY	1,630.46	1,720.13	1,814.74	94.61	
WATER NON-RESIDENTAL MULTI UNIT (PER UNIT-MONTHLY)	11.01	11.62	12.26	0.64	
WATER VOLUMETRIC RATES (ALL RATES SHOWN ARE FEE PER 1,000 GALLONS)					
WATER INSIDE CITY:		-	-	-	
WATER RESIDENTAL 0 TO 2,000 GALLONS	4.43	4.67	4.93	0.26	
WATER RESIDENTAL 2,001 TO 5,000 GALLONS	8.85	9.34	9.85	0.51	
WATER RESIDENTAL 5,001 TO 10,000 GALLONS	10.18	10.74	11.34	0.59	
WATER RESIDENTAL 10,001 TO 15,000 GALLONS	11.06	11.67	12.31	0.64	
WATER RESIDENTAL OVER 15,000 GALLONS	11.95	12.61	13.30	0.69	
		-	-	-	
WATER MULTI UNIT RESIDENTAL 0 TO 2,000 GALLONS	4.43	4.67	4.93	0.26	
WATER MULTI UNIT RESIDENTAL 2,001 TO 5,000 GALLONS	8.85	9.34	9.85	0.51	
WATER MULTI UNIT RESIDENTAL 5,001 TO 10,000 GALLONS	10.18	10.74	11.34	0.59	
WATER MULTI UNIT RESIDENTAL 10,001 TO 15,000 GALLONS	11.06	11.67	12.31	0.64	
WATER MULTI UNIT RESIDENTAL OVER 15,000 GALLONS	11.95	12.61	13.30	0.69	
		-	-	-	
WATER NON-RESIDENTAL 0 TO 2,000 GALLONS	8.85	9.34	9.85	0.51	
WATER NON-RESIDENTAL 2,001 TO 5,000 GALLONS	8.85	9.34	9.85	0.51	
WATER NON-RESIDENTAL 5,001 TO 10,000 GALLONS	10.18	10.74	11.34	0.59	
WATER NON-RESIDENTAL 10,001 TO 15,000 GALLONS	10.18	10.74	11.34	0.59	
WATER NON-RESIDENTAL OVER 15,000 GALLONS	10.18	10.74	11.34	0.59	
WATER MULTI UNIT NON-RESIDENTAL 0 TO 2,000 GALLONS	4.43	4.67	4.93	0.26	
WATER MULTI UNIT NON-RESIDENTAL 2,001 TO 5,000 GALLONS	8.85	9.34	9.85	0.51	
WATER MULTI UNIT NON-RESIDENTAL 5,001 TO 10,000 GALLONS	10.18	10.74	11.34	0.59	
WATER MULTI UNIT NON-RESIDENTAL 10,001 TO 15,000 GALLONS	11.06	11.67	12.31	0.64	
WATER MULTI UNIT NON-RESIDENTAL OVER 15,000 GALLONS	11.95	12.61	13.30	0.69	
		-	-	-	
WATER OUTSIDE CITY:		-	-	-	
WATER RESIDENTAL 0 TO 2,000 GALLONS	5.54	5.84	6.16	0.32	
WATER RESIDENTAL 2,001 TO 5,000 GALLONS	11.06	11.67	12.31	0.64	
WATER RESIDENTAL 5,001 TO 10,000 GALLONS	12.73	13.43	14.17	0.74	
WATER RESIDENTAL 10,001 TO 15,000 GALLONS	13.83	14.59	15.39	0.80	
WATER RESIDENTAL OVER 15,000 GALLONS	14.94	15.76	16.63	0.87	

Attachment: Utility Billing Rate Schedule Eff 10012023 (2023-R-56 : Fiscal Year 2024 Water & Sewer Rate Schedule)

Exhibit A

Utilites Department Water/Sewer Rates- Effective October 1, 2023

FEE TYPE	FY2021-2022	FY2022-2023	FY2023-2024	Increase over prior year	Discussion Notes
UTILITIES					
		-	-	-	
WATER MULTI UNIT RESIDENTAL 0 TO 2,000 GALLONS	5.54	5.84	6.16	0.32	
WATER MULTI UNIT RESIDENTAL 2,001 TO 5,000 GALLONS	11.06	11.67	12.31	0.64	
WATER MULTI UNIT RESIDENTAL 5,001 TO 10,000 GALLONS	12.73	13.43	14.17	0.74	
WATER MULTI UNIT RESIDENTAL 10,001 TO 15,000 GALLONS	13.83	14.59	15.39	0.80	
WATER MULTI UNIT RESIDENTAL OVER 15,000 GALLONS	14.94	15.76	16.63	0.87	
		-	-	-	
WATER NON-RESIDENTAL 0 TO 2,000 GALLONS	11.06	11.67	12.31	0.64	
WATER NON-RESIDENTAL 2,001 TO 5,000 GALLONS	11.06	11.67	12.31	0.64	
WATER NON-RESIDENTAL 5,001 TO 10,000 GALLONS	12.73	13.43	14.17	0.74	
WATER NON-RESIDENTAL 10,001 TO 15,000 GALLONS	12.73	13.43	14.17	0.74	
WATER NON-RESIDENTAL OVER 15,000 GALLONS	12.73	13.43	14.17	0.74	
		-	-	-	
WATER OUTSIDE MULTI UNIT CITY NON-RESIDENTAL 0 TO 2,000 GALLONS	5.54	5.84	6.16	0.32	
WATER OUTSIDE MULTI UNIT CITY NON-RESIDENTAL 2,001 TO 5,000 GALLONS	11.06	11.67	12.31	0.64	
WATER OUTSIDE MULTI UNIT CITY NON-RESIDENTAL 5,001 TO 10,000 GALLONS	12.73	13.43	14.17	0.74	
WATER OUTSIDE MULTI UNIT CITY NON-RESIDENTAL 10,001 TO 15,000 GALLONS	13.83	14.59	15.39	0.80	
WATER OUTSIDE MULTI UNIT CITY NON-RESIDENTAL OVER 15,000 GALLONS	14.94	15.76	16.63	0.87	
SEWER					
SEWER FIXED MONTHLY CHARGES					
SEWER INSIDE CITY:					
SEWER RESIDENTAL 3/4" METER-MONTHLY	13.37	14.10	14.88	0.78	
SEWER RESIDENTAL 1" METER-MONTHLY	13.37	14.10	14.88	0.78	
SEWER RESIDENTAL 1 1/2" METER-MONTHLY	44.55	47.00	49.59	2.59	
SEWER RESIDENTAL 2" METER-MONTHLY	71.29	75.21	79.35	4.14	
SEWER RESIDENTAL 3" METER-MONTHLY	193.81	204.47	215.72	11.25	
SEWER RESIDENTAL 4" METER-MONTHLY	334.15	352.53	371.92	19.39	
SEWER RESIDENTAL 6" METER-MONTHLY	712.87	752.08	793.44	41.36	
SEWER RESIDENTAL 8" METER-MONTHLY	1,247.52	1,316.14	1,388.52	72.39	
SEWER RESIDENTAL 10" METER-MONTHLY	1,871.28	1,974.21	2,082.79	108.58	
SEWER RESIDENTAL MULTI UNIT (PER UNIT-MONTHLY)	12.63	13.32	14.06	0.73	
			-	-	
SEWER NON-RESIDENTAL 3/4" METER-MONTHLY	13.37	14.10	14.88	0.78	
SEWER NON-RESIDENTAL 1" METER-MONTHLY	22.27	23.50	24.79	1.29	
SEWER NON-RESIDENTAL 1 1/2" METER-MONTHLY	44.55	47.00	49.59	2.59	
SEWER NON-RESIDENTAL 2" METER-MONTHLY	71.29	75.21	79.35	4.14	
SEWER NON-RESIDENTAL 3" METER-MONTHLY	193.81	204.47	215.72	11.25	
SEWER NON-RESIDENTAL 4" METER-MONTHLY	334.15	352.53	371.92	19.39	
SEWER NON-RESIDENTAL 6" METER-MONTHLY	712.87	752.08	793.44	41.36	
SEWER NON-RESIDENTAL 8" METER-MONTHLY	1,247.52	1,316.14	1,388.52	72.39	
SEWER NON-RESIDENTAL 10" METER-MONTHLY	1,871.28	1,974.21	2,082.79	108.58	
SEWER NON-RESIDENTAL MULTI UNIT-MONTHLY (PER UNIT-MONTHLY)	12.63	13.32	14.06	0.73	
			-	-	
SEWER OUTSIDE CITY:			-	-	
SEWER RESIDENTAL 3/4" METER-MONTHLY	16.71	17.63	18.60	0.97	
SEWER RESIDENTAL 1" METER-MONTHLY	16.71	17.63	18.60	0.97	
SEWER RESIDENTAL 1 1/2" METER-MONTHLY	55.69	58.76	61.99	3.23	
SEWER RESIDENTAL 2" METER-MONTHLY	89.11	94.01	99.18	5.17	
SEWER RESIDENTAL 3" METER-MONTHLY	242.26	255.59	269.65	14.06	
SEWER RESIDENTAL 4" METER-MONTHLY	417.69	440.66	464.90	24.24	
SEWER RESIDENTAL 6" METER-MONTHLY	891.09	940.10	991.80	51.71	
SEWER RESIDENTAL 8" METER-MONTHLY	1,559.40	1,645.17	1,735.66	90.48	
SEWER RESIDENTAL 10" METER-MONTHLY	2,339.11	2,467.76	2,603.48	135.73	
SEWER RESIDENTAL MULTI UNIT-MONTHLY (PER UNIT MONTHLY)	15.79	16.66	17.58	0.92	
			-	-	
SEWER NON-RESIDENTAL 3/4" METER-MONTHLY	16.71	17.63	18.60	0.97	
SEWER NON-RESIDENTAL 1" METER-MONTHLY	27.84	29.37	30.99	1.62	

Attachment: Utility Billing Rate Schedule Eff 10012023 (2023-R-56 : Fiscal Year 2024 Water & Sewer Rate Schedule)

Exhibit A

Utilites Department Water/Sewer Rates- Effective October 1, 2023

FEE TYPE	FY2021-2022	FY2022-2023	FY2023-2024	Increase over prior year	Discussion Notes
UTILITIES					
SEWER NON-RESIDENTAL 1 1/2" METER-MONTHLY	55.69	58.76	61.99	3.23	
SEWER NON-RESIDENTAL 2" METER-MONTHLY	89.11	94.01	99.18	5.17	
SEWER NON-RESIDENTAL 3" METER-MONTHLY	242.26	255.59	269.65	14.06	
SEWER NON-RESIDENTAL 4" METER-MONTHLY	417.69	440.66	464.90	24.24	
SEWER NON-RESIDENTAL 6" METER-MONTHLY	891.09	940.10	991.80	51.71	
SEWER NON-RESIDENTAL 8" METER-MONTHLY	1,559.40	1,645.17	1,735.66	90.48	
SEWER NON-RESIDENTAL 10" METER-MONTHLY	2,339.11	2,467.76	2,603.48	135.73	
SEWER NON-RESIDENTAL MULTI UNIT-MONTHLY (PER UNIT MONTHLY)	15.79	16.66	17.58	0.92	
			-	-	
SEWER VOLUMETRIC RATES (ALL RATES SHOWN ARE FEE PER 1,000 GALLONS)			-	-	
			-	-	
SEWER INSIDE CITY:			-	-	
SEWER RESIDENTAL 0 TO 2,000 GALLONS	3.44	3.63	3.83	0.20	
SEWER RESIDENTAL OVER 2,000	10.41	10.98	11.58	0.60	
SEWER RESIDENTAL MULTI UNIT 0 TO 2,000 GALLONS	3.44	3.63	3.83	0.20	
SEWER RESIDENTAL MULTI UNIT OVER 2,000	10.41	10.98	11.58	0.60	
			-	-	
SEWER NON-RESIDENTAL 0 TO 2,000 GALLONS	10.41	10.98	11.58	0.60	
SEWER NON-RESIDENTAL OVER 2,000	10.41	10.98	11.58	0.60	
SEWER NON-RESIDENTAL MULTI UNIT 0 TO 2,000 GALLONS	3.44	3.63	3.83	0.20	
SEWER NON-RESIDENTAL MULTI UNIT OVER 2,000 GALLONS	10.41	10.98	11.58	0.60	
			-	-	
SEWER RESIDENTAL 0 TO 2,000 GALLONS	4.30	4.54	4.78	0.25	
SEWER RESIDENTAL OVER 2,000	13.01	13.72	14.48	0.75	
SEWER RESIDENTAL MULTI UNIT 0 TO 2,000 GALLONS	4.30	4.54	4.78	0.25	
SEWER RESIDENTAL MULTI UNIT OVER 2,000	13.01	13.72	14.48	0.75	
			-	-	
SEWER NON-RESIDENTAL 0 TO 2,000 GALLONS	13.01	13.72	14.48	0.75	
SEWER NON-RESIDENTAL OVER 2,000	13.01	13.72	14.48	0.75	
SEWER NON-RESIDENTAL MULTI UNIT 0 TO 2,000 GALLONS	4.30	4.54	4.78	0.25	
SEWER NON-RESIDENTAL MULTI UNIT OVER 2,000 GALLONS	13.01	13.72	14.48	0.75	
			-	-	
SEWER OUTSIDE CITY NON-RESIDENTAL OVER 2,000	13.01	13.72	14.48	0.75	
SEWER OUTSIDE CITY NON-RESIDENTAL MULTI UNIT 0 TO 2,000 GALLONS	4.30	4.54	4.78	0.25	
SEWER OUTSIDE CITY NON-RESIDENTAL MULTI UNIT OVER 2,000 GALLONS	13.01	13.72	14.48	0.75	
			-	-	
FIRE LINE SPRINKLERS			-	-	
1" FIRE LINE SPRNKLER - INSIDE CITY	2.31	2.44	2.57	0.13	
2" FIRE LINE SPRNKLER - INSIDE CITY	4.58	4.83	5.10	0.27	
4" FIRE LINE SPRNKLER - INSIDE CITY	9.16	9.66	10.19	0.53	
6" FIRE LINE SPRNKLER - INSIDE CITY	18.30	19.31	20.37	1.06	
8" FIRE LINE SPRNKLER - INSIDE CITY	36.64	38.66	40.78	2.13	
10" FIRE LINE SPRNKLER - INSIDE CITY	73.24	77.27	81.52	4.25	
12" FIRE LINE SPRNKLER - INSIDE CITY	146.47	154.52	163.02	8.50	
			-	-	
1" FIRE LINE SPRNKLER - OUTSIDE CITY	2.87	3.03	3.19	0.17	
2" FIRE LINE SPRNKLER - OUTSIDE CITY	5.73	6.04	6.38	0.33	
4" FIRE LINE SPRNKLER - OUTSIDE CITY	11.48	12.11	12.78	0.67	
6" FIRE LINE SPRNKLER - OUTSIDE CITY	22.89	24.15	25.48	1.33	
8" FIRE LINE SPRNKLER - OUTSIDE CITY	45.78	48.29	50.95	2.66	
RENEWAL/REPLACEMENT					
RENEW/REPLACE SEWER - INSIDE CITY	3.00	3.00	3.00	3.00	
RENEW/REPLACE WATER - INSIDE CITY	3.00	3.00	3.00	3.00	
RENEW/REPLACE SEWER - OUTSIDE CITY	3.75	3.75	3.75	3.75	
RENEW/REPLACE WATER - OUTSIDE CITY	3.75	3.75	3.75	3.75	
MISC./REPLACEMENT FEES					
ACCOUNT FEES:					
ADMINISTRATIVE FEES	25.00	25.00	25.00	25.00	
COLLECTIONS ADMINISTRATIVE FEE	35.00	35.00	35.00	35.00	

Attachment: Utility Billing Rate Schedule Eff 10012023 (2023-R-56 : Fiscal Year 2024 Water & Sewer Rate Schedule)

Exhibit A

Utilites Department Water/Sewer Rates- Effective October 1, 2023

FEE TYPE	FY2021-2022	FY2022-2023	FY2023-2024	Increase over prior year	Discussion Notes
UTILITIES					
DELINQUENT ACCOUNT FEE	30.00	30.00	30.00	30.00	
LATE PAYMENT PENALTY (APPLIES TO ALL WATER, SEWER, TRASH, RENEWAL & REPLACEMENT CHARGES AND UTILITY TAXES)	15%	15%	15%	0.15	
COLLECTION AGENCY PERCENTAGE	35%	35%	35%	0.35	
RETURNED CHECK CHARGE - CHECKS UP TO $50.00	25.00	25.00	25.00	25.00	
RETURNED CHECK CHARGE - CHECKS $50.01 - $300.00	30.00	30.00	30.00	30.00	
RETURNED CHECK CHARGE - CHECKS $300.01 - $800.00	40.00	40.00	40.00	40.00	
RETURNED CHECK CHARGE - CHECKS > $800.00	5% of Face Amt.	5% of Face Amt.	5% of Face Amt.		
SUSPENDED ACCOUNT FEE	15.00	15.00	15.00	15.00	
SUSPENDED ACCOUNT FEE - REACTIVATION	15.00	15.00	15.00	15.00	
SUSPENDED ACCOUNT FEE - AFTER HOURS AND WEEKEND/HOLIDAYS	100.00	100.00	100.00	100.00	
OTHER MISC/REPLACEMENT FEES:					
-		-	-		
TEMPORARY TURN-ON	25.00	25.00	25.00	25.00	
BRASS BODY WATER METER	Actual Cost+Labor	Actual Cost+Labor	Actual Cost+Labor		
BROKEN HARD LOCK	35.00	35.00	35.00	35.00	
BROKEN SOFT LOCK	30.00	30.00	30.00	30.00	
BROKEN MASTER LOCK	45.00	45.00	45.00	45.00	
METER BENCH TEST	75.00	75.00	75.00	75.00	
BROKEN VALVE	Actual Cost+Labor	Actual Cost+Labor	Actual Cost+Labor		
METER COUPLING 3/4"	Actual Cost+Labor	Actual Cost+Labor	Actual Cost+Labor		
BALL VALVE 1"	Actual Cost+Labor	Actual Cost+Labor	Actual Cost+Labor		
BALL VALVE 3/4"	Actual Cost+Labor	Actual Cost+Labor	Actual Cost+Labor		
LABOR CHARGE PER HOUR	N\A	N\A	N\A		
METER BOX	Actual Cost+Labor	Actual Cost+Labor	Actual Cost+Labor		
ADDITIONAL METER CHECK AT LOCATION	20.00	20.00	20.00	20.00	
OVERTIME CHARGE	52.00	52.00	52.00	52.00	
PULLED/SET METER	abor Cost/1 Hr. Mi	Labor Cost/1 Hr. Min.	Labor Cost/1 Hr. Min.		
RADIO READ HEAD	Actual Cost+Labor	Actual Cost+Labor	Actual Cost+Labor		
METER COUPLING 1"	Actual Cost+Labor	Actual Cost+Labor	Actual Cost+Labor		
METER RISER 7"	Actual Cost+Labor	Actual Cost+Labor	Actual Cost+Labor		
METER RISER 9"	Actual Cost+Labor	Actual Cost+Labor	Actual Cost+Labor		
REUSE WATER	ost as per contrac all locations	Cost as per contract all locations	Cost as per contract all locations		
BOOT DAMAGED, STOLEN	26.00	26.00	26.00	26.00	
HYDRANT RENTAL -					
METER DEPOSIT	1,700.00	1,700.00	1,700.00	1,700.00	
MONTHLY USAGE RATES: (ALL RATES SHOWN ARE FEE PER 1,000 GALLONS)					
WTR 0-2,000 GALLONS	8.85	9.34	9.85	0.51	
WTR 2,001-5,000 GALLONS	8.85	9.34	9.85	0.51	
WTR 5,001-10,000 GALLONS	10.18	10.74	11.34	0.59	
WTR 10,001-15,000 GALLONS	10.18	10.74	11.34	0.59	
WTR > 15,000 GALLONS	10.18	10.74	11.34	0.59	
LOST METER (ASSUMED GALLONS PER DAY)	500GL/DAY	500GL/DAY	500GL/DAY		

Attachment: Utility Billing Rate Schedule Eff 10012023 (2023-R-56 : Fiscal Year 2024 Water & Sewer Rate Schedule)

HOLLY HILL
FLORIDA

STAFF REPORT
CITY OF HOLLY HILL, FLORIDA

City Commission
Resolution

MEETING DATE: **September 26, 2023**
FROM: **Joseph Forte**
SUBJECT: **A Resolution of the City Commission of the City of Holly Hill, Volusia County, Florida, in Opposition to the Proposed Construction of the Belvedere Fuel Farm Near Ormond Beach in the Unincorporated Area of Volusia County At, or About 874 Hull Road, Ormond Beach, Florida.**
NUMBER: **2023-R-57**
APPLICANT:
PLANNER:

DISCUSSION:

The Belvedere Fuel Farm proposal for unincorporated Ormond Beach is expected to tender a tremendous negative impact on the quality of life for the residents of that area. Among the many concerns are the major traffic impacts, environmental concerns, and the extreme industrial use in proximity to several subdivisions, a large recreation complex and a nearby airport. Therefore, the Volusia League of Cities is asking all of its members to pass a resolution to support Ormond Beach in its opposition to this project.

FISCAL ANALYSIS:

None

STAFF RECOMMENDATION:

To approve the resolution opposing the proposed construction of the Belvedere Fuel Farm near Ormond Beach.

COMMISSION GOAL:

Goal #4: Provide proficient public health and safety services in terms of police and fire protection, water, storm water, waste water and solid waste management and disaster preparedness with a focus on intergovernmental collaboration, private sector partnerships, and utilization of technologies and proven innovations.

MOTION:

TO APPROVE THE RESOLUTION OPPOSING THE PROPOSED CONSTRUCTION OF THE BELVEDERE FUEL FARM NEAR ORMOND BEACH.

ATTACHMENTS:

- Ormond Beach Letter to the FDEP RE-Belvedere Fuel Farm (DOCX)

Resolution No. 2023-57

A RESOLUTION OF THE CITY COMMISSION OF THE CITY OF HOLLY HILL, VOLUSIA COUNTY, FLORIDA, IN OPPOSITION TO THE PROPOSED CONSTRUCTION OF THE BELVEDERE FUEL FARM NEAR ORMOND BEACH IN THE UNINCORPORATED AREA OF VOLUSIA COUNTY AT, OR ABOUT 874 HULL ROAD, ORMOND BEACH, FLORIDA.

A RESOLUTION OF THE CITY COMMISSION OF THE CITY OF HOLLY HILL, VOLUSIA COUNTY, FLORIDA, IN OPPOSITION TO THE PROPOSED CONSTRUCTION OF THE BELVEDERE FUEL FARM NEAR ORMOND BEACH IN THE UNINCORPORATED AREA OF VOLUSIA COUNTY AT, OR ABOUT 874 HULL ROAD, ORMOND BEACH, FLORIDA.

WHEREAS, the proposed Belvedere fuel farm would consist of 16 tanks, some 40 feet tall, that will store more than 20 million gallons of gasoline, diesel, ethanol, biodiesel, additives, and propane and will feed a continuous stream of tanker trucks (approximately 164 trucks per day); and

WHEREAS, this is an extreme use of commercial zoning which has proximity to the residential neighborhoods of Bear Creek Retirement Community, Ormond Lakes, Ormond Grande Townhomes, Village of Pine Run as-well-as the Ormond Beach Sports Complex with its 29 sports fields. The presence of such a high-use terminal in proximity to residential and recreational facilities with its traffic and noise generated 24-hours a day would negatively impact the quality of life of many tax-paying residents; and

WHEREAS, there are potential safety issues that would exist with the proximity of Ormond Beach Municipal Airport and airport runway, which averages 119,000 operations (takeoffs or landings) per year. Operations include providing flight instruction to student pilots. The risk of potential collisions and catastrophic effects are a major concern; and

WHEREAS, there are numerous environmental concerns which would be created. Air quality is impacted by the release of harmful chemicals during fuel storage, transfer, and loading operations. These chemicals can cause a variety of health problems including eye, nose, and throat irritation; headaches and loss of coordination; damage to the liver, kidneys, or central nervous system. Fuel farm emissions, such as benzene, are known to cause cancer. There is also the risk of spills and leaks, which can release large amounts of pollutants into the environment. Spilled fuels can contaminate soil, groundwater, and surface water, posing risks to the aquifer and impacting our drinking water. Storage of flammable and combustible materials also adds additional risks.

NOW, THEREFORE, BE IT RESOLVED BY THE CITY COMMISSION OF THE CITY OF HOLLY HILL, FLORIDA supports the efforts of the Volusia League of Cities and its members to oppose the construction of the Belvedere Fuel Farm in unincorporated

Ormond Beach, and recommends the developer seek a more suitable location in a more remote location outside Volusia County.

APPROVED AND AUTHENTICATED on this 26th day of SEPTEMBER 2023.

Subject: Environmental Concerns and Document Request Regarding the Belvedere Fuel Farm Project In Ormond Beach

Dear Lu Burson at the Florida Department of Environmental Protection,

On behalf of the Ormond Beach Mayor, City Commission, and our concerned community members, I write to express our collective opposition to the proposed fuel farm project by Belvedere Terminals Company, LLC, located at 874 Hull Road. This location, while under the jurisdiction of Volusia County, adjoins the corporate boundaries of the City of Ormond Beach.

The recent Ormond Beach City Commission meeting on August 15th served as a sounding board for our community's deep concerns about this project. With over a hundred residents present, the predominant sentiment echoed was the potential environmental degradation this project might inflict on our region and the impacts on our quality of life and safety.

Given these environmental apprehensions, we earnestly request the Florida Department of Environmental Protection to provide all digital, audio, and other types of records pertaining to this project. Should there be any associated costs for obtaining these files, please notify us. Gaining a comprehensive understanding from your records will enable our community to address this project's potential environmental implications more effectively.

A core concern centers on the proposed facility's proximity to critical ecological zones. Nearby watersheds like the Tomoka River and sections east of US1 are designated as aquatic preserves. The potential exposure to harmful chemicals from the fuel farm could have profound long-term effects on these water bodies, endangering their flora, fauna, and overall health. Moreover, our community values the irreplaceable ecosystems of our local wildlife and the wetlands they inhabit. These ecosystems play a pivotal role in maintaining regional environmental equilibrium. Introducing such a facility could disrupt habitats, endangering numerous species, and degrade the integrity of our wetlands, which function as natural purifiers for our environment and crucial agents for groundwater recharge.

The anticipated increase in traffic, primarily trucks carrying potential pollutants, exacerbates our concerns. Roads like Harmony and Hull, which our residents frequently use to reach the Ormond Beach Sports Complex, would be at heightened risk of accidental spills and associated environmental harm. Our City is also the host to Bike Week and Biketober events that bring thousands to our city, escalating the likelihood of such spills and threats of fire from traffic incidents.

Furthermore, with Ormond Beach's transformation over the years from an industrial zone to a thriving area bustling with residential neighborhoods, recreational hubs, and local businesses, introducing such a heavy industrial project feels incongruous. Such a venture threatens the delicate environmental balance our community has diligently nurtured and preserved.

Attachment: Ormond Beach Letter to the FDEP RE-Belvedere Fuel Farm (2023-R-57 : Oppose Proposed Fuel Farm in Ormond Beach)

Our plea aligns with the overarching goals of environmental conservation and sustainable development upheld by the Florida Department of Environmental Protection. We trust in your commitment to ensuring that any development, particularly of this magnitude, harmonizes with its environmental context and meets the highest standards of ecological integrity.

We deeply appreciate your attention to this pressing matter and await your response.

With collective resolve,

The Ormond Beach City Commission

Attachment: Ormond Beach Letter to the FDEP RE-Belvedere Fuel Farm (2023-R-57 : Oppose Proposed Fuel Farm in Ormond Beach)

STAFF REPORT
CITY OF HOLLY HILL, FLORIDA

City Commission
Agenda Item

MEETING DATE: **September 26, 2023**
FROM: **Michele Moore**
SUBJECT: **Uncollectible Utility Account Adjustments**
NUMBER: **(ID # 4258)**
APPLICANT:
PLANNER:

DISCUSSION:

Finance staff is requesting the City Commission approve to adjust the accumulated Utilities uncollectible balances for all inactivated with terminated utility services over four years old as of August 31, 2023. Florida Statute 95.11 limits the amount of time for action to recovering utility debt. None of the accounts are under the current property owner's name. Both, internal and external collection efforts have been made on these accounts. If the account holder attempts to open future utility accounts the City will require payment of these debts.

FISCAL ANALYSIS:

The entry is to adjust utility accounts receivable to properly reflect the matching of revenues and expenditures. Utility accounts will be adjusted in the amount of $25,569.00.

STAFF RECOMMENDATION:

Authorize the Finance Director to adjust the accumulated utilities uncollectible accounts.

COMMISSION GOAL:

Goal #1: Develop and maintain a sound and sustainable financial plan for the city that establishes sufficient reserves for all funds, ensures (whenever possible) that user fees pay for services rendered, provides a realistic capital improvement program, and encourages public/private sector partnerships and intergovernmental partnerships.

MOTION:

AUTHORIZE THE FINANCE DEPARTMENT TO MAKE AN ADJUSTING ENTRY FOR UNCOLLECTIBLE ACCOUNTS IN THE AMOUNT OF $25,569.00.

- FY23 Uncollectible Account Adjustments (PDF)

Holly Hill, FL

Collection R[illegible]

Lien Det[illegible]

Packet: UBPKT01954 - MFM 09202023 UB AR ACCT WRITEOFFS

Type: Send For Lien - Write Off

Account #	Name	Site Address		** Current Acct. Balance	T Amo
01-00262-00	KRYSTAL	101 RIDGEWOOD AVE		5,980.63	5,98
DISBURSEMENT --	Liens From: 41 - REFUSE	To: 495-0000-117-1010 - ALLOW FOR UNCO...	1438.56		
	TX - TX	001-0000-117-1010 - ALLOW FOR UNCO...	227.10		
	57 - SEWER	400-0000-117-1010 - ALLOW FOR UNCO...	2034.73		
	1R - RENEW AND REPLACE WATER	407-0000-117-1010 - ALLOW FOR UNCO...	9.20		
	07 - WATER	400-0000-117-1010 - ALLOW FOR UNCO...	2261.84		
	3R - RENEW AND REPLACE SEWER	407-0000-117-1010 - ALLOW FOR UNCO...	9.20		
01-00318-05	RICHARD F ET WILLIS (VACANT)	241 RIDGEWOOD AVE		47.81	4
DISBURSEMENT --	Liens From: TX - TX	To: 001-0000-117-1010 - ALLOW FOR UNCO...	0.61		
	CA - COLLECTIONS ADMIN FEE	001-0000-117-1010 - ALLOW FOR UNCO...	35.00		
	1R - RENEW AND REPLACE WATER	407-0000-117-1010 - ALLOW FOR UNCO...	6.10		
	3R - RENEW AND REPLACE SEWER	407-0000-117-1010 - ALLOW FOR UNCO...	6.10		
01-01824-12	KACS ACQUISITIONS LLC (VCT)	124 HIGHLAND AVE		80.34	8
DISBURSEMENT --	Liens From: TX - TX	To: 001-0000-117-1010 - ALLOW FOR UNCO...	5.12		
	CA - COLLECTIONS ADMIN FEE	001-0000-117-1010 - ALLOW FOR UNCO...	35.00		
	1R - RENEW AND REPLACE WATER	407-0000-117-1010 - ALLOW FOR UNCO...	18.00		
	3R - RENEW AND REPLACE SEWER	407-0000-117-1010 - ALLOW FOR UNCO...	18.00		
	PN - PENALTY	400-0000-117-1010 - ALLOW FOR UNCO...	4.22		
01-04284-03	ANDREW R FAILOR	159 DAYTONA AVE		73.68	7
DISBURSEMENT --	Liens From: 57 - SEWER	To: 400-0000-117-1010 - ALLOW FOR UNCO...	15.67		
	CA - COLLECTIONS ADMIN FEE	001-0000-117-1010 - ALLOW FOR UNCO...	35.00		
	47 - REFUSE BULK	495-0000-117-1010 - ALLOW FOR UNCO...	23.01		
01-04304-09	THOMAS LANDRETH III	175 DAYTONA AVE		72.02	7
DISBURSEMENT --	Liens From: TX - TX	To: 001-0000-117-1010 - ALLOW FOR UNCO...	1.63		
	CA - COLLECTIONS ADMIN FEE	001-0000-117-1010 - ALLOW FOR UNCO...	35.00		
	1R - RENEW AND REPLACE WATER	407-0000-117-1010 - ALLOW FOR UNCO...	16.30		
	3R - RENEW AND REPLACE SEWER	407-0000-117-1010 - ALLOW FOR UNCO...	16.30		
	PN - PENALTY	400-0000-117-1010 - ALLOW FOR UNCO...	2.79		
01-04364-04	MARY LOU(VCT) EDWARDS	231 DAYTONA AVE		38.99	3
DISBURSEMENT --	Liens From: TX - TX	To: 001-0000-117-1010 - ALLOW FOR UNCO...	0.19		
	CA - COLLECTIONS ADMIN FEE	001-0000-117-1010 - ALLOW FOR UNCO...	35.00		
	1R - RENEW AND REPLACE WATER	407-0000-117-1010 - ALLOW FOR UNCO...	1.90		
	3R - RENEW AND REPLACE SEWER	407-0000-117-1010 - ALLOW FOR UNCO...	1.90		
01-06742-03	DOUGLAS(VACANT) PIHLKAR	332 BURLEIGH Ave # 1/2		89.69	8
DISBURSEMENT --	Liens From: TX - TX	To: 001-0000-117-1010 - ALLOW FOR UNCO...	2.31		
	CA - COLLECTIONS ADMIN FEE	001-0000-117-1010 - ALLOW FOR UNCO...	35.00		
	1R - RENEW AND REPLACE WATER	407-0000-117-1010 - ALLOW FOR UNCO...	23.10		
	3R - RENEW AND REPLACE SEWER	407-0000-117-1010 - ALLOW FOR UNCO...	23.10		
	PN - PENALTY	400-0000-117-1010 - ALLOW FOR UNCO...	6.18		
02-05618-04	TIAIRA YOUNG	941 HARTFORD AVE		85.11	8
DISBURSEMENT --	Liens From: 57 - SEWER	To: 400-0000-117-1010 - ALLOW FOR UNCO...	2.10		
	CA - COLLECTIONS ADMIN FEE	001-0000-117-1010 - ALLOW FOR UNCO...	35.00		
	CC - DELINQUENT ACCOUNT FEE	400-0000-117-1010 - ALLOW FOR UNCO...	25.00		
	47 - REFUSE BULK	495-0000-117-1010 - ALLOW FOR UNCO...	23.01		
03-00316-12	240 RIDGEWOOD REALTY LLC	240 RIDGEWOOD AVE		98.76	9
DISBURSEMENT --	Liens From: TX - TX	To: 001-0000-117-1010 - ALLOW FOR UNCO...	3.06		
	CA - COLLECTIONS ADMIN FEE	001-0000-117-1010 - ALLOW FOR UNCO...	35.00		
	02 - WATER INSIDE COMMER	400-0000-117-1010 - ALLOW FOR UNCO...	30.62		
	PN - PENALTY	400-0000-117-1010 - ALLOW FOR UNCO...	30.08		
03-00378-10	MAJESTICAL PROPERTIES LLC(VCT)	538 RIDGEWOOD AVE		24.72	2
DISBURSEMENT --	Liens From: CA - COLLECTIONS ADMIN FEE	To: 001-0000-117-1010 - ALLOW FOR UNCO...	24.72		

Attachment: FY23 Uncollectible Account Adjustments (4258 : Uncollectible Utility Account Adjustments FY2023)

03-01478-05	JOHN(VACANT) KIFER JR	632 STATE AVE		40.88	
DISBURSEMENT --	Liens From: TX - TX	To: 001-0000-117-1010 - ALLOW FOR UNCO...	0.28		
	CA - COLLECTIONS ADMIN FEE	001-0000-117-1010 - ALLOW FOR UNCO...	35.00		
	1R - RENEW AND REPLACE WATER	407-0000-117-1010 - ALLOW FOR UNCO...	2.80		
	3R - RENEW AND REPLACE SEWER	407-0000-117-1010 - ALLOW FOR UNCO...	2.80		
03-01492-09	DEBORAH H YOST	644 STATE AVE		59.91	5
DISBURSEMENT --	Liens From: 57 - SEWER	To: 400-0000-117-1010 - ALLOW FOR UNCO...	1.90		
	CA - COLLECTIONS ADMIN FEE	001-0000-117-1010 - ALLOW FOR UNCO...	35.00		
	47 - REFUSE BULK	495-0000-117-1010 - ALLOW FOR UNCO...	23.01		
03-01518-06	MARION ROCCO	724 STATE AVE		48.86	4
DISBURSEMENT --	Liens From: CA - COLLECTIONS ADMIN FEE	To: 001-0000-117-1010 - ALLOW FOR UNCO...	35.00		
	1R - RENEW AND REPLACE WATER	407-0000-117-1010 - ALLOW FOR UNCO...	6.60		
	3R - RENEW AND REPLACE SEWER	407-0000-117-1010 - ALLOW FOR UNCO...	7.26		
03-01520-09	SAMUEL COX	726 STATE AVE		7.50	
DISBURSEMENT --	Liens From: CC - DELINQUENT ACCOUNT FEE	To: 400-0000-117-1010 - ALLOW FOR UNCO...	7.50		
03-01520-10	BARBARA(VACANT) COX	726 STATE AVE		36.47	3
DISBURSEMENT --	Liens From: TX - TX	To: 001-0000-117-1010 - ALLOW FOR UNCO...	0.07		
	CA - COLLECTIONS ADMIN FEE	001-0000-117-1010 - ALLOW FOR UNCO...	35.00		
	1R - RENEW AND REPLACE WATER	407-0000-117-1010 - ALLOW FOR UNCO...	0.70		
	3R - RENEW AND REPLACE SEWER	407-0000-117-1010 - ALLOW FOR UNCO...	0.70		
03-01624-02	RAYMOND NOWICKI	722 CARSWELL AVE #B		35.00	3
DISBURSEMENT --	Liens From: CA - COLLECTIONS ADMIN FEE	To: 001-0000-117-1010 - ALLOW FOR UNCO...	35.00		
03-01628-02	RAYMOND NOWICKI	722 CARSWELL AVE #D		35.00	3
DISBURSEMENT --	Liens From: CA - COLLECTIONS ADMIN FEE	To: 001-0000-117-1010 - ALLOW FOR UNCO...	35.00		
03-02040-02	PRODUCT QUEST MANUFACTURING	330 CARSWELL AVE		10,060.95	10,06
DISBURSEMENT --	Liens From: TX - TX	To: 001-0000-117-1010 - ALLOW FOR UNCO...	2.49		
	CA - COLLECTIONS ADMIN FEE	001-0000-117-1010 - ALLOW FOR UNCO...	35.00		
	1R - RENEW AND REPLACE WATER	407-0000-117-1010 - ALLOW FOR UNCO...	3.00		
	42 - REFUSE	495-0000-117-1010 - ALLOW FOR UNCO...	1032.76		
	52 - SEWER COMMERCIAL	400-0000-117-1010 - ALLOW FOR UNCO...	25.17		
	RF - REFUSE	495-0000-117-1010 - ALLOW FOR UNCO...	7169.38		
	3R - RENEW AND REPLACE SEWER	407-0000-117-1010 - ALLOW FOR UNCO...	3.00		
	02 - WATER INSIDE COMMER	400-0000-117-1010 - ALLOW FOR UNCO...	21.89		
	PN - PENALTY	400-0000-117-1010 - ALLOW FOR UNCO...	1768.26		
03-08196-02	PRODUCT QUEST MANUFACTURING	360 3RD ST		2,437.97	2,43
DISBURSEMENT --	Liens From: 22 - IRRIG INSIDE COMMER	To: 400-0000-117-1010 - ALLOW FOR UNCO...	723.37		
	CA - COLLECTIONS ADMIN FEE	001-0000-117-1010 - ALLOW FOR UNCO...	35.00		
	1R - RENEW AND REPLACE WATER	407-0000-117-1010 - ALLOW FOR UNCO...	6.00		
	52 - SEWER COMMERCIAL	400-0000-117-1010 - ALLOW FOR UNCO...	422.02		
	3R - RENEW AND REPLACE SEWER	407-0000-117-1010 - ALLOW FOR UNCO...	3.00		
	02 - WATER INSIDE COMMER	400-0000-117-1010 - ALLOW FOR UNCO...	56.99		
	PN - PENALTY	400-0000-117-1010 - ALLOW FOR UNCO...	1191.59		
04-00506-02	JONIS BACON SNAPZ	1008 RIDGEWOOD AVE		64.03	6
DISBURSEMENT --	Liens From: CA - COLLECTIONS ADMIN FEE	To: 001-0000-117-1010 - ALLOW FOR UNCO...	35.00		
	42 - REFUSE	495-0000-117-1010 - ALLOW FOR UNCO...	29.03		
04-01568-06	TANNIA (VCT) JOHNSON	919 STATE AVE		41.51	4
DISBURSEMENT --	Liens From: TX - TX	To: 001-0000-117-1010 - ALLOW FOR UNCO...	0.31		
	CA - COLLECTIONS ADMIN FEE	001-0000-117-1010 - ALLOW FOR UNCO...	35.00		
	1R - RENEW AND REPLACE WATER	407-0000-117-1010 - ALLOW FOR UNCO...	3.10		
	3R - RENEW AND REPLACE SEWER	407-0000-117-1010 - ALLOW FOR UNCO...	3.10		
04-14022-08	VINCENT WARD	942 CARSWELL AVE		104.98	10
DISBURSEMENT --	Liens From: TX - TX	To: 001-0000-117-1010 - ALLOW FOR UNCO...	0.12		
	CA - COLLECTIONS ADMIN FEE	001-0000-117-1010 - ALLOW FOR UNCO...	35.00		
	1R - RENEW AND REPLACE WATER	407-0000-117-1010 - ALLOW FOR UNCO...	0.20		
	42 - REFUSE	495-0000-117-1010 - ALLOW FOR UNCO...	34.39		
	CC - DELINQUENT ACCOUNT FEE	400-0000-117-1010 - ALLOW FOR UNCO...	25.00		
	52 - SEWER COMMERCIAL	400-0000-117-1010 - ALLOW FOR UNCO...	1.17		
	3R - RENEW AND REPLACE SEWER	407-0000-117-1010 - ALLOW FOR UNCO...	0.20		
	02 - WATER INSIDE COMMER	400-0000-117-1010 - ALLOW FOR UNCO...	1.02		
	PN - PENALTY	400-0000-117-1010 - ALLOW FOR UNCO...	7.88		

Attachment: FY23 Uncollectible Account Adjustments (4258 : Uncollectible Utility Account Adjustments FY2023)

05-02618-12	RICARDO VALENCIA	1428 RIVERSIDE DR		47.14	
DISBURSEMENT --	Liens From: CA - COLLECTIONS ADMIN FEE	To: 001-0000-117-1010 - ALLOW FOR UNCO...	35.00		
	47 - REFUSE BULK	495-0000-117-1010 - ALLOW FOR UNCO...	12.14		
05-04644-03	JAMES ALAN TAYLOR	1236 DAYTONA AVE		79.62	7
DISBURSEMENT --	Liens From: CA - COLLECTIONS ADMIN FEE	To: 001-0000-117-1010 - ALLOW FOR UNCO...	35.00		
	CC - DELINQUENT ACCOUNT FEE	400-0000-117-1010 - ALLOW FOR UNCO...	25.00		
	47 - REFUSE BULK	495-0000-117-1010 - ALLOW FOR UNCO...	19.62		
05-04648-04	DANIEL BOYLE (VACANT)	1238 DAYTONA AVE		44.24	4
DISBURSEMENT --	Liens From: TX - TX	To: 001-0000-117-1010 - ALLOW FOR UNCO...	0.44		
	CA - COLLECTIONS ADMIN FEE	001-0000-117-1010 - ALLOW FOR UNCO...	35.00		
	1R - RENEW AND REPLACE WATER	407-0000-117-1010 - ALLOW FOR UNCO...	4.40		
	3R - RENEW AND REPLACE SEWER	407-0000-117-1010 - ALLOW FOR UNCO...	4.40		
05-06112-04	MARY GORDON	135 12TH ST #A		67.82	6
DISBURSEMENT --	Liens From: TX - TX	To: 001-0000-117-1010 - ALLOW FOR UNCO...	2.01		
	57 - SEWER	400-0000-117-1010 - ALLOW FOR UNCO...	19.36		
	1R - RENEW AND REPLACE WATER	407-0000-117-1010 - ALLOW FOR UNCO...	3.30		
	47 - REFUSE BULK	495-0000-117-1010 - ALLOW FOR UNCO...	23.01		
	07 - WATER	400-0000-117-1010 - ALLOW FOR UNCO...	16.84		
	3R - RENEW AND REPLACE SEWER	407-0000-117-1010 - ALLOW FOR UNCO...	3.30		
05-06320-02	CYNTHIA L CONWAY	1141 HOLLY AVE		536.60	3
DISBURSEMENT --	Liens From: TX - TX	To: 001-0000-117-1010 - ALLOW FOR UNCO...	1.33		
	1R - RENEW AND REPLACE WATER	407-0000-117-1010 - ALLOW FOR UNCO...	13.30		
	3R - RENEW AND REPLACE SEWER	407-0000-117-1010 - ALLOW FOR UNCO...	13.30		
	PN - PENALTY	400-0000-117-1010 - ALLOW FOR UNCO...	2.97		
05-11906-03	CHRISTINA (VACANT) CHAU	1136 HOLLY AVE		48.02	4
DISBURSEMENT --	Liens From: TX - TX	To: 001-0000-117-1010 - ALLOW FOR UNCO...	0.62		
	CA - COLLECTIONS ADMIN FEE	001-0000-117-1010 - ALLOW FOR UNCO...	35.00		
	1R - RENEW AND REPLACE WATER	407-0000-117-1010 - ALLOW FOR UNCO...	6.20		
	3R - RENEW AND REPLACE SEWER	407-0000-117-1010 - ALLOW FOR UNCO...	6.20		
06-03090-03	US BANK TRUST NA TR(VCT)	132 FLOMICH ST		99.05	9
DISBURSEMENT --	Liens From: TX - TX	To: 001-0000-117-1010 - ALLOW FOR UNCO...	4.17		
	1R - RENEW AND REPLACE WATER	407-0000-117-1010 - ALLOW FOR UNCO...	41.70		
	3R - RENEW AND REPLACE SEWER	407-0000-117-1010 - ALLOW FOR UNCO...	41.70		
	PN - PENALTY	400-0000-117-1010 - ALLOW FOR UNCO...	11.48		
06-03710-08	GLENFORD SEXTON	1502 RIDGE AVE		87.49	8
DISBURSEMENT --	Liens From: 57 - SEWER	To: 400-0000-117-1010 - ALLOW FOR UNCO...	17.44		
	CA - COLLECTIONS ADMIN FEE	001-0000-117-1010 - ALLOW FOR UNCO...	35.00		
	47 - REFUSE BULK	495-0000-117-1010 - ALLOW FOR UNCO...	23.01		
	PN - PENALTY	400-0000-117-1010 - ALLOW FOR UNCO...	12.04		
06-03832-03	JASON & DOREEN MAYNARD (VCT)	1624 RIDGE AVE		44.46	4
DISBURSEMENT --	Liens From: CA - COLLECTIONS ADMIN FEE	To: 001-0000-117-1010 - ALLOW FOR UNCO...	35.00		
	1R - RENEW AND REPLACE WATER	407-0000-117-1010 - ALLOW FOR UNCO...	4.00		
	3R - RENEW AND REPLACE SEWER	407-0000-117-1010 - ALLOW FOR UNCO...	4.00		
	PN - PENALTY	400-0000-117-1010 - ALLOW FOR UNCO...	1.46		
06-03886-06	PATRICK MULDER	1720 RIDGE AVE		83.54	8
DISBURSEMENT --	Liens From: 57 - SEWER	To: 400-0000-117-1010 - ALLOW FOR UNCO...	0.53		
	CA - COLLECTIONS ADMIN FEE	001-0000-117-1010 - ALLOW FOR UNCO...	35.00		
	CC - DELINQUENT ACCOUNT FEE	400-0000-117-1010 - ALLOW FOR UNCO...	25.00		
	47 - REFUSE BULK	495-0000-117-1010 - ALLOW FOR UNCO...	23.01		
07-01454-01	ANGELICA HEALTH SVS(BANKRUPTCY	1250 STATE AVE		14.37	1
DISBURSEMENT --	Liens From: 41 - REFUSE	To: 495-0000-117-1010 - ALLOW FOR UNCO...	14.37		
07-09944-03	MICHAEL STEPHEN CULVER	1299 STATE AVE #I		79.42	7
DISBURSEMENT --	Liens From: 42 - REFUSE	To: 495-0000-117-1010 - ALLOW FOR UNCO...	34.39		
	CC - DELINQUENT ACCOUNT FEE	400-0000-117-1010 - ALLOW FOR UNCO...	25.00		
	52 - SEWER COMMERCIAL	400-0000-117-1010 - ALLOW FOR UNCO...	3.02		
	PN - PENALTY	400-0000-117-1010 - ALLOW FOR UNCO...	17.01		
08-01116-09	JANET(VACANT) BERNSTEIN	1507 STATE AVE #X		52.48	5
DISBURSEMENT --	Liens From: TX - TX	To: 001-0000-117-1010 - ALLOW FOR UNCO...	0.73		
	CA - COLLECTIONS ADMIN FEE	001-0000-117-1010 - ALLOW FOR UNCO...	35.00		
	1R - RENEW AND REPLACE WATER	407-0000-117-1010 - ALLOW FOR UNCO...	7.30		
	3R - RENEW AND REPLACE SEWER	407-0000-117-1010 - ALLOW FOR UNCO...	7.30		
	PN - PENALTY	400-0000-117-1010 - ALLOW FOR UNCO...	2.15		

Attachment: FY23 Uncollectible Account Adjustments (4258 : Uncollectible Utility Account Adjustments FY2023)

08-01120-17	DAN E BERNSTEIN TR (VACANT)	1507 STATE AVE #Z		38.99	
DISBURSEMENT --	Liens From: TX - TX	To: 001-0000-117-1010 - ALLOW FOR UNCO...	0.19		
	CA - COLLECTIONS ADMIN FEE	001-0000-117-1010 - ALLOW FOR UNCO...	35.00		
	1R - RENEW AND REPLACE WATER	407-0000-117-1010 - ALLOW FOR UNCO...	1.90		
	3R - RENEW AND REPLACE SEWER	407-0000-117-1010 - ALLOW FOR UNCO...	1.90		
08-05658-23	CHAD(VACANT) SHULTZ	1610 ESPANOLA Ave		98.69	9
DISBURSEMENT --	Liens From: TX - TX	To: 001-0000-117-1010 - ALLOW FOR UNCO...	2.67		
	CA - COLLECTIONS ADMIN FEE	001-0000-117-1010 - ALLOW FOR UNCO...	35.00		
	1R - RENEW AND REPLACE WATER	407-0000-117-1010 - ALLOW FOR UNCO...	26.70		
	3R - RENEW AND REPLACE SEWER	407-0000-117-1010 - ALLOW FOR UNCO...	26.70		
	PN - PENALTY	400-0000-117-1010 - ALLOW FOR UNCO...	7.62		
08-05674-05	AMANDA(VACANT) MORRIS	1620 ESPANOLA AVE #C		64.75	6
DISBURSEMENT --	Liens From: TX - TX	To: 001-0000-117-1010 - ALLOW FOR UNCO...	1.30		
	CA - COLLECTIONS ADMIN FEE	001-0000-117-1010 - ALLOW FOR UNCO...	35.00		
	1R - RENEW AND REPLACE WATER	407-0000-117-1010 - ALLOW FOR UNCO...	13.00		
	3R - RENEW AND REPLACE SEWER	407-0000-117-1010 - ALLOW FOR UNCO...	13.00		
	PN - PENALTY	400-0000-117-1010 - ALLOW FOR UNCO...	2.45		
08-05696-13	JUST INTL EDUCATION LLC (VCT)	1621 ESPANOLA AVE		39.62	3
DISBURSEMENT --	Liens From: TX - TX	To: 001-0000-117-1010 - ALLOW FOR UNCO...	0.22		
	CA - COLLECTIONS ADMIN FEE	001-0000-117-1010 - ALLOW FOR UNCO...	35.00		
	1R - RENEW AND REPLACE WATER	407-0000-117-1010 - ALLOW FOR UNCO...	2.20		
	3R - RENEW AND REPLACE SEWER	407-0000-117-1010 - ALLOW FOR UNCO...	2.20		
08-05696-14	ALTERNATIVE ASSETS LLC	1621 ESPANOLA AVE		41.30	4
DISBURSEMENT --	Liens From: TX - TX	To: 001-0000-117-1010 - ALLOW FOR UNCO...	0.22		
	MC - MISC	400-0000-117-1010 - ALLOW FOR UNCO...	1.68		
	CA - COLLECTIONS ADMIN FEE	001-0000-117-1010 - ALLOW FOR UNCO...	35.00		
	1R - RENEW AND REPLACE WATER	407-0000-117-1010 - ALLOW FOR UNCO...	2.20		
	3R - RENEW AND REPLACE SEWER	407-0000-117-1010 - ALLOW FOR UNCO...	2.20		
08-05794-12	REGINO ZARAGOZA SANCHEZ	1694 ESPANOLA AVE		60.27	6
DISBURSEMENT --	Liens From: 51 - SEWER	To: 400-0000-117-1010 - ALLOW FOR UNCO...	0.27		
	CA - COLLECTIONS ADMIN FEE	001-0000-117-1010 - ALLOW FOR UNCO...	35.00		
	CC - DELINQUENT ACCOUNT FEE	400-0000-117-1010 - ALLOW FOR UNCO...	25.00		
08-15306-05	FAMILY DOLLAR	782 S YONGE ST		15.60	1
DISBURSEMENT --	Liens From: PN - PENALTY	To: 400-0000-117-1010 - ALLOW FOR UNCO...	15.60		
08-15372-02	MONTICELLI INVESTMENT INC.(VCT)	1620 STATE AVE #306		152.85	15
DISBURSEMENT --	Liens From: TX - TX	To: 001-0000-117-1010 - ALLOW FOR UNCO...	3.22		
	1R - RENEW AND REPLACE WATER	407-0000-117-1010 - ALLOW FOR UNCO...	10.50		
	42 - REFUSE	495-0000-117-1010 - ALLOW FOR UNCO...	68.78		
	52 - SEWER COMMERCIAL	400-0000-117-1010 - ALLOW FOR UNCO...	25.23		
	3R - RENEW AND REPLACE SEWER	407-0000-117-1010 - ALLOW FOR UNCO...	10.50		
	02 - WATER INSIDE COMMER	400-0000-117-1010 - ALLOW FOR UNCO...	21.94		
	PN - PENALTY	400-0000-117-1010 - ALLOW FOR UNCO...	12.68		
08-15372-03	MINORITY RACING ASSOC	1620 STATE AVE #306		94.67	9
DISBURSEMENT --	Liens From: TX - TX	To: 001-0000-117-1010 - ALLOW FOR UNCO...	0.79		
	1R - RENEW AND REPLACE WATER	407-0000-117-1010 - ALLOW FOR UNCO...	1.30		
	42 - REFUSE	495-0000-117-1010 - ALLOW FOR UNCO...	34.39		
	CC - DELINQUENT ACCOUNT FEE	400-0000-117-1010 - ALLOW FOR UNCO...	25.00		
	52 - SEWER COMMERCIAL	400-0000-117-1010 - ALLOW FOR UNCO...	7.63		
	3R - RENEW AND REPLACE SEWER	407-0000-117-1010 - ALLOW FOR UNCO...	1.30		
	02 - WATER INSIDE COMMER	400-0000-117-1010 - ALLOW FOR UNCO...	6.63		
	PN - PENALTY	400-0000-117-1010 - ALLOW FOR UNCO...	17.63		
09-06956-20	THERESA LEWIS	558 3RD ST		57.20	5
DISBURSEMENT --	Liens From: CA - COLLECTIONS ADMIN FEE	To: 001-0000-117-1010 - ALLOW FOR UNCO...	35.00		
	47 - REFUSE BULK	495-0000-117-1010 - ALLOW FOR UNCO...	22.20		
09-06962-30	ENRICO SALVATORE FALISI	561 3RD ST		62.51	6
DISBURSEMENT --	Liens From: CA - COLLECTIONS ADMIN FEE	To: 001-0000-117-1010 - ALLOW FOR UNCO...	35.00		
	CC - DELINQUENT ACCOUNT FEE	400-0000-117-1010 - ALLOW FOR UNCO...	25.00		
	47 - REFUSE BULK	495-0000-117-1010 - ALLOW FOR UNCO...	2.51		

Attachment: FY23 Uncollectible Account Adjustments (4258 : Uncollectible Utility Account Adjustments FY2023)

09-06996-10	MICHAEL LUBANSKI (VACANT)	322 ELSIE AVE		62.09	
DISBURSEMENT --	Liens From: TX - TX	To: 001-0000-117-1010 - ALLOW FOR UNCO...	1.17		
	CA - COLLECTIONS ADMIN FEE	001-0000-117-1010 - ALLOW FOR UNCO...	35.00		
	1R - RENEW AND REPLACE WATER	407-0000-117-1010 - ALLOW FOR UNCO...	11.70		
	3R - RENEW AND REPLACE SEWER	407-0000-117-1010 - ALLOW FOR UNCO...	11.70		
	PN - PENALTY	400-0000-117-1010 - ALLOW FOR UNCO...	2.52		
09-07010-01	KATHERINE(VACANT) DECHERT	340 ELSIE AVE		39.62	3
DISBURSEMENT --	Liens From: TX - TX	To: 001-0000-117-1010 - ALLOW FOR UNCO...	0.22		
	CA - COLLECTIONS ADMIN FEE	001-0000-117-1010 - ALLOW FOR UNCO...	35.00		
	1R - RENEW AND REPLACE WATER	407-0000-117-1010 - ALLOW FOR UNCO...	2.20		
	3R - RENEW AND REPLACE SEWER	407-0000-117-1010 - ALLOW FOR UNCO...	2.20		
09-07022-04	JOSEPH P RAHL	356 ELSIE AVE		87.58	8
DISBURSEMENT --	Liens From: 57 - SEWER	To: 400-0000-117-1010 - ALLOW FOR UNCO...	4.57		
	CA - COLLECTIONS ADMIN FEE	001-0000-117-1010 - ALLOW FOR UNCO...	35.00		
	CC - DELINQUENT ACCOUNT FEE	400-0000-117-1010 - ALLOW FOR UNCO...	25.00		
	47 - REFUSE BULK	495-0000-117-1010 - ALLOW FOR UNCO...	23.01		
09-07028-15	GRAINGER LHD LLC	401 ELSIE AVE		81.40	8
DISBURSEMENT --	Liens From: TX - TX	To: 001-0000-117-1010 - ALLOW FOR UNCO...	2.59		
	57 - SEWER	400-0000-117-1010 - ALLOW FOR UNCO...	19.36		
	1R - RENEW AND REPLACE WATER	407-0000-117-1010 - ALLOW FOR UNCO...	9.80		
	47 - REFUSE BULK	495-0000-117-1010 - ALLOW FOR UNCO...	23.01		
	07 - WATER	400-0000-117-1010 - ALLOW FOR UNCO...	16.84		
	3R - RENEW AND REPLACE SEWER	407-0000-117-1010 - ALLOW FOR UNCO...	9.80		
09-07154-04	DONNA (VACANT) TOCE	423 DOROTHY AVE		41.72	4
DISBURSEMENT --	Liens From: TX - TX	To: 001-0000-117-1010 - ALLOW FOR UNCO...	0.32		
	CA - COLLECTIONS ADMIN FEE	001-0000-117-1010 - ALLOW FOR UNCO...	35.00		
	1R - RENEW AND REPLACE WATER	407-0000-117-1010 - ALLOW FOR UNCO...	3.20		
	3R - RENEW AND REPLACE SEWER	407-0000-117-1010 - ALLOW FOR UNCO...	3.20		
09-07240-04	KARI GAETH	328 CLIFTON AVE		346.63	3
DISBURSEMENT --	Liens From: TX - TX	To: 001-0000-117-1010 - ALLOW FOR UNCO...	0.13		
	CA - COLLECTIONS ADMIN FEE	001-0000-117-1010 - ALLOW FOR UNCO...	35.00		
	1R - RENEW AND REPLACE WATER	407-0000-117-1010 - ALLOW FOR UNCO...	1.30		
	3R - RENEW AND REPLACE SEWER	407-0000-117-1010 - ALLOW FOR UNCO...	1.30		
09-07246-01	HOYT CARTER (VACANT) BROOKS	339 CLIFTON AVE		53.90	5
DISBURSEMENT --	Liens From: TX - TX	To: 001-0000-117-1010 - ALLOW FOR UNCO...	0.30		
	MC - MISC	400-0000-117-1010 - ALLOW FOR UNCO...	12.60		
	CA - COLLECTIONS ADMIN FEE	001-0000-117-1010 - ALLOW FOR UNCO...	35.00		
	1R - RENEW AND REPLACE WATER	407-0000-117-1010 - ALLOW FOR UNCO...	3.00		
	3R - RENEW AND REPLACE SEWER	407-0000-117-1010 - ALLOW FOR UNCO...	3.00		
09-08256-09	HENRY FRANKLIN GIBSON	559 CORPORATION AVE		71.20	7
DISBURSEMENT --	Liens From: 57 - SEWER	To: 400-0000-117-1010 - ALLOW FOR UNCO...	10.56		
	CA - COLLECTIONS ADMIN FEE	001-0000-117-1010 - ALLOW FOR UNCO...	35.00		
	47 - REFUSE BULK	495-0000-117-1010 - ALLOW FOR UNCO...	23.01		
	07 - WATER	400-0000-117-1010 - ALLOW FOR UNCO...	2.63		
09-08718-07	DENNIS F OSETH (VACANT)	313 CENTER Ave		8.15	
DISBURSEMENT --	Liens From: TX - TX	To: 001-0000-117-1010 - ALLOW FOR UNCO...	0.37		
	1R - RENEW AND REPLACE WATER	407-0000-117-1010 - ALLOW FOR UNCO...	3.70		
	3R - RENEW AND REPLACE SEWER	407-0000-117-1010 - ALLOW FOR UNCO...	3.70		
	PN - PENALTY	400-0000-117-1010 - ALLOW FOR UNCO...	0.38		
09-10238-06	ERICA(VACANT) JOHNSON	622 VIRGINIA AVE		51.60	5
DISBURSEMENT --	Liens From: TX - TX	To: 001-0000-117-1010 - ALLOW FOR UNCO...	0.39		
	CA - COLLECTIONS ADMIN FEE	001-0000-117-1010 - ALLOW FOR UNCO...	35.00		
	1R - RENEW AND REPLACE WATER	407-0000-117-1010 - ALLOW FOR UNCO...	6.90		
	3R - RENEW AND REPLACE SEWER	407-0000-117-1010 - ALLOW FOR UNCO...	6.90		
	PN - PENALTY	400-0000-117-1010 - ALLOW FOR UNCO...	2.41		
09-10242-20	GINA L DIODATO	624 VIRGINIA AVE		79.07	7
DISBURSEMENT --	Liens From: 57 - SEWER	To: 400-0000-117-1010 - ALLOW FOR UNCO...	21.06		
	CA - COLLECTIONS ADMIN FEE	001-0000-117-1010 - ALLOW FOR UNCO...	35.00		
	47 - REFUSE BULK	495-0000-117-1010 - ALLOW FOR UNCO...	23.01		

Attachment: FY23 Uncollectible Account Adjustments (4258 : Uncollectible Utility Account Adjustments FY2023)

09-10266-05	DUNIA MELGAR	615 FLORIDA AVE		72.16	
DISBURSEMENT --	Liens From: 57 - SEWER	To: 400-0000-117-1010 - ALLOW FOR UNCO...	14.15		
	CA - COLLECTIONS ADMIN FEE	001-0000-117-1010 - ALLOW FOR UNCO...	35.00		
	47 - REFUSE BULK	495-0000-117-1010 - ALLOW FOR UNCO...	23.01		
09-11212-17	DAVID WILLIAM RHODY (VACANT)	836 ORANGE AVE		48.24	4
DISBURSEMENT --	Liens From: TX - TX	To: 001-0000-117-1010 - ALLOW FOR UNCO...	0.28		
	CA - COLLECTIONS ADMIN FEE	001-0000-117-1010 - ALLOW FOR UNCO...	35.00		
	1R - RENEW AND REPLACE WATER	407-0000-117-1010 - ALLOW FOR UNCO...	5.80		
	3R - RENEW AND REPLACE SEWER	407-0000-117-1010 - ALLOW FOR UNCO...	5.80		
	PN - PENALTY	400-0000-117-1010 - ALLOW FOR UNCO...	1.36		
09-11228-03	WILFRED NELSON (VACANT)	829 MAGNOLIA AVE		46.34	4
DISBURSEMENT --	Liens From: TX - TX	To: 001-0000-117-1010 - ALLOW FOR UNCO...	0.54		
	CA - COLLECTIONS ADMIN FEE	001-0000-117-1010 - ALLOW FOR UNCO...	35.00		
	1R - RENEW AND REPLACE WATER	407-0000-117-1010 - ALLOW FOR UNCO...	5.40		
	3R - RENEW AND REPLACE SEWER	407-0000-117-1010 - ALLOW FOR UNCO...	5.40		
09-11638-15	MKVY ENTERPRISES LLC	6 HOWARD DR		39.30	3
DISBURSEMENT --	Liens From: MC - MISC	To: 400-0000-117-1010 - ALLOW FOR UNCO...	4.30		
	CA - COLLECTIONS ADMIN FEE	001-0000-117-1010 - ALLOW FOR UNCO...	35.00		
09-14508-05	BRUCE BURNHAM (VCT)	806 MAGNOLIA AVE		10.09	1
DISBURSEMENT --	Liens From: TX - TX	To: 001-0000-117-1010 - ALLOW FOR UNCO...	0.13		
	1R - RENEW AND REPLACE WATER	407-0000-117-1010 - ALLOW FOR UNCO...	4.30		
	3R - RENEW AND REPLACE SEWER	407-0000-117-1010 - ALLOW FOR UNCO...	4.30		
	PN - PENALTY	400-0000-117-1010 - ALLOW FOR UNCO...	1.36		
10-07514-05	MARVIN HOBSON	629 ASH AVE		90.30	9
DISBURSEMENT --	Liens From: 57 - SEWER	To: 400-0000-117-1010 - ALLOW FOR UNCO...	42.66		
	47 - REFUSE BULK	495-0000-117-1010 - ALLOW FOR UNCO...	23.01		
	07 - WATER	400-0000-117-1010 - ALLOW FOR UNCO...	24.63		
10-07792-03	CASH FLOW LINKS FLORIDA LLC	602 S FLAMINGO DR		39.61	3
DISBURSEMENT --	Liens From: CA - COLLECTIONS ADMIN FEE	To: 001-0000-117-1010 - ALLOW FOR UNCO...	35.00		
	CC - DELINQUENT ACCOUNT FEE	400-0000-117-1010 - ALLOW FOR UNCO...	4.61		
10-07872-00	DORIS HARRIS	701 N FLAMINGO DR		79.96	7
DISBURSEMENT --	Liens From: 57 - SEWER	To: 400-0000-117-1010 - ALLOW FOR UNCO...	11.73		
	CA - COLLECTIONS ADMIN FEE	001-0000-117-1010 - ALLOW FOR UNCO...	35.00		
	47 - REFUSE BULK	495-0000-117-1010 - ALLOW FOR UNCO...	23.01		
	07 - WATER	400-0000-117-1010 - ALLOW FOR UNCO...	10.21		
	3R - RENEW AND REPLACE SEWER	407-0000-117-1010 - ALLOW FOR UNCO...	0.01		
10-07956-11	DORINDA D LOTHERT	729 N FLAMINGO DR		79.32	7
DISBURSEMENT --	Liens From: 57 - SEWER	To: 400-0000-117-1010 - ALLOW FOR UNCO...	21.31		
	CA - COLLECTIONS ADMIN FEE	001-0000-117-1010 - ALLOW FOR UNCO...	35.00		
	47 - REFUSE BULK	495-0000-117-1010 - ALLOW FOR UNCO...	23.01		
10-08210-02	WELLS FARGO BANK NA TR	1016 INDIAN OAKS W		13.10	1
DISBURSEMENT --	Liens From: CA - COLLECTIONS ADMIN FEE	To: 001-0000-117-1010 - ALLOW FOR UNCO...	13.10		
10-08410-00	REID R MALPHURS	335 LONDON RD		88.98	8
DISBURSEMENT --	Liens From: 57 - SEWER	To: 400-0000-117-1010 - ALLOW FOR UNCO...	22.29		
	CA - COLLECTIONS ADMIN FEE	001-0000-117-1010 - ALLOW FOR UNCO...	35.00		
	47 - REFUSE BULK	495-0000-117-1010 - ALLOW FOR UNCO...	23.01		
	07 - WATER	400-0000-117-1010 - ALLOW FOR UNCO...	8.68		
10-08606-11	JABARI R JACKSON	660 8TH ST #115		59.69	5
DISBURSEMENT --	Liens From: CA - COLLECTIONS ADMIN FEE	To: 001-0000-117-1010 - ALLOW FOR UNCO...	35.00		
	CC - DELINQUENT ACCOUNT FEE	400-0000-117-1010 - ALLOW FOR UNCO...	24.69		
10-09390-05	KENNETH WALKER	900 8TH ST		63.30	6
DISBURSEMENT --	Liens From: 57 - SEWER	To: 400-0000-117-1010 - ALLOW FOR UNCO...	5.29		
	CA - COLLECTIONS ADMIN FEE	001-0000-117-1010 - ALLOW FOR UNCO...	35.00		
	47 - REFUSE BULK	495-0000-117-1010 - ALLOW FOR UNCO...	23.01		
10-09424-16	WILLIAM T MILLER (VACANT)	725 ACIREMA DR		45.71	4
DISBURSEMENT --	Liens From: TX - TX	To: 001-0000-117-1010 - ALLOW FOR UNCO...	0.51		
	CA - COLLECTIONS ADMIN FEE	001-0000-117-1010 - ALLOW FOR UNCO...	35.00		
	1R - RENEW AND REPLACE WATER	407-0000-117-1010 - ALLOW FOR UNCO...	5.10		
	3R - RENEW AND REPLACE SEWER	407-0000-117-1010 - ALLOW FOR UNCO...	5.10		

Attachment: FY23 Uncollectible Account Adjustments (4258 : Uncollectible Utility Account Adjustments FY2023)

10-10052-01	1014 CHIPPEWA TRL LLC	1014 CHIPPEWA TRL		66.16	
DISBURSEMENT --	Liens From: TX - TX	To: 001-0000-117-1010 - ALLOW FOR UNCO...	0.37		
	57 - SEWER	400-0000-117-1010 - ALLOW FOR UNCO...	3.52		
	CA - COLLECTIONS ADMIN FEE	001-0000-117-1010 - ALLOW FOR UNCO...	35.00		
	1R - RENEW AND REPLACE WATER	407-0000-117-1010 - ALLOW FOR UNCO...	0.60		
	47 - REFUSE BULK	495-0000-117-1010 - ALLOW FOR UNCO...	23.01		
	07 - WATER	400-0000-117-1010 - ALLOW FOR UNCO...	3.06		
	3R - RENEW AND REPLACE SEWER	407-0000-117-1010 - ALLOW FOR UNCO...	0.60		
10-10108-02	ROBERT LOUIS MATTINGLY JR	629 ACORN CIR		0.23	
DISBURSEMENT --	Liens From: CA - COLLECTIONS ADMIN FEE	To: 001-0000-117-1010 - ALLOW FOR UNCO...	0.23		
10-10134-07	J-8 LAND PARTNERS LLLP	1555 N NOVA RD		9.24	
DISBURSEMENT --	Liens From: TX - TX	To: 001-0000-117-1010 - ALLOW FOR UNCO...	0.44		
	1R - RENEW AND REPLACE WATER	407-0000-117-1010 - ALLOW FOR UNCO...	4.40		
	3R - RENEW AND REPLACE SEWER	407-0000-117-1010 - ALLOW FOR UNCO...	4.40		
10-11762-07	JUSTIN C ALEXANDER	630 10TH ST		83.91	
DISBURSEMENT --	Liens From: CA - COLLECTIONS ADMIN FEE	To: 001-0000-117-1010 - ALLOW FOR UNCO...	35.00		
	CC - DELINQUENT ACCOUNT FEE	400-0000-117-1010 - ALLOW FOR UNCO...	25.00		
	PN - PENALTY	400-0000-117-1010 - ALLOW FOR UNCO...	23.91		
10-13148-04	SANDRA JEAN (VACANT) BOLCAR	1014 GREAT OAKS DR		42.35	
DISBURSEMENT --	Liens From: TX - TX	To: 001-0000-117-1010 - ALLOW FOR UNCO...	0.35		
	CA - COLLECTIONS ADMIN FEE	001-0000-117-1010 - ALLOW FOR UNCO...	35.00		
	1R - RENEW AND REPLACE WATER	407-0000-117-1010 - ALLOW FOR UNCO...	3.50		
	3R - RENEW AND REPLACE SEWER	407-0000-117-1010 - ALLOW FOR UNCO...	3.50		
11-05180-12	LAWRENCE R VANDENBERG	460 LPGA BLVD #B		55.80	
DISBURSEMENT --	Liens From: TX - TX	To: 001-0000-117-1010 - ALLOW FOR UNCO...	1.20		
	CA - COLLECTIONS ADMIN FEE	001-0000-117-1010 - ALLOW FOR UNCO...	35.00		
	1R - RENEW AND REPLACE WATER	407-0000-117-1010 - ALLOW FOR UNCO...	9.80		
	3R - RENEW AND REPLACE SEWER	407-0000-117-1010 - ALLOW FOR UNCO...	9.80		
11-05188-04	LAWRENCE R VANDENBERG	460 LPGA BLVD #C		56.90	
DISBURSEMENT --	Liens From: TX - TX	To: 001-0000-117-1010 - ALLOW FOR UNCO...	2.30		
	CA - COLLECTIONS ADMIN FEE	001-0000-117-1010 - ALLOW FOR UNCO...	35.00		
	1R - RENEW AND REPLACE WATER	407-0000-117-1010 - ALLOW FOR UNCO...	9.80		
	3R - RENEW AND REPLACE SEWER	407-0000-117-1010 - ALLOW FOR UNCO...	9.80		
11-06160-03	ROBERT ROSS	1485 CENTER Ave		61.76	
DISBURSEMENT --	Liens From: 57 - SEWER	To: 400-0000-117-1010 - ALLOW FOR UNCO...	3.75		
	CA - COLLECTIONS ADMIN FEE	001-0000-117-1010 - ALLOW FOR UNCO...	35.00		
	47 - REFUSE BULK	495-0000-117-1010 - ALLOW FOR UNCO...	23.01		
11-08640-06	SHANEIKA JORDAN	1216 BENDER AVE		82.35	
DISBURSEMENT --	Liens From: CA - COLLECTIONS ADMIN FEE	To: 001-0000-117-1010 - ALLOW FOR UNCO...	35.00		
	CC - DELINQUENT ACCOUNT FEE	400-0000-117-1010 - ALLOW FOR UNCO...	25.00		
	47 - REFUSE BULK	495-0000-117-1010 - ALLOW FOR UNCO...	22.35		
11-08934-14	NELL4 LLC(VACANT)	1141 POWERS AVE		45.79	
DISBURSEMENT --	Liens From: TX - TX	To: 001-0000-117-1010 - ALLOW FOR UNCO...	0.49		
	CA - COLLECTIONS ADMIN FEE	001-0000-117-1010 - ALLOW FOR UNCO...	35.00		
	1R - RENEW AND REPLACE WATER	407-0000-117-1010 - ALLOW FOR UNCO...	4.90		
	3R - RENEW AND REPLACE SEWER	407-0000-117-1010 - ALLOW FOR UNCO...	5.40		
11-09044-18	ADVANCED MINERALS INC	1332 POWERS AVE		42.10	
DISBURSEMENT --	Liens From: TX - TX	To: 001-0000-117-1010 - ALLOW FOR UNCO...	0.30		
	CA - COLLECTIONS ADMIN FEE	001-0000-117-1010 - ALLOW FOR UNCO...	35.00		
	1R - RENEW AND REPLACE WATER	407-0000-117-1010 - ALLOW FOR UNCO...	3.40		
	3R - RENEW AND REPLACE SEWER	407-0000-117-1010 - ALLOW FOR UNCO...	3.40		
11-09400-00	GREGORY WALKER	1105 CAVE AVE #E		79.43	
DISBURSEMENT --	Liens From: CA - COLLECTIONS ADMIN FEE	To: 001-0000-117-1010 - ALLOW FOR UNCO...	35.00		
	42 - REFUSE	495-0000-117-1010 - ALLOW FOR UNCO...	34.39		
	52 - SEWER COMMERCIAL	400-0000-117-1010 - ALLOW FOR UNCO...	10.04		

Attachment: FY23 Uncollectible Account Adjustments (4258 : Uncollectible Utility Account Adjustments FY2023)

11-09466-01	WILLIAMS (VACANT) FREDDIE	1127 GRAHAM AVE		423.28	
DISBURSEMENT --	Liens From: TX - TX	To: 001-0000-117-1010 - ALLOW FOR UNCO...	9.95		
	57 - SEWER	400-0000-117-1010 - ALLOW FOR UNCO...	24.17		
	CA - COLLECTIONS ADMIN FEE	001-0000-117-1010 - ALLOW FOR UNCO...	35.00		
	1R - RENEW AND REPLACE WATER	407-0000-117-1010 - ALLOW FOR UNCO...	95.50		
	47 - REFUSE BULK	495-0000-117-1010 - ALLOW FOR UNCO...	46.27		
	RF - REFUSE	495-0000-117-1010 - ALLOW FOR UNCO...	56.00		
	07 - WATER	400-0000-117-1010 - ALLOW FOR UNCO...	21.02		
	3R - RENEW AND REPLACE SEWER	407-0000-117-1010 - ALLOW FOR UNCO...	95.50		
	PN - PENALTY	400-0000-117-1010 - ALLOW FOR UNCO...	39.87		
11-09748-01	LORRAINE(VACANT) TOUCHTON	1312 JARECKI AVE		68.38	6
DISBURSEMENT --	Liens From: TX - TX	To: 001-0000-117-1010 - ALLOW FOR UNCO...	1.42		
	CA - COLLECTIONS ADMIN FEE	001-0000-117-1010 - ALLOW FOR UNCO...	35.00		
	1R - RENEW AND REPLACE WATER	407-0000-117-1010 - ALLOW FOR UNCO...	14.20		
	3R - RENEW AND REPLACE SEWER	407-0000-117-1010 - ALLOW FOR UNCO...	14.20		
	PN - PENALTY	400-0000-117-1010 - ALLOW FOR UNCO...	3.56		
11-09764-12	THEODORE ABBALEO(VACANT)	1327 JARECKI AVE		39.20	3
DISBURSEMENT --	Liens From: TX - TX	To: 001-0000-117-1010 - ALLOW FOR UNCO...	0.20		
	CA - COLLECTIONS ADMIN FEE	001-0000-117-1010 - ALLOW FOR UNCO...	35.00		
	1R - RENEW AND REPLACE WATER	407-0000-117-1010 - ALLOW FOR UNCO...	2.00		
	3R - RENEW AND REPLACE SEWER	407-0000-117-1010 - ALLOW FOR UNCO...	2.00		
11-10400-28	OCEAN BLUE APARTMENTS LLC(VCT)	509 WALKER ST		54.60	5
DISBURSEMENT --	Liens From: TX - TX	To: 001-0000-117-1010 - ALLOW FOR UNCO...	1.20		
	CA - COLLECTIONS ADMIN FEE	001-0000-117-1010 - ALLOW FOR UNCO...	35.00		
	1R - RENEW AND REPLACE WATER	407-0000-117-1010 - ALLOW FOR UNCO...	9.20		
	3R - RENEW AND REPLACE SEWER	407-0000-117-1010 - ALLOW FOR UNCO...	9.20		
11-10434-04	RONALD M ROEHR	1501 TUSCALOOSA AVE		59.37	5
DISBURSEMENT --	Liens From: TX - TX	To: 001-0000-117-1010 - ALLOW FOR UNCO...	0.06		
	57 - SEWER	400-0000-117-1010 - ALLOW FOR UNCO...	0.59		
	CA - COLLECTIONS ADMIN FEE	001-0000-117-1010 - ALLOW FOR UNCO...	35.00		
	1R - RENEW AND REPLACE WATER	407-0000-117-1010 - ALLOW FOR UNCO...	0.10		
	47 - REFUSE BULK	495-0000-117-1010 - ALLOW FOR UNCO...	23.01		
	07 - WATER	400-0000-117-1010 - ALLOW FOR UNCO...	0.51		
	3R - RENEW AND REPLACE SEWER	407-0000-117-1010 - ALLOW FOR UNCO...	0.10		
11-10466-02	EDMUND L WOOD	1556 TUSCALOOSA AVE		560.44	12
DISBURSEMENT --	Liens From: TX - TX	To: 001-0000-117-1010 - ALLOW FOR UNCO...	3.69		
	CA - COLLECTIONS ADMIN FEE	001-0000-117-1010 - ALLOW FOR UNCO...	35.00		
	1R - RENEW AND REPLACE WATER	407-0000-117-1010 - ALLOW FOR UNCO...	36.90		
	3R - RENEW AND REPLACE SEWER	407-0000-117-1010 - ALLOW FOR UNCO...	36.90		
	PN - PENALTY	400-0000-117-1010 - ALLOW FOR UNCO...	11.15		
11-10636-14	HELEN BROWN	1512 MOBILE AVE		14.88	1
DISBURSEMENT --	Liens From: CF - COLLECTIONS AGENCY %	To: 001-0000-117-1010 - ALLOW FOR UNCO...	0.64		
	1R - RENEW AND REPLACE WATER	407-0000-117-1010 - ALLOW FOR UNCO...	6.40		
	3R - RENEW AND REPLACE SEWER	407-0000-117-1010 - ALLOW FOR UNCO...	6.40		
	PN - PENALTY	400-0000-117-1010 - ALLOW FOR UNCO...	1.44		
11-10652-07	DEBRA LAPALLO RYAN	1536 MOBILE AVE		98.51	9
DISBURSEMENT --	Liens From: TX - TX	To: 001-0000-117-1010 - ALLOW FOR UNCO...	1.50		
	CA - COLLECTIONS ADMIN FEE	001-0000-117-1010 - ALLOW FOR UNCO...	35.00		
	1R - RENEW AND REPLACE WATER	407-0000-117-1010 - ALLOW FOR UNCO...	19.50		
	47 - REFUSE BULK	495-0000-117-1010 - ALLOW FOR UNCO...	23.01		
	3R - RENEW AND REPLACE SEWER	407-0000-117-1010 - ALLOW FOR UNCO...	19.50		
12-03650-01	STEPHEN WAYNE ROMANKO	1000 WALKER ST #350		49.84	4
DISBURSEMENT --	Liens From: CA - COLLECTIONS ADMIN FEE	To: 001-0000-117-1010 - ALLOW FOR UNCO...	35.00		
	CC - DELINQUENT ACCOUNT FEE	400-0000-117-1010 - ALLOW FOR UNCO...	14.84		
12-03700-01	ANN L FARWELL	1000 WALKER ST #356		59.45	5
DISBURSEMENT --	Liens From: CA - COLLECTIONS ADMIN FEE	To: 001-0000-117-1010 - ALLOW FOR UNCO...	35.00		
	1R - RENEW AND REPLACE WATER	407-0000-117-1010 - ALLOW FOR UNCO...	1.80		
	56 - SEWER MOBILE HOME	400-0000-117-1010 - ALLOW FOR UNCO...	11.66		
	06 - WATER INSIDE MH	400-0000-117-1010 - ALLOW FOR UNCO...	9.19		
	3R - RENEW AND REPLACE SEWER	407-0000-117-1010 - ALLOW FOR UNCO...	1.80		
12-04866-04	CAROL J BERGMAN	1000 WALKER ST # 76		47.13	4
DISBURSEMENT --	Liens From: CA - COLLECTIONS ADMIN FEE	To: 001-0000-117-1010 - ALLOW FOR UNCO...	35.00		
	CC - DELINQUENT ACCOUNT FEE	400-0000-117-1010 - ALLOW FOR UNCO...	12.13		

Attachment: FY23 Uncollectible Account Adjustments (4258 : Uncollectible Utility Account Adjustments FY2023)

12-05300-01	JACQUELINE VAIL	1000 WALKER ST #142		51.33	
DISBURSEMENT --	Liens From: CA - COLLECTIONS ADMIN FEE	To: 001-0000-117-1010 - ALLOW FOR UNCO...	35.00		
	CC - DELINQUENT ACCOUNT FEE	400-0000-117-1010 - ALLOW FOR UNCO...	16.33		
12-05688-00	SCOTT HENDRICKS	1000 WALKER ST #198		90.46	9
DISBURSEMENT --	Liens From: TX - TX	To: 001-0000-117-1010 - ALLOW FOR UNCO...	2.49		
	CA - COLLECTIONS ADMIN FEE	001-0000-117-1010 - ALLOW FOR UNCO...	35.00		
	1R - RENEW AND REPLACE WATER	407-0000-117-1010 - ALLOW FOR UNCO...	4.00		
	56 - SEWER MOBILE HOME	400-0000-117-1010 - ALLOW FOR UNCO...	24.05		
	06 - WATER INSIDE MH	400-0000-117-1010 - ALLOW FOR UNCO...	20.92		
	3R - RENEW AND REPLACE SEWER	407-0000-117-1010 - ALLOW FOR UNCO...	4.00		
12-05840-06	SUN HOLLY FOREST LLC (VCT)	1000 WALKER ST #214		108.26	10
DISBURSEMENT --	Liens From: MC - MISC	To: 400-0000-117-1010 - ALLOW FOR UNCO...	25.00		
	CA - COLLECTIONS ADMIN FEE	001-0000-117-1010 - ALLOW FOR UNCO...	35.00		
	1R - RENEW AND REPLACE WATER	407-0000-117-1010 - ALLOW FOR UNCO...	19.00		
	3R - RENEW AND REPLACE SEWER	407-0000-117-1010 - ALLOW FOR UNCO...	21.42		
	PN - PENALTY	400-0000-117-1010 - ALLOW FOR UNCO...	7.84		
12-06066-04	SUN HOLLY FOREST LLC (VCT)	1000 WALKER ST #256		69.45	6
DISBURSEMENT --	Liens From: TX - TX	To: 001-0000-117-1010 - ALLOW FOR UNCO...	0.19		
	MC - MISC	400-0000-117-1010 - ALLOW FOR UNCO...	25.00		
	CA - COLLECTIONS ADMIN FEE	001-0000-117-1010 - ALLOW FOR UNCO...	35.00		
	1R - RENEW AND REPLACE WATER	407-0000-117-1010 - ALLOW FOR UNCO...	4.10		
	3R - RENEW AND REPLACE SEWER	407-0000-117-1010 - ALLOW FOR UNCO...	4.10		
	PN - PENALTY	400-0000-117-1010 - ALLOW FOR UNCO...	1.06		
13-02206-17	ARDIE EVANS (VACANT)	1576 MEGAN BAY CIR		42.14	4
DISBURSEMENT --	Liens From: MC - MISC	To: 400-0000-117-1010 - ALLOW FOR UNCO...	7.14		
	CA - COLLECTIONS ADMIN FEE	001-0000-117-1010 - ALLOW FOR UNCO...	35.00		
13-02782-09	ROKEYA HABIB	1250 CHARTER OAKS CIR		29.22	2
DISBURSEMENT --	Liens From: MC - MISC	To: 400-0000-117-1010 - ALLOW FOR UNCO...	4.62		
	CA - COLLECTIONS ADMIN FEE	001-0000-117-1010 - ALLOW FOR UNCO...	24.60		
13-02972-03	RAYDEAN(VACANT) STEINER	1202 CHARTER OAKS CIR		48.32	4
DISBURSEMENT --	Liens From: TX - TX	To: 001-0000-117-1010 - ALLOW FOR UNCO...	0.61		
	CA - COLLECTIONS ADMIN FEE	001-0000-117-1010 - ALLOW FOR UNCO...	35.00		
	1R - RENEW AND REPLACE WATER	407-0000-117-1010 - ALLOW FOR UNCO...	6.10		
	3R - RENEW AND REPLACE SEWER	407-0000-117-1010 - ALLOW FOR UNCO...	6.10		
	PN - PENALTY	400-0000-117-1010 - ALLOW FOR UNCO...	0.51		
13-03068-22	MARK ADAMS	1601 BIRMINGHAM AVE		112.15	11
DISBURSEMENT --	Liens From: TX - TX	To: 001-0000-117-1010 - ALLOW FOR UNCO...	1.22		
	MC - MISC	400-0000-117-1010 - ALLOW FOR UNCO...	20.00		
	57 - SEWER	400-0000-117-1010 - ALLOW FOR UNCO...	11.15		
	CA - COLLECTIONS ADMIN FEE	001-0000-117-1010 - ALLOW FOR UNCO...	35.00		
	1R - RENEW AND REPLACE WATER	407-0000-117-1010 - ALLOW FOR UNCO...	2.50		
	47 - REFUSE BULK	495-0000-117-1010 - ALLOW FOR UNCO...	23.01		
	07 - WATER	400-0000-117-1010 - ALLOW FOR UNCO...	9.70		
	3R - RENEW AND REPLACE SEWER	407-0000-117-1010 - ALLOW FOR UNCO...	2.50		
	PN - PENALTY	400-0000-117-1010 - ALLOW FOR UNCO...	7.07		
13-03170-05	ALICE A ROBIN	1673 SPRING GARDEN CT		89.87	8
DISBURSEMENT --	Liens From: TX - TX	To: 001-0000-117-1010 - ALLOW FOR UNCO...	1.03		
	51 - SEWER	400-0000-117-1010 - ALLOW FOR UNCO...	11.12		
	MC - MISC	400-0000-117-1010 - ALLOW FOR UNCO...	25.00		
	CA - COLLECTIONS ADMIN FEE	001-0000-117-1010 - ALLOW FOR UNCO...	35.00		
	1R - RENEW AND REPLACE WATER	407-0000-117-1010 - ALLOW FOR UNCO...	1.60		
	01 - WATER INSIDE APT	400-0000-117-1010 - ALLOW FOR UNCO...	8.68		
	3R - RENEW AND REPLACE SEWER	407-0000-117-1010 - ALLOW FOR UNCO...	1.60		
	PN - PENALTY	400-0000-117-1010 - ALLOW FOR UNCO...	5.84		
13-03194-08	JENNY(VACANT) HURO	1677 SPRING GARDEN CT		45.71	4
DISBURSEMENT --	Liens From: MC - MISC	To: 400-0000-117-1010 - ALLOW FOR UNCO...	10.71		
	CA - COLLECTIONS ADMIN FEE	001-0000-117-1010 - ALLOW FOR UNCO...	35.00		
13-04652-11	MICHAEL A JOHNSON JR	1501 HAMMOCK DR #A		95.38	9
DISBURSEMENT --	Liens From: 57 - SEWER	To: 400-0000-117-1010 - ALLOW FOR UNCO...	25.44		
	CA - COLLECTIONS ADMIN FEE	001-0000-117-1010 - ALLOW FOR UNCO...	35.00		
	47 - REFUSE BULK	495-0000-117-1010 - ALLOW FOR UNCO...	23.01		
	07 - WATER	400-0000-117-1010 - ALLOW FOR UNCO...	11.93		

Attachment: FY23 Uncollectible Account Adjustments (4258 : Uncollectible Utility Account Adjustments FY2023)

13-06484-15	STEVE BERDEGUEZ	606 WALKER ST		48.59	
DISBURSEMENT --	Liens From: TX - TX	To: 001-0000-117-1010 - ALLOW FOR UNCO...	0.62		
	CA - COLLECTIONS ADMIN FEE	001-0000-117-1010 - ALLOW FOR UNCO...	35.00		
	1R - RENEW AND REPLACE WATER	407-0000-117-1010 - ALLOW FOR UNCO...	6.20		
	3R - RENEW AND REPLACE SEWER	407-0000-117-1010 - ALLOW FOR UNCO...	6.20		
	PN - PENALTY	400-0000-117-1010 - ALLOW FOR UNCO...	0.57		
13-06500-02	SARAH J WALKER (VACANT)	616 WALKER ST		45.50	4
DISBURSEMENT --	Liens From: TX - TX	To: 001-0000-117-1010 - ALLOW FOR UNCO...	0.50		
	CA - COLLECTIONS ADMIN FEE	001-0000-117-1010 - ALLOW FOR UNCO...	35.00		
	1R - RENEW AND REPLACE WATER	407-0000-117-1010 - ALLOW FOR UNCO...	5.00		
	3R - RENEW AND REPLACE SEWER	407-0000-117-1010 - ALLOW FOR UNCO...	5.00		
13-06802-02	TROPICAL PARADISE PROP(VCT)	629 ALICE ST		40.04	4
DISBURSEMENT --	Liens From: TX - TX	To: 001-0000-117-1010 - ALLOW FOR UNCO...	0.24		
	CA - COLLECTIONS ADMIN FEE	001-0000-117-1010 - ALLOW FOR UNCO...	35.00		
	1R - RENEW AND REPLACE WATER	407-0000-117-1010 - ALLOW FOR UNCO...	2.40		
	3R - RENEW AND REPLACE SEWER	407-0000-117-1010 - ALLOW FOR UNCO...	2.40		
13-07094-01	LINCARE, INC	1607 N NOVA RD #B		65.33	6
DISBURSEMENT --	Liens From: CA - COLLECTIONS ADMIN FEE	To: 001-0000-117-1010 - ALLOW FOR UNCO...	35.00		
	CC - DELINQUENT ACCOUNT FEE	400-0000-117-1010 - ALLOW FOR UNCO...	25.00		
	52 - SEWER COMMERCIAL	400-0000-117-1010 - ALLOW FOR UNCO...	5.33		
13-07716-07	INNOVATION HOUSING SOLUTIONS	107 CAMINO CIR		86.34	8
DISBURSEMENT --	Liens From: 67 - SEWER OUTSIDE	To: 400-0000-117-1010 - ALLOW FOR UNCO...	11.00		
	CA - COLLECTIONS ADMIN FEE	001-0000-117-1010 - ALLOW FOR UNCO...	35.00		
	17 - WATER,OUTSIDE,RES	400-0000-117-1010 - ALLOW FOR UNCO...	9.58		
	CC - DELINQUENT ACCOUNT FEE	400-0000-117-1010 - ALLOW FOR UNCO...	27.00		
	2R - RENEW AND REPLACE WATER	407-0000-117-1010 - ALLOW FOR UNCO...	1.88		
	4R - RENEW AND REPLACE SEWER	407-0000-117-1010 - ALLOW FOR UNCO...	1.88		
13-07722-03	MATTHEW SHARP	110 CAMINO CIR		41.33	4
DISBURSEMENT --	Liens From: 67 - SEWER OUTSIDE	To: 400-0000-117-1010 - ALLOW FOR UNCO...	6.33		
	CA - COLLECTIONS ADMIN FEE	001-0000-117-1010 - ALLOW FOR UNCO...	35.00		
13-10784-10	BURCH (VACANT) THOMAS MICHAEL	1591 ANNISTON AVE		41.72	4
DISBURSEMENT --	Liens From: TX - TX	To: 001-0000-117-1010 - ALLOW FOR UNCO...	0.32		
	CA - COLLECTIONS ADMIN FEE	001-0000-117-1010 - ALLOW FOR UNCO...	35.00		
	1R - RENEW AND REPLACE WATER	407-0000-117-1010 - ALLOW FOR UNCO...	3.20		
	3R - RENEW AND REPLACE SEWER	407-0000-117-1010 - ALLOW FOR UNCO...	3.20		
13-10808-13	GEORGE DENNIS FRANKLIN	1622 ANNISTON AVE		45.23	4
DISBURSEMENT --	Liens From: CA - COLLECTIONS ADMIN FEE	To: 001-0000-117-1010 - ALLOW FOR UNCO...	35.00		
	47 - REFUSE BULK	495-0000-117-1010 - ALLOW FOR UNCO...	10.23		
13-14172-11	WILLIAM RYALS	1572 MEGAN BAY CIR		53.12	5
DISBURSEMENT --	Liens From: CA - COLLECTIONS ADMIN FEE	To: 001-0000-117-1010 - ALLOW FOR UNCO...	35.00		
	CC - DELINQUENT ACCOUNT FEE	400-0000-117-1010 - ALLOW FOR UNCO...	18.12		
13-14594-06	TIJUANA ORR	944 15TH ST #202		43.19	4
DISBURSEMENT --	Liens From: 57 - SEWER	To: 400-0000-117-1010 - ALLOW FOR UNCO...	5.87		
	CA - COLLECTIONS ADMIN FEE	001-0000-117-1010 - ALLOW FOR UNCO...	35.00		
	07 - WATER	400-0000-117-1010 - ALLOW FOR UNCO...	2.32		
13-14602-12	JAMES DALE THOMPSON	946 15TH ST #101		84.71	8
DISBURSEMENT --	Liens From: 57 - SEWER	To: 400-0000-117-1010 - ALLOW FOR UNCO...	10.13		
	CA - COLLECTIONS ADMIN FEE	001-0000-117-1010 - ALLOW FOR UNCO...	35.00		
	CC - DELINQUENT ACCOUNT FEE	400-0000-117-1010 - ALLOW FOR UNCO...	25.00		
	PN - PENALTY	400-0000-117-1010 - ALLOW FOR UNCO...	14.58		
13-15462-03	APRIL TUITE	1186 ALABAMA AVE		57.34	5
DISBURSEMENT --	Liens From: CA - COLLECTIONS ADMIN FEE	To: 001-0000-117-1010 - ALLOW FOR UNCO...	35.00		
	17 - WATER,OUTSIDE,RES	400-0000-117-1010 - ALLOW FOR UNCO...	22.34		

** NOTE: The Current Acct. Balance does not include pending payments.

Totals: 25,55

Lien Summar

Move from Revenue Code	Move to Revenue Code or GL Account	Total Amount
CF - COLLECTIONS AGENCY %	001-0000-117-1010 - ALLOW FOR UNCOLL ACCTS	0.64
42 - REFUSE	495-0000-117-1010 - ALLOW FOR UNCOLL ACCTS	1268.13
41 - REFUSE	495-0000-117-1010 - ALLOW FOR UNCOLL ACCTS	1452.93

Attachment: FY23 Uncollectible Account Adjustments (4258 : Uncollectible Utility Account Adjustments FY2023)

3R - RENEW AND REPLACE SEWER	407-0000-117-1010 - ALLOW FOR UNCOLL ACCTS	574.09
4R - RENEW AND REPLACE SEWER	407-0000-117-1010 - ALLOW FOR UNCOLL ACCTS	1.88
2R - RENEW AND REPLACE WATER	407-0000-117-1010 - ALLOW FOR UNCOLL ACCTS	1.88
1R - RENEW AND REPLACE WATER	407-0000-117-1010 - ALLOW FOR UNCOLL ACCTS	573.50
PN - PENALTY	400-0000-117-1010 - ALLOW FOR UNCOLL ACCTS	3239.52
02 - WATER INSIDE COMMER	400-0000-117-1010 - ALLOW FOR UNCOLL ACCTS	139.09
07 - WATER	400-0000-117-1010 - ALLOW FOR UNCOLL ACCTS	2390.21
06 - WATER INSIDE MH	400-0000-117-1010 - ALLOW FOR UNCOLL ACCTS	30.11
47 - REFUSE BULK	495-0000-117-1010 - ALLOW FOR UNCOLL ACCTS	641.54
52 - SEWER COMMERCIAL	400-0000-117-1010 - ALLOW FOR UNCOLL ACCTS	499.61
CC - DELINQUENT ACCOUNT FEE	400-0000-117-1010 - ALLOW FOR UNCOLL ACCTS	450.22
56 - SEWER MOBILE HOME	400-0000-117-1010 - ALLOW FOR UNCOLL ACCTS	35.71
17 - WATER,OUTSIDE,RES	400-0000-117-1010 - ALLOW FOR UNCOLL ACCTS	31.92
22 - IRRIG INSIDE COMMER	400-0000-117-1010 - ALLOW FOR UNCOLL ACCTS	723.37
57 - SEWER	400-0000-117-1010 - ALLOW FOR UNCOLL ACCTS	2349.33
MC - MISC	400-0000-117-1010 - ALLOW FOR UNCOLL ACCTS	136.05
51 - SEWER	400-0000-117-1010 - ALLOW FOR UNCOLL ACCTS	11.39
67 - SEWER OUTSIDE	400-0000-117-1010 - ALLOW FOR UNCOLL ACCTS	17.33
CA - COLLECTIONS ADMIN FEE	001-0000-117-1010 - ALLOW FOR UNCOLL ACCTS	3457.65
TX - TX	001-0000-117-1010 - ALLOW FOR UNCOLL ACCTS	298.84
01 - WATER INSIDE APT	400-0000-117-1010 - ALLOW FOR UNCOLL ACCTS	8.68
RF - REFUSE	495-0000-117-1010 - ALLOW FOR UNCOLL ACCTS	7225.38
	Total:	25559.00

General Ledger Distributio

GL Posting Date: 09/20/202

Fund	Account Number	Account Description	Total Amount	IFT
001 - GENERAL FUND				
	001-0000-115-1010	ACCOUNTS RECEIVABLE	-3458.29	
	001-0000-115-1045	ACCOUNTS RECEIVABLE / WATER UTILI	-298.84	
	001-0000-117-1010	ALLOW FOR UNCOLL ACCTS	3757.13	
		Fund Total:	0.00	
400 - WATER & SEWER FUND				
	400-0000-115-1010	ACCOUNTS RECEIVABLE	-10062.54	
	400-0000-117-1010	ALLOW FOR UNCOLL ACCTS	10062.54	
		Fund Total:	0.00	
407 - PROPRIETARY R&R FUND				
	407-0000-115-1010	ACCOUNTS RECEIVABLE	-1151.35	
	407-0000-117-1010	ALLOW FOR UNCOLL ACCTS	1151.35	
		Fund Total:	0.00	
495 - SOLID WASTE ENTERPRISE				
	495-0000-115-1010	ACCOUNTS RECEIVABLE	-10587.98	
	495-0000-117-1010	ALLOW FOR UNCOLL ACCTS	10587.98	
		Fund Total:	0.00	
		Distribution Total:	0.00	

Attachment: FY23 Uncollectible Account Adjustments (4258 : Uncollectible Utility Account Adjustments FY2023)

HOLLY HILL
FLORIDA

STAFF REPORT
CITY OF HOLLY HILL, FLORIDA

City Commission
Agenda Item

MEETING DATE:	**September 26, 2023**
FROM:	**Brian Walker**
SUBJECT:	**Request that the City Commission Determine Whether or Not a Nuisance Exist at 1625 Anniston Avenue, and If So, Determine What Course of Action Should be Taken**
NUMBER:	**(ID # 4243)**
APPLICANT:	**City of Holly Hill**
PLANNER:	**Brian Walker**

DISCUSSION

The purpose of this agenda item is for staff to request that the City Commission determine whether or not a nuisance exist at 1625 Anniston Avenue, and if so, determine what course of action should be taken.

Chapter 26, Section 26-61 of the Holly Hill Code, titled Special items declared a nuisance, provides a list of items that are declared to be and constitute a nuisance. These include items such as the accumulation of trash and debris, and storage of junk, as well as other items. Section 26-62 states that it is unlawful for any person to create a nuisance, or suffer or permit a nuisance to exist, upon property which is under their care, custody or control. **(Exhibit A - Sections 26-61 and 26-62)**

It is staff's position that the property known as 1625 Anniston Avenue, has a long history of accumulating trash and debris, meeting the definition of a nuisance, and that the property owner has created the nuisance, and permitted the nuisance to continue.

HISTORY

The property was first cited for sanitary nuisances on 12/17/2008. Through the years the property has received numerous Notices of Violation (NOV) related to junk, clutter, untagged and inoperable trailers and vehicles being stored on the property, and for conditions that provide harborage for rats, snakes, and other wildlife. The last NOV was issued on April 4, 2023. **(Exhibit B - Notices of Violation)**

Sample photographs of the property are attached and document the appearance of the property over a span of 10 years. They are titled by the dates taken and labeled as follows:

Pictures taken 02-03-13
Pictures taken 08-28-13
Pictures taken 12-21-22
Pictures taken 04-05-23

Pictures taken 09-14-23

The pictures demonstrate that although items have come and gone from the property, there has consistently been clutter and junk at varying degrees and that at no time during this span, has the property been in compliance with the City's regulations with regard to junk and clutter on a property.

The property owner has been taken before the Special Magistrate numerous times for violations related to junk, clutter, debris, scrapping and inoperable vehicles on the property, and found to be in violation. For example, some of the dates that the property has been taken before the Special Magistrate for trash, debris and junk related items, are as follows:

July 26, 2013 - storage of junk, litter and trash, harborage for vermin
August 28, 2013 - storage of junk, litter and trash, harborage for vermin
August 26, 2015 - untagged boats, trailers and inoperable vehicles
September 23, 2015- untagged boats, trailers and inoperable vehicles
January 19, 2023 - conducting a scrapping business on the property, junk and debris
April 20, 2023 - Trash, junk debris, scrapping business, and received permission from the Special Magistrate (pending ruling of same by the City Commission) to enter the property and to remove all items declared a nuisance under Section 26-61, at the owner's expense.
(Exhibit C - Magistrate Orders and Related Recorded Liens)

Through the years, the homeowner has repeatedly stated that she would clean up the property. In her case notes of October 16, 2012, Code Enforcement Officer, C. Towne, documented that Ms. Hammond stated she was getting a shed permit to place items into, in an effort to clean up the yard. Yet the property was not brought into compliance.

The Special Magistrate recorded in the write up of the meeting on January 19, 2023 that homeowner (Ms. Hammond) "advised that she will have assistance this upcoming week to help clear all the trash, scrap and debris from the property." This would have meant that the property would have been cleaned up by the end of January 2023. At another meeting of the Special Magistrate on April 20th, 2023, the Special Master recorded in her write up that Ms. Hammond, testified "that she is in the process of getting help in cleaning up her property." And on other occasions, Ms. Hammond has spoken with staff and verbally committed to cleaning up the property. The property was not cleaned up.

Through the years, the Special Master has accessed accumulating fines for multiple violations related to the storage of junk, litter and trash and scrapping. Because the accumulating fines have not encouraged the homeowner to remove the trash and junk, they eventually became liens on the property. As of September 14, 2023, the liens total $873,900 **(Exhibit D)**. The property is homesteaded and not eligible to be foreclosed upon. This means that the nuisance of clutter and junk and scrapping, could potentially remain on the property for many years to come.

Staff has spent many hours working to encouraging the homeowner to clean up the property. Complaints about the property have been responded to, numerous visits to the property have been made, notices of violation issued, paperwork and documentation created, discussions held with the property owner, scheduling appearances before the Special Magistrate, filing of liens,

and so on, have cost many staff hours.

The City's latest effort to encourage the property owner to come into compliance, consisted of writing and sending a certified letter on August 31st, 2023, to Sherri Hammond, the homeowner, as well as to the property's mortgage holder. The letter is attached as **Exhibit E**, and was also posted and hand delivered to the property owner on September 14, 2023. The letter provided the homeowner additional time to remove the nuisance, and advised that if the nuisance continued, staff would be bringing the issue to the City Commission in accordance with Ordinance 3059 which was adopted on February 14, 2023, in order for the Commission to decide as to whether or not a nuisance exist and if so, what if any action should be taken.

Ordinance 3059 allows the City Commission to make a finding with regard to whether or not a nuisance exist. If the Commission finds that a nuisance exists, it must allow the homeowner additional time to bring the property into compliance. If the homeowner fails to do so by the specified time, the Ordinance allows the Commission to authorize City employees, subcontractors, and/or agents, to enter the property and remove all items declared a nuisance.

Given the long history of the homeowner's failure to remove the nuisance of junk, clutter, debris and scrapping on the property, despite repeated efforts by staff, liens, and orders of the Special Magistrate over a period of 10 years, staff request the following in accordance with Ordinance 3059:

1. That based on the evidence submitted, the Commission make a finding that a nuisance exists, and has been allowed to exist for many years in violation of Section 26-61 and 26-62.
2. That the Commission give the homeowner no more than 30 days from the date of this meeting, to remove the nuisance based on Section 26-61, to the City's satisfaction in accordance with the Code.
3. That if the homeowner fails to remove the nuisance by October 26th, 2023, the Commission authorize City employees, subcontractors, and/or agents, to enter the property and remove all items declared a nuisance in accordance with Section 26-61, and to further authorize that all expenses incurred by the City for removal of such items be paid by the property owner, and that if the property owner fails to pay such cost and expenses, that they be recorded as a lien on the property, or if such expenses qualify, that they be added to the property's non-ad valorem portion of the property tax bill.

- EXHIBIT A - Sections 26-61 and 62 (PDF)
- Exhibit B - Notices of Violation (PDF)
- Exhibit C - Magistrate Orders and Related Liens (PDF)
- Exhibit D - Lien Amounts (PDF)
- Exhibit E - Correspondence / Letter (PDF)
- Pictures taken 2-3-2013 (PDF)
- Pictures taken 8-28-13 (PDF)
- Pictures Taken on 12-21-22 (PDF)
- Pictures Taken 4-5-23 (PDF)

- Pictures - 9-14-23 (PDF)
- Aerial (PDF)
- Sec. 26-61. Special items declared a nuisance. (PDF)
- Ordinance 3059 - Amending Chapter 3 Code Enforcement - Abate Nuisance (PDF)

EXHIBIT A

Sec. 26-61. Special items declared a nuisance.

The maintaining, using, placing, depositing, leaving or permitting to be or remain on any public or private property of any of the following items, conditions or actions are hereby declared to be and constitute a nuisance:

(1) Any weeds such as broom grass, jimson, burdock, ragweed, sandspur or other similar weeds; or any other vegetation, other than trees, ornamental bushes, flowers or other ornamental plants with a height exceeding 12 inches;

(2) Accumulation of trash, litter, debris, garbage, bottles, paper, cans, rags, dead or decayed fish, fowl, meat or other animal matter; fruit, vegetables, offal, bricks, concrete, scrap lumber or other building debris or other refuse of any nature;

(3) Any condition which provides harborage for rats, mice, snakes and other vermin;

(4) Any building or other structure which is in such a dilapidated condition that it is unfit for human habitation, or kept in such an insanitary condition that it is a menace to the health of people residing in the vicinity thereof, or presents a more than ordinarily dangerous fire hazard in the vicinity where it is located;

(5) All unnecessary or unauthorized noises and annoying vibrations, including animal noises;

(6) All disagreeable or obnoxious odors and stenches, as well as the conditions, substances or other causes which give rise to the emission or generation of such odors and stenches;

(7) The carcasses of animals or fowl not disposed of within a reasonable time after death;

(8) The pollution of any public well or cistern, stream, lake, canal or body of water by sewage, dead animals, creamery wastes, industrial wastes or other substances;

(9) Any building, structure or other place or location where any activity which is in violation of local, state or federal law is conducted, performed or maintained;

(10) Any accumulation of stagnant water permitted or maintained on any lot or piece of ground;

(11) The storage or accumulation of junk in any area zoned for residential use;

(12) Any act resulting in the discharge, dumping, or disposal of any contents of any septic tank, dry well, raw sewage, grease or similar material, regardless of its source, into or upon any land or body of water within the city, except as may be allowed through the city's sewer system or as otherwise authorized by section 70-173;

(13) Improperly built or maintained septic tanks, water closets, or privies;

(14) Any act by which the health or life of any individual may be threatened or impaired, or by which or through which, directly or indirectly, disease may be caused;

(15) Any method for disposing of the contents of any septic tank, dry well, raw sewage, grease or similar material which has not been approved by the county health department or state department of health and rehabilitative services;

(16) Improper maintenance or operation of any vehicle designed or used for the transportation or disposal of the contents of any septic tank, dry well, raw sewage, grease, or similar material, which may threaten or impair the health or lives of any individual, or by which or through which, directly or indirectly, disease may be caused.

(Code 1984, § 18-1)

Sec. 26-62. Prohibited.

It shall be unlawful for any person to create a nuisance, or suffer or permit a nuisance to exist, upon property which is under his care, custody or control.

(Code 1984, § 18-2)

Attachment: EXHIBIT A - Sections 26-61 and 62 (4243 : 1625 Anniston Avenue Nuisance Abatement)

VIOLATION NOTICE
CODE ENFORCEMENT DEPARTMENT
CITY OF HOLLY HILL
(386) 248-9483

NAME Sherri W. Hammond DATE 10-16-12

ADDRESS 1625 Anniston

PHONE NO _____ TIME 1238

YOU ARE HEREBY FOUND TO BE IN VIOLATION OF CITY ORDINANCE SECTION(S) INDICATED BELOW ON PROPERTY OWNED OR CONTROLLED BY YOU:

☒ **Parking or Storage of Vehicles**
114-792(a)
It shall be unlawful to park or store a motor vehicle on any public street or on any residentially zoned property with the City of Holly Hill, if said motor vehicle does not have displayed thereon, a current motor vehicle license plate. This paragraph shall not apply to vehicles stored within an enclosed garage or carport or similar structure.

☐ **Commercial Vehicles, Trailers, and Equipment**
114-793
It shall be unlawful to park commercial vehicles, trailers, and equipment on any residentially zoned property within the City of Holly Hill unless it meets the criteria of the Code of Ordinances.

☐ **Parking and Storage of Boats, Recreational Vehicles**
114-791 (a)
In residential zoning districts, boats and RVEs in excess of 18 feet in length may only be parked in an enclosed building in the rear yard or the side yard behind a line extending across the front face of an existing building.

☒ **Keeping and Storing of Dismantled, Non-operative Machinery, Vehicles, Boats, Scrap Metal or Junk**
114-811
No person shall keep, store or allow to remain on any property within the City of Holly Hill, any dismantled, partially dismantled, non-operative, or discarded machinery, vehicles, boats or parts thereof, scrap metal or junk.

☐ **License required: Registration Fee Required**
62-27
No person shall engage in or manage any business, profession or occupation within the city, unless and until a license shall have been procured from the City clerk-City manager and the payment of the amount of license tax required therefor and as provided in this article.

☐ **Building Permit Required**
82-131
No development activity may be undertaken without prior authorization by a building permit.

☒ **Sanitary Nuisances**
26-61

Sec. 1 ☐ Grass and weeds in excess of 12 inches in height.
Sec. 2 ☒ Accumulation of trash, litter, debris, building debris, bricks concrete, scrap lumber or other refuse of any nature.
Sec. 3 ☒ Any condition which provides harborage for rats, mice, snakes and other vermin.
Sec. 5 ☐ All unnecessary or unauthorized noises and annoying vibrations including animal noises.
Sec. 10 ☐ Any accumulation of stagnant water.
Sec. 11 ☒ Storage or accumulation of junk in any area zoned for residential use

☐ **Other** CLUTTER & JUNK
Ordinance Section # _____

Entire Yard full. - Construction Material - windows/Doors
tarps over couch, trailers of debris (2)
Untagged - Non operative Autos Boats - trailers of debris

FAILURE TO COMPLY WILL RESULT AS INDICATED BELOW:

☒ Mandatory appearance before the Special Master with possible fines of up to $500 per day.
☐ Vehicle being towed at the owner's expense.
☒ City abating nuisance which will result in a lien being placed on your property for cost of same.
☐ Other _____

YOU HAVE (10) 10-26-12 DAYS FROM RECEIPT OF THIS NOTICE TO COMPLY WITH SAID ORDINANCE AND CAUSE ALL CORRECTIONS TO BE MADE.

IF YOU WISH TO DISPUTE THIS VIOLATION YOU ARE ENTITLED TO A HEARING BEFORE A SPECIAL MASTER. HOWEVER, IF YOU FAIL TO CORRECT THIS VIOLATION WITHIN THE ALLOTTED TIME FRAME, UNLESS GIVEN AN EXTENSION BY THE CITY OF HOLLY HILL, YOU WILL BE SCHEDULED FOR A MANDATORY APPEARANCE BEFORE A SPECIAL MASTER. FAILURE TO APPEAR AS SCHEDULED WILL BE DEEMED AN ADMISSION OF GUILT AND THE APPROPRIATE PENALTIES WILL BE IMPOSED. ONCE FOUND GUILTY OF A VIOLATION, REPEAT VIOLATIONS ARE SUBJECT TO SHORTER COMPLIANCE TIMES AND DOUBLED PENALTIES. TO REQUEST A HEARING CONTACT (386) 248-9483.

RECEIVED BY: POSTED ON DOOR ENFORCEMENT OFFICER: Cherie Towne HH215

City of Holly Hill , 1065 Ridgewood Ave., Holly Hill, FL 32117.

Attachment: Exhibit B - Notices of Violation (4243 : 1625 Anniston Avenue Nuisance Abatement)

VIOLATION NOTICE
CODE ENFORCEMENT DEPARTMENT
CITY OF HOLLY HILL
(386) 248-9483

NAME Sherri Hammond DATE 3/18/13

ADDRESS 1625 ANNISTON

PHONE NO _____ TIME 1234

YOU ARE HEREBY FOUND TO BE IN VIOLATION OF CITY ORDINANCE SECTION(S) INDICATED BELOW ON PROPERTY OWNED OR CONTROLLED BY YOU:

☒ **Parking or Storage of Vehicles**
114-792(a)
It shall be unlawful to park or store a motor vehicle on any public street or on any residentially zoned property with the City of Holly Hill, if said motor vehicle does not have displayed thereon, a current motor vehicle license plate. This paragraph shall not apply to vehicles stored within an enclosed garage or carport or similar structure.

☐ **Commercial Vehicles, Trailers, and Equipment**
114-793
It shall be unlawful to park commercial vehicles, trailers, and equipment on any residentially zoned property within the City of Holly Hill unless it meets the criteria of the Code of Ordinances.

☐ **Parking and Storage of Boats, Recreational Vehicles**
114-791 (a)
In residential zoning districts, boats and RVEs in excess of 18 feet in length may only be parked in an enclosed building in the rear yard or the side yard behind a line extending across the front face of an existing building.

☒ **Keeping and Storing of Dismantled, Non-operative Machinery, Vehicles, Boats, Scrap Metal or Junk**
114-811
No person shall keep, store or allow to remain on any property within the City of Holly Hill, any dismantled, partially dismantled, non-operative, or discarded machinery, vehicles, boats or parts thereof, scrap metal or junk.

☐ **License required: Registration Fee Required**
62-27
No person shall engage in or manage any business, profession or occupation within the city, unless and until a license shall have been procured from the City clerk-City manager and the payment of the amount of license tax required therefor and as provided in this article.

☐ **Building Permit Required**
82-131
No development activity may be undertaken without prior authorization by a building permit.

☒ **Sanitary Nuisances**
26-61

Sec. 1 ☐ Grass and weeds in excess of 12 inches in height.

Sec. 2 ☒ Accumulation of trash, litter, debris, building debris, bricks concrete, scrap lumber or other refuse of any nature.

Sec. 3 ☒ Any condition which provides harborage for rats, mice, snakes and other vermin.

Sec. 5 ☐ All unnecessary or unauthorized noises and annoying vibrations including animal noises.

Sec. 10 ☐ Any accumulation of stagnant water.

Sec. 11 ☒ Storage or accumulation of junk in any area zoned for residential use

☐ **Other**
Ordinance Section # _____

CLUTTER
2 AUTOS IN BACKYARD
2 BOATS
trailer untagged full of d
Scrap Metal
Building debris - wood etc.

FAILURE TO COMPLY WILL RESULT AS INDICATED BELOW:

☒ Mandatory appearance before the Special Master with possible fines of up to $500 per day.
SPECIAL MAGISTR
HEARING WILL BE
APRIL 21 at 1:00

☐ Vehicle being towed at the owner's expense.

☒ City abating nuisance which will result in a lien being placed on your property for cost of same.

☐ Other _____

YOU HAVE (5) Five DAYS FROM RECEIPT OF THIS NOTICE TO COMPLY WITH SAID ORDINANCE AND CAUSE ALL CORRECTIONS TO BE MADE.

IF YOU WISH TO DISPUTE THIS VIOLATION YOU ARE ENTITLED TO A HEARING BEFORE A SPECIAL MASTER. HOWEVER, IF YOU FAIL TO CORRECT THIS VIOLATION WITHIN THE ALLOTTED TIME FRAME, UNLESS GIVEN AN EXTENSION BY THE CITY OF HOLLY HILL, YOU WILL BE SCHEDULED FOR A MANDATORY APPEARANCE BEFORE A SPECIAL MASTER. FAILURE TO APPEAR AS SCHEDULED WILL BE DEEMED AN ADMISSION OF GUILT AND THE APPROPRIATE PENALTIES WILL BE IMPOSED. ONCE FOUND GUILTY OF A VIOLATION, REPEAT VIOLATIONS ARE SUBJECT TO SHORTER COMPLIANCE TIMES AND DOUBLED PENALTIES. TO REQUEST A HEARING CONTACT (386) 248-9483.

RECEIVED BY: Posted on door ENFORCEMENT OFFICER: Cherie Towne HH21

City of Holly Hill , 1065 Ridgewood Ave., Holly Hill, FL 32117.

This has been going on since Oct. 16 w/only s ment's done. Not in compliance.

Attachment: Exhibit B - Notices of Violation (4243 : 1625 Anniston Avenue Nuisance Abatement)

H LY HILL POLICE DEPARTMEI

CODE ENFORCEMENT CITATION/VIOLATION NOTICE
CITY OF HOLLY HILL
1065 RIDGEWOOD AVE HOLLY HILL FL 32117
(386) 248-9483

1013847

NAME: Sherri Hammond PHONE #: _____

ADDRESS: 1625 Anniston

DATE VIOLATION 1ST OBSERVED: ~~6/8/15~~ 5/22/15 TIME VIOLATION 1ST OBSERVED: _____

YOU ARE HEREBY FOUND TO BE IN VIOLATION OF CITY ORDINANCE SECTION(s) INDICATED BELOW ON PROPERTY OWNED OR CONTROLLED BY YOU:

☒ **Parking or Storage of Vehicles (Class I)** 3 boats
114-792(a)
It shall be unlawful to park or store a motor vehicle on any public street or on any residentially zoned property with the City of Holly Hill, if said motor vehicle does not have displayed thereon, a current motor vehicle license plate. This paragraph shall not apply to vehicles stored within an enclosed garage or carport or similar structure.

☐ **Commercial Vehicles, Trailer, and Equipment (Class I)**
114-793
It shall be unlawful to park commercial vehicles, trailers, and equipment on any residentially zoned property within In the City of Holly Hill unless it meets the criteria of the Code of Ordinances.

☒ **Parking or Storage of Boats, Recreational Vehicles (Class I)** 3 boats
114-791 (a)
In residential zoning districts, boats, and RVEs in excess of 18 feet in length may only be parked in an enclosed building in the rear yard or the side yard behind a line extending across the front face of an existing building.

☒ **Keeping and Storing of Dismantled, Non-operative Machinery, Vehicles, Boats, Scrap Metal or Junk (Class I)**
114-811
No person shall keep, store, or allow to remain on any property within the City of Holly Hill, any dismantled, partially dismantled, non-operative, or discarded machinery, vehicles, boats or parts thereof, scrap metal or junk.

☐ **Building Permit Required (Class II)**
82-131
No development activity may be undertaken without prior authorization by a building permit.

☐ **License Required: Registration Fee Required (Class II)**
62-27
No person shall engage in or manage any business, profession or occupation within the City of Holly Hill, unless and until a license shall have been procured from the City Clerk-City Manager and the payment of the amount of license tax required therefor and as provided in this article.

☒ **Sanitary Nuisances (Class I)**
26-61
- ☐ Sec. 1 Grass and weeds in excess of 12 inches in height
- ☒ Sec. 2 Accumulation of trash, litter, debris, building debris, bricks, concrete, scrap lumber, or other refuse of any nature
- ☒ Sec. 3 Any condition which provides harborage for rats, mice, snakes, and other vermin.
- ☐ Sec. 5 All unnecessary or unauthorized noises and annoying vibrations, including animal noises.
- ☐ Sec. 10 Any accumulation of stagnant water.
- ☒ Sec. 11 Storage or accumulation of junk in any area zoned for residential use.

☐ **Animals Running at Large (Class II)**
10-36
Any person who owns, keeps or harbors any animal shall not permit such animal to run at large in the city.

☐ **Other:**
Ordinance Section #: _____ Class# _____

_____
_____
_____

☐ FIRST TIME VIOLATION ☒ REPEAT VIOLATION PREVIOUS CASE#: _____ Utilitie trailer ofo street

Facts constituting reasonable cause:
2 untagged autos- 3 boats - Clutter - debris

CORRECTIVE ACTION NEEDED:
All items need to have current tags and operate or be removed.

It is the responsibility of the person cited to contact the city for an inspection when the violation is corrected. The violation will be deemed to be in existence until the code enforcement officer determines that the violation has been corrected.

FAILURE TO COMPLY WILL RESULT AS INDICATED BELOW:

☐ Vehicle being towed at the owner's expense.

☒ City abating nuisance which will result in a lien being placed on your property for cost of same.

☒ Mandatory appearance before the Special Master with possible fines of up to $500 per day.

Hearing Date: July 29 Time: 1300 Address: City Hall, Commission Chambers, 1065 Ridgewood Ave, Holly Hill FL 32117

YOU HAVE 10 DAYS FROM RECEIPT OF THIS NOTICE TO COMPLY WITH SAID ORDINANCE AND CAUSE ALL CORRECTIONS TO BE MADE.

APPLICABLE CIVIL FINE: _____

This citation is issued pursuant to Article III, Code Enforcement, of Chapter 2, Administration, of the City of Holly Hill Code of Ordinances. The violation for which you are charged is a civil infraction. Your signature below does not constitute an admission of guilt.

Upon receipt of this citation you must within (10) days pay the applicable fine indicated above. You can contest this citation by appearing at the special master hearing at the date and time indicated above. This citation will be referred to the special master for further action unless the violation is corrected and the fine paid within the time periods provided. The special master has the legal authority to levy a per day fine from the date the violation was first observed. Payment of the fine amount will be deemed an admission that the violation exists. If you fail to pay the fine OR fail to correct the violation AND fail to appear at the special master hearing, you will be deemed to have waived your right to contest the violation or fine amount. The maximum fine the special master can levy is two hundred and fifty dollars per day ($250.00/day) for the first time violation and five hundred dollars per day ($500.00/Day) for repeat violations.

RECEIVED BY: Sherri Hammond

ENFORCEMENT OFFICER: Cherie Towne HH215 Date of Issuance: 7/7/15 Time of Issuance: 1145
ADDRESS: 1065 RIDGEWOOD AVE HOLLY HILL FL 32117 386-248-9483

WHITE – RECORDS YELLOW – INDIVIDUAL

Attachment: Exhibit B - Notices of Violation (4243 : 1625 Anniston Avenue Nuisance Abatement)

HOLLY HILL
FLORIDA

City of Holly Hill, 1065 Ridgewood Avenue, Holly Hill, FL. 32117 (386)248-9433

NOTICE OF VIOLATION / NOTICE TO APPEAR

Date: October 31, 2022 **Case Number:** 23-00002728

HAMMOND SHERRI W
1625 ANNISTON AVENUE
HOLLY HILL, FL 32117

Violation Location: 1625 ANNISTON AVE
Parcel ID: 4 2 42 22 15 0180
Property Owner: HAMMOND SHERRI W
Date of Violation(s): October 31, 2022
Violation(s) of Land Development Code / Code of Ordinances:

Violation Detail
00010 62-27 (a)(b) BUSINESS TAX RECEIPT
Date Est: October 31, 2022 Location: Qty: 001

Violation Text
10/31/2022, 11:24:19 AM HLLHKXM
All businesses must have a valid and current business tax receipt through the city.

Violation Description
No person shall engage in or manage any business, profession or occupation in the city, unless and until a receipt shall

Attachment: Exhibit B - Notices of Violation (4243 : 1625 Anniston Avenue Nuisance Abatement)

It is the responsibility of the persons cited to contact the City for an inspection when the violation(s) are corrected. The violation(s) will be deemed to be in existence until the Code Enforcement Officer determines that the violation(s) has been corrected.

FAILURE TO COMPLY WILL RESULT AS INDICATED BELOW:

Applicable Fine:

Mandatory appearance before the Special Master with possible fines of up to $500.00 per day.

Hearing Date: 11/17/2022 Time: 1:00 PM Address: City Hall, Commission Chambers, 1065 Ridgewood Ave., Holly Hill, FL. 32117.

City abating nuisance which will result in a lien being placed on the property for the actual cost of services provided.

This citation is issued pursuant to Division III, Code Enforcement, Chapter 2, Administration, of the City of Holly Hill Code of Ordinances. These violations for which you are charged are civil infractions. Your signature below does not constitute an admission of guilt. Refusing to sign this notice does not relinquish your responsibility for the listed violations.

Upon receipt of this violation/citation you must, within (15) days, pay the applicable civil fine indicated above or within the specified time period, contest the violation or fine by filing a request for specoal master hearing. Any person that receives a citation may contest the citation by filing a written request for hearing providing the written request to the City of Holly Hill Code Enforcement Division within 15 calendar days from the citation issue date. If you elect to pay the applicable civil fine, it will be deemed an admission of the violation. If you fail to pay the appicable civil fine as indicated AND fail to appear at the hearing on the date provided above. You shall be deemed to have waived your right to contest the violation and the Special Master may enter an Order imposing a civil fine up to maximum of two hundred and fifty dollars per day ($250.00) for the first violation and five hundred dollars ($500.00/Day) for a repeat violation.

_____ _____

Received By Date/Time

_____ _____

Code Enforcement Officer Date/Time

Attachment: Exhibit B - Notices of Violation (4243 : 1625 Anniston Avenue Nuisance Abatement)

HOLLY HILL
FLORIDA

City of Holly Hill, 1065 Ridgewood Avenue, Holly Hill, FL. 32117 (386)248-9433

NOTICE OF VIOLATION / NOTICE TO APPEAR

Date: November 15, 2022 **Case Number:** 23-00002728

HAMMOND SHERRI W
1625 ANNISTON AVENUE
HOLLY HILL, FL 32117

Violation Location: 1625 ANNISTON AVE
Parcel ID: 4 2 42 22 15 0180
Property Owner: HAMMOND SHERRI W
Date of Violation(s): October 31, 2022
Violation(s) of Land Development Code / Code of Ordinances:

Violation Detail
00010 62-27 (a)(b) BUSINESS TAX RECEIPT
Date Est: October 31, 2022 Location: Qty: 001

Violation Text
10/31/2022, 11:24:19 AM HLLHKXM
All businesses must have a valid and current business tax receipt through the city.

Violation Description
No person shall engage in or manage any business, profession

Attachment: Exhibit B - Notices of Violation (4243 : 1625 Anniston Avenue Nuisance Abatement)

It is the responsibility of the persons cited to contact the City for an inspection when the violation(s) are corrected. The violation(s) will be deemed to be in existence until the Code Enforcement Officer determines that the violation(s) has been corrected.

FAILURE TO COMPLY WILL RESULT AS INDICATED BELOW:

Applicable Fine:

Mandatory appearance before the Special Master with possible fines of up to $500.00 per day.

Hearing Date: 12/15/2022 Time: 1:00 PM Address: City Hall, Commission Chambers, 1065 Ridgewood Ave., Holly Hill, FL. 32117.

City abating nuisance which will result in a lien being placed on the property for the actual cost of services provided.

This citation is issued pursuant to Division III, Code Enforcement, Chapter 2, Administration, of the City of Holly Hill Code of Ordinances. These violations for which you are charged are civil infractions. Your signature below does not constitute an admission of guilt. Refusing to sign this notice does not relinquish your responsibility for the listed violations.

Upon receipt of this violation/citation you must, within (15) days, pay the applicable civil fine indicated above or within the specified time period, contest the violation or fine by filing a request for specoal master hearing. Any person that receives a citation may contest the citation by filing a written request for hearing providing the written request to the City of Holly Hill Code Enforcement Division within 15 calendar days from the citation issue date. If you elect to pay the applicable civil fine, it will be deemed an admission of the violation. If you fail to pay the appicable civil fine as indicated AND fail to appear at the hearing on the date provided above. You shall be deemed to have waived your right to contest the violation and the Special Master may enter an Order imposing a civil fine up to maximum of two hundred and fifty dollars per day ($250.00) for the first violation and five hundred dollars ($500.00/Day) for a repeat violation.

_____ _____

Received By Date/Time

_____ _____

Code Enforcement Officer Date/Time

Attachment: Exhibit B - Notices of Violation (4243 : 1625 Anniston Avenue Nuisance Abatement)

HOLLY HILL
FLORIDA

CITY OF HOLLY HILL
1065 Ridgewood Avenue Holly Hill, Florida 32117
(386) 248-9433

NOTICE TO APPEAR

Date: January 4, 2023 **Case Number:** 23-00002728

HAMMOND SHERRI W
1625 ANNISTON AVENUE
HOLLY HILL, FL 32117

Violation Location: 1625 ANNISTON AVE
Parcel ID: 4 2 42 22 15 0180
Property Owner: HAMMOND SHERRI W
Date of Violation(s): October 31, 2022
Violation(s) of Land Development Code / Code of Ordinances:

Violation Detail
00010 62-27 (a)(b) BUSINESS TAX RECEIPT
Date Est: October 31, 2022 Location: Qty: 001

Violation Text
10/31/2022, 11:24:19 AM HLLHKXM
All businesses must have a valid and current business tax receipt through the city.

Violation Description
No person shall engage in or manage any business, profession or occupation in the city, unless and until a receipt shall have been procured from the city manager and the payment of the amount of license tax required therefor and as provided in this article.
(

Attachment: Exhibit B - Notices of Violation (4243 : 1625 Anniston Avenue Nuisance Abatement)

HOLLY HILL
FLORIDA

CITY OF HOLLY HILL
1065 Ridgewood Avenue Holly Hill, Florida 32117
(386) 248-9433

Please call before your hearing date – (386)248-9433
Hearing Date: January 19, 2023
Hearing Time: 1:00pm
Hearing Location: Holly Hill City Hall, 1065 Ridgewood Avenue, Municipal Court Room

Attention: Person(s) with Disabilities:
If you are a person with a disability who needs any accommodation in order to participate in this proceeding, you are entitled, at no cost to you, to the provision of certain assistance.

Code Enforcement Officer :
Kyle Mahanes
386-2489483
kmahanes@hollyhillfl.org

Cc: Special Master
File
Post

Attachment: Exhibit B - Notices of Violation (4243 : 1625 Anniston Avenue Nuisance Abatement)

HOLLY HILL
FLORIDA

CITY OF HOLLY HILL
1065 Ridgewood Avenue Holly Hill, Florida 32117
(386) 248-9433

NOTICE TO APPEAR

Date: April 4, 2023 **Case Number:** 23-00002728

HAMMOND SHERRI W
1625 ANNISTON AVENUE
HOLLY HILL, FL 32117

Violation Location: 1625 ANNISTON AVE
Parcel ID: 4 2 42 22 15 0180
Property Owner: HAMMOND SHERRI W
Date of Violation(s): October 31, 2022
Violation(s) of Land Development Code / Code of Ordinances:

Violation Detail
00020 114-33(2) ZONING
Date Est: October 31, 2022 Location: Qty: 001

Violation Text
10/31/2022, 11:26:09 AM HLLHKXM
Scrapping and other storage related businesses may not be operated out of a residentially zoned area.
You must remove the business and all associated material, equipment, vehicles, and scrap from this residential area immediately and relocate it to a suitably zoned site.

Violation Description
(2) Interpretation of permitted uses and structures. A requested use or structure that is not expressly permitted in a classification shall be prohibited in that

Attachment: Exhibit B - Notices of Violation (4243 : 1625 Anniston Avenue Nuisance Abatement)

HOLLY HILL
FLORIDA

CITY OF HOLLY HILL
1065 Ridgewood Avenue Holly Hill, Florida 32117
(386) 248-9433

Hearing Date: April 20, 2023
Hearing Time: 1:00pm
Hearing Location: Holly Hill City Hall, 1065 Ridgewood Avenue, Municipal Court Room

Attention: Person(s) with Disabilities:
If you are a person with a disability who needs any accommodation in order to participate in this proceeding, you are entitled, at no cost to you, to the provision of certain assistance.

Code Enforcement Officer :
Kyle Mahanes
386-2489483
kmahanes@hollyhillfl.org

Cc: Special Master
File
Post

Attachment: Exhibit B - Notices of Violation (4243 : 1625 Anniston Avenue Nuisance Abatement)

Instrument# 2014-066172 # 2
Book: 6978
Page: 4627

CITY OF HOLLY HILL CODE ENFORCEMENT
SPECIAL MASTER HEARING
HOLLY HILL FLORIDA

City of Holly Hill, a Political Sub-division of the State of Florida

Parcel No. 42-14-32-22-15-0180
Case No. 427940

-vs-

Sherri Hammond (Owner's)

Respondent(s),

ORDER NON- COMPLIANCE

The Holly Hill Code Enforcement Special Magistrate has heard testimony under oath at a hearing on the above styled case on the 26th day of July, 2013, and based on the evidence received, the Special Magistrate, thereupon issues its FINDING OF FACT, CONCLUSIONS OF LAW, AND ORDER as follows:

FINDINGS OF FACT

That the Respondent(s), owner(s) of property located at 1625 Anniston Ave., Holly Hill 32117 has been cited for 26-61 2 Trash Litter Garbage, 26-61 3 Harborage for Vermin, 26-61 11 Junk and 82-0131 No permit fence wall installed. The Respondent was found in non-compliance for all of the above.

CONCLUSIONS OF LAW

The Respondent(s) was found in non-compliance 26-61 2 Trash Litter Garbage, 26-61 3 Harborage for Vermin, 26-61 11 Junk and 82-0131 No permit fence wall installed

ORDER

Based on the foregoing Findings of Fact and Conclusions of Law, and the authority of Chapter 162, Florida Statutes and the Holly Hill Code Enforcement Ordinance, Chapter 2 Section 2-116, it is duly ORDERED by this Special Magistrate that the Respondent(s) shall pay an administrative fine of two hundred and fifty ($250.00) dollars, which if not paid in ninety days from the date of this order shall be recorded as a lien and such recordation shall constitute a lien against the Respondent's real (except homestead) and personal property in Volusia County Florida, said property to include, but not necessarily limited to that described above

Respondent has until August 28th 2013 hearing to bring the property into compliance. At that time it will be determined if any additional fines will be imposed. The Respondent was noticed in open court of the next court date.

Attachment: Exhibit C - Magistrate Orders and Related Liens (4243 : 1625 Anniston Avenue Nuisance Abatement)

The Respondent must notify the Code Enforcement Officer, Jason Weiss, when this order is complied with. Until the Code Enforcement Officer verifies the property is in compliance the fine will continue to accrue. This order will be recorded in the Official Records of the Office of the Clerk of the Court in Volusia County, Florida, and such recordation shall constitute a lien against the Respondent's real (except homestead) and personal property in Volusia County Florida, said property to include, but not necessarily limited to that described above

DONE AND ORDERED this 7 day of August 2013, at Holly Hill County of Volusia, Florida.

CITY OF HOLLY HILL
CODE ENFORCEMENT

By, John A. Pascucci
John A. Pascucci, Special Magistrate

Attest: OFC J. WEISS #217
Code Enforcement Official

This instrument prepared by John A. Pascucci, Special Magistrate for the Code Enforcement, 1065 Ridgewood Avenue, Holly Hill, Florida 32117, Telephone number: (386) 248-9490

Attachment: Exhibit C - Magistrate Orders and Related Liens (4243 : 1625 Anniston Avenue Nuisance Abatement)

Instrument# 2014-066172 # 4
Book: 6978
Page: 4629
Diane M. Matousek
Volusia County, Clerk of Court

CERTIFICATE OF SERVICE

I HEREBY CERTIFY that on 7 day of August 2013 a true and accurate copy of the foregoing has been furnished by U.S. Mail to:

1. Ms. Sherri Hammond
   1625 Anniston Ave.
   Holly Hill, Florida 32117

ORC J. Weiss # 217
Code Enforcement Official

IMPORTANT NOTICE

The Respondent must notify the Code Enforcement Officer, Jason Weiss, when this order is complied with. Until the Code Enforcement Officer verifies the property is in compliance the fine will continue to accrue. This order will be recorded in the Official Records of the Office of the Clerk of the Court in Volusia County, Florida, and such recordation shall constitute a lien against the Respondent's real and personal property in Volusia County Florida, said property to include, but not necessarily limited to that described above (EXCEPT HOMESTEAD)

The Respondent has the right to appeal whether the property is in compliance. The Respondent must file their appeal for a hearing within 20 days from the date the fine goes into effect. If the property is found to be still in non-compliance the fine will begin on the original date the fine was to go into effect. This hearing will only cover whether the property is now in compliance. It will not be a rehearing of the whole case which was previously ruled on.

Attachment: Exhibit C - Magistrate Orders and Related Liens (4243 : 1625 Anniston Avenue Nuisance Abatement)

Return To: (Enclose Self Addressed Envelope	
Name:	Kurt Swartzlander
Address:	1065 Ridgewwod Avenue
	Holly Hill, FL 32117
This instrument Prepared by:	
Name:	Kurt Swartzlander
Address:	1065 Ridgewood Avenue
	Holly Hill, FL 32117
Property Appraisers Parcel ID Number(s): 4242-22-15-0180	

04/15/2014 01:17 PM
Instrument# 2014-066172
Book: 6978
Page: 4626

7.5.c

Claim of Lien

State of Florida, County of Volusia

Before me, the undersigned Notary Public, personally appeared Kurt Swatzlander, Finance Director
Who was duly sworn and says he/she is(the lienor herein) (the agent herein)

City of Holly Hill
(Lienor's Name)

whose address is 1065 Ridgewood Ave, Holly Hill, Florida 32117
(Lienor's Address)

And in accordance with a service with Hammond Sherri W
Lienor furnished labor, services or materials consisting of: (Describe specially fabricated materials separately)
Administration fine $250.00

on the following described real property in Volusia County, Florida:
(Describe real property sufficiently for identification, including street and number, if known)
LOT 17 EXC S 24 FT & LOT 18 EXC N 13 FT BLK 15 FLOMICH GARDE
NS SEC HOLLY HILL HTS PER OR 1999 PG 0099 PER OR 5342 PGS 00
1625 Anniston Ave Holly Hill, FL 32117

owned by Hammond Sherri W

of a total value of Two Hundred Fifty Dollars ($250.00)
of which remains unpaid as of first notified of the items on April 8, 2014.

OKALEA CIRCELLI
NOTARY PUBLIC
STATE OF FLORIDA
Comm# EE114396
Expires 7/20/2015

Lienor: City of Holly Hill

By _____ (Agent)

Print Name: Kurt Swartzlander

Sworn to and subscribed before me this 10 day of April 2014

_____
Notary Public

Attachment: Exhibit C - Magistrate Orders and Related Liens (4243 : 1625 Anniston Avenue Nuisance Abatement)

Instrument# 2014-066170 # 2
Book: 6978
Page: 4620

CITY OF HOLLY HILL CODE ENFORCEMENT
SPECIAL MAGISTRATE'S HEARING
HOLLY HILL FLORIDA

City of Holly Hill, a Political Sub-division of the State of Florida
Petitioner,

-vs-

Sherri Hammond Owner(s)
Respondent(s),

Parcel No. 42-14-32-22-15-0180
Case No. 427940

ORDER OF NON-COMPLIANCE

The Holly Hill Code Enforcement Special Magistrate has heard testimony under oath at a hearing on the above styled case on the 28th day of August 2013, and based on the evidence received, the Special Magistrate, thereupon issues its FINDING OF FACT, CONCLUSIONS OF LAW, AND ORDER as follows:

FINDINGS OF FACT

That the Respondent(s), owner(s) of property located at 1625 Anniston Ave. Holly Hill 32117 has been cited for 82-131 No permit fence and wall installed, 26-61, (2) Trash and litter, 26-61 (3) Any condition which provides harborage for rates mice snakes and other vermin, and 26-61 (11) Junk stored in residential property.

CONCLUSIONS OF LAW

That the Respondent(s) are in violation of Holy Hill Zoning and Ordinances: Violation, 82-131 No permit fence and wall installed, 26-61 (2) Trash and litter, 26-61 (3) Any condition which provides harborage for rates mice snakes and other vermin and 26-61 (11) Junk stored in a residential property.

ORDER

Based on the foregoing Findings of Fact and Conclusions of Law, and the authority of Chapter 162, Florida Statutes and the Holly Hill Code Enforcement Ordinance, Chapter 2 Section 2-116, it is duly ORDERED by this Special Magistrate Based on the foregoing Findings of Fact and Conclusions of Law, and the authority of Chapter 162, Florida Statutes and the Holly Hill Code Enforcement Ordinance, Chapter 2 Section 2-116, it is duly ORDERED by this Special Magistrate that the Respondent(s) shall pay an administrative fine of two hundred and fifty ($250.00) dollars, ordered at the last hearing. which if not paid in ninety days from the date of the last order it shall be recorded as a lien and such recordation shall constitute a lien against the Respondent's real (except

Attachment: Exhibit C - Magistrate Orders and Related Liens (4243 : 1625 Anniston Avenue Nuisance Abatement)

Instrument# 2014-066170 # 2
Book: 6978
Page: 4621
Diane M. Matousek
Volusia County, Clerk of Court

homestead) and personal property in Volusia County Florida, said property to include, but not necessarily limited to that described above.

The violation 82-131No permit fence and wall installed are not brought into compliance in ten (10) days from the date of this order a fine of thirty ($30.00) dollars a day for each and every day the violation continues to exist.

If the violation 26-61(2) litter and trash are not brought into compliance in ten (10) days from the date of this order a fine of thirty ($30.00) dollars a day for each and every day the violation continues to exist.

If the violation 26-61(3) harborage for vermin are not brought into compliance in ten (10) days from the date of this order a fine of Thirty ($30.00) dollars a day for each and every day the violation continues to exist.

If the violation 26-61(11) junk stored residential property are not brought into compliance in ten (10) days from the date of this order a fine of Thirty ($30.00) dollars a day for each and every day the violation continues to exist.

DONE AND ORDERED this 06 day of September 2013, at Holly Hill County of Volusia, Florida.

CITY OF HOLLY HILL
CODE ENFORCEMENT

By, John A Pascucci
John A. Pascucci, Special Magistrate

Attest: ORC J. WEISS
Code Enforcement Official

This instrument prepared by John A. Pascucci, Special Magistrate for the Code Enforcement, 1065 Ridgewood Avenue, Holly Hill, Florida 32117, Telephone number: (386) 248-9490.

CERTIFICATE OF SERVICE

I HEREBY CERTIFY that on 06 day of September, 2013 a true and accurate copy of the foregoing has been furnished by U.S. Mail to:

1. Ms. Sherry Hammond
   1625 Anniston Ave.
   Holly Hill, Florida 32117

ORC J. WEISS
Code Enforcement Official

Attachment: Exhibit C - Magistrate Orders and Related Liens (4243 : 1625 Anniston Avenue Nuisance Abatement)

IMPORTANT NOTICE

The Respondent must notify the Code Enforcement Officer, Jason Weiss, when this order is complied with. Until the Code Enforcement Officer verifies the property is in compliance the fine will continue to accrue. This order will be recorded in the Official Records of the Office of the Clerk of the Court in Volusia County, Florida, and such recordation shall constitute a lien against the Respondent's real and personal property in Volusia County Florida, said property to include, but not necessarily limited to that described above (EXCEPT HOMESTEAD)

The Respondent has the right to appeal whether the property is in compliance. The Respondent must file their appeal for a hearing within 20 days from the date the fine goes into effect. If the property is found to be still in non-compliance the fine will begin on the original date the fine was to go into effect. This hearing will only cover whether the property is now in compliance. It will not be a rehearing of the whole case which was previously ruled on.

Attachment: Exhibit C - Magistrate Orders and Related Liens (4243 : 1625 Anniston Avenue Nuisance Abatement)

Return To: (Enclose Self Addressed Envelope	
Name:	Kurt Swartzlander
Address:	1065 Ridgewwod Avenue
	Holly Hill, FL 32117
This instrument Prepared by:	
Name:	Kurt Swartzlander
Address:	1065 Ridgewood Avenue
	Holly Hill, FL 32117
Property Appraisers Parcel ID Number(s): 4242-22-15-0180	

04/15/2014 01:17 PM
Instrument# 2014-06617(
Book: 6978
Page: 4619

7.5.c

Claim of Lien

State of Florida, County of Volusia

Before me, the undersigned Notary Public, personally appeared Kurt Swatzlander, Finance Director
Who was duly sworn and says he/she is(the lienor herein) (the agent herein)

City of Holly Hill
(Lienor's Name)

whose address is 1065 Ridgewood Ave, Holly Hill, Florida 32117
(Lienor's Address)

And in accordance with a service with Hammond Sherri W
Lienor furnished labor, services or materials consisting of: (Describe specially fabricated materials separately)
Install fence without permits $30.00 a day. Litter & trash $30.00 a day. Harborage for vermin $30.00 a day. Junk stored on residential property $30.00 a day Beginning on September 12, 2013.

on the following described real property in Volusia County, Florida:
(Describe real property sufficiently for identification, including street and number, if known)
LOT 17 EXC S 24 FT & LOT 18 EXC N 13 FT BLK 15 FLOMICH GARDE
NS SEC HOLLY HILL HTS PER OR 1999 PG 0099 PER OR 5342 PGS 00
1625 Anniston Ave Holly Hill, FL 32117

owned by Hammond Sherri W

of a total value of One Hundred Twenty Dollars a day ($120.00) until property comes into compliance which remains unpaid as of April 8, 2014.

OKALEA CIRCELLI
NOTARY PUBLIC
STATE OF FLORIDA
Comm# EE114396
Expires 7/20/2015

Lienor: City of Holly Hill
By _____ (Agent)
Print Name: Kurt Swartzlander

Sworn to and subscribed before me this 10 day of April 2014

_____
Notary Public

Attachment: Exhibit C - Magistrate Orders and Related Liens (4243 : 1625 Anniston Avenue Nuisance Abatement)

CITY OF HOLLY HILL CODE ENFORCEMENT
SPECIAL MAGISTRATE HEARING
HOLLY HILL, FLORIDA

City of Holly Hill, a Political Sub-division of the State of Florida

Petitioner,

-vs-

Sherri Hammond, Owner(s)
Respondent(s),

Parcel No. 42-14-32-22-15-0180

Case No. 1013847

ORDER OF NON-COMPLIANCE

The Holly Hill Code Enforcement Special Magistrate has heard testimony under oath at a hearing on the above styled case on the 26th day of August, 2015 and the 23rd of September 2015 and based on the evidence received, the Special Magistrate, thereupon issues its FINDING OF FACT, CONCLUSIONS OF LAW, AND ORDER as follows:

FINDINGS OF FACT

That the Respondent(s), Owner(s) of the property located at 1625 Anniston Street, Holly Hill, Florida 32117 has been noticed on or about the 22nd of May, 2015 and in June of 2015 for the following violations 114-792(a) – It shall be unlawful to park or store a motor vehicle on any public street or on any residentially zoned property within the city if the motor vehicle does not have displayed thereon both a current motor vehicle license plate and an unexpired inspection sticker, if applicable to the motor vehicle.; and 114-811(a) - No person shall keep, store or allow to remain on any property within the city any dismantled, partially dismantled, nonoperative or discarded machinery, vehicles, boats or parts thereof, scrap metal or junk except as provided in this section.

At the hearing held on the 26th day of August, 2015, the testimony and evidence of the Holly Hill Code Enforcement Officer confirm that four boats and one inoperable motor vehicle were stored on the property. At that hearing, the Officer testified that three of the boats remained untagged. Additionally, the Officer stated that no more than 2 boats could be stored outdoors on any one residential property in accordance with 114-791(g). The Respondent appeared and advised that she is currently working to resolve all the violations. The Respondent was granted 30 days to correct all violations.

At the hearing held on the 23rd of September 2015, the Respondent did not appear at the hearing. The Code Enforcement Officer advised that three boats remained unlicensed, one non-operable truck remains on the property unlicensed and a trailer without a license was also found on the property. Additionally, the Code Enforcement Officer reiterated that no more than two boats are permitted to be left outdoors on any residential property.

Attachment: Exhibit C - Magistrate Orders and Related Liens (4243 : 1625 Anniston Avenue Nuisance Abatement)

CONCLUSIONS OF LAW

That the Respondent(s), Owner(s) of property located at 1625 Anniston Street, Holly Hill, Florida 32117 is in violation of one (1) count of 114-792(a) – It shall be unlawful to park or store a motor vehicle on any public street or on any residentially zoned property within the city if the motor vehicle does not have displayed thereon both a current motor vehicle license plate and an unexpired inspection sticker, if applicable to the motor vehicle. The unlicensed and untagged vehicle has remained on the property through every hearing and remains uncorrected.

That the Respondent(s), Owner(s) of property located at 1625 Anniston Street, Holly Hill, Florida 32117 is in violation four (4) counts of 114-811(a) - No person shall keep, store or allow to remain on any property within the city any dismantled, partially dismantled, nonoperative or discarded machinery, vehicles, boats or parts thereof, scrap metal or junk except as provided in this section. The inoperable vehicle and three boats remain on the property and have not been removed or repaired to rectify this issue. Additionally, the three boats remain untagged or licensed.

That the Respondent(s), Owner(s) of property located at 1625 Anniston Street, Holly Hill, Florida 32117 is in violation of one (1) count of 114-791(g) - No more than two items which are either boats or RVEs may be parked outdoors (including within a structure which is not fully enclosed) at any one residential property. There are currently four boats and a trailer on the property in violation of this ordinance.

ORDER

Based on the foregoing Findings of Fact and Conclusions of Law, and the authority of Chapter 162, Florida Statutes and the Holly Hill Code Enforcement Ordinance, Chapter 2 Section 2-116, it is duly ORDERED by this Special Magistrate that the Respondent(s) pay an administrative fine of two hundred and fifty ($250.00) dollars, which if not paid in ninety (90) days from the date of this order shall be recorded as a lien and such recordation shall constitute a lien against the Respondent's real (except homestead) and personal property in Volusia County Florida, said property to include, but not necessarily limited to that described above.

If violation of 114-792(a) – It shall be unlawful to park or store a motor vehicle on any public street or on any residentially zoned property within the city if the motor vehicle does not have displayed thereon both a current motor vehicle license plate and an unexpired inspection sticker, if applicable to the motor vehicle is not brought into compliance in five (5) days from the date of this order a fine of twenty-five ($25.00) dollars a day for each and every day the violation continues to exist.

If the violation of four (4) counts of 114-811(a) - No person shall keep, store or allow to remain on any property within the city any dismantled, partially dismantled, nonoperative or discarded machinery, vehicles, boats or parts thereof, scrap metal or junk except as

Attachment: Exhibit C - Magistrate Orders and Related Liens (4243 : 1625 Anniston Avenue Nuisance Abatement)

provided in this section is not brought into compliance in five (5) days from the date of this order a fine of twenty-five ($25.00) dollars per count, per day for each and every day the violation continues to exist.

If the violation of 114-791(g) - No more than two items which are either boats or RVEs may be parked outdoors (including within a structure which is not fully enclosed) at any one residential property is not brought into compliance in five (5) days from the date of this order a fine of twenty-five ($25.00) dollars per day for each and every day the violation continues to exist.

DONE AND ORDERED this 29th day of September, 2015, at Holly Hill, County of Volusia, Florida.

CITY OF HOLLY HILL
CODE ENFORCEMENT

By, Melody Pullen
Melody Pullen, Special Magistrate

Attest: Scott D Marquez
Code Enforcement Official

This instrument prepared by Melody Pullen, Special Magistrate for the Code Enforcement, 1065 Ridgewood Avenue, Holly Hill, Florida 32117, Telephone number: (386) 248-9490.

CERTIFICATE OF SERVICE

I HEREBY CERTIFY that on 30th day of September, 2015 a true and accurate copy of the foregoing has been furnished by U.S. Mail to:

Sherri Hammond
1625 Anniston Street
Holly Hill, FL 32117

Scott D Marquez
Code Enforcement Official

Attachment: Exhibit C - Magistrate Orders and Related Liens (4243 : 1625 Anniston Avenue Nuisance Abatement)

Return To:	
Name:	Jonathan McKinney
Address:	1065 Ridgewood Ave
	Holly Hill, FL 32117
This Instrument Prepared by:	
Name:	Darryl Pierce
Address:	1065 Ridgewood Ave
	Holly Hill, FL 32117
Property Appraisers Parcel ID Number(s):	4242-22-15-0180

Claim of Lien

State of Florida, County of Volusia

Before me, the undersigned Notary Public, personally appeared Jonathan McKinney, Finance Director
Who was duly sworn and says he/she is(the lienor herein) (the agent herein)
City of Holly Hill
(Lienor's Name)

whose address is 1065 Ridgewood Ave, Holly Hill, Florida 32117
(Lienor's Address)

And in accordance with a service with Sherri W Hammond
Lienor furnished labor, services or materials consisting of: (Describe specially fabricated materials separately)
Special Magistrate Administrative Hearing Fine of $250.00, ordered on September 29, 2015. Special Master Administration Fine of $25.00 per day, per violation against this property. The six sited violations have not been corrected; the property has not come into compliance. $25.00 per day fine, per violation commencing on October 5, 2015.

on the following described real property in Volusia County, Florida: (Describe real property sufficiently for identification, including street and number, if known)
LOT 17 EXC S 24 FT & LOT 18 EXC N 13 FT BLK 15 FLOMICH GARDENS SEC HOLLY HILL HTS PER OR 1999 PG 0099 PER OR 5342 PGS [redacted] PER OR 5421 PGS [redacted] INC PER D/C 6685 PG 2331

1625 Anniston Avenue Holly Hill, FL 32117

owned by with Sherri W Hammond

of a total value of One Hundred Fifty Dollars ($150.00) per day for property code violations, commencing on October 5, 2015. In addition a Two Hundred Fifty Dollar ($250.00) Special Magistrate Hearing Fine; both fines which remain unpaid as of November 5, 2018.

Okalea Circelli
NOTARY PUBLIC
STATE OF FLORIDA
Comm# FF235031
Expires [redacted]

Lienor/City of Holly Hill
By _____ (Agent)
Print Name: Jonathan McKinney

Sworn to and subscribed before me this 5th day of November 2018.

Notary Public

Attachment: Exhibit C - Magistrate Orders and Related Liens (4243 : 1625 Anniston Avenue Nuisance Abatement)

CITY OF HOLLY HILL CODE ENFORCEMENT
SPECIAL MAGISTRATE HEARING
HOLLY HILL, FLORIDA

City of Holly Hill, a Political
Sub-division of the State of Florida

Petitioner,

-vs-

Sherri W. Hammond, Owner

Respondent.

Parcel No. 4242-2215-0180
Case No. 23-2728

ORDER OF NON-COMPLIANCE

The City of Holly Hill Code Enforcement Special Magistrate has heard testimony under oath at a hearing on the above styled case on the 19th of January, 2023, and based on the evidence received, the Special Magistrate, thereupon issues its FINDINGS OF FACT, CONCLUSIONS OF LAW, AND ORDER as follows:

FINDINGS OF FACT

That Sherri W. Hammond, Owner and Respondent of the property located at 1625 Anniston Avenue, Holly Hill, FL 32117 was issued a Notice of Violation on the 31st of October, 2022 and a Notice to Appear on the 4th of January, 2023 for the violation of Section 62-27 - Required; delinquency penalty. (a) No person shall engage in or manage any business, profession or occupation in the city, unless and until a receipt shall have been procured from the city manager and the payment of the amount of license tax required therefor and as provided in this article. (b) Any person who shall carry on, conduct or manage any business, occupation or profession for which a receipt is required under this article without having first obtained such a receipt shall be subject to a penalty of 25 percent of the receipt determined to be due and Section 114-33(2) - Interpretation of permitted uses and structures. A requested use or structure that is not expressly permitted in a classification shall be prohibited in that classification.

At the hearing, the Code Enforcement Officer Mahanes provided evidence through photographs and testimony that the Respondent is engaging in a scrapping business without paying a business license tax, and in a zone that is not authorized to conduct this type of business. The City of Holly Hill has offered to provide a dumpster to the Owner, at the Owner's expense. The cost of the dumpster shall be recorded as a lien on the property. The Owner of the property appeared at the hearing and advised that she will have assistance this upcoming week to help clear all the trash, scrap and debris from the property.

Attachment: Exhibit C - Magistrate Orders and Related Liens (4243 : 1625 Anniston Avenue Nuisance Abatement)

CONCLUSIONS OF LAW

That the Owner and Respondent of the property located at 1625 Anniston Avenue, Holly Hill, FL 32117 is in violation of Holly Hill Zoning and Ordinances: Section 62-27 - Required; delinquency penalty. (a) No person shall engage in or manage any business, profession or occupation in the city, unless and until a receipt shall have been procured from the city manager and the payment of the amount of license tax required therefor and as provided in this article. (b) Any person who shall carry on, conduct or manage any business, occupation or profession for which a receipt is required under this article without having first obtained such a receipt shall be subject to a penalty of 25 percent of the receipt determined to be due and Section 114-33(2) - Interpretation of permitted uses and structures. A requested use or structure that is not expressly permitted in a classification shall be prohibited in that classification.

ORDER

Based on the foregoing Findings of Fact and Conclusions of Law, and the authority of Chapter 162, Florida Statutes and the Holly Hill Code Enforcement Ordinance, Chapter 2 Section 2-118, it is duly ORDERED by this Special Magistrate that the Respondent shall pay an administrative fine of two hundred fifty dollars ($250.00), which if not paid in ninety (90) days from the date of this order shall be recorded as a lien and such recordation shall constitute a lien against the Respondent's real (except homestead) and personal property in Volusia County, Florida, said property to include, but not necessarily limited to that described above.

The Respondent must bring all the violations listed above into compliance within fifteen (15) days of this Order. Failure to comply with this deadline shall result in a daily fine, per violation. The Respondent shall be required to pay a fine of fifty dollars ($50.00) a day, PER VIOLATION until the property comes into compliance.

Any repeat violations within five (5) years of this order shall result in enhanced fines and fees.

DONE AND ORDERED this 25th day of January 2023, in Holly Hill, County of Volusia, Florida.

CITY OF HOLLY HILL
CODE ENFORCEMENT

By, _____
Melody Pullen, Special Magistrate

Attest: _____
Code Enforcement Official

This instrument prepared by Melody Pullen, Special Magistrate for the Code Enforcement, 1065 Ridgewood Avenue, Holly Hill, Florida 32117, Telephone number: (386) 248-9490.

Attachment: Exhibit C - Magistrate Orders and Related Liens (4243 : 1625 Anniston Avenue Nuisance Abatement)

CERTIFICATE OF SERVICE

I HEREBY CERTIFY that on _____day of _____, 2023 a true and accurate copy of the foregoing has been furnished by U.S. Mail to:

Sherri W. Hammond
1625 Anniston Avenue
Holly Hill, FL 32117

_____
Code Enforcement Official

IMPORTANT NOTICE

The Respondent must notify the Code Enforcement Officer, when this order is complied with. Until the Code Enforcement Officer verifies the property is in compliance the fine will continue to accrue. This order will be recorded in the Official Records of the Office of the Clerk of the Court in Volusia County, Florida, and such recordation shall constitute a lien against the Respondent's real and personal property in Volusia County, Florida, said property to include, but not necessarily limited to that described above (EXCEPT HOMESTEAD)

The Respondent has the right to appeal whether the property is in compliance. The Respondent must file their appeal for a hearing within 20 days from the date the fine goes into effect. If the property is found to be still in non-compliance the fine will begin on the original date the fine was to go into effect. This hearing will only cover whether the property is now in compliance. It will not be a rehearing of the whole case which was previously ruled on.

Attachment: Exhibit C - Magistrate Orders and Related Liens (4243 : 1625 Anniston Avenue Nuisance Abatement)

CITY OF HOLLY HILL CODE ENFORCEMENT
SPECIAL MAGISTRATE HEARING
HOLLY HILL, FLORIDA

City of Holly Hill, a Political Sub-division of the State of Florida

Petitioner,

-vs-

Sherri W. Hammond, Owner

Respondent.

Parcel No. 4242-2215-0180
Case No. 23-000002728

ORDER OF NON-COMPLIANCE

The City of Holly Hill Code Enforcement Special Magistrate has heard testimony under oath at a hearing on the above styled case on the 20th of April 2023, and based on the evidence received, the Special Magistrate, thereupon issues its FINDINGS OF FACT, CONCLUSIONS OF LAW, AND ORDER as follows:

FINDINGS OF FACT

That Sherri W. Hammond, Owner and Respondent of the property located at 1625 Anniston Avenue, Holly Hill, FL 32117 was issued a Notice of Violation on the 31st of October, 2022 and a Notice to Appear on the 4th of April, 2023 for the violation of Section 26-61 – Special items declared a nuisance. The maintaining, using, placing, depositing, leaving or permitting to be or remain on any public or private property of any of the following items, conditions or actions are hereby declared to be and constitute a nuisance: (2) Accumulation of trash, litter, debris, garbage, bottles, paper, cans, rags, dead or decayed fish, fowl, meat or other animal matter; fruit, vegetables, offal, bricks, concrete, scrap lumber or other building debris or other refuse of any nature; and Section 114-33(2) – Interpretations of permitted uses and structures. A requested use or structure that is not expressly permitted in a classification shall be prohibited in that classification.

At the hearing, the Code Enforcement Officer Mahanes testified that this property has previously been cited for trash and debris accumulation and continues to have these violations. Officer Mahanes provided evidence through photographs and testimony that there continues to be trash and debris all over the property. This property is not zoned, permitted, or authorized to be used as a storage or scrapping facility. The City of Holly Hill continues to receive complaints regarding this property. The City of Holly Hill Code Enforcement is requesting permission (pending a ruling of the same from the City Commissioners) to enter the property to remove all items declared a nuisance under Section 26-61, at the Owner's expense. The Owner was present at the hearing and testified that she is in the process of getting help in cleaning up her property. Although

Attachment: Exhibit C - Magistrate Orders and Related Liens (4243 : 1625 Anniston Avenue Nuisance Abatement)

she has made some progress in removal of some items, the Owner has failed to bring the property into compliance.

CONCLUSIONS OF LAW

That the Owner and Respondent of the property located at 1625 Anniston Avenue, Holly Hill, FL 32117 is in violation of Holly Hill Zoning and Ordinances: Section 26-61 - The maintaining, using, placing, depositing, leaving or permitting to be or remain on any public or private property of any of the following items, conditions or actions are hereby declared to be and constitute a nuisance: (2) Accumulation of trash, litter, debris, garbage, bottles, paper, cans, rags, dead or decayed fish, fowl, meat or other animal matter; fruit, vegetables, offal, bricks, concrete, scrap lumber or other building debris or other refuse of any nature; and Section 114-33(2) – Interpretations of permitted uses and structures. A requested use or structure that is not expressly permitted in a classification shall be prohibited in that classification.

ORDER

Based on the foregoing Findings of Fact and Conclusions of Law, and the authority of Chapter 162, Florida Statutes and the Holly Hill Code Enforcement Ordinance, Chapter 2 Section 2-118, it is duly ORDERED by this Special Magistrate that the Respondent shall pay an administrative fine of two hundred fifty dollars ($250.00), which if not paid in ninety (90) days from the date of this order shall be recorded as a lien and such recordation shall constitute a lien against the Respondent's real (except homestead) and personal property in Volusia County, Florida, said property to include, but not necessarily limited to that described above.

If the Respondent fails to correct all the violations within fourteen (14) days, the City of Holly Hill employees, subcontractors, and/or agents shall be granted permission (pending a ruling of the same from the City Commissioners) to enter the property to remove all items declared a nuisance according to city ordinance Section 26-61. All costs and expenses incurred by the City of Holly Hill for the removal of the items shall be paid by the Owner. If the Owner fails to pay these costs and expenses they shall be recorded as a lien on the property.

Attachment: Exhibit C - Magistrate Orders and Related Liens (4243 : 1625 Anniston Avenue Nuisance Abatement)

Any repeat violations within five (5) years of this order shall result in enhanced fines and fees.

DONE AND ORDERED this 26th day of April 2023, in Holly Hill, County of Volusia, Florida.

CITY OF HOLLY HILL
CODE ENFORCEMENT

By, _____
Melody Pullen, Special Magistrate

Attest: _____
Code Enforcement Official

This instrument prepared by Melody Pullen, Special Magistrate for the Code Enforcement, 1065 Ridgewood Avenue, Holly Hill, Florida 32117, Telephone number: (386) 248-9490.

STATE OF FLORIDA, VOLUSIA COUNTY
I HEREBY CERTIFY the foregoing is a true copy
of the original filed in this office. This 27th, day of April, 2023.

VALERIE MANNING
MY COMMISSION # GG 350523
EXPIRES: October 30, 2023
Bonded Thru Notary Public Underwriters

_____
City Clerk, City of Holly Hill

CERTIFICATE OF SERVICE

I HEREBY CERTIFY that on 27th day of April, 2023 a true and accurate copy of the foregoing has been furnished by U.S. Mail to:

Sherri W. Hammond
1625 Anniston Avenue
Holly Hill, FL 32117

_____
Code Enforcement Official

Attachment: Exhibit C - Magistrate Orders and Related Liens (4243 : 1625 Anniston Avenue Nuisance Abatement)

IMPORTANT NOTICE

The Respondent must notify the Code Enforcement Officer, when this order is complied with. Until the Code Enforcement Officer verifies the property is in compliance the fine will continue to accrue. This order will be recorded in the Official Records of the Office of the Clerk of the Court in Volusia County, Florida, and such recordation shall constitute a lien against the Respondent's real and personal property in Volusia County, Florida, said property to include, but not necessarily limited to that described above (EXCEPT HOMESTEAD)

The Respondent has the right to appeal whether the property is in compliance. The Respondent must file their appeal for a hearing within 20 days from the date the fine goes into effect. If the property is found to be still in non-compliance the fine will begin on the original date the fine was to go into effect. This hearing will only cover whether the property is now in compliance. It will not be a rehearing of the whole case which was previously ruled on.

Attachment: Exhibit C - Magistrate Orders and Related Liens (4243 : 1625 Anniston Avenue Nuisance Abatement)

SM Case # and Hearing Date	Daily Amount	Start Date	Last Date Calculated	# of Days	Total Amount
427940 on Aug. 28, 2013	$120.00	9/16/2013	9/14/2023	3652	**$438,250**
1013847 on Sept. 23, 2015	$150.00	10/5/2015	9/14/2023	2902	**$435,400**
$250 ordered on the dates of 7/26/23 and 8/28/13 and 9/23/15	Special Master Admin Fees				**$750**
					$874,400
See Attached Pages					

Attachment: Exhibit D - Lien Amounts (4243 : 1625 Anniston Avenue Nuisance Abatement)

HOLLY HILL
FLORIDA

Building, Zoning, Licensing & Inspections
386-248-9442
Fax 386-248-9498

City Clerk
386-248-9441
Fax 386-248-9448

City Manager
386-248-9425
Fax 386-248-9448

Community Services
386-248-9435
Fax 386-248-9448

Economic Development
386-248-9444
Fax 386-248-9448

Finance
386-248-9427
Fax 386-248-9497

Human Resources
386-248-9440
Fax 386-248-9448

Information Technology
386-248-9459
Fax 386-248-9448

Public Works
386-248-9463
Fax 386-248-9499

Utility Billing
386-248-9432
Fax 386-248-9458

Mayor & City Commission
386-248-9441
Fax 386-248-9448

Sherri Hammond
1625 Anniston Avenue
Holly Hill, FL 32117

August 31, 2023

NYMT Loan Trust 1
90 Park Avenue, 23rd Floor
New York, NY 10016

Re: Case No: 23-2728

THIS IS AN IMPORTANT LETTER

Dear Ms. Hammond,

On April 20, 2023, the Special Master heard testimony under oath regarding Case # 23-2728. The case concerns the accumulation of trash and debris at your property at 1625 Anniston Avenue, Holly Hill, FL. A copy of the Special Master's signed orders is attached.

You were given until Wednesday, May 10th, 2023, to correct all violations. If the violations were not corrected by that date, the Special Master granted permission for the City to enter your property (pending ruling of same by the City Commission) and remove all items declared a nuisance according to Section 26-61 – Special items declared a nuisance (Attached).

As of the date of this letter, the violations continue to exist. In order to come into compliance, you must do the following: Remove all trash and debris (items declared a nuisance according to Section 26-61) from the property and receive an inspection from a code enforcement official stating that you are in compliance. It is your responsibility to contact the code enforcement division.

You are given until Sunday, September 17, 2023, to correct all violations. On Monday, September 18th, your property will be inspected by a code enforcement official. If it is deemed that the violations have not been corrected in full, your case will be heard before the City Commission on **Tuesday, September 26th, 2023 at 6:00 pm.**

If you do not receive written confirmation on or before Tuesday, September 19th, that you are complaint, then you must attend the hearing on Tuesday, September 26, 2023 at 6:00 pm.

Attachment: Exhibit E - Correspondence / Letter (4243 : 1625 Anniston Avenue Nuisance Abatement)

The purpose of the meeting is for staff to request that the City Commission determine whether or not a public nuisance exists, and if so, and what course of action should be taken, which may include authorizing City employees, subcontractors, and/or agents, to enter your property and remove all items declared a nuisance. If staff is authorized to enter your property to remove all items declared a nuisance, staff will further request that all expenses incurred by the City for removal of such items be paid by the property owner, and that if the property owner fails to pay such cost and expenses, that they be recorded as a lien on the property, or if such expenses qualify, that they be added to the property's non-ad valorem tax portion of the property tax bill.

Questions regarding this letter can be directed to Brian Walker, Community Development Director, at 386-248-9424 or bwalker@hollyhillfl.org. You can also contact your code enforcement officer, Kyle Mahanes at 386-248-9483 or kmahanes@hollyhillfl.org. It is preferable to contact both staff members via email. If you write to one, please copy the other.

Sincerely,

Brian Walker
Community Development Director

Attachment: Exhibit E - Correspondence / Letter (4243 : 1625 Anniston Avenue Nuisance Abatement)

Sec. 26-61. Special items declared a nuisance.

The maintaining, using, placing, depositing, leaving or permitting to be or remain on any public or private property of any of the following items, conditions or actions are hereby declared to be and constitute a nuisance:

(1) Any weeds such as broom grass, jimson, burdock, ragweed, sandspur or other similar weeds; or any other vegetation, other than trees, ornamental bushes, flowers or other ornamental plants with a height exceeding 12 inches;

(2) Accumulation of trash, litter, debris, garbage, bottles, paper, cans, rags, dead or decayed fish, fowl, meat or other animal matter; fruit, vegetables, offal, bricks, concrete, scrap lumber or other building debris or other refuse of any nature;

(3) Any condition which provides harborage for rats, mice, snakes and other vermin;

(4) Any building or other structure which is in such a dilapidated condition that it is unfit for human habitation, or kept in such an insanitary condition that it is a menace to the health of people residing in the vicinity thereof, or presents a more than ordinarily dangerous fire hazard in the vicinity where it is located;

(5) All unnecessary or unauthorized noises and annoying vibrations, including animal noises;

(6) All disagreeable or obnoxious odors and stenches, as well as the conditions, substances or other causes which give rise to the emission or generation of such odors and stenches;

(7) The carcasses of animals or fowl not disposed of within a reasonable time after death;

(8) The pollution of any public well or cistern, stream, lake, canal or body of water by sewage, dead animals, creamery wastes, industrial wastes or other substances;

(9) Any building, structure or other place or location where any activity which is in violation of local, state or federal law is conducted, performed or maintained;

(10) Any accumulation of stagnant water permitted or maintained on any lot or piece of ground;

(11) The storage or accumulation of junk in any area zoned for residential use;

(12) Any act resulting in the discharge, dumping, or disposal of any contents of any septic tank, dry well, raw sewage, grease or similar material, regardless of its source, into or upon any land or body of water within the city, except as may be allowed through the city's sewer system or as otherwise authorized by section 70-173;

(13) Improperly built or maintained septic tanks, water closets, or privies;

(14) Any act by which the health or life of any individual may be threatened or impaired, or by which or through which, directly or indirectly, disease may be caused;

(15) Any method for disposing of the contents of any septic tank, dry well, raw sewage, grease or similar material which has not been approved by the county health department or state department of health and rehabilitative services;

(16) Improper maintenance or operation of any vehicle designed or used for the transportation or disposal of the contents of any septic tank, dry well, raw sewage, grease, or similar material, which may threaten or impair the health or lives of any individual, or by which or through which, directly or indirectly, disease may be caused.

(Code 1984, § 18-1)

Attachment: Exhibit E - Correspondence / Letter (4243 : 1625 Anniston Avenue Nuisance Abatement)

CITY OF HOLLY HILL CODE ENFORCEMENT
SPECIAL MAGISTRATE HEARING
HOLLY HILL, FLORIDA

City of Holly Hill, a Political Sub-division of the State of Florida

Petitioner,

-vs-

Sherri W. Hammond, Owner

Respondent.

Parcel No. 4242-2215-0180
Case No. 23-000002728

ORDER OF NON-COMPLIANCE

The City of Holly Hill Code Enforcement Special Magistrate has heard testimony under oath at a hearing on the above styled case on the 20th of April 2023, and based on the evidence received, the Special Magistrate, thereupon issues its FINDINGS OF FACT, CONCLUSIONS OF LAW, AND ORDER as follows:

FINDINGS OF FACT

That Sherri W. Hammond, Owner and Respondent of the property located at 1625 Anniston Avenue, Holly Hill, FL 32117 was issued a Notice of Violation on the 31st of October, 2022 and a Notice to Appear on the 4th of April, 2023 for the violation of Section 26-61 – Special items declared a nuisance. The maintaining, using, placing, depositing, leaving or permitting to be or remain on any public or private property of any of the following items, conditions or actions are hereby declared to be and constitute a nuisance: (2) Accumulation of trash, litter, debris, garbage, bottles, paper, cans, rags, dead or decayed fish, fowl, meat or other animal matter; fruit, vegetables, offal, bricks, concrete, scrap lumber or other building debris or other refuse of any nature; and Section 114-33(2) – Interpretations of permitted uses and structures. A requested use or structure that is not expressly permitted in a classification shall be prohibited in that classification.

At the hearing, the Code Enforcement Officer Mahanes testified that this property has previously been cited for trash and debris accumulation and continues to have these violations. Officer Mahanes provided evidence through photographs and testimony that there continues to be trash and debris all over the property. This property is not zoned, permitted, or authorized to be used as a storage or scrapping facility. The City of Holly Hill continues to receive complaints regarding this property. The City of Holly Hill Code Enforcement is requesting permission (pending a ruling of the same from the City Commissioners) to enter the property to remove all items declared a nuisance under Section 26-61, at the Owner's expense. The Owner was present at the hearing and testified that she is in the process of getting help in cleaning up her property. Although

Attachment: Exhibit E - Correspondence / Letter (4243 : 1625 Anniston Avenue Nuisance Abatement)

she has made some progress in removal of some items, the Owner has failed to bring the property into compliance.

CONCLUSIONS OF LAW

That the Owner and Respondent of the property located at 1625 Anniston Avenue, Holly Hill, FL 32117 is in violation of Holly Hill Zoning and Ordinances: Section 26-61 - The maintaining, using, placing, depositing, leaving or permitting to be or remain on any public or private property of any of the following items, conditions or actions are hereby declared to be and constitute a nuisance: (2) Accumulation of trash, litter, debris, garbage, bottles, paper, cans, rags, dead or decayed fish, fowl, meat or other animal matter; fruit, vegetables, offal, bricks, concrete, scrap lumber or other building debris or other refuse of any nature; and Section 114-33(2) – Interpretations of permitted uses and structures. A requested use or structure that is not expressly permitted in a classification shall be prohibited in that classification.

ORDER

Based on the foregoing Findings of Fact and Conclusions of Law, and the authority of Chapter 162, Florida Statutes and the Holly Hill Code Enforcement Ordinance, Chapter 2 Section 2-118, it is duly ORDERED by this Special Magistrate that the Respondent shall pay an administrative fine of two hundred fifty dollars ($250.00), which if not paid in ninety (90) days from the date of this order shall be recorded as a lien and such recordation shall constitute a lien against the Respondent's real (except homestead) and personal property in Volusia County, Florida, said property to include, but not necessarily limited to that described above.

If the Respondent fails to correct all the violations within fourteen (14) days, the City of Holly Hill employees, subcontractors, and/or agents shall be granted permission (pending a ruling of the same from the City Commissioners) to enter the property to remove all items declared a nuisance according to city ordinance Section 26-61. All costs and expenses incurred by the City of Holly Hill for the removal of the items shall be paid by the Owner. If the Owner fails to pay these costs and expenses they shall be recorded as a lien on the property.

Attachment: Exhibit E - Correspondence / Letter (4243 : 1625 Anniston Avenue Nuisance Abatement)

Any repeat violations within five (5) years of this order shall result in enhanced fines and fees.

DONE AND ORDERED this 26th day of April 2023, in Holly Hill, County of Volusia, Florida.

CITY OF HOLLY HILL
CODE ENFORCEMENT

By, _____
Melody Pullen, Special Magistrate

Attest: _____
Code Enforcement Official

This instrument prepared by Melody Pullen, Special Magistrate for the Code Enforcement, 1065 Ridgewood Avenue, Holly Hill, Florida 32117, Telephone number: (386) 248-9490.

STATE OF FLORIDA, VOLUSIA COUNTY
I HEREBY CERTIFY the foregoing is a true copy
of the original filed in this office. This 27th, day of April, 2023.

VALERIE MANNING
MY COMMISSION # GG 350523
EXPIRES: October 30, 2023
Bonded Thru Notary Public Underwriters

_____
City Clerk, City of Holly Hill

CERTIFICATE OF SERVICE

I HEREBY CERTIFY that on 27th day of April, 2023 a true and accurate copy of the foregoing has been furnished by U.S. Mail to:

Sherri W. Hammond
1625 Anniston Avenue
Holly Hill, FL 32117

_____
Code Enforcement Official

Attachment: Exhibit E - Correspondence / Letter (4243 : 1625 Anniston Avenue Nuisance Abatement)



Attachment: Pictures taken 2-3-2013 (4243 : 1625 Anniston Avenue Nuisance Abatement)



Attachment: Pictures taken 2-3-2013 (4243 : 1625 Anniston Avenue Nuisance Abatement)



Attachment: Pictures taken 2-3-2013 (4243 : 1625 Anniston Avenue Nuisance Abatement)



Attachment: Pictures taken 2-3-2013 (4243 : 1625 Anniston Avenue Nuisance Abatement)



Attachment: Pictures taken 2-3-2013 (4243 : 1625 Anniston Avenue Nuisance Abatement)



Attachment: Pictures taken 8-28-13 (4243 : 1625 Anniston Avenue Nuisance Abatement)



Attachment: Pictures taken 8-28-13 (4243 : 1625 Anniston Avenue Nuisance Abatement)





Attachment: Pictures taken 8-28-13 (4243 : 1625 Anniston Avenue Nuisance Abatement)



Attachment: Pictures taken 8-28-13 (4243 : 1625 Anniston Avenue Nuisance Abatement)

Pictures Taken of 1625 Anniston Avenue on 12-21-2022 by Code Enforcement Officer K. Mahanes









Attachment: Pictures Taken on 12-21-22 (4243 : 1625 Anniston Avenue Nuisance Abatement)


SUPER
START
PREMIUM







Attachment: Pictures Taken on 12-21-22 (4243 : 1625 Anniston Avenue Nuisance Abatement)



Pictures Taken of Conditions at 1625 Anniston Avenue on 4/5/23 by Code Enforcement Officer K. Mahanes



Attachment: Pictures Taken 4-5-23 (4243 : 1625 Anniston Avenue Nuisance Abatement)



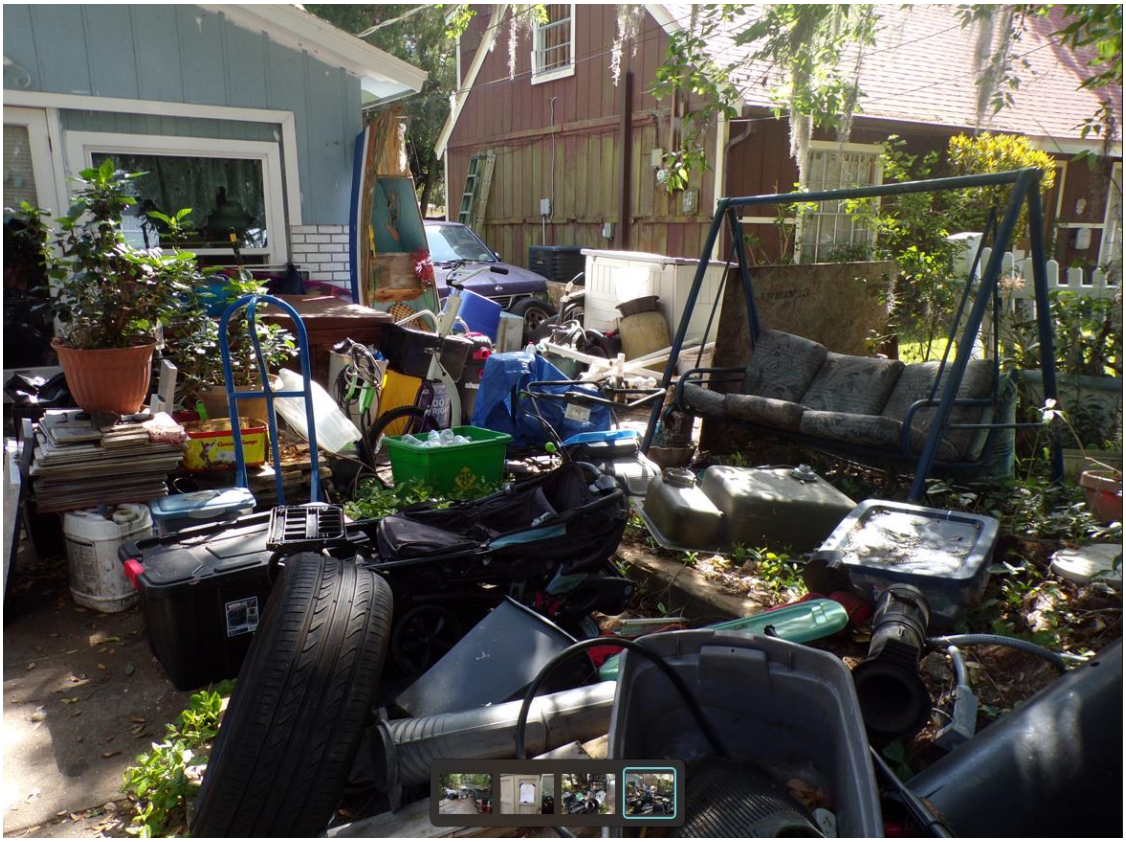

Attachment: Pictures Taken 4-5-23 (4243 : 1625 Anniston Avenue Nuisance Abatement)

Pictures Taken of Conditions at 1625 Anniston Avenue on 9/14/23 by Code Enforcement Officer K. Mahanes



Attachment: Pictures - 9-14-23 (4243 : 1625 Anniston Avenue Nuisance Abatement)





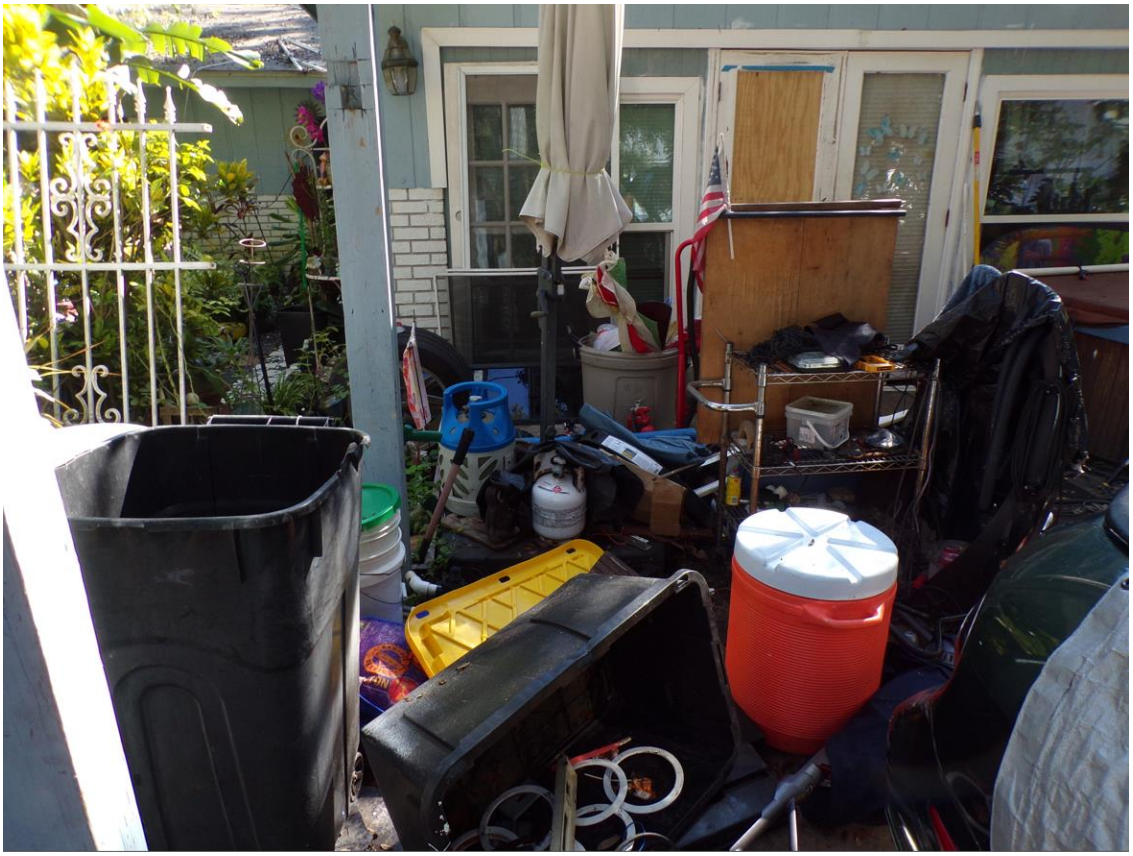


Johnson
8.0



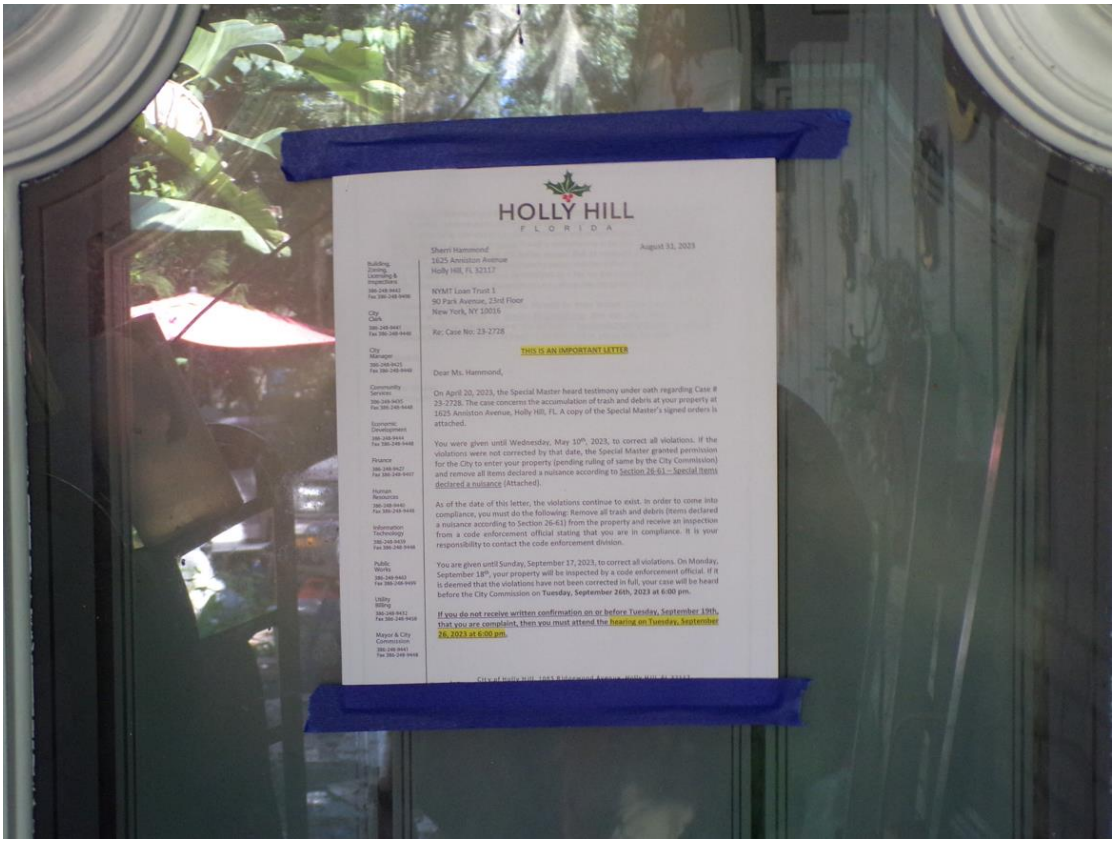

HOLLY HILL
FLORIDA

Sherri Hammond
1625 Anniston Avenue
Holly Hill, FL 32117

August 31, 2023

NYMT Loan Trust 1
90 Park Avenue, 23rd Floor
New York, NY 10016

Re: Case No: 23-2728

THIS IS AN IMPORTANT LETTER

Dear Ms. Hammond,

On April 20, 2023, the Special Master heard testimony under oath regarding Case # 23-2728. The case concerns the accumulation of trash and debris at your property at 1625 Anniston Avenue, Holly Hill, FL. A copy of the Special Master's signed orders is attached.

You were given until Wednesday, May 10th, 2023, to correct all violations. If the violations were not corrected by that date, the Special Master granted permission for the City to enter your property (pending ruling of same by the City Commission) and remove all items declared a nuisance according to Section 26-61 – Special Items declared a nuisance (Attached).

As of the date of this letter, the violations continue to exist. In order to come into compliance, you must do the following: Remove all trash and debris (items declared a nuisance according to Section 26-61) from the property and receive an inspection from a code enforcement official stating that you are in compliance. It is your responsibility to contact the code enforcement division.

You are given until Sunday, September 17, 2023, to correct all violations. On Monday, September 18th, your property will be inspected by a code enforcement official. If it is deemed that the violations have not been corrected in full, your case will be heard before the City Commission on **Tuesday, September 26th, 2023 at 6:00 pm.**

If you do not receive written confirmation on or before Tuesday, September 19th, that you are complaint, then you must attend the hearing on Tuesday, September 26, 2023 at 6:00 pm.

Attachment: Pictures - 9-14-23 (4243 : 1625 Anniston Avenue Nuisance Abatement)

1625 Anniston Avenue

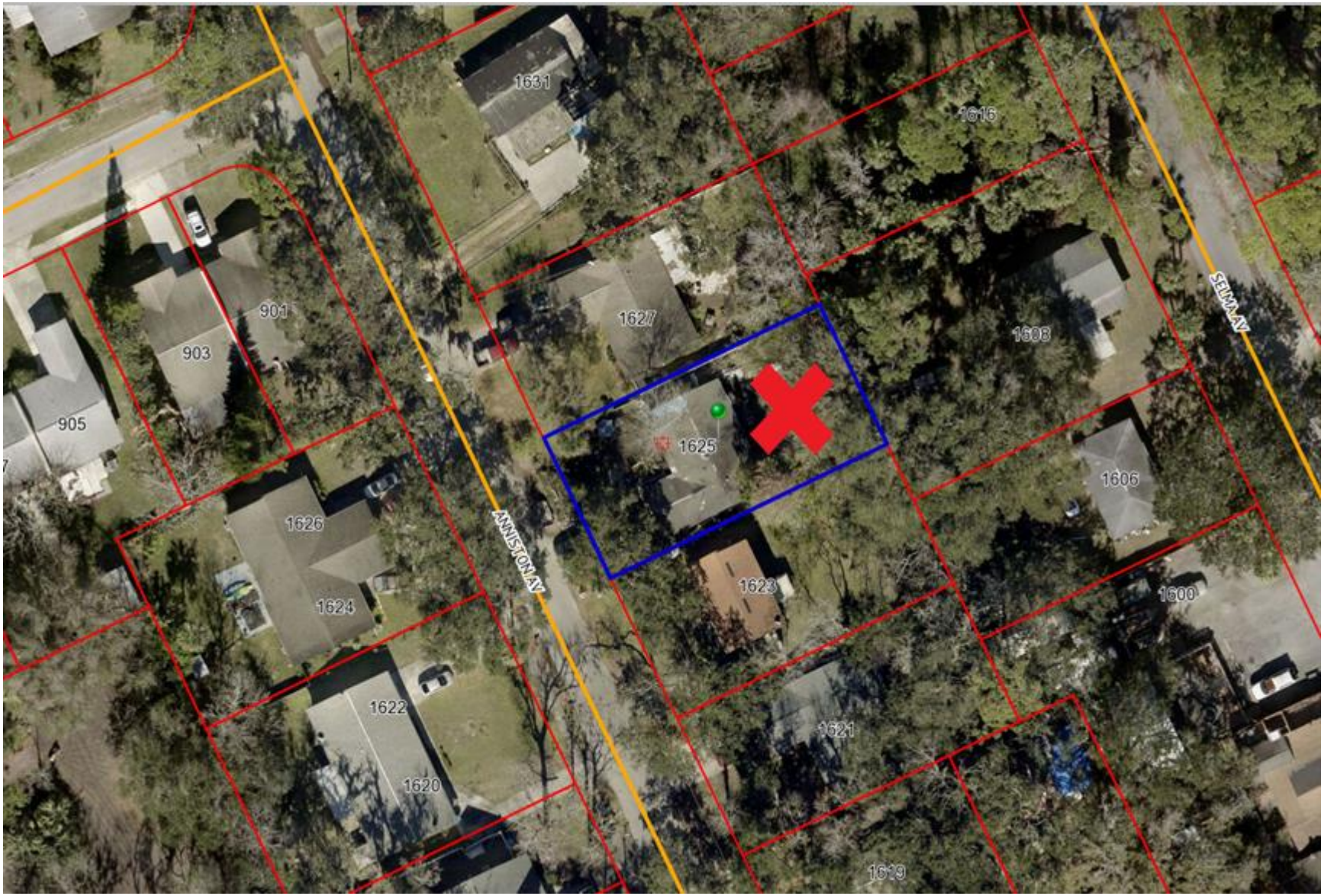

Attachment: Aerial (4243 : 1625 Anniston Avenue Nuisance Abatement)

Sec. 26-61. Special items declared a nuisance.

The maintaining, using, placing, depositing, leaving or permitting to be or remain on any public or private property of any of the following items, conditions or actions are hereby declared to be and constitute a nuisance:

(1) Any weeds such as broom grass, jimson, burdock, ragweed, sandspur or other similar weeds; or any other vegetation, other than trees, ornamental bushes, flowers or other ornamental plants with a height exceeding 12 inches;

(2) Accumulation of trash, litter, debris, garbage, bottles, paper, cans, rags, dead or decayed fish, fowl, meat or other animal matter; fruit, vegetables, offal, bricks, concrete, scrap lumber or other building debris or other refuse of any nature;

(3) Any condition which provides harborage for rats, mice, snakes and other vermin;

(4) Any building or other structure which is in such a dilapidated condition that it is unfit for human habitation, or kept in such an insanitary condition that it is a menace to the health of people residing in the vicinity thereof, or presents a more than ordinarily dangerous fire hazard in the vicinity where it is located;

(5) All unnecessary or unauthorized noises and annoying vibrations, including animal noises;

(6) All disagreeable or obnoxious odors and stenches, as well as the conditions, substances or other causes which give rise to the emission or generation of such odors and stenches;

(7) The carcasses of animals or fowl not disposed of within a reasonable time after death;

(8) The pollution of any public well or cistern, stream, lake, canal or body of water by sewage, dead animals, creamery wastes, industrial wastes or other substances;

(9) Any building, structure or other place or location where any activity which is in violation of local, state or federal law is conducted, performed or maintained;

(10) Any accumulation of stagnant water permitted or maintained on any lot or piece of ground;

(11) The storage or accumulation of junk in any area zoned for residential use;

(12) Any act resulting in the discharge, dumping, or disposal of any contents of any septic tank, dry well, raw sewage, grease or similar material, regardless of its source, into or upon any land or body of water within the city, except as may be allowed through the city's sewer system or as otherwise authorized by section 70-173;

(13) Improperly built or maintained septic tanks, water closets, or privies;

(14) Any act by which the health or life of any individual may be threatened or impaired, or by which or through which, directly or indirectly, disease may be caused;

(15) Any method for disposing of the contents of any septic tank, dry well, raw sewage, grease or similar material which has not been approved by the county health department or state department of health and rehabilitative services;

(16) Improper maintenance or operation of any vehicle designed or used for the transportation or disposal of the contents of any septic tank, dry well, raw sewage, grease, or similar material, which may threaten or impair the health or lives of any individual, or by which or through which, directly or indirectly, disease may be caused.

(Code 1984, § 18-1)

Attachment: Sec. 26-61. Special items declared a nuisance. (4243 : 1625 Anniston Avenue Nuisance Abatement)

HOLLY HILL
FLORIDA

STAFF REPORT
CITY OF HOLLY HILL, FLORIDA

City Commission
Ordinance

MEETING DATE: **February 14, 2023**
FROM: **Brian Walker**
SUBJECT: **SECOND READING - an Ordinance of the City of Holly Hill, Florida, Amending Chapter 3 (Enforcement) of the Holly Hill Code of Ordinance to Provide the City with a Process to Abate Nuisances Listed in Section 26-61 (Special Items Declared a Nuisance) of the Holly Hill Code of Ordinances; Providing for Notice to the Property Owner; Providing for Collection of Costs Incurred; Providing for Conflicting Ordinances; Providing for Severability; and Providing an Effective Date.**
NUMBER: **2023-O-3059**
APPLICANT: **Brian Walker**
PLANNER:

TITLE

Consider adoption of an Ordinance of the City of Holly Hill, Florida, amending the Holly Hill Code of Ordinances by amending Chapter 3 (Enforcement) of the Holly Hill Code of Ordinances, to provide the City with a process to abate nuisances listed in Section 26-61 (special items declared a nuisance.)

BACKGROUND

Code Enforcement is an important focus of the City of Holly Hill. Holly Hill Code Enforcement officers enforce a broad range of land use-related ordinances to ensure that a healthy and safe environment is maintained for the residents, businesses, and visitors of Holly Hill.

The process through which Code Officers do their job is outlined in the City's Code of Ordinances - particularly Chapter 2, Division 3, titled Code Enforcement, and Chapter 3, titled Enforcement. These chapters discuss definitions, the enforcement procedure, issuance of citations, and abatement, along with other topics related to the code enforcement process.

Chapter 26, Section 26-61 of the Code, titled Special items declared a nuisance, provides a list of items that are declared to be and constitute a nuisance. These include items such as the accumulation of trash and debris, storage of junk, improperly maintained septic tanks, as well as other types of nuisances.

In general, unresolved violations of code, such as the accumulation of trash and debris on private property, can lead to the issuance of daily fines and ultimately the placing of liens on the property. However, with few exceptions, the City does not specifically have the authority to abate (which is to "put an end to") a nuisance, by entering onto private property and removing (for example), trash and debris, or abate other types of nuisances. In general, once a lien is

Attachment: Ordinance 3059 - Amending Chapter 3 Code Enforcement - Abate Nuisance (4243 : 1625 Anniston Avenue Nuisance Abatement)

placed on a property for an unresolved violation of code, the City must wait for the property owner to abate (put an end to) the nuisance. This can become a severe problem in the case for instance, of a hoarder who refuses to remove large amounts of trash and debris from their property, and who in fact continues to accumulate such trash and debris.

The purpose of the proposed Ordinance is to expand the ability of the City to abate nuisances listed in Chapter 26, Section 26-61, including by entering onto private property, only after following the process outlined in the Ordinance, and receiving authorization from the City Commission. The proposed Ordinance also provides a process for notice, and authorizes the City to file a lien for costs incurred and pursue collection of costs as an assessment.

BOARD OF PLANNING AND APPEALS RECOMMENDATION

At its regular meeting on January 9, 2023 the Board of Planning and Appeals voted 4 to 1 in favor of recommending the proposed Ordinance.

STAFF RECOMMENDATION

Adopt an Ordinance of the City of Holly Hill, Florida, amending Chapter 3 (Enforcement) of the Holly Hill Code of Ordinances to provide the City with a process to abate nuisances listed in Section 26-61 (special items declared a nuisance) of the Holly Hill Code of Ordinances; providing for notice to the property owner; providing for collection of costs incurred; providing for conflicting ordinances; providing for severability; and providing an effective date.

ATTACHMENTS:

- Chapter 3. ENFORCEMENT (PDF)
- Division 3. CODE ENFORCEMENT (PDF)
- Sec. 26-61. Special Items Declared a Nuisance (PDF)

HISTORY:

01/24/23 City Commission APPROVED AT 1ST READING
Next: 02/14/23

Mayor Via opened public participation. No one spoke.

Attachment: Ordinance 3059 - Amending Chapter 3 Code Enforcement - Abate Nuisance (4243 : 1625 Anniston Avenue Nuisance Abatement)

Ordinance No. 2023-3059

SECOND READING - AN ORDINANCE OF THE CITY OF HOLLY HILL, FLORIDA, AMENDING CHAPTER 3 (ENFORCEMENT) OF THE HOLLY HILL CODE OF ORDINANCE TO PROVIDE THE CITY WITH A PROCESS TO ABATE NUISANCES LISTED IN SECTION 26-61 (SPECIAL ITEMS DECLARED A NUISANCE) OF THE HOLLY HILL CODE OF ORDINANCES; PROVIDING FOR NOTICE TO THE PROPERTY OWNER; PROVIDING FOR COLLECTION OF COSTS INCURRED; PROVIDING FOR CONFLICTING ORDINANCES; PROVIDING FOR SEVERABILITY; AND PROVIDING AN EFFECTIVE DATE.

AN ORDINANCE OF THE CITY OF HOLLY HILL, FLORIDA, AMENDING CHAPTER 3 (ENFORCEMENT) OF THE HOLLY HILL CODE OF ORDINANCE TO PROVIDE THE CITY WITH A PROCESS TO ABATE NUISANCES LISTED IN SECTION 26-61 (SPECIAL ITEMS DECLARED A NUISANCE) OF THE HOLLY HILL CODE OF ORDINANCES; PROVIDING FOR NOTICE TO THE PROPERTY OWNER; PROVIDING FOR COLLECTION OF COSTS INCURRED; PROVIDING FOR CONFLICTING ORDINANCES; PROVIDING FOR SEVERABILITY; AND PROVIDING AN EFFECTIVE DATE.

WHEREAS, Section 26-21 (Special Items Declared a Nuisance) of the Holly Hill Code of Ordinances declares certain conditions and activities to be nuisances; and

WHEREAS, Chapter 3 (Enforcement) of the Holly Hill Code of Ordinances provides a process for the city to abate certain nuisances but not all nuisances identified in Section 26-61 of the Holly Hill Code of Ordinances; and

WHEREAS, the City Commission believes that expanding the process under Section 3 (Enforcement) to include all the conditions and activities listed in Section 26-61 (Special Items Declared a Nuisance) will be a useful tool for the City in remedying properties with nuisance conditions.

Attachment: Ordinance 3059 - Amending Chapter 3 Code Enforcement - Abate Nuisance (4243 : 1625 Anniston Avenue Nuisance Abatement)

NOW, THEREFORE, BE IT ORDAINED BY THE CITY COMMISSION OF THE CITY OF HOLLY HILL, FLORIDA:

SECTION 1.

Sec. 3-1. General provision.

(a) Except when specifically provided otherwise in this Code, violations of this Code shall be enforced as provided pursuant to this ~~c~~ Chapter and Chapter 2 (Administration), Article III (Board, Committee, Commissions), Division 3 (Code Enforcement).

(b) The city shall have the authority to remove from private property vehicles and other equipment parked or stored in violation of the city regulations, including but not limited to Chapter 114, divisions 6 and 7, and shall have the authority, in addition to any procedure established under state law, to abate nuisances described in section 26-61 pursuant to the following procedure:

(1) Whenever a code enforcement officer, building official, police chief or any member of their respective departments (hereinafter referred to collectively as city official) determines that there is a violation of a regulation of the city, such city official shall pursue code enforcement pursuant to Chapter 2 (Administration), Article III (Board, Committee, Commissions), Division 3 (Code Enforcement), unless an emergency condition justifies other lawful response. The city official can request the special magistrate authorize the City to enter the property for purposes of yard maintenance such as mowing, trimming, debris removal, etc. All other nuisance conditions shall be abated as set forth below. ~~shall issue a notice of violation setting forth the provision(s) of the Code that is/are violated, the corrective action that is required, the time allowed for corrective action which shall be reasonable and that the party has the right to a hearing regarding the violation as long as a request is submitted in writing to the~~

Attachment: Ordinance 3059 - Amending Chapter 3 Code Enforcement - Abate Nuisance (4243 : 1625 Anniston Avenue Nuisance Abatement)

~~city within the time allowed for corrective action. The notice shall also provide that failure to correct the violation(s) could result in the city taking the necessary action to correct the violation(s) and charging the property owner for such action plus the levying of fines.~~

(2) If the property owner fails to correct the violation(s) pursuant to the Order issued pursuant to Chapter 2 (Administration), Article III (Board, Committee, Commissions), Division 3 (Code Enforcement) and the nuisance condition still exists, the city official may pursue abatement pursuant to Section 3-2 below.

~~If after the reasonable time for corrective action has elapsed and the violation is still in existence and the property owner has not requested a hearing, the city official is hereby authorized to take the necessary actions, within the legal constraints of the law, to correct the violation.~~

~~(3) After the corrective action has been performed by the city or its authorized agent(s), the city official shall immediately notify the property owner of the action that was taken and if property was removed from the premises, that the property owner has the right to reclaim the property by paying all fees and costs incurred by the city and the wrecker company in the removal and impoundment of the property and all fines that have been assessed. The notice shall include the name and address of the wrecker company where the property is being stored. If the city has corrected the Code violation(s), such as mowing the property, the property shall be liened for the services rendered, plus all costs incurred in liening the property.~~

~~(4) Once property is towed at the direction of the city, the property shall become the responsibility of the wrecker company. If the property is not reclaimed by the property owner, such property shall be disposed of by the wrecker company as provided by law and the city shall not be responsible for such property nor the ultimate disposition of such~~

Attachment: Ordinance 3059 - Amending Chapter 3 Code Enforcement - Abate Nuisance (4243 : 1625 Anniston Avenue Nuisance Abatement)

~~property.~~

~~(5) If a hearing is requested under this section, the hearing shall be held before the city commission, and the matter shall be placed on the commission's agenda at the next regularly held commission meeting following receipt of the written request for the hearing. The property owner shall be provided written notice of the date, time and place of the hearing. If the city commission determines that a violation exists, the commission has the discretion to allow the property owner additional time for corrective action and shall authorize necessary corrective action.~~

(~~6~~3) The term "property owner" as used in this section for purpose of issuance of a notice of violation as provided in subsection (1) shall mean the owner for owner-occupied structures and vacant land and tenant for rental properties. The intent is to provide the notice to the individual in possession and control of the subject premises. If property is removed from the subject premises, i.e., the towing of a vehicle, the notice required in subsection (3), above, shall be given to the same party receiving the notice of violation in subsection (1), above, and to the owner of the property removed.

Sec. 3-2. Abatement of nuisance by demolition.

The city shall have the right to abate a nuisance by removing or correcting the condition(s) constituting a nuisance, such as demolishing the structure or other property constituting such nuisance, removing junk, garbage and debris, and any other condition constituting a nuisance under Section 26-61 pursuant to the following procedure:

(a) The city official shall provide a written notice to the property owner and tenant setting forth the following:

Attachment: Ordinance 3059 - Amending Chapter 3 Code Enforcement - Abate Nuisance (4243 : 1625 Anniston Avenue Nuisance Abatement)

(1) The violation(s) that exist on the premises and a cite to the Code section(s) that are in violation;

(2) The corrective action to be taken;

(3) A reasonable time for the corrective action to be performed; and

(4) That if the corrective action is not taken within the time allowed, the city commission will hold a public hearing to determine whether a public nuisance exists and if so, the appropriate remedy to abate the nuisance, including the demolition of the structure or property and correcting any other conditions constituting a nuisance.

(b) The city shall also perform a title search on the subject property to determine all lien holder(s) and shall provide the notice in subsection (1), above, to such lien holder(s).

(c) If the corrective action is not performed within the time allowed, and any extensions thereto, the city official is authorized to request a public hearing before the city commission for a determination as to whether or not a public nuisance exists on the subject property and if so, the remedy that the city official deems appropriate, including the demolition of the structure or the removal of any conditions that constitutes a nuisance under Section 26-61. If the city commission determines a nuisance exists, the city commission shall determine a reasonable time for the property owner to eliminate the nuisance(s) and if not eliminated within the allowed time, authorize the city to enter the subject property and abate the nuisance(s). The property owner(s), tenant(s) and all lien holders shall receive a copy of the notice of public hearing. At such public hearing, the city commission shall hear testimony and receive other forms of evidence from all interested parties and shall make its determination based on the evidence presented.

Attachment: Ordinance 3059 - Amending Chapter 3 Code Enforcement - Abate Nuisance (4243 : 1625 Anniston Avenue Nuisance Abatement)

(d) Once property is towed at the direction of the city, the property shall become the responsibility of the wrecker company. If the property is not reclaimed by the property owner, such property shall be disposed of by the wrecker company as provided by law and the city shall not be responsible for such property nor the ultimate disposition of such property.

Sec. 3-3. Notice requirements.

All notices required by this chapter shall be provided to the required party in one of the following methods:

(a) By certified mail, return receipt requested, to the last known address of the alleged violator pursuant to the tax rolls;

(b) By hand delivery by the code inspector, by a city police officer or other person designated by the city;

(c) By publishing the notice once a week for four consecutive weeks in a paper of general circulation in the county, with the proof of publication made in compliance with F.S. §§ 50.041 and 50.051, as amended;

(d) By posting for at least ten days in two locations, one of which shall be the property upon which the violation is alleged to exist and the other of which shall be at City Hall, along with a proof of posting by affidavit which shall include a copy of the notice posted and the date and place of posting;

(e) Evidence that an attempt has been made to hand deliver or mail the notice as provided in subsections (1) and (2), above, together with proof of publication or posting as provided in subsections (3) and (4), above, shall be sufficient to establish that the notice requirements have been met, without regard to whether or not the party actually received such

Attachment: Ordinance 3059 - Amending Chapter 3 Code Enforcement - Abate Nuisance (4243 : 1625 Anniston Avenue Nuisance Abatement)

notice.

Sec. 3-4. Lien for Cost and Collection.

All costs incurred by the city in abating the nuisance (including cost of remedying the code violation(s) or public nuisance(s), all administrative, legal, posts and publication expenses, as well as other direct or indirect costs associated therewith) may be recorded as a lien on the subject property and to the extent permitted, may be collected as an assessment pursuant to Chapter 30 (Finance), Article IV (Special Assessment). In addition to the above, the city may collect the costs incurred by any other legal means.

SECTION 2. If any section, subsection, sentence, clause, phrase, or portion of this Ordinance, or application hereof, is for any reason held invalid or unconstitutional by any Court, such portion or application shall be deemed a separate, distinct, and independent provision, and such holding shall not affect the validity of the remaining portions or application hereof.

SECTION 3. That all ordinances made in conflict with this Ordinance are hereby repealed.

SECTION 4. That this Ordinance shall become effective immediately upon its adoption.

APPROVED AND AUTHENTICATED on the 14th day of FEBRUARY, 2023 for second and final reading.

Attachment: Ordinance 3059 - Amending Chapter 3 Code Enforcement - Abate Nuisance (4243 : 1625 Anniston Avenue Nuisance Abatement)

Chris Via, Mayor 2/14/2023

Valerie Manning, City Clerk,CMC 2/14/2023

RESULT:	**ADOPTED AT 2ND READING [UNANIMOUS]**
MOVER:	John C. Danio, District 3 - Commissioner
SECONDER:	Roy Johnson, District 4 - Commissioner
AYES:	Via, Currie, Danio, Johnson
ABSENT:	Penny

Attachment: Ordinance 3059 - Amending Chapter 3 Code Enforcement - Abate Nuisance (4243 : 1625 Anniston Avenue Nuisance Abatement)

HOLLY HILL
FLORIDA

STAFF REPORT
CITY OF HOLLY HILL, FLORIDA

City Commission
Resolution

MEETING DATE: **September 26, 2023**
FROM: **Valerie Manning**
SUBJECT: **A Resolution of the City Commission of the City of Holly Hill, Florida, Adopting an Official List Identifying City-Owned Real Property Deemed Appropriate for Use as Affordable Housing Pursuant to Section 166.4451, Florida Statutes; Providing for Severability; Providing for Conflicts; and Providing for an Effective Date.**
NUMBER: **2023-R-58**
APPLICANT:
PLANNER:

DISCUSSION:

On March 29, 2023, the Governor signed Senate Bill (SB) 102, known as the Live Local Act into law that seeks to provide incentives to build affordable and workforce housing. The law is effective July 1, 2023. The purpose of this Public Hearing item is to inform the City Commission of the pending law and to approve the qualified inventory for real property within the City of Holly Hill and to adopt a Resolution that includes the inventory list. The list is below.

BACKGROUND:

The Live Local Act was signed into law on March 29, 2023 and is effective July 1, 2023. Attached to the packet is (1) Bill Analysis and Fiscal Impact Statement and (2) text of the Live Local Act. The law has a wide range of amendments to state level resources that is discussed in the bill analysis. The focus of this disposition item is the amendments that would impact local jurisdictions. City staff are reviewing SB 102 and additional information will be provided leading up to the implementation. Key parts of the legislation include:

1) A municipality must authorize multifamily and mixed-use residential as allowable uses in any area zoned for commercial, industrial, or mixed use if at least 40 percent of the residential units in a proposed multifamily rental development are, for a period of at least 30 years, affordable as defined in s. 420.0004. Notwithstanding any other law, local ordinance, or regulation to the contrary, a municipality may not require a proposed multifamily development to obtain a zoning or land use change, special exception, conditional use approval, variance, or comprehensive plan amendment for the building height, zoning, and densities authorized under this subsection.

2) A municipality may not restrict the density of a proposed development

authorized under this subsection below the highest allowed density on any land in the municipality where residential development is allowed.

3) A municipality may not restrict the height of a proposed development authorized under this subsection below the highest currently allowed height for a commercial or residential development located in its jurisdiction within 1 mile of the proposed development or 3 stories, which is higher.

4) A proposed development authorized under this subsection must be administratively approved and no further action by the governing body of the municipality is required if the development satisfies the municipality's land development regulations for multifamily developments in areas zoned for such use and is otherwise consistent with the comprehensive plan, with the exception of the provisions establishing allowable densities, height, and land use.

5) Requires local governments to maintain a public, written policy that outlines procedures for expediting building permits and development orders for affordable housing.

6) Requires local governments to update and electronically publish an inventory of publicly owned property that may be appropriate for affordable and workforce housing.

2023 Florida Statue 166.0451 per the 2023 Legislative Session:

166.0451 Disposition of municipal property for affordable housing.

(1) By October 1, 2023, and every 3 years thereafter, each municipality shall prepare an inventory list of all real property within its jurisdiction to which the municipality or any dependent special district within its boundaries holds fee simple title which is appropriate for use as affordable housing. The inventory list must include the address and legal description of each such property and specify whether the property is vacant or improved. The governing body of the municipality must review the inventory list at a public hearing and may revise it at the conclusion of the public hearing. Following the public hearing, the governing body of the municipality shall adopt a resolution that includes an inventory list of such property. Each municipality shall make the inventory list publicly available on its website to encourage potential development.

(2) The properties identified as appropriate for use as affordable housing on the inventory list adopted by the municipality may be used for affordable housing through a long-term land lease requiring the development and maintenance of affordable housing, offered for sale and the

proceeds used to purchase land for the development of affordable housing or to increase the local government fund earmarked for affordable housing, sold with a restriction that requires the development of the property as permanent affordable housing, or donated to a nonprofit housing organization for the construction of permanent affordable housing. Alternatively, the municipality or special district may otherwise make the property available for use for the production and preservation of permanent affordable housing. For purposes of this section, the term "affordable" has the same meaning as in s. 420.0004(3).

(3) Municipalities are encouraged to adopt best practices for surplus land programs, including, but not limited to:

(a) Establishing eligibility criteria for the receipt or purchase of surplus land by developers;

(b) Making the process for requesting surplus lands publicly available; and

(c) Ensuring long-term affordability through ground leases by retaining the right of first refusal to purchase property that would be sold or offered at market rate and by requiring reversion of property not used for affordable housing within a certain time frame.

Therefore, the following inventory list of real property owned by the city for affordable housing per the Statute is listed below:

1. Parcel ID: 424216000040
   Physical Address: Walker Street, Holly Hill, FL 32117
   Owner: City of Holly Hill - Municipal - 100%
   1065 Ridgewood Avenue, Holly Hill, FL 32117
   Neighborhood: State Street Commercial
   Subdivision Name: Fountainhead
   Property Use: Vacant Governmental
   Sq Feet: 235,224
   Acres: 5.4
   Short Description: 42-14-32 LOT 4 FOUNTAINHEAD MB 58 PG 91

2. Parcel ID: 424216000030
   Physical Address: Walker Street, Holly Hill, FL 32117
   Owner: City of Holly Hill - Municipal - 100%
   1065 Ridgewood Avenue, Holly Hill, FL 32117
   Neighborhood: State Street Commercial
   Subdivision Name: Fountainhead
   Property Use: Vacant Governmental
   Sq Feet: 126,324
   Acres: 2.9
   Short Description: 42-14-32 LOT 3 FOUNTAINHEAD MB 58 PG 91

FISCAL ANALYSIS:

There is no budget impact as the result of this agenda item.

STAFF RECOMMENDATION:

Recommend the City Commission approve the inventory list of real property for affordable housing per Florida Statute 166.0451 that is owned by the city and adopt the attached Resolution.

COMMISSION GOAL:

N/A

MOTION:

APPROVE THE INVENTORY LIST OF REAL PROPERTY AND APPROVE THE RESOLUTION ADOPTING AN OFFICIAL LIST IDENTIFYING CITY-OWNED REAL PROPERTY DEEMED APPROPRIATE FOR USE AS AFFORDABLE HOUSING PURSUANT TO SECTION 166.0451, FLORIDA STATUTES.

ATTACHMENTS:

- 2023 Florida Statute 166.0451 - Disposition of Municipal Property for Affordable Housing (PDF)
- EXHIBIT A - Inventory List for Affordable Housing (PDF)

Resolution No. 2023-58

A RESOLUTION OF THE CITY COMMISSION OF THE CITY OF HOLLY HILL, FLORIDA, ADOPTING AN OFFICIAL LIST IDENTIFYING CITY-OWNED REAL PROPERTY DEEMED APPROPRIATE FOR USE AS AFFORDABLE HOUSING PURSUANT TO SECTION 166.4451, FLORIDA STATUTES; PROVIDING FOR SEVERABILITY; PROVIDING FOR CONFLICTS; AND PROVIDING FOR AN EFFECTIVE DATE.

A RESOLUTION OF THE CITY COMMISSION OF THE CITY OF HOLLY HILL, FLORIDA, ADOPTING AN OFFICIAL LIST IDENTIFYING CITY-OWNED REAL PROPERTY DEEMED APPROPRIATE FOR USE AS AFFORDABLE HOUSING PURSUANT TO SECTION 166.0451, FLORIDA STATUTES; PROVIDING FOR SEVERABILITY; PROVIDING FOR CONFLICTS; AND PROVIDING FOR AN EFFECTIVE DATE.

WHEREAS, section 166.0451, Florida Statutes, requires all municipalities in Florida to prepare an inventory list of real property owned by each municipality that is appropriate for use as affordable housing by October 1, 2023, and every three years thereafter; and

WHEREAS, section 166.0451, Florida Statutes, further requires each municipality to review the inventory list at a public hearing, to adopt a resolution that includes the inventory list of such property, and to post the inventory list on the municipality's website; and

WHEREAS, the City of Holly Hill has prepared and reviewed the City's official inventory list of city-owned property deemed suitable for affordable housing and now seeks to adopt the inventory list as required by section 166.0451, Florida Statutes.

NOW, THEREFORE, BE IT RESOLVED BY THE CITY COMMISSION OF THE CITY OF HOLLY HILL, FLORIDA:

SECTION 1. The City Commission does hereby adopt the official list of real property owned by the City that which is appropriate for use as affordable housing, pursuant to section 166.0451(1), Florida Statutes, hereto attached and made a part of this resolution as "Exhibit A".

SECTION 2. SEVERABILITY. If any section or portion of a section of this Resolution proves to be invalid, unlawful, or unconstitutional, it shall not be held to invalidate or impair the validity, force, or effect of any other section or part of this Resolution.

SECTION 3. CONFLICTS. This Resolution shall control over any Resolutions or parts of Resolutions in conflict herewith.

SECTION 4. EFFECTIVE DATE. This Resolution shall take effect immediately upon its adoption.

APPROVED AND AUTHENTICATED on this 26th day of SEPTEMBER, 2023.

2023 FLORIDA STATUES

[1]166.0451 Disposition of municipal property for affordable housing. –

(1) By October 1, 2023, and every 3 years thereafter, each municipality shall prepare an inventory list of all real property within its jurisdiction to which the municipality or any dependent special district within its boundaries holds fee simple title which is appropriate for use as affordable housing. The inventory list must include the address and legal description of each such property and specify whether the property is vacant or improved. The governing body of the municipality must review the inventory list at a public hearing and may revise it at the conclusion of the public hearing. Following the public hearing, the governing body of the municipality shall adopt a resolution that includes an inventory list of such property. Each municipality shall make the inventory list publicly available on its website to encourage potential development.

(2) The properties identified as appropriate for use as affordable housing on the inventory list adopted by the municipality may be used for affordable housing through a long-term land lease requiring the development and maintenance of affordable housing, offered for sale and the proceeds used to purchase land for the development of affordable housing or to increase the local government fund earmarked for affordable housing, sold with a restriction that requires the development of the property as permanent affordable housing, or donated to a nonprofit housing organization for the construction of permanent affordable housing. Alternatively, the municipality or special district may otherwise make the property available for use for the production and preservation of permanent affordable housing. For purposes of this section, the term "affordable" has the same meaning as in s. 420.0004(3).

(3) Municipalities are encouraged to adopt best practices for surplus land programs, including, but not limited to:

(a) Establishing eligibility criteria for the receipt or purchase of surplus land by developers;

(b) Making the process for requesting surplus lands publicly available; and

(c) Ensuring long-term affordability through ground leases by retaining the right of first refusal to purchase property that would be sold or offered at market rate and by requiring reversion of property not used for affordable housing within a certain timeframe.

Attachment: 2023 Florida Statute 166.0451 - Disposition of Municipal Property for Affordable Housing (2023-R-58 : Live Local Act - FL Statute

EXHIBIT "A"

1. Parcel ID: 424216000040
   Physical Address: Walker Street, Holly Hill, FL 32117
   Owner: City of Holly Hill - Municipal - 100%
   1065 Ridgewood Avenue, Holly Hill, FL 32117
   Neighborhood: State Street Commercial
   Subdivision Name: Fountainhead
   Property Use: Vacant Governmental
   Sq Feet: 235,224
   Acres: 5.4
   Short Description: 42-14-32 LOT 4 FOUNTAINHEAD MB 58 PG 91
2. Parcel ID: 424216000030
   Physical Address: Walker Street, Holly Hill, FL 32117
   Owner: City of Holly Hill - Municipal - 100%
   1065 Ridgewood Avenue, Holly Hill, FL 32117
   Neighborhood: State State Commercial
   Subdivision Name: Fountainhead
   Property Use: Vacant Governmental
   Sq Feet: 126,324
   Acres: 2.9
   Short Description: 42-14-32 LOT 3 FOUNTAINHEAD MB 58 PG 91

Attachment: EXHIBIT A - Inventory List for Affordable Housing (2023-R-58 : Live Local Act - FL Statute 166.0451 - Adopting the Official List

HOLLY HILL
FLORIDA

STAFF REPORT
CITY OF HOLLY HILL, FLORIDA

City Commission
Ordinance

MEETING DATE: **September 26, 2023**
FROM: **Brian Walker**
SUBJECT: **SECOND READING - an Ordinance of the City of Holly Hill, Volusia County Florida, Annexing by Voluntary Petition Approximately .83 Acres Identified as Parcel Numbers 4242-31-01-0291 and 4242-31-01-0290 Contiguous to the City of Holly Hill; Redefining Boundaries of the City of Holly Hill to Include Said Property and the Adjacent Rights-Of-Way of N Nova Road and Old Kings Road; Directing the City Clerk to File the Ordinance with the Clerk of the Circuit Court, with the Chief Administrative Officer of Volusia County and with the Department of State; Providing for Conflicting Ordinances; Providing for Severability; and Providing an Effective Date.**
NUMBER: **2023-O-3063**
APPLICANT: **Brian Walker**
PLANNER:

INTRODUCTION:

This request is to annex parcels totaling approximately .83 acres, located approximately 275 feet south of Flomich Street between N Nova Road and Old Kings Road. The parcels abut one another and the City of Holly Hill and are more specifically known as 1872 N Nova Road and 1888 N Nova Road. (Refer to aerial / location map.) This application precedes a comprehensive plan amendment (CPA-2023-03) and a Rezone (RZ-2023-02).

BACKGROUND:

The parcel known as 1872 N Nova Road contains a building that is approximately 1,250 square feet in size and used an office. While 1888 N Nova Road is a vacant property. The applicant has submitted a petition for voluntary annexation into the City of Holly Hill.

DISCUSSION:

Florida Statutes Section 171.044 shows the requirements for voluntary annexation. The parcels are contiguous to the City limit and are under common ownership. The annexation will result in a City limit that is reasonably compact and does not create an enclave. Therefore, the request meets the statutory requirements.

This request precedes a request for a comprehensive plan amendment and rezone. The proposed comprehensive plan map amendment requests General Commercial future land use, and the proposed rezone requests CC-1 (Corridor Commercial), which is consistent with the abutting properties in the City of Holly Hill.

FINANCIAL IMPACTS:

A minor increase in taxable value is expected.

RECOMMENDATION OF THE BOARD OF PLANNING AND APPEALS:

At its meeting on August 7, 2023, the Board of Planning and Appeals unanimously recommended approval of the requested annexation.

Notification of the proposed annexation has been sent to Volusia County as required, and no objection to the annexation has been received. Additionally, two newspaper notifications of the proposed annexation were published as required by Florida law.

RECOMMENDATION:

Staff Recommends the City Commission annex parcels totaling approximately .83 acres, along with the adjacent rights of way, located approximately 275 feet south of Flomich Street between N Nova Road and Old Kings Road. The parcels abut one another and are more specifically known as 1872 N Nova Road and 1888 N Nova Road.

ATTACHMENTS:

- Aerial Map (PDF)
- Survey (PDF)
- Annexation Consent and Petition (PDF)
- EXHIBIT B - Property Map (PDF)
- PA Info Card - 1872 N Nova Rd (PDF)
- PA Info Card - 1888 N Nova Rd (PDF)

HISTORY:

08/22/23 City Commission APPROVED AT 1ST READING
Next: 09/26/23

Mayor Via opened public participation. No one spoke.

Ordinance No. 2023-3063

SECOND READING - AN ORDINANCE OF THE CITY OF HOLLY HILL, VOLUSIA COUNTY FLORIDA, ANNEXING BY VOLUNTARY PETITION APPROXIMATELY .83 ACRES IDENTIFIED AS PARCEL NUMBERS 4242-31-01-0291 AND 4242-31-01-0290 CONTIGUOUS TO THE CITY OF HOLLY HILL; REDEFINING BOUNDARIES OF THE CITY OF HOLLY HILL TO INCLUDE SAID PROPERTY AND THE ADJACENT RIGHTS-OF-WAY OF N NOVA ROAD AND OLD KINGS ROAD; DIRECTING THE CITY CLERK TO FILE THE ORDINANCE WITH THE CLERK OF THE CIRCUIT COURT, WITH THE CHIEF ADMINISTRATIVE OFFICER OF VOLUSIA COUNTY AND WITH THE DEPARTMENT OF STATE; PROVIDING FOR CONFLICTING ORDINANCES; PROVIDING FOR SEVERABILITY; AND PROVIDING AN EFFECTIVE DATE.

AN ORDINANCE OF THE CITY OF HOLLY HILL, VOLUSIA COUNTY FLORIDA, ANNEXING BY VOLUNTARY PETITION APPROXIMATELY .83 ACRES IDENTIFIED AS PARCEL NUMBERS 4242-31-01-0291 AND 4242-31-01-0290 CONTIGUOUS TO THE CITY OF HOLLY HILL; REDEFINING BOUNDARIES OF THE CITY OF HOLLY HILL TO INCLUDE SAID PROPERTY AND THE ADJACENT RIGHTS-OF-WAY OF N NOVA ROAD AND OLD KINGS ROAD; DIRECTING THE CITY CLERK TO FILE THE ORDINANCE WITH THE CLERK OF THE CIRCUIT COURT, WITH THE CHIEF ADMINISTRATIVE OFFICER OF VOLUSIA COUNTY AND WITH THE DEPARTMENT OF STATE; PROVIDING FOR CONFLICTING ORDINANCES; PROVIDING FOR SEVERABILITY; AND PROVIDING AN EFFECTIVE DATE.

WHEREAS, LFC Holdings FC LLC, owner of the real property described herein; and

WHEREAS, the owner filed, pursuant to Florida Statue 171.044, a petition for voluntary annexation of said property as described in Exhibit A into the municipal limits of the City of Holly Hill; and

WHEREAS, the City Commission of the City of Holly Hill, has determined all of

the property which is proposed to be annexed into the City of Holly Hill is within an unincorporated area of Volusia County, is contiguous to the City of Holly Hill, and is reasonably compact; and

WHEREAS, the map attached hereto as Exhibit B shows the property which is proposed to be annexed into the City of Holly Hill; and

WHEREAS, Exhibit A is the legal description of the property which is proposed to be annexed into the City of Holly Hill.

NOW, THEREFORE, BE IT ORDAINED BY THE CITY COMMISSION OF THE CITY OF HOLLY HILL, FLORIDA:

SECTION 1. The City Commission of the City of Holly Hill, based upon the above findings, hereby annexes into the City of Holly Hill by voluntary petition the following described property:

LEGAL DESCRIPTION: See Attached Exhibit A.

(Tax Parcel Numbers 4242-31-01-0291 and 4242-31-01-0290, and the adjacent rights-of-way of N Nova Road and Old Kings Road)

SECTION 2. The City of Holly Hill city boundary is hereby amended to incorporate the above described property.

SECTION 3. That within seven (7) days of the adoption of this Ordinance, the City Clerk shall file a copy of said Ordinance with the Clerk of the Court, with the Chief Administrative Officer of Volusia County, and with the Department of State.

SECTION 4. That upon approval on first reading, the City Clerk is hereby

directed to publish the Notice of Annexation required by Section 171.044(2), Florida Statues, at least once each week for two (2) consecutive weeks in a newspaper of general circulation in the City of Holly Hill.

SECTION 5. If any section, subsection, sentence, clause, phrase, or portion of this Ordinance, or application hereof, is for any reason held invalid or unconstitutional by any Court, such portion or application shall be deemed a separate, distinct, and independent provision, and such holding shall not affect the validity of the remaining portions or application hereof.

SECTION 6. That all ordinances made in conflict with this Ordinance are hereby repealed.

SECTION 7. That this Ordinance shall become effective immediately upon its adoption.

APPROVED AND AUTHENTICATED on the 26th day of SEPTEMBER 2023 for second and final reading.

EXHIBIT A

LEGAL DESCRIPTION

Parcel Numbers 4242-31-01-0291 and 4242-31-01-0290

THE NORTHERLY 75 FEET OF LOT 29, AND THE SOUTHERLY 20 FEET OF LOT 30, (EXCEPTING THEREFROM THAT PORTION DEEDED FOR HIGHWAY PURPOSES AND EXCEPT THAT PORTION IN ORDER OF TAKING FILED IN OFFICIAL RECORDS BOOK 3742, PAGE 550), BLOCK 1, LARSEN SUBDIVISION, ACCORDING TO THE MAP THEREOF, RECORDED IN MAP BOOK 11, PAGE 252, OF THE PUBLIC RECORDS OF VOLUSIA COUNTY, FLORIDA.

MORE PARTICULARLY DESCRIBED AS: COMMENCE AT THE NORTHWEST CORNER OF LOT 31, BLOCK 1, THENCE S25%%D48'33"E FOR A DISTANCE OF 180 FEET TO POINT OF BEGININNG, SAID POINT BEING 20 FEET NORTHWESTERLY FROM THE SOUTHERLY MOST CORNER OF LOT 30,

BLOCK 1; THENCE CONTINUE S25%%D48'33"E FOR A DISTANCE OF 95 FEET TO A POINT THAT IS 25' NORTHWESTERLY FROM THE SOUTHERLY MOST CORNER OF LOT 29, BLOCK 1; THENCE N64°14'23"E A DISTANCE OF 300 FEET TO A POINT ON THE NORTHEASTERLY BOUNDARY OF LOT 29; THENCE N25°48'33"W FOR A DISTANCE OF 75 FEET TO THE NORTHEREASTERLY CORNER OF LOT 29, BLOCK 1; THENCE S64°14'23"W A DISTANCE OF 100 FEET TO THE EASTERLY MOST CORNER OF LOT 30, BLOCK 1; THENCE N25°48'33"W FOR A DISTANCE OF 20 FEET TO THE NORTH LINE OF THE SOUTH 20 FEET OF LOT 30, BLOCK 1; THENCE S64°14'23"W A DISTANCE OF 200 FEET TO THE POINT OF BEGINNING. EXCEPTING THEREFROM THAT PORTION DEEDED FOR HIGHWAY PURPOSES AND EXCEPT THAT PORTION IN ORDER OF TAKING FILED IN OFFICIAL RECORDS BOOK 3742, PAGE 550), BLOCK 1, LARSEN SUBDIVISION, ACCORDING TO THE MAP THEREOF, RECORDED IN MAP BOOK 11, PAGE 252, OF THE PUBLIC RECORDS OF VOLUSIA COUNTY, FLORIDA.

PARCEL NUMBER: 4242-31-01- 0291

THE SOUTH 25 FEET OF LOT 29, BLOCK 1, LARSEN SUBDIVISION, AS PER MAP IN MAP BOOK 11, PAGE 252, PUBLIC RECORDS OF VOLUSIA COUNTY, FLORIDA, INCLUDING THE NORTH 75 FEET OF UNPLATTED PART ADJOINING SAID LOT ON THE SOUTH, EXCEPT THAT PART TAKEN FOR ROAD RIGHT OF WAY AS SHOWN IN DEED BOOK 558, PAGE 353, AND AS PER DEED RECORDED IN O.R. BOOK 3694, PAGE 1071, OF THE PUBLIC RECORDS OF VOLUSIA COUNTY, FLORIDA.

MOREPARTICULARY DESCRIBED AS: COMMENCE AT THE NORTHWEST CORNER OF LOT 31, BLOCK 1, THENCE S25°48'33"E FOR A DISTANCE OF 275 FEET TO POINT OF BEGININNG, SAID POINT BEING 25 FEET NORTHWESTERLY FROM THE SOUTHERLY MOST CORNER OF LOT 29, BLOCK 1; THENCE CONTINUE S25°48'33"E FOR A DISTANCE OF 100 FEET ALONG THE EXTENSION OF THE SOUTHWESTERLY LOT LINE OF LOT 29, BLOCK 1; THENCE N64°14'23"E A DISTANCE OF 300 FEET TO A POINT ALONG THE EXTENSION LINE OF THE NORTHEASTERLY LOT LINE OF LOT 29, BLOCK 1; THENCE N25°48'33"W FOR A DISTANCE OF 100 FEET TO THE NORTH LINE OF THE SOUTH 25 FEET OF LOT 29, BLOCK 1; S64°14'23"W A DISTANCE OF 300 FEET TO THE POINT OF BEGINNING. EXCEPTING THEREFROM THAT PORTION DEEDED FOR HIGHWAY PURPOSES AND EXCEPT THAT PORTION IN ORDER OF TAKING FILED IN OFFICIAL RECORDS BOOK 3742, PAGE 550), BLOCK 1, LARSEN SUBDIVISION, ACCORDING TO THE MAP THEREOF, RECORDED IN MAP BOOK 11, PAGE 252, OF THE PUBLIC RECORDS OF VOLUSIA COUNTY, FLORIDA.

PARCEL NO. 4242-31-01-0290

Aerial of 1888 and 1872 N Nova Road

1888 includes the small triangular parcel on the east side of N Nova Road



BOUNDARY SURVEY

LEGAL DESCRIPTION:

THE NORTHERLY 75 FEET OF LOT 29, AND THE SOUTHERLY 20 FEET OF LOT 30, (EXCEPTING THEREFROM THAT PORTION DEEDED FOR HIGHWAY PURPOSES AND EXCEPT THAT PORTION IN ORDER OF TAKING FILED IN OFFICIAL RECORDS BOOK 3742, PAGE 550), BLOCK 1, LARSEN SUBDIVISION, ACCORDING TO THE MAP THEREOF, RECORDED IN MAP BOOK 11, PAGE 252, OF THE PUBLIC RECORDS OF VOLUSIA COUNTY, FLORIDA.

MORE PARTICULARLY DESCRIBED AS: COMMENCE AT THE NORTHWEST CORNER OF LOT 31, BLOCK 1, THENCE S25°48'33"E FOR A DISTANCE OF 180 FEET TO POINT OF BEGININNG, SAID POINT BEING 20 FEET NORTHWESTERLY FROM THE SOUTHERLY MOST CORNER OF LOT 30, BLOCK 1; THENCE CONTINUE S25°48'33"E FOR A DISTANCE OF 95 FEET TO A POINT THAT IS 25' NORTHWESTERLY FROM THE SOUTHERLY MOST CORNER OF LOT 29, BLOCK 1; THENCE N64°14'23"E A DISTANCE OF 300 FEET TO A POINT ON THE NORTHEASTERLY BOUNDARY OF LOT 29; THENCE N25°48'33"W FOR A DISTANCE OF 75 FEET TO THE NORTHEREASTERLY CORNER OF LOT 29, BLOCK 1; THENCE S64°14'23"W A DISTANCE OF 100 FEET TO THE EASTERLY MOST CORNER OF LOT 30, BLOCK 1; THENCE N25°48'33"W FOR A DISTANCE OF 20 FEET TO THE NORTH LINE OF THE SOUTH 20 FEET OF LOT 30, BLOCK 1; THENCE S64°14'23"W A DISTANCE OF 200 FEET TO THE POINT OF BEGINNING. EXCEPTING THEREFROM THAT PORTION DEEDED FOR HIGHWAY PURPOSES AND EXCEPT THAT PORTION IN ORDER OF TAKING FILED IN OFFICIAL RECORDS BOOK 3742, PAGE 550), BLOCK 1, LARSEN SUBDIVISION, ACCORDING TO THE MAP THEREOF, RECORDED IN MAP BOOK 11, PAGE 252, OF THE PUBLIC RECORDS OF VOLUSIA COUNTY, FLORIDA. PARCEL NUMBER: 4242-31-01- 0291

THE SOUTH 25 FEET OF LOT 29, BLOCK 1, LARSEN SUBDIVISION, AS PER MAP IN MAP BOOK 11, PAGE 252, PUBLIC RECORDS OF VOLUSIA COUNTY, FLORIDA, INCLUDING THE NORTH 75 FEET OF UNPLATTED PART ADJOINING SAID LOT ON THE SOUTH, EXCEPT THAT PART TAKEN FOR ROAD RIGHT OF WAY AS SHOWN IN DEED BOOK 558, PAGE 353, AND AS PER DEED RECORDED IN O.R. BOOK 3694, PAGE 1071, OF THE PUBLIC RECORDS OF VOLUSIA COUNTY, FLORIDA.

MOREPARTICULARY DESCRIBED AS: COMMENCE AT THE NORTHWEST CORNER OF LOT 31, BLOCK 1, THENCE S25°48'33"E FOR A DISTANCE OF 275 FEET TO POINT OF BEGININNG, SAID POINT BEING 25 FEET NORTHWESTERLY FROM THE SOUTHERLY MOST CORNER OF LOT 29, BLOCK 1; THENCE CONTINUE S25°48'33"E FOR A DISTANCE OF 100 FEET ALONG THE EXTENSION OF THE SOUTHWESTERLY LOT LINE OF LOT 29, BLOCK 1; THENCE N64°14'23"E A DISTANCE OF 300 FEET TO A POINT ALONG THE EXTENSION LINE OF THE NORTHEASTERLY LOT LINE OF LOT 29, BLOCK 1; THENCE N25°48'33"W FOR A DISTANCE OF 100 FEET TO THE NORTH LINE OF THE SOUTH 25 FEET OF LOT 29, BLOCK 1; S64°14'23"W A DISTANCE OF 300 FEET TO THE POINT OF BEGINNING. EXCEPTING THEREFROM THAT PORTION DEEDED FOR HIGHWAY PURPOSES AND EXCEPT THAT PORTION IN ORDER OF TAKING FILED IN OFFICIAL RECORDS BOOK 3742, PAGE 550), BLOCK 1, LARSEN SUBDIVISION, ACCORDING TO THE MAP THEREOF, RECORDED IN MAP BOOK 11, PAGE 252, OF THE PUBLIC RECORDS OF VOLUSIA COUNTY, FLORIDA. PARCEL NO. 4242-31-01-0290

CERTIFIED TO:
COVENANT CLOSING & TITLE SERVICES

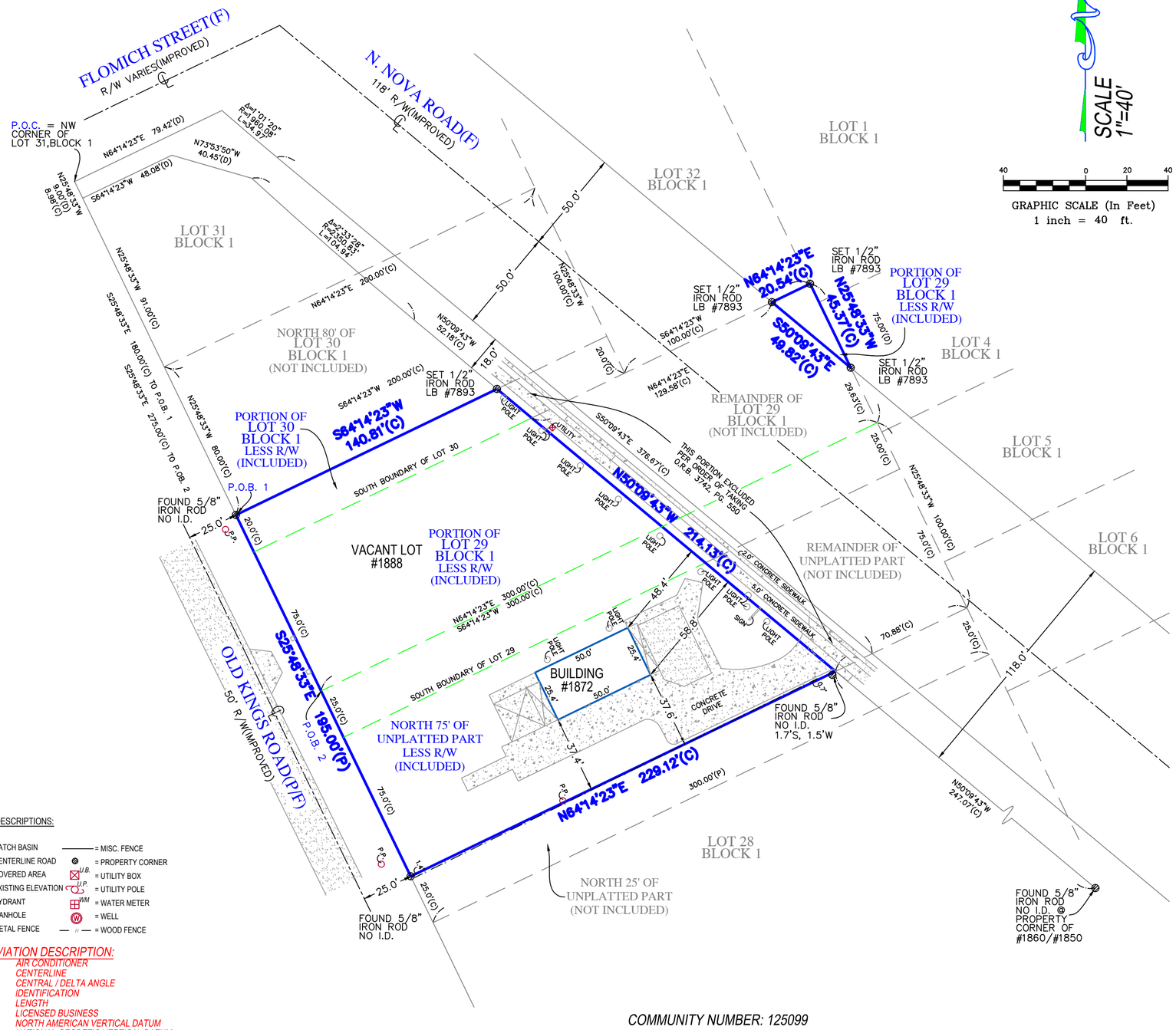

SYMBOL DESCRIPTIONS:

= CATCH BASIN	= MISC. FENCE
= CENTERLINE ROAD	= PROPERTY CORNER
= COVERED AREA	= UTILITY BOX
= EXISTING ELEVATION	= UTILITY POLE
= HYDRANT	= WATER METER
= MANHOLE	= WELL
= METAL FENCE	= WOOD FENCE

ABBREVIATION DESCRIPTION:

A/C	AIR CONDITIONER
℄	CENTERLINE
Δ	CENTRAL / DELTA ANGLE
I.D.	IDENTIFICATION
L	LENGTH
LB	LICENSED BUSINESS
N.A.V.D.	NORTH AMERICAN VERTICAL DATUM
N.G.V.D.	NATIONAL GEODETIC VERTICAL DATUM
OHL	OVERHEAD UTILITIES
P.C.	POINT OF CURVATURE
P.C.C.	POINT OF COMPOUND CURVE
P-K	PARKER KYLON NAIL
P.R.C.	POINT OF REVERSE CURVE
PSM	PROFESSIONAL SURVEYOR MAPPER
P.T.	POINT OF TANGENCY
R	RADIAL / RADIUS
R/W	RIGHT OF WAY

SURVEY NOTES
CONCRETE DRIVE CROSSING OVER PROPERTY LINE ON EASTERLY SIDE OF LOT.

THERE ARE FENCES NEAR THE SOUTHERLY SIDE OF THE PROPERTY.

COMMUNITY NUMBER: 125099
PANEL: 12127C0352
SUFFIX: H
FLOOD ZONE: X
FIELD WORK: 10/22/2021

PROPERTY ADDRESS:
1888/1872 NORTH NOVA ROAD
DAYTONA BEACH, FL 32117

SURVEY NUMBER: 508618

SURVEYORS CERTIFICATE:
I HEREBY CERTIFY THAT THIS BOUNDARY SURVEY IS A TRUE AND CORRECT REPRESENTATION OF A SURVEY PREPARED UNDER MY DIRECTION. NOT VALID WITHOUT A RAISED EMBOSSED SEAL AND SIGNATURE.

(SIGNED) Kenneth J Osborne — Digitally signed by Kenneth J Osborne, Date: 2023.04.03 16:33:24 -04'00'

KENNETH J OSBORNE
PROFESSIONAL SURVEYOR AND MAPPER #6415

REVISIONS:
4/3/23 - ADDED MEETS AND BOUNDS

GENERAL NOTES:

1) LEGAL DESCRIPTION PROVIDED BY OTHERS
2) THE LANDS SHOWN HEREON WERE NOT ABSTRACTED FOR EASEMENTS OR OTHER RECORDED ENCUMBRANCES NOT SHOWN ON THE PLAT.
3) IMPROVEMENTS WERE NOT LOCATED FOR FOOTINGS, FOUNDATIONS OR OTHER IMPROVEMENTS WERE NOT LOCATED.
4) WALL TIES ARE TO THE FACE OF THE WALL AND ARE NOT TO BE USED TO RECONSTRUCT BOUNDARY LINES.
5) ONLY VISIBLE ENCROACHMENTS LOCATED.
6) DIMENSIONS SHOWN ARE PLAT AND MEASURED UNLESS OTHERWISE SHOWN.
7) FENCE OWNERSHIP NOT DETERMINED
8) ELEVATIONS IF SHOWN ARE BASED UPON N.G.V.D. UNLESS OTHERWISE NOTED.
9) IN SOME INSTANCES, GRAPHIC REPRESENTATIONS HAVE BEEN EXAGGERATED TO MORE CLEARLY ILLUSTRATE RELATIONSHIPS BETWEEN PHYSICAL IMPROVEMENTS AND/OR LOT LINES. IN ALL CASES, DIMENSIONS SHALL CONTROL THE LOCATION OF IMPROVEMENTS OVER SCALED POSITIONS.

LB #7893
SERVING FLORIDA
6250 N. MILITARY TRAIL, SUITE 102
WEST PALM BEACH, FL 33407
PHONE (561) 640-4800
STATEWIDE PHONE (800) 226-4807
STATEWIDE FACSIMILE (800) 741-0576
WEBSITE: http://targetsurveying.net

TARGET SURVEYING, LLC

Attachment: Survey (2023-O-3063 : Annexation - 1872 and 1888 N Nova Road)

CITY OF HOLLY HILL

Community Development Department
1065 Ridgewood Avenue, Holly Hill, FL 32117

(386) 248-9442
www.hollyhillfl.org

PETITION/CONSENT FOR ANNEXATION

For Planning Department Use

Application Number _____ *Date Submitted* _____

APPLICANT INFORMATION

This application is being submitted by: ☐ Property Owner ☒ Agent on behalf of Property Owner*

Name	Cobb Cole/Jessica L. Gow, Esquire
Full Address	149 S. Ridgewood Avenue, Suite 700 Daytona Beach, FL 32114
Telephone	386/323-9225
Email	Jessica.Gow@CobbCole.com

* If this application is being submitted by a person other than the property owner, please provide the following Property Owner Information as well as a notarized letter designating you as agent.

PROPERTY OWNER INFORMATION**

Name	LFC Holdings FC, LLC
Full Address	39 Audobon Lane, Flagler Beach, FL 32136
Telephone	386/323-9225
Email	Jessica.Gow@CobbCole.com

** If the property owner does not reside on the property for which the application refers, please provide the following details.

PROPERTY DETAILS***

Full Address	1872 and 1888 N. Nova Road, Daytona Beach, FL 32117
Parcel ID Number	4242-31-01-0290 and 4242-31-01-0291
Subdivision	
Legal Description	See attached.
Total Acreage	
Present Use of Property	Verdego Landscape and Verdego Parking Lot
Number of Residents On Site (if applicable)	N/A

Attachment: Annexation Consent and Petition (2023-O-3063 : Annexation - 1872 and 1888 N Nova Road)

PROPERTY DETAILS(continued)

Existing Structures Located On Site	building on 1872 - 1888 is vacant
County Future Land Use Designation	MXZ
Assessed Property Value	See Attached Property Appraiser Cards
Taxable Value	See Attached Property Appraiser Cards

***Proof of property ownership must be included with this Petition/Consent for Annexation.

REQUEST

Reason for Request	Please see attached cover letter

CERTIFICATION

I hereby certify that the information provided above is true and correct to the best of my knowledge and that I am aware of the application submittal requirements and review process for this application. I hereby authorize the City of Holly Hill Staff to visit my property and to take pictures pertaining to my request. I am aware of the required pre-application meeting and am aware that if all of the required information is not provided, my application will be continued to the next regularly scheduled meeting.

Signature: _____
Jessica L. Gow, Esquire

STATE OF FLORIDA
COUNTY OF VOLUSIA

The foregoing instrument was acknowledged before me this 6 day of June, 2023, by Jessica L. Gow, Esquire, as Attorney (title*) for LFC Holdings FC LLC (name of corporation*), who (_) provided _____ as identification, or (X) who is personally known to me.

DEBORAH D. LACROIX
Commission # HH 237824
Expires April 8, 2026

_____
Notary Public, State of Florida
My Commission Expires:

* If you are executing this document on behalf of a corporation please complete the spaces with your title and the name of your company as indicated.

Attachment: Annexation Consent and Petition (2023-O-3063 : Annexation - 1872 and 1888 N Nova Road)

EXHIBIT B
PROPERTY MAP



Attachment: EXHIBIT B - Property Map (2023-O-3063 : Annexation - 1872 and 1888 N Nova Road)

Volusia County Property Appraiser
123 W. Indiana Ave., Rm. 102
DeLand, FL. 32720
Phone: (386) 736-5901 Web: vcpa.vcgov.org

AltKey: 3194802 **Parcel ID: 424231010290**
LFC HOLDINGS FC LLC **1872 N NOVA RD, DAYTONA BEACH, FL**

Parcel Summary

Alternate Key:	3194802
Parcel ID:	424231010290
Township-Range-Section:	14 - 32 - 42
Subdivision-Block-Lot:	31 - 01 - 0290
Owner(s):	LFC HOLDINGS FC LLC - FS - Fee Simple - 100%
Mailing Address On File:	39 AUDOBON LN FLAGLER BEACH FL 32136
Physical Address:	1872 N NOVA RD, DAYTONA BEACH 32117
Property Use:	1700 - OFFICE 1 STORY
Tax District:	200-UNINCORPORATED - NORTHEAST
2022 Final Millage Rate:	18.2602
Neighborhood:	7060
Business Name:	VERDEGO LANDSCAPE
Subdivision Name:	
Homestead Property:	No

Attachment: PA Info Card - 1872 N Nova Rd (2023-O-3063 : Annexation - 1872 and 1888 N Nova Road)

Volusia County Property Appraiser
123 W. Indiana Ave., Rm. 102
DeLand, FL. 32720
Phone: (386) 736-5901 Web: vcpa.vcgov.org

AltKey: 3194811 **Parcel ID: 424231010291**
LFC HOLDINGS FC LLC **1888 N NOVA RD, DAYTONA BEACH, FL**

Parcel Summary

Alternate Key:	3194811
Parcel ID:	424231010291
Township-Range-Section:	14 - 32 - 42
Subdivision-Block-Lot:	31 - 01 - 0291
Owner(s):	LFC HOLDINGS FC LLC - FS - Fee Simple - 100%
Mailing Address On File:	39 AUDOBON LN FLAGLER BEACH FL 32136
Physical Address:	1888 N NOVA RD, DAYTONA BEACH 32117
Property Use:	1000 - VACANT COMM
Tax District:	200-UNINCORPORATED - NORTHEAST
2022 Final Millage Rate:	18.2602
Neighborhood:	7060
Business Name:	VERDEGO-PARKING LOT
Subdivision Name:	
Homestead Property:	No

Attachment: PA Info Card - 1888 N Nova Rd (2023-O-3063 : Annexation - 1872 and 1888 N Nova Road)