CITY OF HOLLY HILL, FLORIDA

CITY COMMISSION

AGENDA ● JUNE 25, 2019

City Commission Chamber	Regular City Commission Meeting	7:00 PM

CITY HALL
1065 RIDGEWOOD AVENUE
HOLLY HILL, FL 32117

City Clerk's office: (386) 248-9441 - Fax: (386) 248-9448

City Commission Chamber
City Hall
1065 Ridgewood Avenue
Holly Hill, FL 32117

CITY COMMISSION MEMBERS

Mayor
Chris Via

District 1 - Commissioner
John Penny

District 2 - Commissioner
Penny Currie

District 3 - Commissioner
John C. Danio

District 4 - Commissioner
Roy Johnson

CITY MANAGER
Joseph Forte

CITY CLERK
Valerie Manning

1. CALL TO ORDER

a. Roll Call
b. Invocation
c. Pledge of Allegiance

2. POSITIVITY AWARD - NONE

3. PUBLIC COMMENTS

4. APPROVAL OF MINUTES

1. Minutes - June 11, 2019, Regular City Commission Meeting

   (Requested by Valerie Manning, City Clerk)

5. CONSENT AGENDA - ITEMS (1 - 3)

The action proposed is stated for each item on the Consent Agenda. Unless a City Commissioner removes an item from the Consent Agenda, no discussion on individual items will occur and a single motion will approve all items. Is there anyone in the audience who wishes to speak on any item on the Consent Agenda?

1. Resolution –2019-R-38 A Resolution of the City Commission of the City of Holly Hill, Florida, Approving a Contract with Danus Utilities, Inc., for the Award of the Base Bid and Alternate 1 in the Amount of $261,130.00, for the "Rehabilitation of Lift Station #13 (CDBG)" and Authorizing the City Manager to Award and Execute the Agreement with Danus Utilities, Inc.; Providing for Severability; and Providing for an Effective Date.

   (Requested by Antoine Khoury, Public Works)

2. Resolution –2019-R-39 A Resolution of the City Commission of the City of Holly Hill, Florida, Authorizing the City Manager to Sign a One Year Lease Agreement Extension Between the City of Holly Hill and the Volusia/Flagler YMCA; Establishing the Terms of This Agreement; Providing for Severability; and Providing for an Effective Date.

   (Requested by Joseph Forte, City Manager)

3. Employee Benefits Insurance Agent of Record Services

   (Requested by Valerie Manning, City Clerk)

6. REGULAR AGENDA

1. Resolution –2019-R-40 A Resolution of the City Commission of the City of Holly Hill, Volusia County, Florida, Amending the Adopted Budget for the City of Holly Hill for the Fiscal Year 2018-2019; Providing for Severability; and Providing for an Effective Date.

   (Requested by Valerie Manning, City Clerk)

7. PUBLIC HEARINGS - NONE

Please silence any cell phone, pager or noise making device as not to interrupt the meeting. Staff will introduce each item for consideration, with comments and recommendations. The applicant or appellant and supporters will be heard first. Those in opposition to the request will be heard next. Comments should be restricted to pertinent information regarding the agenda item under discussion. Out of courtesy to others, we ask that speakers keep their comments brief and try to limit these comments to information not previously discussed. Speakers should state their name and address clearly for the record. The City Clerk's office is required to retain any documents, photographs, drawings, etc. that are shown to the City Commissioners in support of a position. The City Commission may ask questions of speakers or of staff members. The Mayor will then ask the City Commission to make a recommendation or motion. Once a motion has been made and seconded, discussion will be closed to the floor. Following City Commission discussion, a vote will be taken. During voting, Commissioners who do not cast objecting votes are considered to have voted in support of the motion.

8. COMMUNICATIONS

A. City Manager & Staff Comments
B. City Attorney Comments
C. City Commission Comments
D. Mayor's Comments

9. ADJOURNMENT

Website Address – www.hollyhillfl.org (City Clerk)

NOTICE – If any person decides to appeal any decision of the City Commission at this meeting, he/she will need a record of the proceedings and, for that purpose, he/she may need to ensure that a verbatim record of the proceedings is made, which record includes the testimony and evidence upon which the appeal is to be based. The City does not prepare or provide such a record.

For special accommodations, please notify the City Clerk's Office at least 72 hours in advance. (386) 248-9441

Help for the hearing impaired is available through the Assistive Listening System. Receivers can be obtained from the City Clerk's Office.

In accordance with the Americans with Disabilities Act (ADA), persons needing a special accommodation to participate in the Commission proceedings should contact the City Clerk's Office no later than three (3) days prior to the proceedings.

STAFF REPORT
CITY OF HOLLY HILL, FLORIDA

City Commission
Agenda Item

MEETING DATE:	**June 25, 2019**
FROM:	**Valerie Manning**
SUBJECT:	**Minutes - June 11, 2019, Regular City Commission Meeting**
NUMBER:	**(ID # 2554)**
APPLICANT:	
PLANNER:	

DISCUSSION:

Minutes from the June 11, 2019 regular City Commission meeting.

MOTION:

Approve as submitted by staff.

- Minutes - June 11, 2019 - Regular City Commission meeting (PDF)

CITY OF HOLLY HILL, FLORIDA

CITY COMMISSION

MINUTES ● JUNE 11, 2019

City Commission Chamber **Regular City Commission Meeting** **7:00 PM**

CITY HALL
1065 RIDGEWOOD AVENUE
HOLLY HILL, FL 32117

City Clerk's office: (386) 248-9441 - Fax: (386) 248-9448

1. CALL TO ORDER

a. Roll Call

Attendee Name	Title	Status	Arrived
Chris Via	Mayor	Present	
John Penny	District 1 - Commissioner	Present	
Penny Currie	District 2 - Commissioner	Present	
John C. Danio	District 3 - Commissioner	Present	
Roy Johnson	District 4 - Commissioner	Present	

b. Invocation
Commissioner Danio led the invocation.

c. Pledge of Allegiance
Mayor Via led the Pledge of Allegiance to the Flag.

2. POSITIVITY AWARD - NONE

3. PUBLIC COMMENTS

The following individuals spoke to the Mayor and City Commissioners:

Lynne Smith, 107 7th Street, Holly Hill, mentioned that there is good progress being made at the boat ramp construction at Sunrise Park; the channel is now marked and it was asked of her who is responsible for putting or the markings on that? Is it the city to the contractor or is it the waterway folks because of the boats passing through there and the potential danger for that.

Commissioner Penny stated most channel markers are not illuminated.

Mr. Forte stated he doesn't know, he will have to find out.

Mrs. Smith stated since President Trump released the aide money, any chance of the city getting its FEMA money faster?

Mr. Forte stated staff is still fighting for that every month.

Mrs. Smith stated and her standard monthly, they are now six months into the sign

Attachment: Minutes - June 11, 2019 - Regular City Commission meeting (2554 : Minutes)

compliance on US1. Have any people applied for the sign grant?

Mr. Forte stated, no. They have until July 8th he believes. He doesn't suspect anybody, at this point, will but the day after that deadline date they will be given notices to appear if they are not in compliance.

Jim Schultz, 117 Harvard Drive, Ormond Beach, shared his concerns about mumps in the Alachua County; fluoride issues.

Heidi Heller, 460 Ridgewood Avenue, Holly Hill, stated she noticed the tarring going on, on the condo complexes, the north west corner of LPGA and Center Avenue and she is thinking maybe the city had something to do with it and she's glad to see it. Thank you.

Necolen Green, 722 North Flamingo Avenue, Holly Hill, stated appreciates the water work that is being done over there in the neighborhood but there are some complaints from some of the people pertaining to the drainage ditches, driveways are not being put back exactly the way they were, hers is shorter than before, her irrigation system got tore up and she's having to redo that, and one of her neighbors on her street has a brand new concrete driveway that she didn't pay for. She feels if they are going to replace one driveway with concrete, they should replace the whole street with concrete. The house whose driveway was replaced is 712 North Flamingo Avenue.

Mr. Forte stated he's been speaking with a lot of the residents both on Flamingo and Lakewood with regards to the contractor. The superintendent on the job site is probably not the best person to have as a contact for the residents. Mr. Forte mentioned he has been talking to Walt Smyser about it. Anybody who's driveway was removed is supposed to be replaced with a "like" driveway. If there was nothing in place of a driveway, the contractor has the ability if a private property owner wants to pay the contractor to do a driveway while they're there, they can do that. He was informed about this other driveway that became concrete and it has nothing to do with the city. If the contractor wanted to do this woman a favor, it has nothing to do with the city's contract. It did not come out of city funds. It had nothing to do with the city's contract, nothing to do with the city's money. This guy wanted to be nice to this woman, he can't help that. He can't help what a private contractor does with a private citizen outside the four corners of the city's contract. He has no control over that.

4. APPROVAL OF MINUTES

1.

Minutes - May 28, 2019 Regular City Commission and CRA Meeting

(Requested by Valerie Manning, City Clerk)

RESULT:	**APPROVED [UNANIMOUS]**
MOVER:	Penny Currie, District 2 - Commissioner
SECONDER:	John C. Danio, District 3 - Commissioner
AYES:	Via, Penny, Currie, Danio, Johnson

Enacted and approved this 11th day of June, 2019, in Holly Hill

Attachment: Minutes - June 11, 2019 - Regular City Commission meeting (2554 : Minutes)

5. CONSENT AGENDA - ITEMS (1 - 5)

Mayor Via asked if there was anyone in the audience who wished to speak on any item on the Consent Agenda or if any member of the Commission would like to pull an item for further discussion. There was no one.

1. 2019-R-35 Resolution

A Resolution of the City Commission of the City of Holly Hill, Florida, Authorizing the City Manager, in Coordination with the Pickleball Daytona at Holly Hill, to Apply to the Racing and Recreational Facilities District for a Grant in the Amount of $50,000 for the Construction of the Public Amenities Located at the Pictona Facility; Providing for Severability; and Providing for an Effective Date.

(Requested by Valerie Manning, City Clerk)

RESULT:	**ADOPTED [UNANIMOUS]**
MOVER:	John C. Danio, District 3 - Commissioner
SECONDER:	Penny Currie, District 2 - Commissioner
AYES:	Via, Penny, Currie, Danio, Johnson

RESOLUTION
2019-R-35
A RESOLUTION OF THE CITY COMMISSION OF THE CITY OF HOLLY HILL, FLORIDA, AUTHORIZING THE CITY MANAGER, IN COORDINATION WITH THE PICKLEBALL DAYTONA AT HOLLY HILL, TO APPLY TO THE RACING AND RECREATIONAL FACILITIES DISTRICT FOR A GRANT IN THE AMOUNT OF $50,000 FOR THE CONSTRUCTION OF THE PUBLIC AMENITIES LOCATED AT THE PICTONA FACILITY; PROVIDING FOR SEVERABILITY; AND PROVIDING FOR AN EFFECTIVE DATE.

A RESOLUTION OF THE CITY COMMISSION OF THE CITY OF HOLLY HILL, FLORIDA, AUTHORIZING THE CITY MANAGER, IN COORDINATION WITH THE PICKLEBALL DAYTONA AT HOLLY HILL, TO APPLY TO THE RACING AND RECREATIONAL FACILITIES DISTRICT FOR A GRANT IN THE AMOUNT OF $50,000 FOR THE CONSTRUCTION OF THE PUBLIC AMENITIES LOCATED AT THE PICTONA FACILITY; PROVIDING FOR SEVERABILITY; AND PROVIDING FOR AN EFFECTIVE DATE.

WHEREAS, Through a public-private partnership the Pickleball Daytona at Holly Hill is building 24 courts, 8 of which will be covered, at Hollyland Park, Holly Hill; and

WHEREAS, a Healthy Living program has been developed by city staff and will start in September 2018 being facilitated and coordinated with the YMCA, Florida Health Care

Attachment: Minutes - June 11, 2019 - Regular City Commission meeting (2554 : Minutes)

Plans and Halifax Hospital; and

WHEREAS, Pickleball Daytona at Holly Hill will operate the not-for-profit facility called Pictona (a contraction of PICkleball + DayTONA). Pictona will have outstanding amenities including a restaurant called the "Kitchen," and a clubhouse featuring locker rooms, a player shop, lounge, game room for table tennis, a senior center and other recreational games which will host a variety of social events and physical activities; and

WHEREAS, Pickleball Daytona at Holly Hill will offer instructional programs for all age groups as well as recreational and competitive play, including tournaments.

NOW, THEREFORE, BE IT RESOLVED BY THE CITY COMMISSION OF THE CITY OF HOLLY HILL, FLORIDA:

SECTION 1. That the City Commission of the City of Holly Hill does hereby authorize the City Manager, in coordination with the Pickleball Daytona at Holly Hill club, to apply for a grant to the Racing and Recreational Facilities District in the amount of $50,000.

SECTION 2. That the City Commission of the City of Holly Hill does hereby support the development of Pictona and all the associated amenities.

SECTION 3. SEVERABILITY. If any section or portion of a section of this Resolution proves to be invalid, unlawful, or unconstitutional, it shall not be held to invalidate or impair the validity, force, or effect of any other section or part of this Resolution.

SECTION 4. EFFECTIVE DATE. This Resolution shall take effect immediately upon its adoption.

APPROVED AND AUTHENTICATED on this 11th day of JUNE, 2019.

Enacted and approved this 11th day of June, 2019, in Holly Hill

2. –2019-R-36 Resolution

A Resolution of the City Commission of the City of Holly Hill, Florida, to Approve and Award the Agreements with Tetra Tech, Inc., Thompson Consulting Services, and Rostan Solutions, LLC, for Emergency Debris Monitoring Services; Authorizing the City Manager to Execute the Agreements; Providing for Severability; and Providing for an Effective Date.

(Requested by Antoine Khoury, Public Works)

Attachment: Minutes - June 11, 2019 - Regular City Commission meeting (2554 : Minutes)

RESULT:	**ADOPTED [UNANIMOUS]**
MOVER:	John C. Danio, District 3 - Commissioner
SECONDER:	Penny Currie, District 2 - Commissioner
AYES:	Via, Penny, Currie, Danio, Johnson

RESOLUTION
2019-R-36
A RESOLUTION OF THE CITY COMMISSION OF THE CITY OF HOLLY HILL, FLORIDA, TO APPROVE AND AWARD THE AGREEMENTS WITH TETRA TECH, INC., THOMPSON CONSULTING SERVICES, AND ROSTAN SOLUTIONS, LLC, FOR EMERGENCY DEBRIS MONITORING SERVICES; AUTHORIZING THE CITY MANAGER TO EXECUTE THE AGREEMENTS; PROVIDING FOR SEVERABILITY; AND PROVIDING FOR AN EFFECTIVE DATE.

A RESOLUTION OF THE CITY COMMISSION OF THE CITY OF HOLLY HILL, FLORIDA, TO APPROVE AND AWARD THE AGREEMENTS WITH TETRA TECH, INC., THOMPSON CONSULTING SERVICES, AND ROSTAN SOLUTIONS, LLC FOR EMERGENCY DEBRIS MONITORING SERVICES; AUTHORIZING THE CITY MANAGER TO EXECUTE THE AGREEMENT; PROVIDING FOR SEVERABILITY; AND PROVIDING FOR AN EFFECTIVE DATE.

WHEREAS, the City has issued a Joint Procurement Request for Proposal (RFP) with the Cities of South Daytona and New Smyrna Beach to seek qualified contractors to provide Emergency Debris Monitoring Services for the three cities; and

WHEREAS, seven firms submitted qualifications and cost for this work; and

WHEREAS, an Evaluation Committee met in a properly noticed public meeting and reviewed the qualification of the submitting firms and upon final review recommend that Tetra Tech, Inc., Thompson Consulting Services, and Rostan Solutions, LLC be issued contingency contracts for Emergency Debris Monitoring Services.

NOW, THEREFORE, BE IT RESOLVED BY THE CITY COMMISSION OF THE CITY OF HOLLY HILL, FLORIDA:

SECTION 1. That the City Commission of the City of Holly Hill does hereby authorize the City Manager to enter into agreements and award contingency contracts to Tetra Tech, Inc., Thompson Consulting Services, and Rostan Solutions, LLC for Emergency Debris Hauling & Disposal Services.

SECTION 2. SEVERABILITY. If any section or portion of a section of this Resolution proves to be invalid, unlawful, or unconstitutional, it shall not be held to invalidate or impair the validity, force, or effect of any other section or part of this Resolution.

SECTION 3. EFFECTIVE DATE. This Resolution shall take effect immediately upon its adoption.

APPROVED AND AUTHENTICATED on this 11th day of JUNE, 2019.

Attachment: Minutes - June 11, 2019 - Regular City Commission meeting (2554 : Minutes)

Enacted and approved this 11th day of June, 2019, in Holly Hill

3. –2019-R-37 Resolution

A Resolution of the City Commission of the City of Holly Hill, Florida, to Approve and Award the Agreement and Authorize Execution with Crowder Gulf, Ceres Environmental Services, and Philips & Jordan, Inc., for Emergency Debris Hauling & Disposal Services; Authorizing the City Manager to Execute the Agreement; Providing for Severability; and Providing for an Effective Date.

(Requested by Antoine Khoury, Public Works)

RESULT:	**ADOPTED [UNANIMOUS]**
MOVER:	John C. Danio, District 3 - Commissioner
SECONDER:	Penny Currie, District 2 - Commissioner
AYES:	Via, Penny, Currie, Danio, Johnson

RESOLUTION
2019-R-37
A RESOLUTION OF THE CITY COMMISSION OF THE CITY OF HOLLY HILL, FLORIDA, TO APPROVE AND AWARD THE AGREEMENT AND AUTHORIZE EXECUTION WITH CROWDER GULF, CERES ENVIRONMENTAL SERVICES, AND PHILIPS & JORDAN, INC., FOR EMERGENCY DEBRIS HAULING & DISPOSAL SERVICES; AUTHORIZING THE CITY MANAGER TO EXECUTE THE AGREEMENT; PROVIDING FOR SEVERABILITY; AND PROVIDING FOR AN EFFECTIVE DATE.

A RESOLUTION OF THE CITY COMMISSION OF THE CITY OF HOLLY HILL, FLORIDA, TO APPROVE AND AWARD THE AGREEMENT AND AUTHORIZE EXECUTION WITH CROWDER GULF, CERES ENVIRONMENTAL SERVICES, AND PHILIPS & JORDAN, INC., FOR EMERGENCY DEBRIS HAULING & DISPOSAL SERVICES; AUTHORIZING THE CITY MANAGER TO EXECUTE THE AGREEMENT; PROVIDING FOR SEVERABILITY; AND PROVIDING FOR AN EFFECTIVE DATE.

WHEREAS, the City has issued a Joint Procurement Request for Proposal (RFP) with the cities of South Daytona and New Smyrna Beach to seek qualified contractors to provide Emergency Debris Hauling & Disposal services for the three cities; and

WHEREAS, eleven firms submitted qualifications and cost for this work; and

WHEREAS, an Evaluation Committee met in a properly noticed public meeting and reviewed the qualifications of the submitting firms; and

WHEREAS, the Evaluation committee unanimously recommend Crowder Gulf, Ceres Environmental Services, and Philips & Jordan, Inc., be issued contingency contracts for

Attachment: Minutes - June 11, 2019 - Regular City Commission meeting (2554 : Minutes)

Emergency Debris Hauling & Disposal services.

NOW, THEREFORE, BE IT RESOLVED BY THE CITY COMMISSION OF THE CITY OF HOLLY HILL, FLORIDA:

SECTION 1. The City Commission of the City of Holly Hill does hereby authorize the City Manager to enter into agreements with and issue contingency contracts for Emergency Debris Hauling & Disposal Services per the terms and conditions of RFP 19-PW-16 and sign all necessary agreements with Crowder Gulf, Ceres Environmental Services and Philips & Jordan, Inc.

SECTION 2. SEVERABILITY. If any section or portion of a section of this Resolution proves to be invalid, unlawful, or unconstitutional, it shall not be held to invalidate or impair the validity, force, or effect of any other section or part of this Resolution.

SECTION 3. EFFECTIVE DATE. This Resolution shall take effect immediately upon its adoption.

APPROVED AND AUTHENTICATED on this 11th day of JUNE, 2019.

Enacted and approved this 11th day of June, 2019, in Holly Hill

4.

Hydra Service Purchase Authorization

(Requested by Stella Gurnee, Finance)

RESULT:	**APPROVED [UNANIMOUS]**
MOVER:	John C. Danio, District 3 - Commissioner
SECONDER:	Penny Currie, District 2 - Commissioner
AYES:	Via, Penny, Currie, Danio, Johnson

Enacted and approved this 11th day of June, 2019, in Holly Hill

5.

SunTrust Deposit Account Resolution and Authorization for Business Entities

(Requested by Stella Gurnee, Finance)

RESULT:	**APPROVED [UNANIMOUS]**
MOVER:	John C. Danio, District 3 - Commissioner
SECONDER:	Penny Currie, District 2 - Commissioner
AYES:	Via, Penny, Currie, Danio, Johnson

Enacted and approved this 11th day of June, 2019, in Holly Hill

6. REGULAR AGENDA

1.

Request for Lien Reduction for 903 Magnolia Avenue

(Requested by Joseph Forte, City Manager)
Mayor Via opened public participation. No one spoke.

RESULT:	**APPROVED [UNANIMOUS]**
MOVER:	John Penny, District 1 - Commissioner
SECONDER:	Penny Currie, District 2 - Commissioner
AYES:	Via, Penny, Currie, Danio, Johnson

Enacted and approved this 11th day of June, 2019, in Holly Hill

2.

Request for Lien Reduction for 928 Avondale Avenue

(Requested by Joseph Forte, City Manager)
Mayor Via opened public participation. No one spoke.

RESULT:	**APPROVED [UNANIMOUS]**
MOVER:	Roy Johnson, District 4 - Commissioner
SECONDER:	Penny Currie, District 2 - Commissioner
AYES:	Via, Penny, Currie, Danio, Johnson

Enacted and approved this 11th day of June, 2019, in Holly Hill

7. PUBLIC HEARINGS - NONE

8. COMMUNICATIONS

A. City Manager & Staff Comments
Mr. Forte gave an update on the Pickleball at Hollyland Park. Staff is probably going to close the park beginning June 17th. What he would like to do between now and the following Monday is open up the buildings that are on the property for both the Police Chief and the Fire Chief to do some training exercises in those vacant buildings. They will have all of next week to do some kind of training and then the following Monday, June 24th the Pickleball contractors will start to put up the chain link fence to section off that property and would like to get that posted as a construction site/no trespassing. There comes some complications with this and he will get with the Chamber of Commerce and the Historic Society tomorrow because they're going to lose their parking during this construction period. Rose, Rentha and Dean will probably be able to pull into the

Attachment: Minutes - June 11, 2019 - Regular City Commission meeting (2554 : Minutes)

driveway and make a quick right and park on the old Chamber slab but the parking in the rear of those buildings are not going to be there anymore during the construction period. People will have to park at City Hall and walk across the street in order to get to the Chamber and the Historic Society. Moving forward as the construction starts, they will have team meetings twice a month which will be here at City Hall so they can be updated on everything going on with the facility. Staff is still working towards the Racing and Recreational Facilities District grant for some of the amenities that the city is building, staff is still going to apply for an ECHO grant, although the timing on that is not going to be favorable to the project. The city still has Teresa Rand that's working on other fundraising activities. It's certainly moving forward and there's a lot of enthusiasm and he just wanted the Commission know what's happening for now.

B. City Attorney Comments
Not present at tonight's meeting.

C. City Commission Comments
Commissioner Johnson mentioned that the city still has some room for development; encouraged people to become a member of the Rotary Club and the Daytona Beach Regional Chamber of Commerce can contact Jim Cameron.

Commissioner Penny informed the upcoming annual fundraiser for Urban Surf 4 Kids being held on June 22nd. Asked if staff can look into the intersection of 10th Street and US1 due to accidents and possibly putting up a RIGHT TURN ONLY sign or something.

Commissioner Currie thanked Police Officers Knight and Culver for engaging with the community recently and all the officers that are doing that.

Jim Cameron from the Daytona Beach Regional Chamber of Commerce informed the Mayor and Commissioners that they are starting their process for developing their 2020 Legislative Session recommendations. Please note that next year's session will start January 14, 2020. They will be going up there for Volusia Days at The Capital January 15th and 16th. Committee week starts up in Tallahassee in September 2019 and he's guessing the Volusia Delegation will meet in October/November 2019 to hear recommendations from Volusia County.

D. Mayor's Comments
Mayor Via mentioned that himself and Mr. Forte went to MG on The Halifax for a Q&A update about what's going on in the city; attended the Elected Officials Roundtable meeting today; congratulated and thanked Officers Knight and Culver for their heartfelt extra duties to the community; informed the Commissioners that the city received a Certificate of Appreciation for hosting the Child Abuse Prevention Month.

9. ADJOURNMENT

The meeting adjourned at approximately 7:45 PM.

Attachment: Minutes - June 11, 2019 - Regular City Commission meeting (2554 : Minutes)

HOLLY HILL
FLORIDA

STAFF REPORT
CITY OF HOLLY HILL, FLORIDA

City Commission
Resolution

MEETING DATE: **June 25, 2019**
FROM: **Antoine Khoury**
SUBJECT: **A Resolution of the City Commission of the City of Holly Hill, Florida, Approving a Contract with Danus Utilities, Inc., for the Award of the Base Bid and Alternate 1 in the Amount of $261,130.00, for the "Rehabilitation of Lift Station #13 (CDBG)" and Authorizing the City Manager to Award and Execute the Agreement with Danus Utilities, Inc.; Providing for Severability; and Providing for an Effective Date.**
NUMBER: **2019-R-38**
APPLICANT:
PLANNER:

DISCUSSION:

During an evaluation of the City's lift stations it was determined that Lift Station #13, located at 397 Dubbs Drive, is in need of refurbishment. This lift station is over 50 years old and has not had any significant upgrades or improvements in that time. This lift station is located within the eligible improvement area of the Community Development Block Grant (CDBG) and was approved by the City Commission as the City's FY 2018-2019 project.

The proposed refurbishment will include removal and replacement of structural, mechanical, electrical, and control components. In addition, the emergency generator for Lift Station 28 will be relocated to this station Lift Station #13. The proposed refurbishment is consistent with the need to upgrade facilities to reach full compliance with Department of Environmental Protection standards and protect health, safety and welfare of our citizens.

The City received eleven (11) bids for this project and the low bidder is Danus Utilities, Inc. Staff and the City's consultant have reviewed Danus Utilities, Inc.'s bid package and have found it responsive and is qualified to complete this project.

FISCAL ANALYSIS:

Bids were opened at 2:00 pm on Thursday, June 6, 2019. Danus Utilities, Inc., submitted the lowest total bid; the base bid is $240,430.00 and bid Alternate 1 is $20,700 for a total bid of $261,130.00.

$453.200.00 was budgeted in infrastructure account 407-8110-530-6300.

STAFF RECOMMENDATION:

Authorize the City Manager to award and execute a contract with Danus Utilities, Inc., for the award of the Base Bid and Alternate 1 in the amount of $261,130.00, for the improvements to Lift Station #13 Rehabilitation.

COMMISSION GOAL:

Goal #1: Develop and maintain a sound and sustainable financial plan for the city that establishes sufficient reserves for all funds, ensures (whenever possible) that user fees pay for services rendered, provides a realistic capital improvement program, and encourages public/private sector partnerships and intergovernmental partnerships.

Goal #4: Provide proficient public health and safety services in terms of police and fire protection, water, storm water, waste water and solid waste management and disaster preparedness with a focus on intergovernmental collaboration, private sector partnerships, and utilization of technologies and proven innovations.

MOTION:

APPROVING AND AWARDING DANUS UTILITIES, INC., A CONTRACT FOR THE BID AND ALTERNATE 1 IN THE AMOUNT OF $261,130.00, FOR THE "REHABILITATION OF LIFT STATION #13 (CDBG)" AND AUTHORIZING THE CITY MANAGER TO EXECUTE THE AGREEMENT.

ATTACHMENTS:

- Danus Proposal (PDF)
- Holly Hill LS_13 Rehabilitation_Bid Set Plans (PDF)
- Holly Hill LS_13 Rehabilitation_Bid Set Specifications_04.30.19 (PDF)
- Bid Opening Tally Sheet 6.6.19 (PDF)
- Holly Hill Lift Station 13 Rehab_CS_GP_City of Holly Hill (PDF)
- Holly Hill Lift Station 13 - Addendum 1 (PDF)
- Holly Hill Lift Station 13 - Addendum 2 (PDF)
- Holly Hill Lift Station 13 - Addendum 3 (PDF)
- Holly Hill Lift Station 13 - Addendum 4 (PDF)

Resolution No. 2019-38

A RESOLUTION OF THE CITY COMMISSION OF THE CITY OF HOLLY HILL, FLORIDA, APPROVING A CONTRACT WITH DANUS UTILITIES, INC., FOR THE AWARD OF THE BASE BID AND ALTERNATE 1 IN THE AMOUNT OF $261,130.00, FOR THE "REHABILITATION OF LIFT STATION #13 (CDBG)" AND AUTHORIZING THE CITY MANAGER TO AWARD AND EXECUTE THE AGREEMENT WITH DANUS UTILITIES, INC.; PROVIDING FOR SEVERABILITY; AND PROVIDING FOR AN EFFECTIVE DATE.

A RESOLUTION OF THE CITY COMMISSION OF THE CITY OF HOLLY HILL, FLORIDA, APPROVING A CONTRACT WITH DANUS UTILITIES, INC., FOR THE AWARD OF THE BASE BID AND ALTERNATE 1 IN THE AMOUNT OF $261,130.00, FOR THE "REHABILITATION OF LIFT STATION #13 (CDBG)" AND AUTHORIZING THE CITY MANAGER TO AWARD AND EXECUTE THE AGREEMENT WITH DANUS UTILITIES, INC."; AND PROVIDING FOR SEVERABILITY; AND PROVIDING FOR AN EFFECTIVE DATE.

WHEREAS, During an evaluation of the City's lift stations it was determined that Lift Station #13, located at 397 Dubbs Drive, is in need of refurbishment; and

WHEREAS, This lift station is over 50 years old and has not had any significant upgrades or improvements in that time; and

WHEREAS, This lift station is located within the eligible improvement area of the Community Development Block Grant (CDBG); and

WHEREAS, This lift station was approved by the City Commission as the City's FY 2018-2019 CDBG Project; and

WHEREAS, as low responsive/responsible bidder, Danus Utilities, Inc., has submitted a base bid and alternate 1 in the amount of $261,130.00 to the City of Holly Hill to rehabilitate Lift Station #13: and

WHEREAS, the City's consultant and City staff have evaluated and find the proposal to rehabilitate Lift Station #13 to be acceptable.

NOW, THEREFORE, BE IT RESOLVED BY THE CITY COMMISSION OF THE CITY OF HOLLY HILL, FLORIDA:

SECTION 1. Approve a contract with Danus Utilities, Inc. and authorize the City Manager to award and execute a contract with Danus Utilities, Inc., for $261,130.00 for the "Rehabilitation of Lift Station #13 (CDBG)."

SECTION 2. SEVERABILITY. If any section or portion of a section of this Resolution proves to be invalid, unlawful, or unconstitutional, it shall not be held to invalidate or impair the validity, force, or effect of any other section or part of this Resolution.

SECTION 3. EFFECTIVE DATE. This Resolution shall take effect immediately upon its adoption.

APPROVED AND AUTHENTICATED on this 25th day of JUNE, 2019.

SECTION 00 30 00
PROPOSAL

FOR

CITY OF HOLLY HILL
LIFT STATION #13 REHABILITATION
BID NO. 19WW05
(To be completed in Duplicate)

Bidder's Name: Danus Utilities, Inc

Submitted: June 6, 2019

City of Holly Hill
City Clerk
1065 Ridgewood Avenue
Holly Hill, FL 32117

Gentlemen:

The undersigned, as Bidder, hereby declares that the only person or persons interested in the Proposal, as principal or principals, is or are named herein and that no other persons than herein mentioned has any interest in the Proposal or the Contract to which the work pertains; that this Proposal is made without connection or arrangement with any other person, company, or parties making a bid or proposal and that the Proposal is in all respects fair and made in good faith without collusion or fraud.

The Bidder further declares that he has examined the site of the work and that from personal knowledge and experience, or that he/she has made sufficient test holes and/or other subsurface investigations to fully satisfy self that such site is a correct and suitable one for this work and he/she assumes full responsibility therefore; that he/she is familiar with all legal requirements (Federal, State and local laws, ordinances, rules and regulations) pertaining to the Work; that he/she has examined the Drawings and Specifications for the work and from his/her own experience or from professional advice that the Drawings and Specifications are sufficient for the work to be done and he/she has examined the other Contract Documents and all addenda relating thereto, and that he/she has satisfied himself/herself fully, relative to all matters and conditions with respect to the work to which this Proposal pertains.

The Bidder proposes and agrees, if this Proposal is accepted, to contract with the City of Holly Hill , (Owner) in the form of contract specified, to furnish all necessary materials, equipment, machinery, tools, apparatus, transportation, and labor and to perform all work necessary to complete the Work specified in the Proposal and other Contract Documents.

The Bidder further proposes and agrees to comply in all respects with the time limits for commencement and completion of the Work as stated in the Contract Form.

Attachment: Danus Proposal (2019-R-38 : Lift Station #13 Rehabilitation)

The Bidder further agrees that the deductions for liquidated damages, as stated in the Contract Form, constitute fixed and agreed liquidated damages to reimburse the Owner for additional costs to the Owner resulting from the Work not being completed within the time limit stated in the Contract Form.

The Bidder further agrees to execute a Contract and furnish satisfactory Performance and Payment Bonds, each in the amount of one-hundred percent of the Contract price, and the required Certificates of Insurance, within ten consecutive calendar days after written notice being given by the Owner of the award of the Contract, and the undersigned agrees that in case of failure on his/her part to execute the said Contract, Performance and Payment Bonds and Insurance Certificates within ten (10) consecutive calendar days after the award of the Contract, the bid guarantee accompanying his/her bid and the money payable thereon shall be paid to the Owner as liquidation of damages sustained by the Owner; otherwise, the bid guarantee shall be returned to the undersigned within fifteen days after the Contract is signed and the Performance and Payment Bonds and Insurance Certificates are filed.

The undersigned agrees to accept as full compensation for completion of the project in full compliance with the Contract Documents, the unit prices for the items named in Section 00 31 00, Schedule of Unit Prices, submitted herein with this Proposal.

The undersigned offers to furnish all materials, equipment and labor for construction of **"LIFT STATION #13 REHABILITATION",** for the City of Holly Hill, Florida, complete in every respect in strict accordance with the drawings, specifications and any future changes therein. The Contractor shall perform these obligations for the prices listed in the "Schedule of Unit Prices: Section 00 31 00" attached and made a part of this Bid. **The bid total is:**

Two Hundred Forty Thousand, Four Hundred Thirty and 00/100 Dollars
(In Words)

Dollars $ 240,430.00 (In Figures)

Bid Alternate 1 is:

Twenty Thousand, Seven Hundred And 00/100 Dollars
(In Words)

Dollars $ 20,700.00 (In Figures)

Attachment: Danus Proposal (2019-R-38 : Lift Station #13 Rehabilitation)

the amount due or payable to the Contractor or his/her Surety, then such excess shall be paid to the Owner by the Contractor or his/her Surety.

SUPPLEMENTAL REQUIREMENTS

The following documents are attached to and made a condition of this bid:

Schedule of Unit Prices: Section 00 31 00
Statement of Bidder's Qualifications: 00 32 00
Listing of Subcontractors: Section 00 33 00
Listing of Previous Experience: Section 00 33 10
Bid Bond: Section 00 41 00
Public Entity Crimes Statement: Section 00 47 00
Anti-Collusion Statement: Section 00 48 00
Drug Free/Tie Preference Statement: Section 00 48 50
Trench Safety Affidavit: Section 00 49 00
Certificate as to Corporate Principal: Section 00 62 00
City of Holly Hill Insurance Requirements: Section 00 80 00A
W9 Request for Taxpayer Identification Number and Certification

REQUIRED DISCLOSURE

At its sole discretion, the City of Holly Hill, Florida may reject any bidder the City finds to lack, or whose present or former executive employees, officers, directors, stockholders, partners or owners are found by the City to lack honesty, integrity, or moral responsibility. The discretion of the City may be exercised based on the City's own investigation, public records, or any other reliable sources of information. By submitting a bid, bidder recognizes and accepts that the City may reject the bid based upon the exercise of its sole discretion and bidder waives any claim it might have for damages or other relief resulting from the rejection of its bid based on these grounds.

SCHEDULE OF MAJOR MANUFACTURERS AND SUPPLIERS

The equipment manufacturers/suppliers on this project shall be as delineated in the following schedule. Bidders should note that the Owner and Engineer have made rigorous investigations of equipment performance and features, and as a result, Bidders are to note that the contract price for this project shall be based on Base Bid equipment. The Base Bid equipment for this project falls under one of two categories. The first category is equipment that the Owner and Engineer have determined will be supplied by a sole source of supply, <u>for which no substitutions or alternates will be entertained or allowed.</u> Bidder is advised that offering of any alternatives to the sole source supplied equipment will be grounds for rejection of his bid as not responsive. The second category of equipment includes those items where the Owner and Engineer deem there to be more than one acceptable supplier of the particular item listed. The equipment which falls under these two categories is a shown on the subsequent pages of this Schedule of Major Manufacturers and Suppliers. Bidder is advised that the award of this Contract will be based solely on the use of Base Bid equipment.

Attachment: Danus Proposal (2019-R-38 : Lift Station #13 Rehabilitation)

The following comments relate only to the second category of equipment, where the Contract Documents are based upon the equipment or products available from the suppliers denoted as A, B, C, etc. below. These equipment manufacturers, along with the sole source suppliers constitute the Base Bid.

Provision is made in the Contract Documents for alternate manufacturers and suppliers whose equipment or product may be deemed equivalent in quality (see General Conditions). However, the Bidder must indicate in his Bid which Base Bid supplier he intends to use for each item of equipment listed by circling one of the listed manufacturers/suppliers. If the Bidder fails to indicate which listed manufacturer/supplier he intends to use if an alternate is rejected, he must use the supplier listed as "A". Also, if the Bidder circles more than one listed supplier, he must use the first supplier circled (unless an alternate is approved).

If the Bidder desires to propose one or more alternate manufacturers/suppliers, he may write in the name of such alternates in the spaces provided on the Alternate Manufactures/Suppliers page following the schedule. He must, nevertheless, also circle one of the listed manufacturers/suppliers because Bidders' Bid price must be based upon this Base Bid list. Wherever an alternate supplier is proposed, the Bidder must insert the amount to be deducted from the Contract Price (either lump sum or unit price) if the alternate supplier is eventually approved. If the proposed alternate supplier is determined "not equivalent" by the Engineer, the Bidder must use the circled supplier.

For any alternate supplier accepted by the Owner, the Contract Price will be reduced by the deductive amount stated in the Bid. However, the Contract Price will not be adjusted for any alternate supplier rejected.

Each proposed alternate will be evaluated in accordance with the General Conditions.

The deductive amount specified for alternate manufacturers/suppliers will not be used in determining the successful Bidder. Alternates will be considered only after award of the contract.

The Contractor shall reimburse the Owner for any costs directly attributable to the change in suppliers, such as additional field trips for the Engineer, additional redesign costs, additional review and inspection costs, etc.

The Owner may request and the Bidder shall supply complete information on proposed alternates prior to the Notice of Award.

Attachment: Danus Proposal (2019-R-38 : Lift Station #13 Rehabilitation)

SCHEDULE OF MAJOR MANUFACTURERS AND SUPPLIERS

Category I - Sole Source Equipment Items:

Item No.	Spec. No.	Equipment/Material	Manufacturer or Supplier
1	333220	Collection System Submersible Pumps	A) ABS

Category II - Major Equipment Items:

NONE

Attachment: Danus Proposal (2019-R-38 : Lift Station #13 Rehabilitation)

ALTERNATE MANUFACTURERS/SUPPLIERS

EQUIPMENT ITEM MATERIAL	SPEC. SECTION	ALTERNATIVE MANUFACTURER / SUPPLIER (LIST ONE ONLY)	DEDUCTIBLE AMOUNT (indicate whether lump sum or unit price) ALTERNATE
1.			
2.			
3.			
4.			
5.			
6.			
7.			
8.			
9.			
10.			

N/A

6-6-2019

Name (signature) Date

Daniel J Pardus

Name (typed and printed)

President

Title

Attachment: Danus Proposal (2019-R-38 : Lift Station #13 Rehabilitation)

ACKNOWLEDGMENT OF ADDENDA

Addenda will be issued via email and it is the Bidder's responsibility to confirm that all addenda have been received prior to submitting a bid for the project. Acknowledgment is hereby made of the following Addenda received since issuance of Drawings and Specifications:

Addendum No. 1 Dated: 5/10/2019 Addendum No. 2 Dated: 5/30/2019
Addendum No. 3 Dated: 5/31/2019 Addendum No. 4 Dated: 6/4/2019
Addendum No. _____ Dated: _____ Addendum No. _____ Dated:

Attached hereto is a cashier's check on the _____ Bank of

_____ or Bid Bond for the sum of

Two Hundred Sixty One Thousand, One Hundred Thirty and 00/100 Dollars (261,130.00),

made payable to City of Holly Hill (Owner).

Danus Utilities, Inc. - Daniel J Pardus
(Name of Bidder) (Affix Seal)

_____
(Signature of Officer)

President
(Title of Officer)

Danus Utilities, Inc.
Name of Bidder

2320 Beardall Ave
Address

Sanford, FL 32771
City/State/Zip

386-804-0068
Telephone

CUC1224744
Contractor's Florida License Number

The full names and residences of persons and firms interested in the foregoing bid, as principals, are as follows:
Daniel J Pardus - 4133 Saddle Club Dr, New Smyrna Beach, FL 32168

END OF SECTION

Attachment: Danus Proposal (2019-R-38 : Lift Station #13 Rehabilitation)

SECTION 00 31 00
SCHEDULE OF UNIT PRICES

CITY OF HOLLY HILL
LIFT STATION #13 REHABILITATION
BID# 19WW05

ITEM NO.	DESCRIPTION	QTY	UNIT	UNIT COST	TOTAL
1	Preconstruction Video	1	LS	$1,150.00	$1,150.00
2	Demolition	1	LS	$12,500.00	$12,500.00
3	Bypass Pumping	1	LS	$7,000.00	$7,000.00
4	Complete Lift Station	1	LS	$145,000.00	$145,000.00
5	Electrical	1	LS	$35,750.00	$35,750.00
6	Tie-Ins				
	a) Tie-In to Existing Force Main	1	LS	$2,500.00	$2,500.00
7	DIP Fittings Add or Delete	1000	LBS	$6.00	$6,000.00
8	Cap and Abandon Existing Old Force Main	1	LS	$2,530.00	$2,530.00
9	Permits and Allowances	1	LS	$10,000.00	$10,000.00
10	As-Built Plans	1	LS	$5,500.00	$5,500.00
11	MOT	1	LS	$2,000.00	$2,000.00
12	Restoration	1	LS	$4,500.00	$4,500.00
13	Rock Rip Rap Bank Protection incl. Bedding Rock & Filter Fabric	36	SY	$6,000.00	$6,000.00
				BASE BID TOTAL	$240,430.00

Bid Alt 1	Relocate and Install Generator	1	LS	$20,700.00	$20,700.00

Submitted by: Daniel J Pardus
Contractor: Danus Utilities, Inc.
Address: 2320 Beardall Ave, Sanford, FL 32771
Telephone: 386-804-0068 Fax: 407-878-1254
State of Florida Certified General Contractor or Underground Contractor (Required Information)
Licensee: Daniel J Pardus License No: CUC1224744

Attachment: Danus Proposal (2019-R-38 : Lift Station #13 Rehabilitation)

SECTION 00 32 00

STATEMENT OF BIDDER'S QUALIFICATIONS

All questions must be answered and the data given must be clear and comprehensive. This statement must be notarized. If necessary, questions may be answered on separate attached sheets. The bidder may submit any additional information he desires.

A. Name of bidder. Danus Utilities, Inc.

B. Permanent main office address. 2320 Beardall Ave, Sanford, FL 32771

C. When organized. June 2009

D. If a corporation, where incorporated. Florida

E. How many years have you been engaged in the contracting business under your present firm or trade name? 10 Years

F. Contracts on hand: (Schedule these, showing amount of each contract and the appropriate anticipated dates of completion.) See Attachment 1 - Open Contracts

G. General character of work performed by your company.
Certified Underground Utilities and Excavation Contractor

H.(1) Have you ever failed to complete any work awarded to you? If so, where and why?
No

H.(2) Provide list of any lawsuits or judgments filed by or against your company in the last three years, indicating the nature and outcome.
N/A

I. Have you ever defaulted on a contract? If so, where and why?
No

J. List the more important projects recently completed by your company, stating the approximate cost for each and the month and year completed.
See Attachment #2

K. List your major equipment See Attachment # 3 - Equipment List.

L. Experience in construction work similar in type to this project.
Seee Attachement # 4 - Job References

M. Background and experience of the principal members of your organization, including the officers. See Attachment #5 Resumes

N. Credit available: $ $200,000.00

O. Give bank reference: Seacoast Bank - Bill Zirkelbach - 386.274.6020

P. Will you, upon request, fill out a detailed financial statement and furnish any other information that may be required by the Owner? Yes....Upon Request

Attachment: Danus Proposal (2019-R-38 : Lift Station #13 Rehabilitation)

Q. The undersigned hereby authorizes and requests any person, firm, or corporation to furnish any information requested by the Owner in verification of the recitals comprising this Statement of Bidder's Qualifications.

Dated at Seminole County this 6 day of June, 2019.

Name of Bidder Daniel J Pardus

By: President
Title

State of Florida

County of Seminole

Daniel J Pardus being duly sworn deposes and says that

he is the President of Danus Utilities, Inc. and that

the answers to the City of Holly Hill foregoing questions
Name of Organization

and all statements therein contained are true and correct.

Subscribed and sworn to before me this 6 day of June, 2019.

Notary Public

Robert H Brown
Notary Public (Print or Type)

ROBERT H. BROWN
MY COMMISSION # GG 146847
EXPIRES: October 23, 2021
Bonded Thru Notary Public Underwriters

My commission expires: October 23, 2021

Attachment: Danus Proposal (2019-R-38 : Lift Station #13 Rehabilitation)

DANUS UTILITIES

Attachment No.: 1

2320 Beardall Ave, Sanford, FL 32771 ◆ P.O. BOX 291671, Port Orange, FL 32129 ◆ (386) 233-5588
State License # CUC 1224744

OPEN CONTRACTS

	EST. COMPLETION	CONTRACT NAME	OWNER INFORMATION	VALUE
	June 2019	LIFT STATION 60 AUTOMATIC TRANSFER SWITCH UPGRADE	New Smyrna Beach, Utilities Commision	$ 672,500.00
	June 2019	LIFT STATIONS 3M, TOMOKA MEADOWS AND ASHFORD LAKES IMPROVEMENTS	Ormond Beach	$ 463,400.00
	July 2019	WWTP #3 South Pond Pump Replacement	Winter Haven	$ 74,220.00
	July 2019	SUNSHINE PARKWAY WWTF HEADWORKS RELINING	Groveland	$ 124,750.00
	August 2019	LIFT STATION N-04 DEMOLITION & GRAVITY LINE INSTALLATION	Brevard County	$ 421,993.00
	August 2019	LIFT STATION S-04 REPLACEMENT	Brevard County	$ 781,135.00
	September 2019	Lift Station 8 & 15 Emergency Pump System	City of Dunedin	$ 476,245.00
	December 2019	CDBG 18 NR Lift Station Rehab & Replacement	City of Macclenny	$ 1,278,515.00

Attachment: Danus Proposal (2019-R-38 : Lift Station #13 Rehabilitation)

DANUS UTILITIES

Attachment No.: 2

2320 Beardall Ave, Sanford, FL 32771 • P.O. BOX 291671, Port Orange, FL 32129 • (386) 233-5588
State License # CUC 1224744

References					
CUSTOMER	REFERENCE NAME	TITLE	ADDRESS	PHONE	Projects
Brevard County	Owen Callard	Construction Manager	2725 Judge Fran Jamieson Way Viera, FL 32940	PH: 321-633-2089 FAX:	Multiple Projects 9 year period
City of Deltona	Jeff Elder	Utilities Superintendant	2345 Providence Blvd. Deltona, FL 3725	PH: 386- 804-8360 FAX:	Multiple Projects 9 year period
City of Port Orange	Graeme Gardener	Assistant Utility Director	500 Oak St, Port Orange, FL 32127	PH: 386 506-5953 FAX:	Multiple Projects 9 year period

Attachment: Danus Proposal (2019-R-38 : Lift Station #13 Rehabilitation)

DANUS UTILITIES

Equipment List

Vehicles	
1	2015 Dodge 5500 Utility Truck w/ Auto Crane and Tools (2)
2	2000 Ford F-350 Utility Truck
3	2015 Ford F-550 Flatbed Truck
4	2017 Ford F-350 Blue Truck
5	2015 Ford F-250 Red Truck
6	2004 Ford F-250 Gray Truck
7	2009 Ford F-150 Red Truck
8	2008 Ford F-150 Red Truck
9	2006 Ford F-150 Silver
Trailers	
1	2018 SureTrac Flat "Blue" Trailer
2	2015 Big Tex Flat "Black" Trailer
3	Big Tex 70PI Dewatering Trailer
4	2017 SureTrac Dump Trailer
5	2013 Big Tex 14LX Dump Trailer
6	2007 Drag Dump Hydraulic Dump
7	Vermeer 750 Gallon Vactor
8	2005 750 Super Vac
By-Pumps	
1	2018 Godwin 8" By-Pass #1
2	Godwin 4" By-Pass
3	Godwin 4" By-Pass
4	DBA 4" Dewatering Pump
Machinary	
1	2013 CAT 304 Mini Excavator
2	2013 CAT 259 Skid Steer W/ Attachments
3	CAT 320E Excavator
Tools	
1	McCroy HDPE Butt Fusion Machine
2	Central Thermoplast HDPE Electro Fusion Machine
3	Generators / Welders
4	Bosch Jack Hammer
5	ISC 695-F4 5HP Concrete Chain Saw
6	Stihl 14" Gas Chop Saws (3)
7	Confined Space Tripods
8	Gas Detectors
9	Hilti Chisel Hammer
10	Compactor / Tamper
11	All Required Piping tools

Attachment: Danus Proposal (2019-R-38 : Lift Station #13 Rehabilitation)

Attachment No.:

DANUS UTILITIES
2320 Beardall Ave, Sanford, FL 32771 • P.O. BOX 291671, Port Orange, FL 32129 • (386) 233-5588
State License # CUC 1224744

Job References

START DATE	COMPLETE DATE	DESCRIPTION	OWNER INFORMATION AND CONTACTS	VALUE
2014	2014	Various Lift Station Rehabilitations - Including: By-pass new pumps, new control panel, pipes, valves and fittings, coatings and precast.	City of Deltona, FL 2345 Providence Blvd Deltona, FL 32725 Scott Ruland 386-804-2372 Engineering: City Engineer	$ 203,023.00
2/10/14	4/11/14	Waste Water Treatment Plan Headworks Rehabilitation - Including: By-pass of 6 MGD, coating of structure.	City of Port Orange, FL 1000 City Center Circle Port Orange FL, 32129 Fred Griffith - 386-506-5753 Engineering: Quentin L Hampton & Associates (386) 761-6810	$ 536,480.00
3/24/14	3/28/14	Install water service and gravity sewer laterals	City of New Smyrna Beach 210 Sams Ave New Smyrna Beach, FL 32168 Randy Walters - 386-424-3026 Engineering - City Engineer	$ 43,250.00
05/2014	05/2014	Lowes Gravity Improvements - Including: install new 8' x 18' deep precast, lift station valve box, electrical, 5000' of 8", 6", and 4" force main, demo old drain field and pumping station.	Lowes Home Centers Howard Bayless 863-680-2293 Engineering: Upham & Associates 386-672-9515	$ 421,000.00
5/9/14	5/16/14	Various Lift Station Repipes - including: By-pass and piping.	City of Ormond Beach, FL 22 South Beach Street Ormond Beach, FL 32174 Thom Masnara 386-295-2067 Engineering - City Engineer	$ 56,750.00
5/29/14	6/24/14	4 Lift Station Rehabilitations - Including: By-pass, new precast , electrical and pipes valves and fittings.	City of Deltona, FL 2345 Providence Blvd Deltona, FL 32725 Scott Ruland 386-804-2372 Engineering - City Engineer	$ 68,400.00
05/2014	05/2014	Lift Stations 2A and 2B Rehabilitation - Including: By-pass new pumps, new control panel, pipes, valves and fittings, coatings and precast.	Town of Longboat Key, FL 501 Bay Isles Road Longboat Key, FL 34228 Brad Walter Phone: 941- 316-1999 Engineering: DMK Engineering 941-412-1293	$ 213,014.00
02/2015	03/2015	Town of Longboat Key Lift Station 8F Rehabilitation - Including: By-pass new pumps, new control panel, pipes, valves and fittings, coatings and precast.	Town of Longboat Key, FL 501 Bay Isles Road Longboat Key, FL 34228 Brad Walter Phone: 941- 316-1999 Engineering: DMK Engineering 941-412-1293	$ 261,393.00
04/2015	06/2015	Volusia County Lift Station Project, Rehabilitation of Lift Stations SE1, SE6 and SE11 - Including: By-pass new pumps, new control panel, pipes, valves and fittings, coatings and precast.	Volusia County, FL 123 W Indiana Ave Delend, FL 32720 Scott Mays 386-943-7027 Engineering: Jones, Edmunds & Associates 800-237-1053	$599,297.00
05/2015	06/2015	Installation of fiberglass liner in existing manhole on Raper Dairy Road for the City of Orlando, FL	Insituform Technologies, Inc. 3016 N Hwy 301 N Tampa, FL 33619 Brandon Gerber 813-627-0007	$85,000.00
06/2015	07/2015	Sagittarius Pump Station Improvements - By-pass new pumps, new control panel, pipes, valves and fittings, coatings and precast.	South Seminole & Orange County Waste Water Transmission Authority 410 Lake Howell Rd, Maitland, FL 32751 Ed Gil DeRubio - 407-628-3419	$193,308.00

Attachment No.: 4

DANUS UTILITIES
2320 Beardall Ave, Sanford, FL 32771 • P.O. BOX 291671, Port Orange, FL 32129 • (386) 233-5588
State License # CUC 1224744

Job References

START DATE	COMPLETE DATE	DESCRIPTION	OWNER INFORMATION AND CONTACTS	VALUE
08/2015	08/2015	Holly Hill Lift Station # 6 Rehabilitation Project - Bid # 14-WW01 Including- By-pass new pumps, new control panel, pipes, valves and fittings, coatings and precast.	City of Holly Hill 1065 Ridgewood Ave Holly Hill, FL 32117 Walt Smyzer 386-248-9463 Engineering: Quentin L Hampton Associates 386-761-6810	$247,761.00
09/2015	10/2015	Holly Hill Lift Station # 17 Rehabilitation Project - Bid # 15 WW02. Including: By-pass new pumps, new control panel, pipes, valves and fittings, coatings and precast.	City of Holly Hill 1065 Ridgewood Ave Holly Hill, FL 32117 Walt Smyzer 386-248-9463 Engineering: Quentin L Hampton Associates 386-761-6810	$208,990.00
10/2015	11/2015	Ormond Beach Saddler's Run Lift Station Rehabilitation Project - Bid # 2015-25: Including - By-pass new pumps, new control panel, pipes, valves and fittings, coatings and precast.	City of Ormond Beach, FL 22 South Beach Street Ormond Beach, FL 32174 Thom Masnara 386-295-2067 Engineering - City Engineer	$179,450.00
11/2015	11/2015	City of Deltona Whitewood and Wellington Rehab Project - ITB # PW 15-10: Including - Removal and replacement of the manhole immediately upstream of lift station #1 and lining of wetwell. Demolition and removal of existing manhole, by-pass pumping, installation of replacement manhole with liner and additional piping required to reestablish the connections and also the lining of existing wetwell.	City of Deltona 2345 Providence Blvd. Deltona, FL 3725 Phyllis Wallace 386-878-8965 Engineering: Quentin L Hampton Associates 386-761-6810	$93,250.00
12/2015	02/2016	Brevard County Lift Station S-07 Replacement - Bid No. B-4-15-90: Including - The modification to existing wet well, removal of pumps, pumps building, control panel, tower, meter and all electrical connections. The work also consists of installing new sanitary wet well, dual submersible pumps, force main, control panel, transfer switch, telemetry tower and all other incidentals necessary to complete the work in accordance with the Contract Documents.	Brevard County, FL 2725 Judge Fran Jamieson Way Viera, Florida 32940 Owen Callard 321-633-2089 Engineering: Quentin L Hampton Associates 386-761-6810	$440,339.00
06/2016	08/2016	SSNOCWTA - Five Points and Consumers Lift Stations Improvements - 2015-16-14: Including - By-pass, Demolition of existing equipment, replacement of risers, replacement of piping valves and fittings, installation of odor control, replace electrical and instrumentation, Installation of new generator ATS and related items.	South Seminole & Orange County Waste Water Transmission Authority 410 Lake Howell Rd, Maitland, FL 32751 Ed Gil DeRubio - 407-628-3419	$ 536,180.00
05/2016	06/2016	Brevard County Lift Station F-10 Electrical Upgrade - B-4-16-17: Including furnishing and installing a Triplex Pump Control Panel, electrical disconnects, battery charging system for the existing emergency generator, complete and integrated grounding system, and making improvements to instruments, controls, alarms, and lighting. This work also involves the re-installation of an Owner-furnished RTU system and includes providing and maintaining a temporary bypass pumping system, performing required demolition of old components, performing all demonstration tests, and furnishing and installing all hardware, fasteners, conduits, wiring, and other incidentals.	Brevard County, FL 2725 Judge Fran Jamieson Way Viera, Florida 32940 Owen Callard: 321-633-2089 Tetra Tech (Engineering): Rasesh Shah 407-480-3926	$ 209,000.00
08/2016	11/2016	Brevard County Lift Stations B-08 and B-11 Replacement - Bid No. B-4-16-13: Including: Demolition, bypass pumping, installation of gravity lines and manhole, installation of wet well, pumps, piping and valves, electrical, control panel, telemetry tower, antenna, and RTU, fence, gate, concrete driveway and ground cover, and restoration.	Brevard County, FL 2725 Judge Fran Jamieson Way Viera, Florida 32940 Owen Callard: 321-633-2089 Engineering: Honeycutt and Associates: Rodney Honeycutt: 321-269-7847	$ 830,950.00

Attachment: Danus Proposal (2019-R-38 : Lift Station #13 Rehabilitation)

Attachment No.: 4

DANUS UTILITIES
2320 Beardall Ave, Sanford, FL 32771 • P.O. BOX 291671, Port Orange, FL 32129 • (386) 233-5588
State License # CUC 1224744

Job References

START DATE	COMPLETE DATE	DESCRIPTION	OWNER INFORMATION AND CONTACTS	VALUE
12/2016	02/2017	City of Holly Hill Lift Station 16 Rehabilitation - BID NO. 16WW01: Including demolition, bypass pumping, supply and installation of PVF, pigging, electrical, directional drill of HDPE force main, tie-in to existing lift station and manhole, air release valve assembly, abandoning of existing force main, MOT and restoration.	City of Holly Hill 1065 Ridgewood Ave Holly Hill, FL 32117 Walt Smyzer 386-248-9463 Engineering: Quentin L Hampton Associates 386-761-6810	$ 236,640.00
12/2016	01/2018	Brevard County Lift Stations S-09 and S-15 Replacement - Bid No. B-4-16-88: Including - The project consists of replacing two (2) existing "dry-well" lift stations with new submersible lift stations (Using Tremmie method), including new valve pads, tie-in to the existing force mains, new power service, new control panel, new telemetry tower (with a 3KVA step down transformer), site grading, chain link fence and gates, new access driveway.	Brevard County, FL 2725 Judge Fran Jamieson Way Viera, Florida 32940 Owen Callard 321-633-2089 Engineering: Honeycutt and Associates: Rodney Honeycutt: 321-269-7847	$ 1,205,242.00
02/2017	05/2017	City of Ormond Beach - Lift Station 8M-1 Improvements - BID NO. 2016-05: Work includes electrical improvements: replacement of the existing valve box; rehabilitation of the existing perimeter knee wall: wet well improvements, including replacement of the existing top slab, lining the existing wet well interior and replacement of the existing riser pipes, guide rails, brackets and pumps. In addition, the work includes removal of an existing camphor tree stump; lining of an existing manhole; replacement of a settled gravity sewer main and surface restoration.	City of Ormond Beach 22 South Beach Street Ormond Beach, FL 32174 Ron Burk: 386-676-3368 Engineering: McKim & Creed, Inc. 139 Executive Circle, Suite 201 Daytona Beach, FL 32114 Scott Spooner: 386-274-2828	$ 216,050.00
01/2017	08/2017	SSNOCWTA - Winter Park Central Lift Stations Improvements - 2015.16-33: Including By-pass, Demolition of existing equipment, replacement of risers, replacement of piping valves and fittings. Concrete/grout repair for base plates and voids. Installation of steel plate for riser pipes, wet well catchment bowl and drop pipe, guide rails, swing gate, crane hoist and runway beam, sluice gate, hatches for effluent vault, wet well and influent control structure, wet well and influent control structure liners. Replace electrical and instrumentation. Canopy structure and restoration.	South Seminole & Orange County Waste Water Transmission Authority 410 Lake Howell Rd, Maitland, FL 32751 Ed Gil DeRubio - 407-628-3419 Engineering: Reiss Engineering Eric Gassen: 407-679-5358	$ 589,093.50
09/2017	01/2018	Brevard County - Lift Station S-17 Replacement - Replace the existing dry well/wet well S-17 Lift Station within the public Right-of-Way for Burns Boulevard. The new lift station will consistof a 10 foot diameter wet well and twin 10 horsepower submersible pumps. A proposed 10 inch force mainwill connect to an existing 10 inch force main located within Burns Boulevard. The existing dry well will becut down below grade and filled with sand. The existing wet well will be converted to a terminal manhole and all other incidentals necessary to complete the work in accordance with the Contract Documents.	Brevard County, FL 2725 Judge Fran Jamieson Way Viera, Florida 32940 Owen Callard: 321-633-2089 Engineering: Honeycutt and Associates: Rodney Honeycutt: 321-269-7847	$ 499,948.00
8/2017	09/2018	Town of Longbaot Key - 7 Lift Station Rehabilitation Project - Including: By-pass pumping. Replacement of pipes, valves and fittings, base plates, guide rails, topslab and hatches and coatings.	Town of Longboat Key 501 Bay Isle Road Longboat Key, FL 34228 Brad Walter - 941-316-1999 Engineering: Town of Longboat Key 321-269-7847	$ 557,969.51

Attachment: Danus Proposal (2019-R-38 : Lift Station #13 Rehabilitation)

Attachment No.: 4

DANUS UTILITIES
2320 Beardall Ave, Sanford, FL 32771 • P.O. BOX 291671, Port Orange, FL 32129 • (386) 233-5588
State License # CUC 1224744

Job References

START DATE	COMPLETE DATE	DESCRIPTION	OWNER INFORMATION AND CONTACTS	VALUE
02/2017	02/2018	Brevard County - Lift Station C-12 Rehabilitation - The project consists of rehabilitation of Lift Station C-12 to include rehabilitation of the existing wet well; removal and disposal / salvaging of existing pumps, valves, fittings and piping from the dry pit; demolition of the top five (5) feet of dry pit and filling it with suitable soil; construction of an above ground valve pad; installation of new pumps, base elbows, discharge piping, valves, and fittings and connection to the existingforce main; installation of a electrical control panel, pedestal box, RTU panel with antenna. The project alsoinvolves site improvements including construction of a fence with gate and an access driveway. By-pass pumping of the wastewater during the rehabilitation of the lift station is included and all other incidentals necessary to complete the work in accordance with the Contract Documents.	Brevard County, FL 2725 Judge Fran Jamieson Way Viera, Florida 32940 Owen Callard: 321-633-2089 Engineering:	$ 234,580.00
01/2018	06/2018	Seminole Tribe of Florida - Hollywood Police Station Rehabilitation - This sewer lift station rehabilitation project generally consists of demolishing the major components of the existing lift station, except forthe wet well, and reconstructing with new components in accordance with STOF Public Works.	Seminole Tribe of Florida 6300 Stirling Road Hollywood, FL 33024 Rudy Garcia - 954-966-6300 Engineering: Jacobs Engineering- Walmer Martinez - 787-901-1627	$ 233,150.00
04/2018	10/2018	Brevard County Lift Station J-02 Replacement - The project consists of the installation of the proposed Lift Station J-02, including but not limited to the demolition of the existing lift station; installation of a new wet well via the tremie method (the tremie method is the only acceptable method), valve vault, pumps, risers, valves, piping, control panel, generator, and associated electrical components, telemetry infrastructure, and the associated instrumentation and controls.	Brevard County, FL 2725 Judge Fran Jamieson Way Viera, Florida 32940 Owen Callard 321-633-2089 Engineering: Honeycutt and Associates: Rodney Honeycutt: 321-269-7847	$ 644,500.00
06/2018	10/2018	Brevard County Lift Station X-15 Rehabilitation - The project consists of relocating three existing blowers from inside a building to outside; construction of a pre-engineered canopy; replacement of existing air piping and valves; temporary blower equipment and piping as necessary to maintain continuous operation of the facility.	Brevard County, FL 2725 Judge Fran Jamieson Way Viera, Florida 32940 Owen Callard 321-633-2089 Engineering: Wade Trim Inc. Rodrigo Cruz 321-728-3389	$ 110,800.00
01/2019	05/2019	City of Cocoa - Lift Station 29 Gravity Main - This project involves the removal, grade correction and replacement of approximately 100 lineal ft of 10" gravity sewer.	City of Cocoa 65 Stone Street Cocoa, FL 32922 Chris Collier 407-616-1921 County Engineering	$ 167,850.00
01/2019	04/2019	The project consists of the rehabilitation of Lift Station T-14 to include rehabilitation of existing wet well; demolition of underground valve box and its replacement with an aboveground valve pad; replacement of the pumps, base elbows, discharge piping, guiderail system, valves / fittings, electrical and RTU panels; and connection to the existing force main. The project also involves bypass pumping during rehabilitation and site restoration such as construction access driveway and replanting of the screening hedge after completion of rehabilitation	Brevard County, FL 2725 Judge Fran Jamieson Way Viera, Florida 32940 Owen Callard 321-633-2089	$ 340,800.00

Attachment: Danus Proposal (2019-R-38 : Lift Station #13 Rehabilitation)

Attachment No. 5

DAN PARDUS
CONSTRUCTION RESUME

1/1993 to 12/1997: Dan Pardus was owner of Multi- Communications and was the foreman and equipment operator supervising crews running conduits on 1-75 installing 20 miles of 4" duct and pull boxes. He also supervised the installation, maintenance, and servicing of all cable systems located in Volusia County, installing coax and fiber cables, jack and boring of roads and driveways, splice taps, setting ground rods, and underground pull boxes. His responsibilities included operating the ditch witch, and plow trencher combo, digging pull boxes in with backhoe, holding pre-construction meetings, reviewing plans, applying for permits, scheduling jobs and material and equipment deliveries, ensuring all work was in compliance with D.O.T and ensuring job site safety and compliance with OSHA regulations.

J & H WATERSTOP, INC. 1/2007 - 1/2009:

Dan Pardus was Project Manager/Superintendent for J & H Waterstop, Inc. supervising lift station rehab jobs for Manatee County, Brevard County, Orange County, The City of Deltona, and the City of Winter Haven. He operated the bobcat and backhoe, supervised dewatering, installations of the piping, valves, fittings, and supervised the force main tie-ins, and supervised subs including electrical, asphalt, and concrete contractors, and supervised crane operators setting structures and performing trench box shoring, and scheduled and performed startup of pumps. His additional duties included preparation of submittals to the engineering firm, holding pre-construction meetings with City Dept. Heads, review of plans, set up by-pass system and maintenance of traffic, ordered and scheduled material and equipment, ensured compliance with &OA' regulations, and was responsible for job site safety and compliance with OSHA regulations. Dan Holds has current DOT Mot Certification and Confined Space Certifications.

DANUS UTILITIES, INC. 2009 - Present

Dan Pardus is the sole owner /operator of Danus Utilities Inc. Dan Pardus purchased the Lift Station Sanitary Sewer division of J & H Waterstop in 2009 and formed Danus Utilities Inc.. Dan holds a current Florida Underground Utility Contractor License. Other Certifications include; Confined Space, 10 hour OSHA, HDPE Butt Fusion Welding, Backflow Repair / Tester and MOT. Danus Utilities currently has 8 full time employees. 3000 sq. ft. shop is located at 3725 Delphini way Sanford Fl. Some equipment owned: 2004 Ford F-350 with utility bed with 3500 lb. Auto crane, (2) fully stocked 2015 Dodge 5500 with Auto Cranes. 2013 Caterpillar Excavator 304 with trailer, 2014 Caterpillar 259 skid steer, 8000 lb. dump trailer, Caterpillar 320 E Excavator,(2) Vermeer Vac-o-Matic 750 Vactor Trailers, HDPE fusion machine, various pipe plugs and chemical grout pump. Danus Utilities Inc. offers complete Rehab services and installation to lift stations, manholes and sanitary sewer force main /gravity sewer connections installation of fiberglass liners in wet wells and manholes. Various coatings to precast surfaces. HDPE electro/butt fusion welding. Chemical pump grouting of precast structures. Vactor services, cleaning and lining of lines Dan's success in all his past business ventures is due to the fact he is a hands on owner that works side by side with all his employees to ensure the finished product is the best it can be.

Attachment: Danus Proposal (2019-R-38 : Lift Station #13 Rehabilitation)

Attachment No. 5

JOEY GUFFENBURG
FOREMAN RESUME

DANUS UTILITIES, INC. 1/2012 - Present

Started with Danus Utilities, Inc. as a foreman supervising all phases of lift station rehabilitations, manhole lining, water and waste water treatment plant repairs/ improvements, excavation of sanitary sewer/water mains. Management of crew and materials. job and consumer safety control. Joey holds current Confined Space, 10 hour OSHA, Excavation and Trench Safety Certifications and a Class A CDL License. He is a competent heavy equipment operator Backhoe/Loader and has operated heavy equipment since the age of 18. Has been a active working participant on-site at over 100 plus lift station Rehabs or new Lift station installations in the Central Florida area.

MWI WELL POINTING 2/2009 - 1/2012

Joey was hired at MWI as project foreman to handle all aspects of well point setup and installation. Managing 3 employees in the install process and to ensure well pointing was pumping to meet the layout requirements. Operating of heavy equipment required to complete the project.

J & H WATERSTOP, INC. 1/2002 - 6/2009

Joey promoted himself thru the years to Foreman with the lift station division handling the following duties. Installing new and rehab lift station pipe, valves and fittings, construction of new lift stations from the precast only stages. He operates an autocrane, bob cat and backhoe. Assisted in lift station bypassing & dewatering setups for rehabs. Installation of Force main tie-ins and all piping associated with tie-ins. Pouring concrete slabs and driveways. Removal and installation of lift station pumps & controls.

Attachment: Danus Proposal (2019-R-38 : Lift Station #13 Rehabilitation)

SECTION 00 33 00
LISTING OF SUBCONTRACTORS

The Bidder proposes that the following subcontractors are qualified to perform the referenced work and have successfully done so on recent projects similar in nature and size. Upon approval of subcontractors listed the successful bidder shall not substitute subcontractors without approval from the Engineer. Bidder shall attach additional sheets as necessary.

SUBCONTRACTOR	COMPANY NAME	REFERENCES
Electrical	Chinchor Electric, Inc. 935 Shadick Dr Orange City, FL 32771 PH-386-774-1020 ECC13004865	1) City of Ormond Beach 2) City of Cocoa 3) St Johns County
Coatings	Plastic Composites, Inc. 1222 Camp Ave Mt Dora, FL 32757 PH-353-383-0194	1) City of Port Orange 2) City of Titusville 3) Town of Longboat Key
		1) 2) 3)
		1) 2) 3)

END OF SECTION

Attachment: Danus Proposal (2019-R-38 : Lift Station #13 Rehabilitation)

SECTION 00 33 10
LISTING OF PREVIOUS EXPERIENCE

The bidder proposes that he/she is qualified to perform the referenced work and has successfully done so on recent projects similar in nature and size. A minimum of three (3) projects must be listed below. The Owner reserves the right to check references and confirm information provided herein.

NO.	PROJECT	OWNER	DESCRIPTION/COST	REFERENCE	DATE WORK STARTED & FINISHED MM/YR TO MM/YR
1	Lift Station T-14 Rehabilitation	Brevard County	Demolition of underground valve box and its replacement with an aboveground valve pad; replacement of the pumps, base elbows, discharge piping, guiderail system, valves / fittings, electrical. $340,800.00	Owen Callard 321-633-2089	1/2019 to 4/2019
2	Lift Station X-15 Rehabilitation	Brevard County	Brevard County Lift Station X-15 Rehabilitation - The project consists of relocating three existing blowers from inside a building to outside; construction of a pre-engineered canopy; replacement of existing air piping and valves; temporary blower equipment and p iping as necessary to maintain continuous operation of the facility. $110,800.00	Owen Callard 321-633-2089	6/2018 to 10/2018
3	Hollywood Police Station Lift Station Rehabilitation	Seminole Tribe of Florida	This sewer lift station rehabilitation project generally consists of demolishing the major components of the existing lift station, except fort he wet well, and reconstructing with new components in accordance with STOF Public Works. $233,150.00	Rudy Garcia 954-966-6300	1/2018 to 6/2018

END OF SECTION

Attachment: Danus Proposal (2019-R-38 : Lift Station #13 Rehabilitation)

SECTION 00 41 00
BID BOND

Executed in 3 Counterparts
Bid# 19WW05

KNOW ALL MEN BY THESE PRESENTS, that we, Danus Utilities, Inc. as Principal and North American Specialty* of the City of Kansas City State of MO, a corporation existing under the laws of the State of Florida, as Surety, are held and firmly bound unto the City of Holly Hill, Florida hereinafter called the Owner, in the sum of Five Percent of Amount Bid ---------- Dollars ($----- (5%) -------) lawful money of the United States of America, for the payment of which sum well and truly to be made, we bind ourselves our heirs, executors, administrators and successors, jointly and severally, firmly by these presents.

* Insurance Company

The condition of this obligation is such that whereas the Principal has submitted the accompanying Proposal or Bid, for the construction of:

LIFT STATION #13 REHABILITATION

NOW, THEREFORE, if the Principal shall not withdraw said Bid within ninety (90) days after the opening of the same and in the event of the acceptance of his proposal by the Owner, shall, within the period specified therefore, enter into a written contract with the Owner in accordance with the Bid as accepted, and give bond with good and sufficient surety or sureties, as may be required, for the faithful performance and proper fulfillment of such contract, or in the event of the withdrawal of said Bid within the period specified, of the failure to enter into such contract and give bonds within the time specified, if the Principal shall pay the Owner the difference between the amount specified in said Bid and the amount for which the Owner may procure the required work, if the latter amount be in excess of the former, then the above obligation shall be void and of no effect, otherwise to remain in full force and virtue.

Attachment: Danus Proposal (2019-R-38 : Lift Station #13 Rehabilitation)

IN WITNESS WHEREOF, the above bounden parties have executed this instrument under their several seals this 6th day of June, 2019, the name and corporate seal of each corporate body being hereto affixed and these presents duly signed by its undersigned representative, pursuant to authority of its governing body.

IN PRESENCE OF:

N/A

N/A

Witness

N/A (Seal)

N/A (Seal)

N/A (Seal)

Individual or Partner

2320 Beardall Avenue

Sanford, FL 32771

Address

Danus Utilities, Inc.

Corporate Principal

ATTEST:

Robert H Brown

President AFFIX CORPORATE SEAL

North American Specialty Insurance Company

1200 Main Street, Suite 800, Kansas City, MO 64105

Address

By Jeffrey W. Reich

AFFIX CORPORATE SEAL Jeffrey W. Reich

North American Specialty Insurance Company

Corporate Surety

ATTEST:

Jenna Pagan

Jeffrey W. Reich, Attorney-In-Fact & FL Lic. Res. Agent

Title

END OF SECTION

Attachment: Danus Proposal (2019-R-38 : Lift Station #13 Rehabilitation)

SWISS RE CORPORATE SOLUTIONS

NORTH AMERICAN SPECIALTY INSURANCE COMPANY
WASHINGTON INTERNATIONAL INSURANCE COMPANY
WESTPORT INSURANCE CORPORATION

GENERAL POWER OF ATTORNEY

KNOW ALL MEN BY THESE PRESENTS, THAT North American Specialty Insurance Company, a corporation duly organized and existing under laws of the State of New Hampshire, and having its principal office in the City of Overland Park, Kansas and Washington International Insurance Company a corporation organized and existing under the laws of the State of New Hampshire and having its principal office in the City of Overland Park, Kansas, and Westport Insurance Corporation, organized under the laws of the State of Missouri, and having its principal office in the City of Overland Park, Kansas each does hereby make, constitute and appoint:

JEFFREY W. REICH, SUSAN L. REICH, KIM E. NIV, TERESA L. DURHAM, GLORIA A. RICHARDS, CHERYL FOLEY, LISA ROSELAND, SONJA AMANDA FLOREE HARRIS, ROBERT P. O'LINN and SARAH K. O'LINN JOINTLY OR SEVERALLY

Its true and lawful Attorney(s)-in-Fact, to make, execute, seal and deliver, for and on its behalf and as its act and deed, bonds or other writings obligatory in the nature of a bond on behalf of each of said Companies, as surety, on contracts of suretyship as are or may be required or permitted by law, regulation, contract or otherwise, provided that no bond or undertaking or contract or suretyship executed under this authority shall exceed the amount of:

ONE HUNDRED TWENTY FIVE MILLION ($125,000,000.00) DOLLARS

This Power of Attorney is granted and is signed by facsimile under and by the authority of the following Resolutions adopted by the Boards of Directors of North American Specialty Insurance Company and Washington International Insurance Company at meetings duly called and held on March 24, 2000 and Westport Insurance Corporation by written consent of its Executive Committee dated July 18, 2011.

"RESOLVED, that any two of the President, any Senior Vice President, any Vice President, any Assistant Vice President, the Secretary or any Assistant Secretary be, and each or any of them hereby is authorized to execute a Power of Attorney qualifying the attorney named in the given Power of Attorney to execute on behalf of the Company bonds, undertakings and all contracts of surety, and that each or any of them hereby is authorized to attest to the execution of any such Power of Attorney and to attach therein the seal of the Company; and it is

FURTHER RESOLVED, that the signature of such officers and the seal of the Company may be affixed to any such Power of Attorney or to any certificate relating thereto by facsimile, and any such Power of Attorney or certificate bearing such facsimile signatures or facsimile seal shall be binding upon the Company when so affixed and in the future with regard to any bond, undertaking or contract of surety to which it is attached."

NORTH AMERICAN SPECIALTY INSURANCE COMPANY CORPORATE SEAL 1973 NEW HAMPSHIRE

WASHINGTON INTERNATIONAL INSURANCE COMPANY CORPORATE SEAL NEW HAMPSHIRE

By _____
Steven P. Anderson, Senior Vice President of Washington International Insurance Company
& Senior Vice President of North American Specialty Insurance Company
& Senior Vice President of Westport Insurance Corporation

By _____
Michael A. Ito, Senior Vice President of Washington International Insurance Company
& Senior Vice President of North American Specialty Insurance Company
& Senior Vice President of Westport Insurance Corporation

WESTPORT INSURANCE CORPORATION CORPORATE SEAL MISSOURI

IN WITNESS WHEREOF, North American Specialty Insurance Company, Washington International Insurance Company and Westport Insurance Corporation have caused their official seals to be hereunto affixed, and these presents to be signed by their authorized officers this this 22nd day of February, 20 18.

North American Specialty Insurance Company
Washington International Insurance Company
Westport Insurance Corporation

State of Illinois
County of Cook ss:

On this 22nd day of February, 20 18, before me, a Notary Public personally appeared Steven P. Anderson, Senior Vice President of Washington International Insurance Company and Senior Vice President of North American Specialty Insurance Company and Senior Vice President of Westport Insurance Corporation and Michael A. Ito Senior Vice President of Washington International Insurance Company and Senior Vice President of North American Specialty Insurance Company and Senior Vice President of Westport Insurance Corporation, personally known to me, who being by me duly sworn, acknowledged that they signed the above Power of Attorney as officers of and acknowledged said instrument to be the voluntary act and deed of their respective companies.

OFFICIAL SEAL
M. KENNY
Notary Public - State of Illinois
My Commission Expires
12/04/2021

M. Kenny, Notary Public

I, Jeffrey Goldberg, the duly elected Vice President and Assistant Secretary of North American Specialty Insurance Company, Washington International Insurance Company and Westport Insurance Corporation do hereby certify that the above and foregoing is a true and correct copy of a Power of Attorney given by said North American Specialty Insurance Company, Washington International Insurance Company and Westport Insurance Corporation which is still in full force and effect.

IN WITNESS WHEREOF, I have set my hand and affixed the seals of the Companies this 6th day of June, 20 19.

Jeffrey Goldberg, Vice President & Assistant Secretary of Washington International Insurance Company &
North American Specialty Insurance Company & Vice President & Assistant Secretary of Westport Insurance Corporation

Attachment: Danus Proposal (2019-R-38 : Lift Station #13 Rehabilitation)

FLORIDA SURETY BONDS, INC. Phone 407-786-7770 Maitlan FL

Attachment: Danus Proposal (2019-R-38 : Lift Station #13 Rehabilitation)

SECTION 00 47 00

SWORN STATEMENT UNDER SECTION 287.133(3)(a), FLORIDA STATUTES, ON PUBLIC ENTITY CRIMES:

This sworn statement is submitted with Bid, Proposal **or** Contract No. 19WW05 for City of Holly Hill.

This sworn statement is submitted by Danus Utilities, Inc. whose business address is 2320 Beardall Ave, Sanford, FL 32771 and (if applicable) its Federal Employer Identification Number (FEIN) is 27-0404772. (If the entity has no FEIN, include the Social Security Number of the individual signing this sworn statement: ----------.)

My name is Daniel J Pardus any my relationship to the entity named above is President.

I understand that a "public entity crime" as defined in Paragraph 287.133(g), Florida Statutes, means a violation of any state or federal law by a person with respect to and directly related to the transaction of business with any public entity or with an agency or political subdivision of any other state or with the United States, including, but not limited to, any bid or contract for goods or services to be provided to any public entity or an agency or political subdivision of any other state or of the United States and involving antitrust, fraud, theft, bribery, collusion, racketeering, conspiracy, or material misrepresentation.

I understand that "convicted" or "conviction" as defined in Paragraph 287.133(i)(b), Florida Statutes, means a finding of guilt or a conviction of a public entity crime, with or without an adjudication of guilt, in any federal or state trial court of record relating to charges brought by indictment or information after July 1, 1989, as a result of a jury verdict, nonjury trial, or entry of a plea of guilty or nolo contenders.

I understand that an "affiliate" as defined in Paragraph **287.133(l)(a),** Florida Statutes, means:

1. A predecessor or successor of a person convicted of a public entity crime: or

2. An entity under the control of any natural person who is active in the management of the entity and who has been convicted of a public entity crime. The term "affiliate" includes those officers, directors, executives, partners, shareholders, employees, members, and agents who are active in the management of an affiliate. The ownership by one person of shares constituting a controlling interest in another person, or a pooling of equipment or income among persons when not for fair market value under an arm's length agreement, shall be a prima facie that one person controls another person. A person who knowingly enters into a joint venture with a

Attachment: Danus Proposal (2019-R-38 : Lift Station #13 Rehabilitation)

person who has been convicted of a public entity crime in Florida during the preceding 36 months shall be considered an affiliate.

I understand that a "person" as defined in Paragraph 287.133(i)(e), Florida Statutes, means any natural person or entity organized under the laws of any state or of the United States with the legal power to enter into a binding contract and which bids or applies to bid on contracts for the provision of goods or services let by a public entity, or which otherwise transacts or applies to transact business with a public entity. The term "person" includes those officers, directors, executives, partners, shareholders, employees, members, and agents who are active in management of an entity.

Based on information and belief, the statement which I have marked below is true in relation to the entity submitting this sworn statement. (Please indicate which statement applies).

_X_ Neither the entity submitting this sworn statement, nor any officers, directors, executives, partners, shareholders, employees, members or agents who are active in management of the entity, nor any affiliate of the entity have been charged with and convicted of a public entity crime subsequent to July 1, 1989.

_____ The entity submitting this sworn statement, or one or more of the officers, directors, executives, partners, shareholders, employees, members, or agents who are active in management of the entity, or an affiliate of the entity has been charged with and convicted of a public entity crime subsequent to July 1, 1989, AND (Please indicate which additional statement applies.)

_____ There has been a proceeding concerning the conviction before a hearing officer of the State of Florida, Division of Administrative Hearings. The final order entered by the hearing officer did not place the person or affiliate on the convicted vendor list. (Please attach a copy of the final order.)

_____ The person or affiliate was placed on the convicted vendor list. There has been a subsequent proceeding before a hearing officer of the State of Florida, Division of Administrative Hearings. The final order entered by the hearing officer determined that it was in the public interest to remove the person or affiliate from the convicted vendor list. (Please attach a copy of the final order).

Attachment: Danus Proposal (2019-R-38 : Lift Station #13 Rehabilitation)

(Signature) _____ Date: June 6, 2019

State of Florida County of Volusia

PERSONALLY APPEARED BEFORE ME, the undersigned authority, Daniel J Pardus who, after first being sworn by me, affixed his/her signature in the space provided above on this 6 day of June, 2019

ROBERT H. BROWN
MY COMMISSION # GG 146847
EXPIRES: October 23, 2021
Bonded Thru Notary Public Underwriters

Notary Public

My Commission Expires: October 23, 2021

Attachment: Danus Proposal (2019-R-38 : Lift Station #13 Rehabilitation)

SECTION 00 48 00
ANTI-COLLUSION STATEMENT

By signing this form, the bidder agrees that this is made without any other understanding, agreement, or connection with any person, corporation, or firm submitting a proposal for the same purpose and that the proposal is in all respects fair and without collusion or fraud.

SIGN in ink in the space provided below. Unsigned bids will be considered incomplete, and will be disqualified, and rejected.

IT IS AGREED BY THE UNDERSIGNED BIDDER THAT THE SIGNING AND DELIVERY OF THE BID REPRESENTS THE BIDDER'S ACCEPTANCE OF THE TERMS AND CONDITIONS OF THE FORGOING SPECIFICATIONS, CONTRACT AND PROVISIONS, AND IF AWARDED, THIS CONTRACT WILL REPRESENT THE AGREEMENT BETWEEN EACH OF THE GOVERNMENTAL PARTIES.

NAME OF FIRM: Danus Utilities, Inc.

SIGNED BY: _____
(MUST BE SIGNED BY A COMPANY OFFICER OR AUTHORIZED AGENT)

TITLE: President

ADDRESS: 2320 Beardall Ave

CITY AND STATE: Sanford, FL 32771

TELEPHONE: 386-804-0068

COMPLETION TIME: 150/180 Days

NO proposals will be withdrawn for a period of ninety (90) days subsequent to the opening of the proposals, without the consent of the City of Holly Hill.

NO BID (REASON) N/A

END OF SECTION

Attachment: Danus Proposal (2019-R-38 : Lift Station #13 Rehabilitation)

SECTION 00 48 50
DRUG FREE/TIE PREFERENCE STATEMENT

In the event of a tie bid a preference is given to vendors submitting a certification with their bid/proposal certifying they have a drug-free workplace in accordance with Section 287.087, Florida Statutes. This requirement affects all public entities of the State and becomes effective January 1, 1991. The special conditions are as follow:

IDENTICAL TIE BIDS - Preference shall be given to businesses with drug-free workplace programs. Whenever two or more bids which are equal with respect to price, quality, and service are received by the State or by any political subdivision for the procurement of commodities or contractual services, a bid received from a business that certifies that it has implemented a drug-free workplace program shall be given preference in the award process. Established procedures for processing tie bids will be followed if none of the tied vendors have a drug-free workplace program. In order to have a drug-free workplace program, a business shall:

1. Publish a statement notifying employees that the unlawful manufacture, distribution, dispensing, possession, or use of a controlled substance is prohibited in the workplace and specifying the actions that will be taken against employees for violations of such prohibition.

2. Inform employees about the dangers of drug abuse in the workplace, the business's policy of maintaining a drug-free workplace, any available drug counseling, rehabilitation and employee assistance programs, and the penalties that may be imposed upon employees for drug abuse violations.

3. Give each employee engaged in providing the commodities or contractual services that are under bid a copy of the statement specified in subsection (1).

4. In the statement specified in subsection (1), notify the employees that, as a condition of working on the commodities or contractual services that are under bid, the employee will abide by the terms of the statement and will notify the employer of any conviction or, or plea of guilty or nolo contendere to, any violation of chapter 893 or of any controlled substance law of the United States or any state, for a violation occurring in the workplace no later than five (5) days after such conviction.

5. Impose a sanction on, or require the satisfaction participation in a drug abuse assistance or rehabilitation program if such is available in the employee's community, by any employee who is so convicted.

6. Make a good faith effort to continue to maintain a drug-free workplace through implementation of this section.

As the person authorized to sign the statement, I certify that this firm complies fully with the above requirements.

VENDOR'S SIGNATURE

END OF SECTION

Attachment: Danus Proposal (2019-R-38 : Lift Station #13 Rehabilitation)

SECTION 00 49 00
TRENCH SAFETY AFFIDAVIT

Trench excavations on this Project are expected to be in excess of 5 feet deep. The Occupational Safety and Health Administration excavation safety standards, 29 CFR 1926.650 Subpart P trench safety standards will be in effect during the period of construction of the Project.

Bidder acknowledges that included in the Bid Price are costs for complying with the Florida Trench Safety Act (90-096, Laws of FL) effective October 1, 1990, and hereby gives assurance that, if awarded the Contract, the Contractor or Subcontractor performing trench excavation work on the Project will comply with the applicable trench safety standards. The Bidder further identifies the costs as follows:

Trench Safety Item (Description)	Cost
Trench Box	$1,000.00

One Thousand and 00/100 Dollars
(Cost in Words)

TOTAL $ 1,000.00

FAILURE TO COMPLETE THE ABOVE SHALL RESULT IN THE BID BEING DECLARED NON-RESPONSIVE

COMPANY NAME: Danus Utilities, Inc.

DATE: 6/6/2019 BY: _____
Daniel J Pardus - President

(Additional sheets shall be attached, as needed and, items shall be organized to correspond with the bid format)

Attachment: Danus Proposal (2019-R-38 : Lift Station #13 Rehabilitation)

SECTION 00 62 00
CERTIFICATE AS TO CORPORATE PRINCIPAL

I, Alice M Pardus, certify that I am the Secretary of the corporation named as Principal in the within Bid Bond; that Daniel J Pardus who signed the said Bid Bond on behalf of the Principal was then President of said corporation; that I know his signature, and his signature thereto is genuine; and that said Bid Bond was duly signed, sealed and attested for in behalf of said corporation by authority of its governing body.

Alice M Pardus

AFFIX CORPORATE SEAL

END OF SECTION

Attachment: Danus Proposal (2019-R-38 : Lift Station #13 Rehabilitation)

Form **W-9**
(Rev. October 2018)
Department of the Treasury
Internal Revenue Service

Request for Taxpayer Identification Number and Certification

▶ Go to *www.irs.gov/FormW9* for instructions and the latest information.

Give Form to the requester. Do not send to the IRS.

Print or type. See Specific Instructions on page 3.

1 Name (as shown on your income tax return). Name is required on this line; do not leave this line blank.
Danus Utilities, Inc.

2 Business name/disregarded entity name, if different from above

3 Check appropriate box for federal tax classification of the person whose name is entered on line 1. Check only **one** of the following seven boxes.

☐ Individual/sole proprietor or single-member LLC ☐ C Corporation ☑ S Corporation ☐ Partnership ☐ Trust/estate

☐ Limited liability company. Enter the tax classification (C=C corporation, S=S corporation, P=Partnership) ▶ _____

Note: Check the appropriate box in the line above for the tax classification of the single-member owner. Do not check LLC if the LLC is classified as a single-member LLC that is disregarded from the owner unless the owner of the LLC is another LLC that is **not** disregarded from the owner for U.S. federal tax purposes. Otherwise, a single-member LLC that is disregarded from the owner should check the appropriate box for the tax classification of its owner.

☐ Other (see instructions) ▶

4 Exemptions (codes apply only to certain entities, not individuals; see instructions on page 3):

Exempt payee code (if any) _____

Exemption from FATCA reporting code (if any) _____

(Applies to accounts maintained outside the U.S.)

5 Address (number, street, and apt. or suite no.) See instructions.
2320 Beardall Ave

6 City, state, and ZIP code
Sanford, FL 32771

Requester's name and address (optional)
City of Holly Hill
1065 Ridgewood Avenue
Holly Hill, FL 32117

7 List account number(s) here (optional)

Part I Taxpayer Identification Number (TIN)

Enter your TIN in the appropriate box. The TIN provided must match the name given on line 1 to avoid backup withholding. For individuals, this is generally your social security number (SSN). However, for a resident alien, sole proprietor, or disregarded entity, see the instructions for Part I, later. For other entities, it is your employer identification number (EIN). If you do not have a number, see *How to get a TIN,* later.

Note: If the account is in more than one name, see the instructions for line 1. Also see *What Name and Number To Give the Requester* for guidelines on whose number to enter.

Social security number
☐☐☐ - ☐☐ - ☐☐☐☐

or

Employer identification number
2 7 - 0 4 0 4 7 7 2

Part II Certification

Under penalties of perjury, I certify that:

1. The number shown on this form is my correct taxpayer identification number (or I am waiting for a number to be issued to me); and
2. I am not subject to backup withholding because: (a) I am exempt from backup withholding, or (b) I have not been notified by the Internal Revenue Service (IRS) that I am subject to backup withholding as a result of a failure to report all interest or dividends, or (c) the IRS has notified me that I am no longer subject to backup withholding; and
3. I am a U.S. citizen or other U.S. person (defined below); and
4. The FATCA code(s) entered on this form (if any) indicating that I am exempt from FATCA reporting is correct.

Certification instructions. You must cross out item 2 above if you have been notified by the IRS that you are currently subject to backup withholding because you have failed to report all interest and dividends on your tax return. For real estate transactions, item 2 does not apply. For mortgage interest paid, acquisition or abandonment of secured property, cancellation of debt, contributions to an individual retirement arrangement (IRA), and generally, payments other than interest and dividends, you are not required to sign the certification, but you must provide your correct TIN. See the instructions for Part II, later.

Sign Here Signature of U.S. person ▶ [signature] Date ▶ 6-6-2019

General Instructions

Section references are to the Internal Revenue Code unless otherwise noted.

Future developments. For the latest information about developments related to Form W-9 and its instructions, such as legislation enacted after they were published, go to *www.irs.gov/FormW9.*

Purpose of Form

An individual or entity (Form W-9 requester) who is required to file an information return with the IRS must obtain your correct taxpayer identification number (TIN) which may be your social security number (SSN), individual taxpayer identification number (ITIN), adoption taxpayer identification number (ATIN), or employer identification number (EIN), to report on an information return the amount paid to you, or other amount reportable on an information return. Examples of information returns include, but are not limited to, the following.

- Form 1099-INT (interest earned or paid)
- Form 1099-DIV (dividends, including those from stocks or mutual funds)
- Form 1099-MISC (various types of income, prizes, awards, or gross proceeds)
- Form 1099-B (stock or mutual fund sales and certain other transactions by brokers)
- Form 1099-S (proceeds from real estate transactions)
- Form 1099-K (merchant card and third party network transactions)
- Form 1098 (home mortgage interest), 1098-E (student loan interest), 1098-T (tuition)
- Form 1099-C (canceled debt)
- Form 1099-A (acquisition or abandonment of secured property)

Use Form W-9 only if you are a U.S. person (including a resident alien), to provide your correct TIN.

If you do not return Form W-9 to the requester with a TIN, you might be subject to backup withholding. See What is backup withholding, *later.*

Attachment: Danus Proposal (2019-R-38 : Lift Station #13 Rehabilitation)

ACORD®

CERTIFICATE OF LIABILITY INSURANCE

DATE (MM/DD/YYYY): 06/27/2018

THIS CERTIFICATE IS ISSUED AS A MATTER OF INFORMATION ONLY AND CONFERS NO RIGHTS UPON THE CERTIFICATE HOLDER. THIS CERTIFICATE DOES NOT AFFIRMATIVELY OR NEGATIVELY AMEND, EXTEND OR ALTER THE COVERAGE AFFORDED BY THE POLICIES BELOW. THIS CERTIFICATE OF INSURANCE DOES NOT CONSTITUTE A CONTRACT BETWEEN THE ISSUING INSURER(S), AUTHORIZED REPRESENTATIVE OR PRODUCER, AND THE CERTIFICATE HOLDER.

IMPORTANT: If the certificate holder is an ADDITIONAL INSURED, the policy(ies) must have ADDITIONAL INSURED provisions or be endorsed. If SUBROGATION IS WAIVED, subject to the terms and conditions of the policy, certain policies may require an endorsement. A statement on this certificate does not confer rights to the certificate holder in lieu of such endorsement(s).

PRODUCER
Caton-Hosey Insurance
3731 Nova Rd.
Port Orange FL 32129

CONTACT NAME: Melissa Adrian, CPSR
PHONE (A/C, No, Ext): (386) 767-3161 FAX (A/C, No): (386) 760-1770
E-MAIL ADDRESS: melissa@catonhosey.com

INSURER(S) AFFORDING COVERAGE	NAIC #
INSURER A: National Builders (Vinings)	16632
INSURER B: Owners Insurance Company	32700
INSURER C: Starstone Insurance	88986
INSURER D:	
INSURER E:	
INSURER F:	

INSURED
Danus Utilities, Inc
4133 Saddle Club Dr
New Smyrna Beach FL 32168

COVERAGES CERTIFICATE NUMBER: CL1862719812 REVISION NUMBER:

THIS IS TO CERTIFY THAT THE POLICIES OF INSURANCE LISTED BELOW HAVE BEEN ISSUED TO THE INSURED NAMED ABOVE FOR THE POLICY PERIOD INDICATED. NOTWITHSTANDING ANY REQUIREMENT, TERM OR CONDITION OF ANY CONTRACT OR OTHER DOCUMENT WITH RESPECT TO WHICH THIS CERTIFICATE MAY BE ISSUED OR MAY PERTAIN, THE INSURANCE AFFORDED BY THE POLICIES DESCRIBED HEREIN IS SUBJECT TO ALL THE TERMS, EXCLUSIONS AND CONDITIONS OF SUCH POLICIES. LIMITS SHOWN MAY HAVE BEEN REDUCED BY PAID CLAIMS.

INSR LTR	TYPE OF INSURANCE	ADDL INSD	SUBR WVD	POLICY NUMBER	POLICY EFF (MM/DD/YYYY)	POLICY EXP (MM/DD/YYYY)	LIMITS	
A	[X] COMMERCIAL GENERAL LIABILITY [ ] CLAIMS-MADE [X] OCCUR [X] Contractual Liability [X] XCU Included GEN'L AGGREGATE LIMIT APPLIES PER: [ ] POLICY [X] PRO-JECT [X] LOC [ ] OTHER:	Y		PKG-0197186-00	07/02/2018	07/02/2019	EACH OCCURRENCE DAMAGE TO RENTED PREMISES (Ea occurrence) MED EXP (Any one person) PERSONAL & ADV INJURY GENERAL AGGREGATE PRODUCTS - COMP/OP AGG	$ 1,000,000 $ 300,000 $ 10,000 $ 1,000,000 $ 2,000,000 $ 2,000,000 $
B	AUTOMOBILE LIABILITY [X] ANY AUTO [ ] OWNED AUTOS ONLY [ ] SCHEDULED AUTOS [X] HIRED AUTOS ONLY [X] NON-OWNED AUTOS ONLY			4806741403	07/02/2018	07/02/2019	COMBINED SINGLE LIMIT (Ea accident) BODILY INJURY (Per person) BODILY INJURY (Per accident) PROPERTY DAMAGE (Per accident)	$ 1,000,000 $ $ $ $
C	[X] UMBRELLA LIAB [X] OCCUR [ ] EXCESS LIAB [ ] CLAIMS-MADE [ ] DED [ ] RETENTION $			G82835180ALI	07/02/2018	07/02/2019	EACH OCCURRENCE AGGREGATE	$ 4,000,000 $ 4,000,000 $
A	WORKERS COMPENSATION AND EMPLOYERS' LIABILITY ANY PROPRIETOR/PARTNER/EXECUTIVE OFFICER/MEMBER EXCLUDED? (Mandatory in NH) Y/N [N] If yes, describe under DESCRIPTION OF OPERATIONS below	N/A		WCV-0264441-00	07/02/2018	07/02/2019	[X] PER STATUTE [ ] OTH-ER E.L. EACH ACCIDENT E.L. DISEASE - EA EMPLOYEE E.L. DISEASE - POLICY LIMIT	 $ 1,000,000 $ 1,000,000 $ 1,000,000

DESCRIPTION OF OPERATIONS / LOCATIONS / VEHICLES (ACORD 101, Additional Remarks Schedule, may be attached if more space is required)

Certificate Holder is included as an Additional Insured for General Liability Only with respects to operations of the Named Insured and as required by written contract.

CERTIFICATE HOLDER

City of Holly Hill
1065 Ridgewood Avenue
Holly Hill FL 32117

CANCELLATION

SHOULD ANY OF THE ABOVE DESCRIBED POLICIES BE CANCELLED BEFORE THE EXPIRATION DATE THEREOF, NOTICE WILL BE DELIVERED IN ACCORDANCE WITH THE POLICY PROVISIONS.

AUTHORIZED REPRESENTATIVE

© 1988-2015 ACORD CORPORATION. All rights reserved

The ACORD name and logo are registered marks of ACORD

RICK SCOTT, GOVERNOR

JONATHAN ZACHEM, SECRETARY

dbpr

STATE OF FLORIDA
DEPARTMENT OF BUSINESS AND PROFESSIONAL REGULATION

CONSTRUCTION INDUSTRY LICENSING BOARD

THE UNDERGROUND UTILITY & EXCAVATION CO HEREIN IS CERTIFIED UNDER THE PROVISIONS OF CHAPTER 489, FLORIDA STATUTES

PARDUS, DANIEL J

DANUS UTILITIES INC
2320 BEARDALL AVE
SANFORD FL 32771

LICENSE NUMBER: CUC1224744

EXPIRATION DATE: AUGUST 31, 2020

Always verify licenses online at MyFloridaLicense.com

Do not alter this document in any form.

This is your license. It is unlawful for anyone other than the licensee to use this document.

SEMINOLE COUNTY BUSINESS TAX RECEIPT

VALID THROUGH 09/30/19

DANUS UTILITIES INC
2320 BEARDALL AVE
SANFORD, FL 32771

DAN J PARDUS (OFFICER)

Account #: 197339

REGULATED
License # - CUC1224744
Qualifier- PARDUS DANIEL J
**SANFORD CITY LICENSE REQUIRED **

Receipt #: 10292018082903734 Amount Paid: $ 45.00 Date Paid: 08/29/2018

BUSINESS OWNER, PLEASE NOTE THE FOLLOWING!

* DISPLAY THE ABOVE RECEIPT PROMINENTLY

* RECEIVE THIS TAX BEFORE THE FEE

* REPORT ALL CHANGES

DANUS UTILITIES INC
PO BOX 291671
PORT ORANGE, FL 32129

Attachment: Danus Proposal (2019-R-38 : Lift Station #13 Rehabilitation)

CITY OF SANFORD
FLORIDA

CITY OF SANFORD
Building Division
PO Box 1788, Sanford, FL 32772-1788

2018

LOCAL BUSINESS TAX RECEIPT

VALID THROUGH SEPTEMBER 30, 2019

DANUS UTILITIES INC
2320 BEARDALL AVE
SANFORD FL 32771

This receipt is a local business tax only. It does not permit the local business taxpayer to violate any existing zoning or regulatory laws of the state or county, nor does it exempt the business taxpayer from any other license or permits required by law.

Issue Date: August 14, 2018 **Control Number:** 0031005
Business Location: 2320 BEARDALL AVE

Receipt Number	Classification	Receipt Amount	Penalty Amount	Total
00044925	FIREINS FIRE INSPECTIONS	50.00	.00	50.00
00044926	5030B CONTRACTOR 5-9 EMPLOYEES	150.00	.00	150.00
RESTRICTION COMMENT	UNDERGROUND UTILITY LOCATOR/CONTRACTOR SUBJECT TO MEETING P & Z CONDITIONS			

SEMINOLE COUNTY TAX RECEIPT REQUIRED
ORIGINAL TAX RECEIPT MUST BE DISPLAYED ON PREMISES

2018 FLORIDA PROFIT CORPORATION ANNUAL REPORT

DOCUMENT# P09000053628

Entity Name: DANUS UTILITIES INC

Current Principal Place of Business:

2320 BEARDALL AVE
SANFORD FL 32771

Current Mailing Address:

P.O. BOX 291671
PORT ORANGE, FL 32129 US

FEI Number: 27-0404772

Certificate of Status Desired: No

Name and Address of Current Registered Agent:

PARDUS DAN J
4133 SADDLE CLUB DR
NEW SMYRNA BEACH FL 32168 US

FILED
Mar 15, 2018
Secretary of State
CC8307565770

The above named entity submits this statement for the purpose of changing its registered office or registered agent, or both, in the State of Florida.

SIGNATURE: _____

Electronic Signature of Registered Agent — Date

Officer/Director Detail :

Title	PRES	Title	SECRETARY
Name	PARDUS, DAN J	Name	PARDUS, ALICE M
Address	4133 SADDLE CLUB DR	Address	4133 SADDLE CLUB DR
City-State-Zip	NEW SMYRNA BEACH FL 32168	City-State-Zip	NEW SMYRNA BEACH FL 32168

I hereby certify that the information indicated on this report or supplemental report is true and accurate and that my electronic signature shall have the same legal effect as if made under oath; that I am an officer or director of the corporation or the receiver or trustee empowered to execute this report as required by Chapter 607, Florida Statutes; and that my name appears above, or on an attachment with all other like empowered.

SIGNATURE: DAN PARDUS — PRESIDENT — 03/15/2018

Electronic Signature of Signing Officer/Director Detail — Date

Attachment: Danus Proposal (2019-R-38 : Lift Station #13 Rehabilitation)

FLORIDA DEPARTMENT of STATE

Sunbiz.org DIVISION of CORPORATIONS
an official State of Florida website

Detail by Entity Name

Florida Profit Corporation
DANUS UTILITIES INC

Filing Information

Document Number	P09000053628
FEI/EIN Number	27-0404772
Date Filed	06/22/2009
Effective Date	06/20/2009
State	FL
Status	ACTIVE

Principal Address

2320 BEARDALL AVE
SANFORD, FL 32771

Changed: 03/15/2018

Mailing Address

P.O. BOX 291671
PORT ORANGE, FL 32129

Changed: 03/15/2018

Registered Agent Name & Address

PARDUS, DAN J
4133 Saddle Club Dr
New Smyrna Beach, FL 32168

Address Changed: 07/01/2015

Officer/Director Detail

Name & Address

Title PRES

PARDUS, DAN J
4133 Saddle Club Dr
New Smyrna Beach, FL 32168

Title Secretary

Attachment: Danus Proposal (2019-R-38 : Lift Station #13 Rehabilitation)

Title Secretary

Pardus. Alice M
4133 Saddle Club Dr
New Smyrna Beach. FL 32168

Annual Reports

Report Year	Filed Date
2016	03/08/2016
2017	03/27/2017
2018	03/15/2018

Document Images

[illegible] -- ANNUAL REPORT	View image in PDF format
[illegible] -- ANNUAL REPORT	View image in PDF format
[illegible] -- ANNUAL REPORT	View image in PDF format
[illegible] -- ANNUAL REPORT	View image in PDF format
[illegible] -- ANNUAL REPORT	View image in PDF format
[illegible] -- ANNUAL REPORT	View image in PDF format
[illegible] -- ANNUAL REPORT	View image in PDF format
[illegible] -- ANNUAL REPORT	View image in PDF format
[illegible] -- ANNUAL REPORT	View image in PDF format
[illegible] -- Dissolution	View image in PDF format

Attachment: Danus Proposal (2019-R-38 : Lift Station #13 Rehabilitation)

CITY OF HOLLY HILL

LIFT STATION #13 REHABILITATION

BID # 19-WW05

MAY 2019

BID SET

SHEET INDEX

SHEET NUMBER	SHEET TITLE
G-001	COVER SHEET
G-021	EXISTING SITE AND BYPASS PLAN
C-051	DEMOLITION PLAN
C-201	SITE PLAN AND GENERAL NOTES
C-301	TYPICAL SECTIONS
C-501	DETAILS
C-502	DETAILS
E-001	ELECTRICAL PLAN AND DETAILS

LOCATION MAP

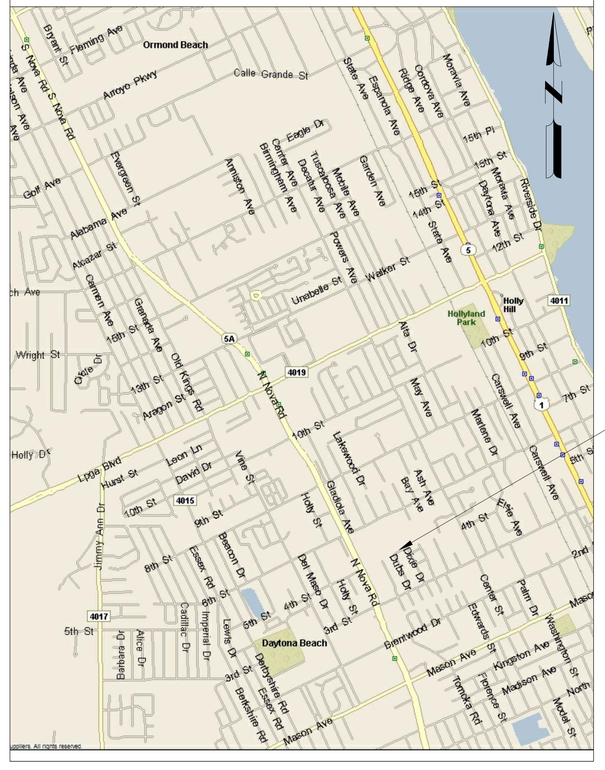

PROJECT LOCATION

VICINITY MAP

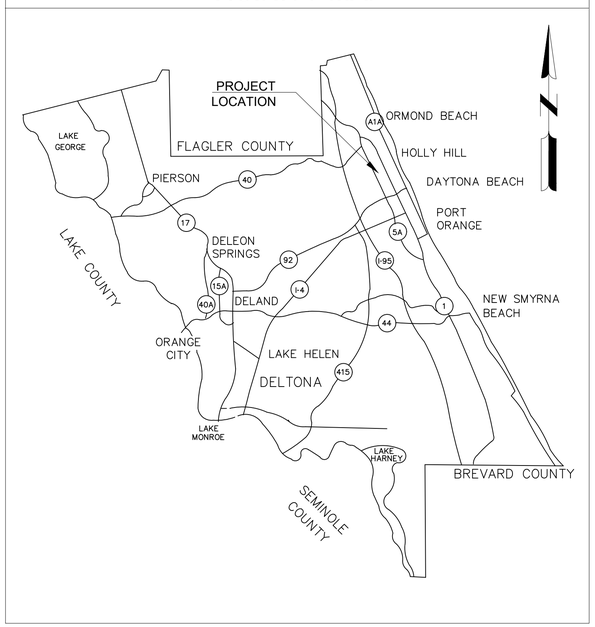

CITY OFFICIALS

MAYOR	Chris Via
CITY MANAGER	Joseph Forte

COMMISSIONERS

DISTRICT 1	John Penny
DISTRICT 2	Penny Currie
DISTRICT 3	John C. Danio
DISTRICT 4	Roy Johnson

Know what's below. Call before you dig.

Mead & Hunt

Mead and Hunt, Inc.
4401 Eastport Parkway
Port Orange, FL 32127
phone: 386-761-6810
meadhunt.com
FL Cert. #26730

These documents shall not be used for any purpose or project for which it is not intended. Mead & Hunt shall be indemnified by the client and held harmless and defended from all claims, damages, liabilities, losses, and expenses, including attorneys' fees and costs, arising out of such misuse or reuse of the documents. In addition, unauthorized reproduction of these documents, in part or as a whole, is prohibited.

CITY OF HOLLY HILL
LIFT STATION #13 REHABILITATION

DUBS DRIVE/5TH STREET
HOLLY HILL FL

ISSUED

02/08/19	60% DESIGN
03/20/19	90% DESIGN
04/2019	REVISED
05/02/19	BID SET

ISSUED FOR BIDDING

M&H NO.:	1000710-181066.01
DATE:	MAY 2019
DESIGNED BY:	CN
DRAWN BY:	ADC
CHECKED BY:	AMG

DO NOT SCALE DRAWINGS

SHEET CONTENTS
COVER SHEET

SHEET NO.
G-001

Attachment: Holly Hill LS 13 Rehabilitation, Bid Set Plans (2019-R-38 : Lift Station #13 Rehabilitation)

\\CORP.MEADHUNT.COM\SHAREDFOLDERS\ENTP\1000710\181066.01\TECH\CAD\DRAWINGS\G-001 COVER SHEET.DWG
5/2/2019 11:01:27 AM

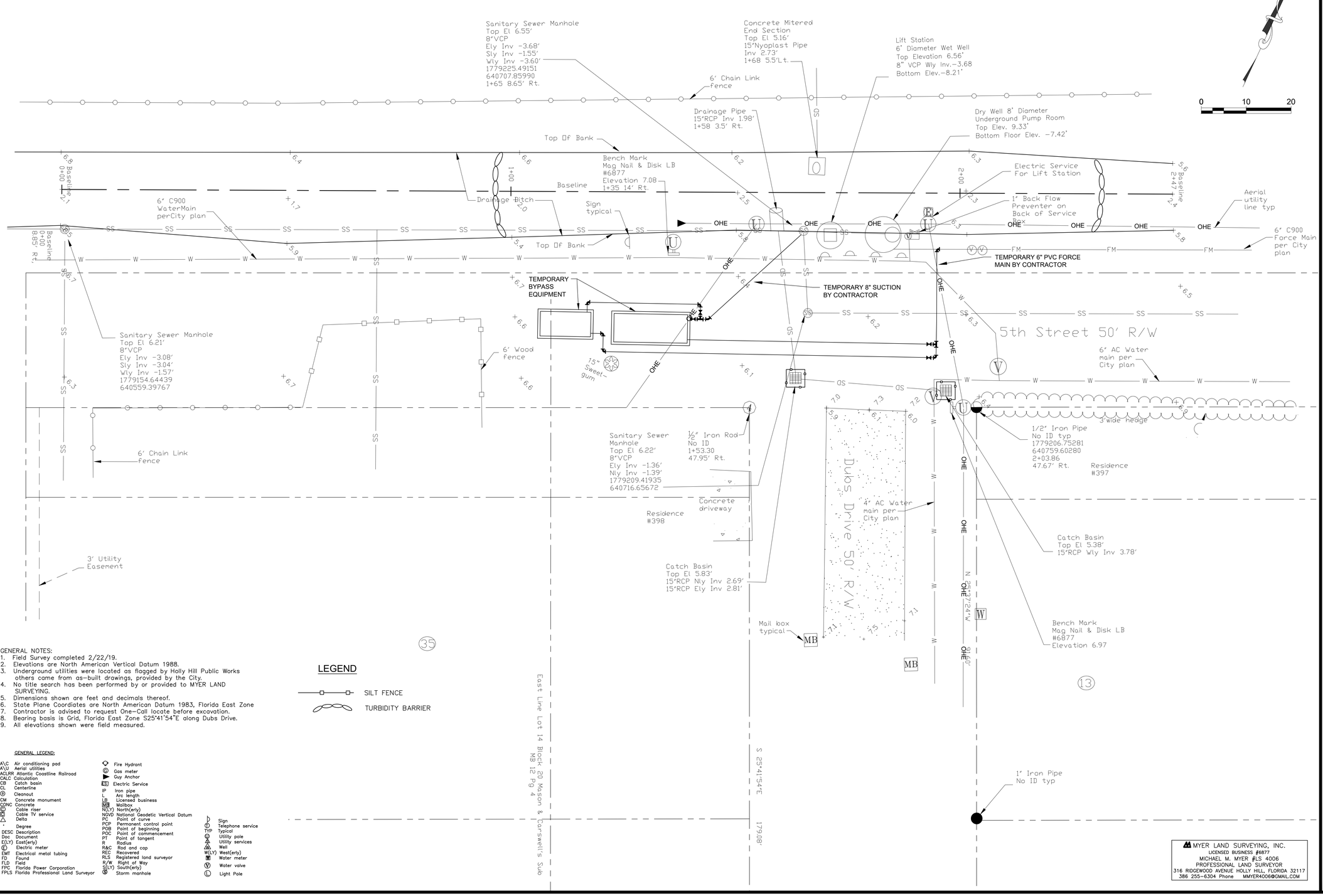

GENERAL NOTES:
1. Field Survey completed 2/22/19.
2. Elevations are North American Vertical Datum 1988.
3. Underground utilities were located as flagged by Holly Hill Public Works others came from as-built drawings, provided by the City.
4. No title search has been performed by or provided to MYER LAND SURVEYING.
5. Dimensions shown are feet and decimals thereof.
6. State Plane Coordiates are North American Datum 1983, Florida East Zone
7. Contractor is advised to request One-Call locate before excavation.
8. Bearing basis is Grid, Florida East Zone S25°41'54"E along Dubs Drive.
9. All elevations shown were field measured.

LEGEND

SILT FENCE

TURBIDITY BARRIER

GENERAL LEGEND:

A\C Air conditioning pad
A\U Aerial utilities
ACLRR Atlantic Coastline Railroad
CALC Calculation
CB Catch basin
CL Centerline
Ⓒ Cleanout
CM Concrete monument
CONC Concrete
Ⓒ Cable riser
Ⓒ Cable TV service
△ Delta
° Degree
DESC Description
Doc Document
E(LY) East(erly)
Ⓔ Electric meter
EMT Electrical metal tubing
FD Found
FLD Field
FPC Florida Power Corporation
FPLS Florida Professional Land Surveyor
Fire Hydrant
Ⓖ Gas meter
Guy Anchor
Ⓢ Electric Service
IP Iron pipe
L Arc length
LB Licensed business
MB Mailbox
N(LY) North(erly)
NGVD National Geodetic Vertical Datum
PC Point of curve
PCP Permanent control point
POB Point of beginning
POC Point of commencement
PT Point of tangent
R Radius
R&C Rod and cap
REC Recovered
RLS Registered land surveyor
R/W Right of Way
S(LY) South(erly)
Ⓢ Storm manhole
Sign
Ⓣ Telephone service
TYP Typical
Ⓟ Utility pole
Utility services
Well
W(LY) West(erly)
Ⓦ Water meter
Ⓥ Water valve
Ⓛ Light Pole

MYER LAND SURVEYING, INC.
LICENSED BUSINESS #6877
MICHAEL M. MYER #LS 4006
PROFESSIONAL LAND SURVEYOR
316 RIDGEWOOD AVENUE HOLLY HILL, FLORIDA 32117
386 255-6304 Phone MMYER4006@GMAIL.COM

Mead & Hunt
Mead and Hunt, Inc.
4401 Eastport Parkway
Port Orange, FL 32127
phone: 386-761-6810
meadhunt.com
FL Cert. #26730

These documents shall not be used for any purpose or project for which it is not intended. Mead & Hunt shall be indemnified by the client and held harmless and defended from all claims, damages, liabilities, losses, and expenses, including attorneys' fees and costs, arising out of such misuse or reuse of the documents. In addition, unauthorized reproduction of these documents, in part or as a whole, is prohibited.

CITY OF HOLLY HILL LIFT STATION #13 REHABILITATION

DUBS DRIVE/5TH STREET
HOLLY HILL FL

ISSUED

02/08/19	60% DESIGN
03/20/19	90% DESIGN
04/2019	REVISED
05/02/19	BID SET

ISSUED FOR BIDDING

M&H NO.: 1000710-181066.01
DATE: MAY 2019
DESIGNED BY: CN
DRAWN BY: ADC
CHECKED BY: AMG
DO NOT SCALE DRAWINGS

SHEET CONTENTS
EXISTING SITE AND BYPASS PLAN

SHEET NO.
G-021

Attachment: Holly Hill LS_13 Rehabilitation_Bid Set Plans (2019-R-38 : Lift Station #13 Rehabilitation)

LIFT STATION WETWELL CONSTRUCTION NOTES:

1. WASTEWATER FLOW SHALL BE MAINTAINED AT ALL TIMES. BYPASS PUMPING SHALL BE REQUIRED.
2. ALL PIPING AND FITTINGS IN WET WELLS TO BE ASSEMBLED USING 316 STAINLESS STEEL BOLTS AND NUTS ONLY.
3. ELECTRICAL PERMIT TO BE OBTAINED FROM CITY OF HOLLY HILL PRIOR TO BEGINNING WORK ON ANY ELECTRICAL WIRING, EQUIPMENT, ETC. ALL ELECTRICAL WIRING TO COMPLY WITH NATIONAL ELECTRICAL CODE.
4. THREE COPIES OF THE LIFT STATION OPERATING MANUAL TO BE PROVIDED TO THE PUBLIC UTILITIES DEPARTMENT PRIOR TO FINAL ACCEPTANCE OF THE LIFT STATION.
5. EMERGENCY "HIGH LEVEL" WET WELL FLASHING ALARM LIGHT AND AUDIBLE ALARM HORN REQUIRED.
6. LINKABLE FUSED ELECTRICAL DISCONNECT REQUIRED.
7. ALL PUMP STATION WIRING SHALL BE STANDARD COPPER AND CONDUIT TO HAVE APPROPRIATE SEAL-OFFS.
8. THREE PHASE POWER AND MOTORS REQUIRED.
9. 4" SCH40 PVC CONDUIT FOR FLOAT WIRES SHALL BE INSTALLED FOR ALL OFFSET LIFT STATIONS.
10. LIFT STATION START-UP INSPECTIONS SHALL BE SCHEDULED AND COORDINATED THROUGH THE CITY'S SITE INSPECTOR (48 HOURS IN ADVANCE). UPON DETERMINING THAT ALL WORK IS COMPLETE AND READY THE CITY INSPECTOR SHALL THEN NOTIFY THE CITY, CONTRACTOR, ENGINEER OF RECORD, POWER COMPANY, AND THE PUMP SUPPLIER OF THE OFFICIAL START-UP INSPECTION DATE AND TIME. UPON COMPLETION THE ENGINEER OF RECORD SHALL PROVIDE TO THE CITY A SUMMARY OF THE RESULTS OF THAT TEST AND A LIST OF ALL PUNCH LIST ITEMS OUTSTANDING
11. PUMP STATION FINAL INSPECTION AND ACCEPTANCE PROCEDURES:
    - WET WELL TO BE CLEAN AND DRY PRIOR TO ALL INSPECTIONS BY CITY PERSONNEL
    - BEFORE FINAL APPROVAL OR ACCEPTANCE OF ANY PUMP STATION BY THE CITY, THERE SHALL BE FIELD INSPECTIONS MADE BY THE CITY'S REPRESENTATIVE AND INSPECTOR. THE FIELD INSPECTIONS SHALL SHOW THAT THE PUMP STATION IS FULLY OPERATIONAL AND ALL NECESSARY APPURTENANCES HAVE BEEN INSTALLED AND CONSTRUCTED IN ACCORDANCE WITH THE PLANS AND THE STANDARD CONSTRUCTION DETAILS AS APPROVED BY THE PUBLIC UTILITIES DEPARTMENT PRIOR TO CONSTRUCTION.
    - UPON COMPLETION AND BEFORE ACCEPTANCE OF THE PUMP STATION INSTALLATION, THE CONTRACTOR SHALL TEST ALL THE PUMPING EQUIPMENT TO DEMONSTRATE SATISFACTORY PERFORMANCE. IF DEFICIENCIES OCCUR, THE CONTRACTOR SHALL CORRECT THEM ACCORDINGLY AND EQUIPMENT SHALL BE RETESTED.
    - REPRESENTATIVES FROM THE PUMPING EQUIPMENT MANUFACTURER, ENGINEER, CONTRACTOR, CITY AND THE ELECTRICAL CONTRACTOR SHALL BE PRESENT AT THE PUMP STATION START-UP TESTING AND FOR THE FINAL SITE INSPECTION.
    - ALL PUMP STATION EQUIPMENT SHALL BE TESTED AT THE START-UP. THE MANUFACTURER / CONTRACTOR SHALL PROVIDE A FORMAL TEST PROCEDURE AND FORMS FOR RECORDING DATA. THE TESTS SHALL BE PERFORMED BY THE CONTRACTOR IN THE PRESENCE OF A CITY REPRESENTATIVE AND CITY INSPECTOR. THE RECORDED FIELD DATA SHALL BE SUBMITTED TO THE PUBLIC UTILITIES DEPARTMENT ALONG WITH THE PUMP STATION ASBUILT AND PUMP STATION MAINTENANCE AND OPERATING MANUALS.
    - ALL DISTURBED AREAS SHALL BE GRADED AND SODDED. FINAL ACCEPTANCE OF THE PUMP STATION WILL NOT BE GIVEN UNTIL EFFECTIVE EROSION AND POSITIVE DRAINAGE CONTROL HAVE BEEN PROVIDED.
    - PUMP STATIONS SHALL ONLY BE CONSIDERED AS ACCEPTABLE FOR OPERATION BY THE CITY UPON WRITTEN CONFIRMATION BY THE PUBLIC UTILITIES DEPARTMENT.
    - IN THE EVENT THAT THE STATION OR ANY OF IT'S ASSOCIATED COMPONENTS ARE DETERMINED TO BE DEFICIENT AT THE START UP, THEN THE CITY RESERVES THE RIGHT TO REQUIRE A COMPLETE NEW START UP WITH ALL PARTIES PRESENT AS NOTED.

DEMOLITION NOTES:

1. REMOVE TOP SECTION OF WET WELL TO 3'-0" BELOW EXISTING GRADE OR CLOSEST PRECAST SECTION. SEE PROPOSED MECHANICAL FOR NEW WET WELL SECTION.
2. SEAL ALL WET WELL PENETRATIONS WITH NON-SHRINK H_2S RESISTANT GROUT (TYPICAL).
3. CITY SHALL HAVE OPTION TO RETAIN ANY EQUIPMENT REMOVED BY THE CONTRACTOR DURING DEMOLITION. ANY REMAINING EQUIPMENT SHALL BE THE PROPERTY OF THE CONTRACTOR AND SHALL BE REMOVED FROM THE SITE.
4. REMOVE ALL EXISTING PUMPS, PIPING, ELECTRICAL GEAR AND ALL OTHER EQUIPMENT FROM DRY PIT PUMP STATION. REMOVE TOP OF EXISTING STATION TO MIN. 5 FEET BELOW EXISTING GRADE. FILL REMAINING STATION WITH FLOWABLE FILL TO MIN. 5 FEET BELOW GRADE. FILL TO GRADE WITH CLEAN COMPACTED TOP SOIL. PROPOSED VALVE VAULT TO BE INSTALLED THIS LOCATION. SEE PROPOSED LIFT STATION SHEET 4.
5. REMOVE EXISTING GROUT FILLETS FROM WET WELL.
6. UPON COMPLETION OF PROJECT, SOD ALL DISTURBED AREAS WITH BAHIA SOD.

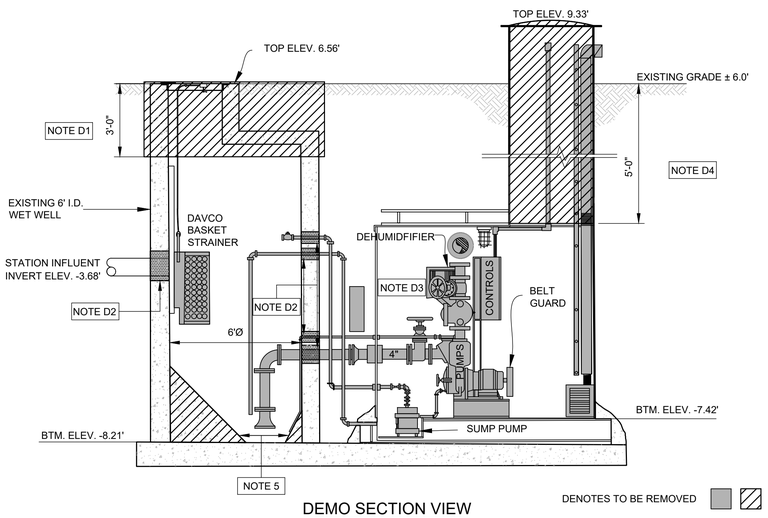

DEMO SECTION VIEW

NOT TO SCALE

DENOTES TO BE REMOVED

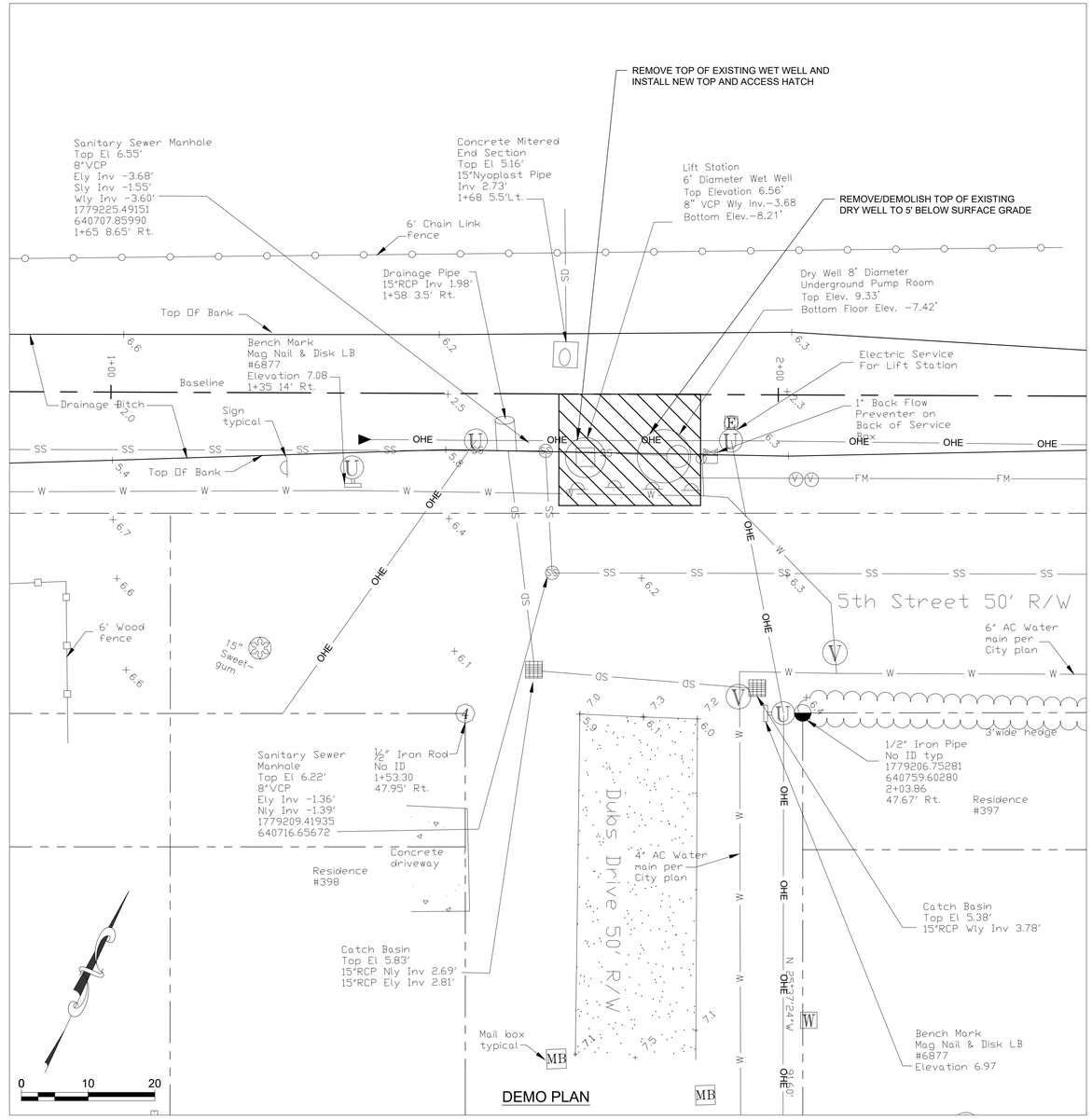

DEMO PLAN

UTILITY INFORMATION PROVIDED TO OR COLLECTED BY MEAD & HUNT DURING DESIGN										
UTILITY TYPE	UTILITY COMPANY	CONTACT	PHONE	E-MAIL	PRELIMINARY PLANS PROVIDED TO UTILITY (DATE)	INFORMATION QUALITY LEVEL AND DATE RECEIVED				FINAL PLANS PROVIDED TO UTILITY (DATE)
						LEVEL A/4	LEVEL B/3	LEVEL C/2	LEVEL D/1	
WATER	CITY OF HOLLY HILL	WALT SMYSER	(386) 248-9463	wsmyser@hollyhillfl.org	4/3/19					
WASTEWATER	CITY OF HOLLY HILL	WALT SMYSER	(386) 248-9463	wsmyser@hollyhillfl.org	4/3/19					
ELECTRIC DISTRIBUTION	FPL	SHAVONTI ARCHER	(386) 586-6432	shavonti.archer@fpl.com	4/3/19			5/1/19		
ELECTRIC TRANSMISSION	FPL	RALPH DIAZ	(561) 904-3617	ralph.diaz@fpl.com	4/3/19			4/10/19		
PHONE	AT&T FLORIDA	KIRBY SPENCER	(386) 257-7930	ks2488@att.com	4/3/19					
TV CABLE	BH NETWORKS / SPECTRUM	STACY STAFFORD	(386) 527-6836	stacy.stafford@charter.com	4/3/19					
GAS	TECO PEOPLES GAS	HEATH M MCARDLE	(904) 443-7317 (904) 545-8958	hmmcardle@tecoenergy.com	4/3/19					
SIGNALIZATION	n/a									
F.O. CABLE	CENTURY LINK / LEVEL 3	XAN MARIE RYPKEMA	(720) 888-7568	NationalRelo@centurylink.com	4/3/19					

Mead & Hunt
Mead and Hunt, Inc.
4401 Eastport Parkway
Port Orange, FL 32127
phone: 386-761-6810
meadhunt.com
FL Cert. #26730

These documents shall not be used for any purpose or project for which it is not intended. Mead & Hunt shall be indemnified by the client and held harmless and defended from all claims, damages, liabilities, losses, and expenses, including attorneys' fees and costs, arising out of such misuse or reuse of the documents. In addition, unauthorized reproduction of these documents, in part or as a whole, is prohibited.

CITY OF HOLLY HILL LIFT STATION #13 REHABILITATION

DUBS DRIVE/5TH STREET
HOLLY HILL FL

ISSUED

02/08/19	60% DESIGN
03/20/19	90% DESIGN
04/20/19	REVISED
05/02/19	BID SET

ISSUED FOR BIDDING

M&H NO.: 1000710-181066.01
DATE: MAY 2019
DESIGNED BY: CN
DRAWN BY: ADC
CHECKED BY: AMG
DO NOT SCALE DRAWINGS

SHEET CONTENTS
DEMOLITION PLAN

SHEET NO.
C-051

Attachment: Holly Hill LS_13 Rehabilitation_Bid Set Plans (2019-R-38 : Lift Station #13 Rehabilitation)

SANITARY SEWER CONSTRUCTION NOTES

1. THE CITY'S PUBLIC UTILITIES DEPARTMENT (248-9463) SHALL BE GIVEN A MINIMUM OF 48 HOURS ADVANCE NOTICE (NOT INCLUDING HOLIDAYS OR WEEKENDS) PRIOR TO BEGINNING ANY SANITARY SEWER CONSTRUCTION.
2. ALL GRAVITY SANITARY SEWER MAIN LINES SHALL BE 8" DIAMETER MINIMUM. COMMERCIAL SERVICE LATERALS WITH MULTIPLE CONNECTIONS SHALL BE GREEN 6" DIAMETER OR LARGER. ALL SINGLE FAMILY RESIDENTIAL SERVICE LATERALS SHALL BE 4" SINGLE SERVICES.
3. ALL GRAVITY SANITARY SEWER LINES SHALL BE GREEN PVC SDR 26, ASTM D-3034. IN PLACES WHERE A MINIMUM COVER OF 4.0' CANNOT BE MAINTAINED, AWWA C-900 OR C-905 GREEN PVC DR-25, CLASS 100 OR CONCRETE ENCASEMENT SHALL BE USED. WATER LINES, RECLAIMED LINES, AND STORM DRAINAGE CROSSINGS SHALL ALSO FOLLOW THE CONCRETE ENCASEMENT REQUIREMENT PER THESE STANDARDS AND AS PER REGULATORY REQUIREMENTS.
4. MINIMUM GRAVITY SANITARY SEWER SLOPES ARE AS FOLLOWS:
   8" PIPE 0.40%
   10" PIPE 0.30%
   12" PIPE 0.22%
5. MAXIMUM DEPTH OF SANITARY MANHOLES SHALL BE 15.0'. MAXIMUM DEPTH OF WET WELLS SHALL BE 20.0'
6. GRAVITY SANITARY SEWER LINES SHALL BE INSTALLED WHENEVER POSSIBLE UNDER PAVED AREAS WITHIN PUBLIC RIGHTS-OF-WAY. UTILITY EASEMENTS SHALL BE PROVIDED WHENEVER PUBLICLY-OWNED SEWER LINES ARE CONSTRUCTED OUTSIDE OF A PUBLIC RIGHT-OF-WAY.
7. GRAVITY SANITARY SEWER LINE CONSTRUCTION SHALL BE ACCOMPLISHED BY THE USE OF A LASER INSTRUMENT UNLESS ANOTHER METHOD IS PREVIOUSLY APPROVED BY THE CITY.
8. THE CONTRACTOR SHALL AT ALL TIMES, DURING PIPE LAYING OPERATIONS, DEWATER THE GROUND SUFFICIENTLY TO KEEP THE GROUNDWATER ELEVATION A MINIMUM OF 6" BELOW THE PIPE BEING LAID WITHIN THE AREA OF THE TRENCH.
9. ALL PIPES SHALL BE LAID ON A FIRM FOUNDATION. SOFT OR SPONGY BEDDING FOR PIPES IS NOT ACCEPTABLE. ANY UNSUITABLE MATERIAL SHALL BE REMOVED AND REPLACED WITH A DRY, COMPACTED, GRANULAR MATERIAL SATISFACTORY TO THE CITY.
10. ON ALL EXCAVATION AND BACKFILLING THE CONTRACTOR SHALL PROVIDE ADEQUATE SHEETING AND BRACING IN ORDER TO PROVIDE FOR THE SAFETY OF WORKMEN, AS WELL AS REPRESENTATIVES OF THE CITY, THE DESIGN ENGINEER, AND THE DEVELOPER.
11. ALL TRENCHES SHALL BE BACKFILLED WITH CLEAN FILL AND COMPACTED TO THE SPECIFIED MINIMUM COMPACTION (95% IN UNPAVED AREAS AND 98% IN PAVED AREAS) OF THE OPTIMUM DENSITY OF THAT MATERIAL BASED ON THE AASHTO T-180 MODIFIED PROCTOR TEST.
12. THE CONTRACTOR SHALL EMPLOY AN INDEPENDENT TESTING LABORATORY AT HIS OWN EXPENSE TO INSURE THAT COMPACTION OF ALL FILL MATERIAL IS COMPLETED PROPERLY. TESTS SHALL BE DONE ONE FOOT ABOVE THE PIPE AND THEN AT ONE FOOT VERTICAL INTERVALS UNTIL FINAL GRADE IS REACHED. TESTING SHALL BE COMPLETED AND TEST DOCUMENTS SUBMITTED TO THE CITY AT A MINIMUM FREQUENCY OF ONE SET OF TESTS BETWEEN EACH MANHOLE AND ONE ADDITIONAL SET OF TESTS AT EVERY MANHOLE. IDENTIFICATION OF TEST LOCATIONS SHALL BE CLEARLY INDICATED ON TEST REPORTS. TEST RESULTS SHALL BE FORWARDED PROMPTLY TO THE CITY'S DESIGNATED SITE INSPECTOR.
13. THE CONTRACTOR SHALL INSTALL A METALLIZED FOIL LOCATOR TAPE, OR SIMILAR DEVICE AS MAY BE APPROVED BY THE CITY FOR THE FULL LENGTH OF ALL PVC SEWAGE FORCE MAINS. THIS PIPE LOCATOR AID SHALL BE INSTALLED BETWEEN 15" AND 24" BELOW FINISHED GRADE OR AS DIRECTED BY THE MANUFACTURER. TAPE SHALL BE COLOR CODED GREEN FOR SANITARY SEWER AND FORCE MAIN. A No. 12 WIRE SHALL BE INSTALLED WITH WIRE BROUGHT UP AT ALL VALVES.
14. ALL TESTING REQUIRED BY THE CITY SHALL BE PAID FOR BY THE CONTRACTOR/DEVELOPER.
15. ALL LOCAL COLLECTION SANITARY SEWER MANHOLES SHALL BE PRECAST WITH A MINIMUM INSIDE DIAMETER OF 4 FEET.
16. STANDARD MANHOLES SHALL BE LOCATED AT INTERVALS NOT EXCEEDING 350 FEET.
17. ALL SEWER FITTINGS TO BE "HARCO", MULTIFITTINGS, VASSALLO, PLASTIC TREADS, HEAD OR CITY APPROVED EQUAL.
18. MANHOLE RIMS SHALL MATCH FLUSH WITH THE FINISH GRADE ELEVATION IN PAVED AREAS AND A MINIMUM OF 0.2 FEET AND MAXIMUM OF 0.5 FEET ABOVE GRADE GENERALLY IN UNPAVED AREAS.
19. THE CONTRACTOR SHALL CONSTRUCT SANITARY SEWER MANHOLES IN SUCH A WAY THAT SEWER LINES DO NOT INTERSECT SEALED JOINTS BETWEEN SECTIONS OF THE MANHOLE.
20. RUBBER BOOTS AND STAINLESS STEEL BANDS SHALL BE UTILIZED IN THE CONNECTION OF THE SEWER MAIN TO THE MANHOLES (SEE STANDARD MANHOLE AND BOOT DETAIL).
21. INDIVIDUAL SANITARY SERVICE CONNECTORS ON NEW CONSTRUCTION SHALL NOT BE CONNECTED DIRECTLY INTO MANHOLES, AND MUST CONNECTED TO SEWER MAIN LINES BY USE OF WYE CONNECTIONS, UNLESS OTHERWISE BE APPROVED BY THE CITY.
22. FOR SINGLE FAMILY HOMES, SINGLE FOUR INCH SEWER SERVICES LATERALS SHALL BE CONSTRUCTED AT EACH LOT OR UNIT AND LOCATED ON THE DOWNSTREAM SIDE OF THE LOT CENTER LINE. THESE SERVICES SHALL BE EXTENDED 4 FEET ABOVE GROUND AT THE PROPERTY LINE WITH A PVC RISER AND PLUG BEING EASILY VISIBLE FROM THE ROAD. RUBBER SEAL FITTINGS SHALL BE USED ON ALL LINES. NO GLUED JOINTS ARE PERMITTED ON LATERALS.
23. FOR MULTI-FAMILY AND COMMERCIAL SITES, 6 INCH MINIMUM SEWER SERVICES AND CLEANOUTS SHALL BE PROVIDED AS APPROVED BY THE CITY.
24. SANITARY SEWER LIFT STATIONS AND FORCE MAINS, SIZE, MATERIAL, AND DESIGNS SHALL BE APPROVED BY THE CITY. LIFT STATIONS SHALL BE CONSTRUCTED WITH A MINIMUM WET WELL INTERIOR DIAMETER OF 5 FEET. FORCE MAINS SHALL BE A MINIMUM 6 INCH DIAMETER.
25. IT SHALL BE THE RESPONSIBILITY OF THE DESIGN ENGINEER TO PREPARE AND SUBMIT FLOTATION CALCULATIONS TO SIZE THE BASE OF THE WET WELL, AND ANY MANHOLES AS DEEMED NECESSARY BY THE CITY.
26. SANITARY SEWER DROP MANHOLES SHALL ONLY BE USED UNDER SPECIAL CONDITIONS AS APPROVED BY THE CITY. DROPS LESS THAN 24" SHALL NOT BE ALLOWED.
27. ALL SANITARY SEWER MANHOLE COVERS SHALL HAVE THE WORDS "HOLLY HOLLY, FLORIDA SANITARY SEWER" CAST INTO THEM.
28. ALL SANITARY SEWER FORCE MAINS, INCLUDING FITTINGS, SHALL BE PVC AWWA C-900, OR C-905 (COLOR "GREEN") (PRESSURE FITTINGS, PRESSURE CLASS 150 OR C-907) FITTINGS SHALL BE HARCO PVC GASKETED FITTINGS, MULTI-FITTINGS (OR APPROVED EQUAL.) THE FORCE MAIN MINIMUM DEPTH OF COVER SHALL BE 36".
29. ALL SANITARY SEWER FORCE MAINS SHALL USE A THRUST RESTRAINT JOINT METHOD IN COMPLIANCE WITH THE DUCTILE IRON PIPE RESEARCH ASSOCIATION GUIDELINES MODIFIED TO ACCOMMODATE PVC PIPE BY FOLLOWING THE RECOMMENDED INCREASE IN RESTRAINT LENGTH CORRESPONDING TO THE INSTALLATION OF POLYETHYLENE WRAP. IN NO INSTANCE SHALL THRUST BLOCKS BE PERMITTED.
30. SANITARY SEWER MANHOLES WHICH HAVE SEWER FORCE MAINS DISCHARGING DIRECTLY INTO THEM SHALL BE FIBERGLASS OR POLY-ETHYLENE LINED. RETRO-FITTING OF MANHOLES WITH LINERS SHALL BE REQUIRED WHEN NEW CONNECTIONS SUCH AS THIS ARE MADE. FIBERGLASS SHALL BE A MINIMUM 1/2" THICKNESS UNLESS APPROVED OTHERWISE BY THE CITY. OTHER TYPES OF LINING METHODS AND MATERIALS MAY BE CONSIDERED ON A CASE BY CASE BASIS. UNDER SPECIAL CIRCUMSTANCES WHERE HYDROGEN SULFIDE IS A MAJOR CONCERN MANHOLES UPSTREAM AND/OR DOWNSTREAM OF THE FORCE MAIN TIE-IN OR WET WELL MAY ALSO BE REQUIRED TO HAVE LININGS INSTALLED.
31. THE CITY SHALL REQUIRE ALL NEW SANITARY SEWER GRAVITY SYSTEMS TO BE SMOKE TESTED PRIOR TO FINAL ACCEPTANCE. ALL TESTING MUST BE DONE IN THE PRESENCE OF THE CITY'S DESIGNATED SITE INSPECTOR.
32. THE CITY OF HOLLY HILL RESERVES THE RIGHT TO REQUIRE THE DEVELOPER TO PERFORM VACUUM TESTING OF ALL SANITARY MANHOLES. AIR TEST SEWER MAINS, AND REQUIRES THAT ALL SANITARY SEWER MAIN LINES BE TELEVISED PRIOR TO FINAL ACCEPTANCE. LATERALS SHALL BE TELEVISED UPON DEMAND BY THE CITY PRIOR TO FINAL ACCEPTANCE WHEN IT IS SUSPECTED THAT A PROBLEM EXISTS.
33. ALL SEWER MAINS, PRIOR TO ACCEPTANCE BY THE CITY AND PRIOR TO ANY FINAL PAVING OPERATIONS, SHALL BE TELEVISED USING A "PAN AND TILT" CAMERA BY A CITY APPROVED CONTRACTOR. THE VIDEO SHALL BE NON-STOP WITH AUDIO DESCRIBING WHAT IS BEING REVIEWED. WRITTEN VIDEO LOGS DESCRIBING THE CONDITION OF THE LINES PER NASCO, PACP, AND MACP STANDARDS SHALL ACCOMPANY THE TAPE SUBMISSION TO THE CITY PRIOR TO COMMENCING ANY INSTALLATION OF ASPHALT OR CONCRETE PAVEMENT. RE-TAPING MAY BE REQUIRED BY THE CITY IF ADDITIONAL CLEARING OR CORRECTIVE ACTIONS ARE NECESSARY.
34. ALL MANHOLES CONSTRUCTED IN SIDE YARDS, BACKYARDS, AND EASEMENTS OUTSIDE OF THE RIGHT-OF-WAY SHALL BE OUTFITTED WITH FIBERGLASS LINERS IN COMPLIANCE WITH ASTM-3753 OR OTHER TYPES OF LINERS APPROVED BY THE CITY. IN ADDITION THE CITY MAY REQUIRE LINERS TO BE INSTALLED IN OTHER AREAS WHERE THE PUBLIC UTILITIES DEPARTMENT BELIEVES THE NEED IS JUSTIFIED SUCH AS IMMEDIATELY UPSTREAM OF FORCE MAINS CONNECTING TO GRAVITY MAINS.
35. ALL SEWER LINES WHICH ARE CONSTRUCTED OUTSIDE OF PUBLIC RIGHTS-OF-WAY WITHIN SIDE YARDS, BACKYARDS, AND OTHER POORLY ACCESSIBLE AREAS SHALL BE CONSTRUCTED OF C-900 PVC. ABSOLUTELY NO USE OF PLASTIC STYRENE FITTINGS SHALL BE ALLOWED.
36. SEWER LATERAL LOCATIONS SHALL BE MARKED ALONG THE OUTSIDE OF THE CURB WITH A SAW CUT "V", OR BY A METAL TAB SET INTO THE PAVEMENT.
37. CONTEC A-2000 PVC PIPE SHALL NOT BE ALLOWED FOR USE.
38. EZ-WRAP PLASTIC, AS MANUFACTURED BY PRESS SEAL GASKET CORPORATION, SHALL BE USED ON THE OUTSIDE OF ALL MANHOLE AND WETWELL JOINTS. APPLY ONE LAYER OF 9" WRAP CENTERED ON EACH JOINT. A CITY INSPECTOR SHALL PERSONALLY INSPECT ALL JOINT SEALS PRIOR TO BACKFILLING OPERATIONS.
39. ALL PROPOSED SEWER FORCE MAINS SHALL BE FLUSHED, PRESSURE TESTED AND CLEARED FOR SERVICE IN ACCORDANCE WITH THE LATEST AWWA STANDARDS AND THE FLORIDA DEPARTMENT OF ENVIRONMENTAL PROTECTION REQUIREMENTS. THE CONTRACTOR SHALL NOTIFY THE CITY'S DESIGNATED SITE INSPECTOR WHO SHALL COORDINATE WITH CITY PERSONNEL AT THE WATER OR WASTEWATER TREATMENT PLANT (AS APPROPRIATE) AT LEAST 48 HOURS PRIOR TO BEGINNING A FULL-DIAMETER FLUSH OF THE MAINS PRIOR TO THE COMMENCEMENT OF PRESSURE TESTING (SUBJECT TO AVAILABILITY).
40. THE CONTRACTOR SHALL BE REQUIRED TO PIG ALL FORCE MAINS IN EXCESS OF 6" IN DIAMETER AND PRIMARY TRANSMISSION MAINS LOCATED ON COLLECTOR AND ARTERIAL ROADWAYS. LAUNCHING AND EXTRACTION POINTS SHALL BE DETERMINED BY THE CONTRACTOR. ALL PIGGING OPERATIONS SHALL BE WITNESSED BY A HOLLY HILL REPRESENTATIVE OR CITY UTILITY INSPECTOR. (OPTIONAL AT CITY'S DESCRETION.)
41. AS A GENERAL RULE, THE NUMBER OF JOINTS SHALL BE LIMITED WHENEVER POSSIBLE. IN SPECIAL CASES WHERE A POINT REPAIR TO AN 8" TO 12" PVC SEWER MAIN IS REQUIRED, THE PROPER RIGID WRAP AROUND SLEEVE SUCH AS A JCM-210 OVERSIZED DUCTILE IRON COUPLING OR AN APPROVED EQUAL MAY BE ALLOWED BY SPECIAL APPROVAL BY THE CITY.
42. ALL IN-LINE SANITARY SEWER FORCE MAIN VALVES SHALL BE RESILIENT SEAT (AWWA C-509) VALVES FEATURING A LINED DUCTILE IRON BODY.
43. ALL TAPPING OF MAINS AND CORING OF MANHOLES SHALL BE WITNESSED BY THE CITY AND BILLED IN ACCORDANCE WITH THE ADOPTED FEE RESOLUTION. SCHEDULING OF THESE CONNECTIONS SHALL REQUIRE A MINIMUM 48 HOUR NOTIFICATION (MEASURED ON NORMAL WORK DAYS) DIRECTED TO THE CITY'S DESIGNATED SITE INSPECTOR WHO SHALL COORDINATE THE WORK DIRECTLY WITH THE PUBLIC UTILITIES DEPARTMENT. SUBSEQUENTLY, THE CONNECTION SHALL BE SCHEDULED TO COMMENCE BETWEEN 8:00 A.M. AND NOON ON THE APPROPRIATE DAY ESTABLISHED BY CITY.
44. WITH RESPECT TO TIE-IN CONNECTIONS AND CORING OPERATIONS, THE CITY RESERVES THE RIGHT TO REQUIRE CONNECTIONS TO BE PERFORMED DURING PERIODS OF LOW FLOW (MIDNIGHT TO 6:00 A.M.) IN ORDER TO MINIMIZE SERVICE DISRUPTION TO EXISTING CUSTOMERS.
45. ALL WORK PERFORMED UPON SANITARY SEWER FACILITIES OWNED OR PROPOSED TO BE OWNED BY THE CITY SHALL BE CONSTRUCTED BY AN UNDERGROUND UTILITY CONTRACTOR, OR LICENSED GENERAL CONTRACTOR, WHO IS LICENSED IN THE STATE OF FLORIDA AND REGISTERED WITH THE CITY.
46. UPON CONSTRUCTION COMPLETION AND ACCEPTANCE OF THE SYSTEM, IT SHALL BE THE DESIGN ENGINEER'S RESPONSIBILITY TO ENSURE THAT THE SYSTEM IS PROPERLY CERTIFIED AND ACCEPTED BY THE FLORIDA DEPARTMENT OF ENVIRONMENTAL PROTECTION AND AS-BUILTS ARE PROVIDED TO THE CITY PRIOR TO ANY USE OF THE SYSTEM.
47. FOR CONSTRUCTION PURPOSES, THE PLANS SHALL DIMENSION THE LOCATION, OF ALL FORCE MAINS MEASURED FROM THE BACK OF CURB (OR EDGE OF PAVEMENT, IF NO CURBING EXISTS).
48. ALL HDPE PIPE INSTALLED FOR SEWAGE FORCE MAINS SHALL BE SDR9 UNLESS SPECIFICALLY NOTED OTHERWISE. THE HDPE PIPE SHALL BE SIZED TO MATCH THE EXTERNAL DIAMETER OF THE PVC OR DIP TO WHICH IT IS ATTACHED.
49. LANDSCAPE PLANS SHALL CLEARLY DEPICT THE DESIGN LOCATION OF PLANTINGS RELATIVE TO THE LOCATION OF PUBLIC UTILITIES AND STORMWATER INFRASTRUCTURE IN ORDER TO EVALUATE POTENTIAL CONFLICTS.
50. ALL P.V.C. PIPE SHALL BE STORED IN SUCH A WAY AS TO PREVENT WARPING, DEFLECTION, OR DEFORMATION. ANY PIPE DEEMED TO BE MISSHAPED IN ANY WAY FOR ANY REASON SHALL BE REJECTED.
51. GREASE INTERCEPTORS ARE REQUIRED FOR ALL COMMERCIAL BUILDINGS HAVING KITCHEN, FOOD PREPARATION OR SERVING FACILITIES AND/OR MISCELLANEOUS USES. GREASE INTERCEPTORS CONSTRUCTED EXTERNAL TO BUILDINGS SHALL BE SIZED IN ACCORDANCE WITH FAC 64-E-6. CALCULATIONS TO DETERMINE SIZING REQUIREMENTS SHALL BE SUBMITTED AS PART OF BUILDING PERMITTING. AN INSPECTION MANHOLE MAY BE REQUIRED IMMEDIATELY DOWN STREAM OF THE GREASE INTERCEPTOR FOR INSPECTION PURPOSES, AS DEEMED APPROPRIATE BY THE CITY.
52. NO USED, RE-USED, RUSTED, SECOND HAND, OR ANY MATERIAL THAT IS NOT NEW SHALL BE USED IN ANY UTILITY IMPROVEMENT PROJECTS WITHIN THE CITY'S SERVICE AREA.
53. NEW OR RELOCATED, UNDERGROUND WATER MAINS SHALL BE LAID TO PROVIDE A HORIZONTAL DISTANCE OF AT LEAST SIX FEET, AND PREFERABLY TEN FEET, BETWEEN THE OUTSIDE OF THE WATER MAIN AND THE OUTSIDE OF ANY EXISTING OR PROPOSED GRAVITY OR PRESSURE-TYPE SANITARY SEWER, WASTEWATER FORCE MAIN, OR PIPELINE CONVEYING RECLAIMED WATER NOT REGULATED UNDER PART III OF CHAPTER 62-610, F.A.C. THE MINIMUM HORIZONTAL SEPARATION DISTANCE BETWEEN WATER MAINS AND GRAVITY-TYPE SANITARY SEWERS SHALL BE REDUCED TO THREE FEET WHERE THE BOTTOM OF THE WATER MAIN IS LAID AT LEAST SIX INCHES ABOVE THE TOP OF THE SEWER. NEW OR RELOCATED, UNDERGROUND WATER MAINS CROSSING ANY EXISTING OR PROPOSED GRAVITY OR VACUUM-TYPE SANITARY SEWER SHALL BE LAID SO THE OUTSIDE OF THE WATER MAIN IS AT LEAST SIX INCHES, AND PREFERABLY 12 INCHES, ABOVE OR AT LEAST 12 INCHES BELOW THE OUTSIDE OF THE OTHER PIPELINE. HOWEVER, IT IS PREFERABLE TO LAY THE WATER MAIN ABOVE THE OTHER PIPELINE. AT THE UTILITY CROSSINGS DESCRIBED ABOVE, ONE FULL LENGTH OF WATER MAIN PIPE SHALL BE CENTERED ABOVE OR BELOW THE OTHER PIPELINE SO THE WATER MAIN JOINTS WILL BE AS FAR AS POSSIBLE FROM THE OTHER PIPELINE. ALTERNATIVELY, AT SUCH CROSSINGS, THE PIPES SHALL BE ARRANGED SO THAT ALL WATER MAIN JOINTS ARE AT LEAST THREE FEET FROM ALL JOINTS IN VACUUM-TYPE SANITARY SEWERS, OR PIPELINES CONVEYING RECLAIMED WATER REGULATED UNDER PART III OF CHAPTER 62-610, F.A.C., AND AT LEAST SIX FEET FROM ALL JOINTS IN GRAVITY OR PRESSURE-TYPE SANITARY SEWERS, WASTEWATER FORCE MAINS, OR PIPELINES CONVEYING RECLAIMED WATER NOT REGULATED UNDER PART III OF CHAPTER 62-610, F.A.C

SITE PLAN NOTES:

1. REGRADE AND SOD ALL DISTURBED AREAS WITH TO MATCH EXISTING.
2. OTHER UNDERGROUND UTILITIES MAY EXIST. CONTRACTOR TO ADJUST WORK ACCORDINGLY.
3. FORCEMAIN VALVE REPLACEMENT WILL REQUIRE CITY WIDE SHUTDOWN. TIE-IN TO BE PERFORMED DURING LOW FLOW PERIOD (NIGHT) AND SCHEDULED WITH CITY 72 HRS IN ADVANCE.

RESTORATION NOTES

1. THE CONTRACTOR SHALL BE RESPONSIBLE FOR ALL DAMAGE TO AND REPLACEMENT OF EXISTING UTILITIES. REPLACEMENT SHALL BE TO THE COMPLETE SATISFACTION OF THE ENGINEER.
2. THE CONTRACTOR SHALL PRESERVE FROM DAMAGE ALL PROPERTY ALONG THE LINE OF WORK, OR IN THE VICINITY THEREOF, OR IS IN ANY WAY AFFECTED BY THE WORK THE REMOVAL OF OR DESTRUCTION OF, WHICH IS NOT CALLED FOR BY THE PLANS. WHEREVER SUCH PROPERTY IS DAMAGED DUE TO CONSTRUCTION ACTIVITIES OF THE CONTRACTOR, IT SHALL BE IMMEDIATELY RESTORED TO ITS ORIGINAL CONDITION BY THE CONTRACTOR.
3. ALL RESTORATION SHALL CONFORM TO THE CITY OF HOLLY HILL REQUIREMENTS AT NO COST TO THE OWNER.
4. ALL DISTURBED AREAS WITHIN COUNTY RIGHT-OF-WAY SHALL BE SODDED.

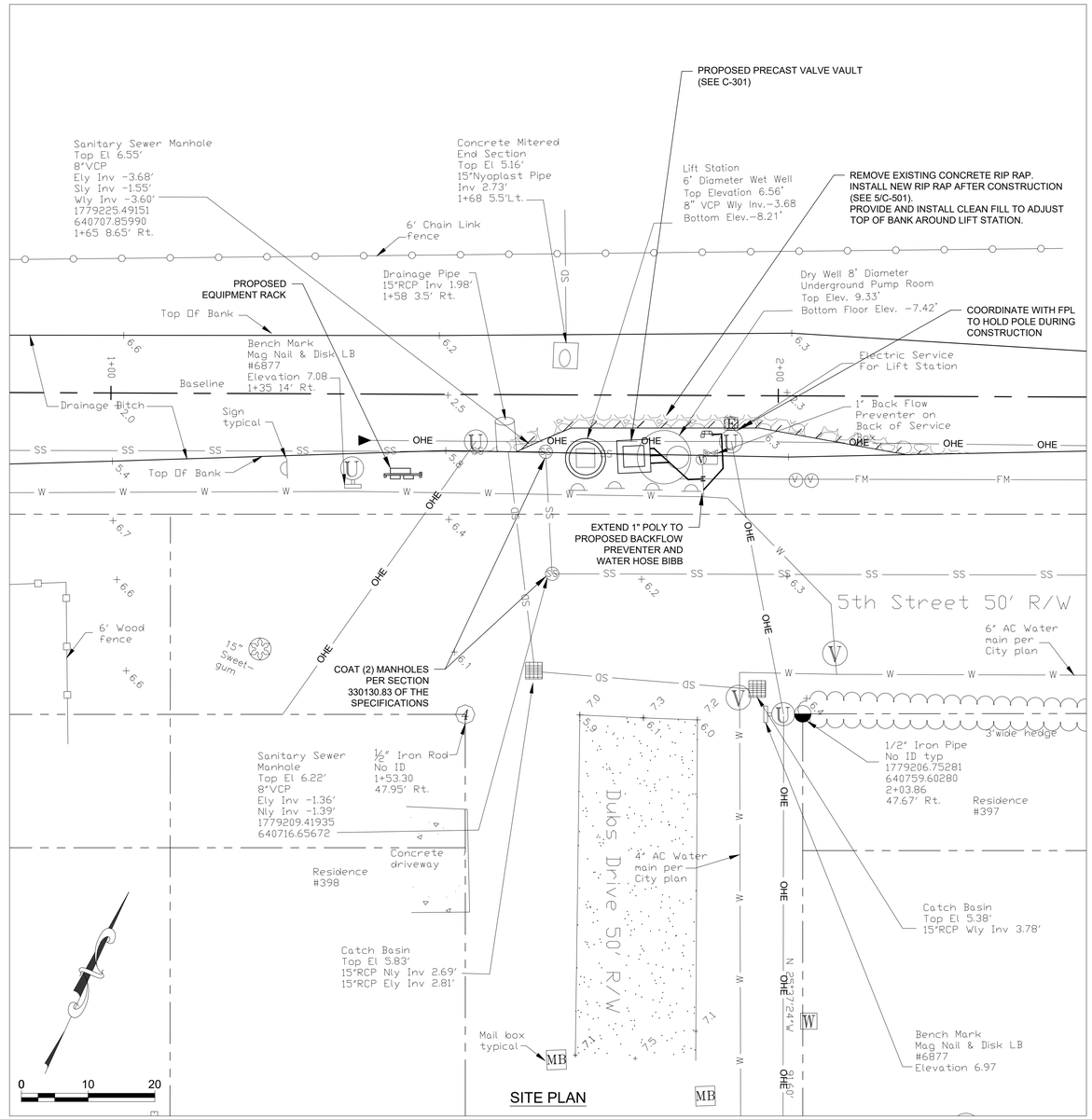

SITE PLAN

GENERAL CONSTRUCTION NOTES

1. ALL CONSTRUCTION SHALL BE DONE IN ACCORDANCE WITH ALL GOVERNING STANDARDS, SPECIFICATIONS, REGULATIONS AND PERTINENT DOCUMENTS.
2. UTILITIES & STRUCTURES AS SHOWN ON PLANS HAVE BEEN LOCATED FROM AVAILABLE RECORDS, BUT IT SHALL BE THE CONTRACTOR'S RESPONSIBILITY TO ASCERTAIN THE LOCATION OF ALL UTILITIES AND STRUCTURES TO BE ENCOUNTERED IN THE WORK AND TO AVOID CONFLICT WITH EXISTING FACILITIES.
3. THE OWNER SHALL NOT BE HELD RESPONSIBLE FOR INACCURACIES OR OMISSIONS IN THE LOCATION, ELEVATION AND DIMENSIONS OF EXISTING UTILITIES, STRUCTURES AND OTHER EXISTING FEATURES.
4. THE CONTRACTOR SHALL CONTACT THE ENGINEER'S OFFICE IMMEDIATELY ON ANY CONFLICTS ARISING DURING CONSTRUCTION OF ANY IMPROVEMENTS SHOWN ON THESE DRAWINGS.
5. THE CONTRACTOR SHALL PROVIDE FORTY-EIGHT (48) HOURS NOTICE TO THE VARIOUS UTILITY OWNERS PRIOR TO CONSTRUCTION.
6. THE CONTRACTOR SHALL CONDUCT HIS WORK AS TO INSURE LEAST POSSIBLE OBSTRUCTION TO TRAFFIC AND INCONVENIENCE TO THE GENERAL PUBLIC AND THE RESIDENTS IN THE VICINITY OF THE WORK AND TO INSURE THE PROTECTION OF PERSONS AND PROPERTY. NO ROAD TO BE CLOSED TO THE PUBLIC EXCEPT WITH THE APPROVAL OF THE ENGINEER AND THE PROPER GOVERNMENTAL AUTHORITY.
7. THE CONTRACTOR SHALL EMPLOY A LAND SURVEYOR, REGISTERED IN THE STATE OF FLORIDA, TO REFERENCE AND RESTORE PROPERTY CORNERS AND LAND MARKERS WHICH MAY BE DISTURBED BY CONSTRUCTION AND TO ASSURE ACCURATE HORIZONTAL AND VERTICAL CONTROLS DURING CONSTRUCTION.
8. IT SHALL BE THE CONTRACTOR'S RESPONSIBILITY AND THE CONTRACTOR'S EXPENSE TO PROVIDE THE CONSULTING ENGINEER WITH "AS-BUILT" DRAWINGS OF CONSTRUCTION. DRAWINGS SHALL CONTAIN SPECIFIC LOCATION OF ALL WATER MAINS, FORCE MAINS AND RECLAIMED WATER MAINS, VALVES AND SERVICE.
9. ADEQUATE EXCAVATION, SHEATING, SHORING AND BRACING SHALL BE PROVIDED AND SHALL CONFORM TO CONSTRUCTION REQUIREMENTS AS SET FORTH BY THE FEDERAL DEPARTMENT OF LABOR, OCCUPATIONAL SAFETY AND HEALTH ADMINISTRATION.
10. THE CONTRACTOR SHALL BE RESPONSIBLE TO MAKE A REVIEW OF THE SITE TO DETERMINE EXISTING CONDITIONS AND ANYTHING NOT SHOWN ON THESE DRAWINGS SHOULD BE BROUGHT TO THE ATTENTION OF THE ENGINEER AND SHALL NOT CONSTITUTE AN EXTRA UNLESS APPROVED BY THE ENGINEER. THE CONTRACTOR SHALL VERIFY THE LOCATIONS, ELEVATIONS AND OTHER FEATURES AFFECTING HIS WORK PRIOR TO CONSTRUCTION.

UTILITY OWNERS:

HOLLY HILL PUBLIC WORKS	386.248.9463
CITY OF HOLLY HILL	386.248.2428
BELLSOUTH	386.295.3080
SPECTRUM	386.760.9941
FPL	386.254.1541
PEOPLES GAS	386.253.5335
VOLUSIA COUNTY	386.257.6000
D.O.T.	386.736.5010
SUNSHINE LOCATES 811 or	800.432.4770

Mead & Hunt
Mead and Hunt, Inc.
4401 Eastport Parkway
Port Orange, FL 32127
phone: 386-761-6810
meadhunt.com
FL Cert. #26730

These documents shall not be used for any purpose or project for which it is not intended. Mead & Hunt shall be indemnified by the client and held harmless and defended from all claims, damages, liabilities, losses, and expenses, including attorneys' fees and costs, arising out of such misuse or reuse of the documents. In addition, unauthorized reproduction of these documents, in part or as a whole, is prohibited.

CITY OF HOLLY HILL LIFT STATION #13 REHABILITATION

DUBS DRIVE/5TH STREET
HOLLY HILL FL

ISSUED

02/08/19	60% DESIGN
03/20/19	90% DESIGN
04/2019	REVISED
05/02/19	BID SET

ISSUED FOR BIDDING

M&H NO.: 1000710-181066.01
DATE: MAY 2019
DESIGNED BY: CN
DRAWN BY: ADC
CHECKED BY: AMG
DO NOT SCALE DRAWINGS

SHEET CONTENTS:
SITE PLAN AND GENERAL NOTES

SHEET NO.
C-201

Attachment: Holly Hill LS. 13 Rehabilitation. Bid Set Plans (2019-R-38 : Lift Station #13 Rehabilitation)

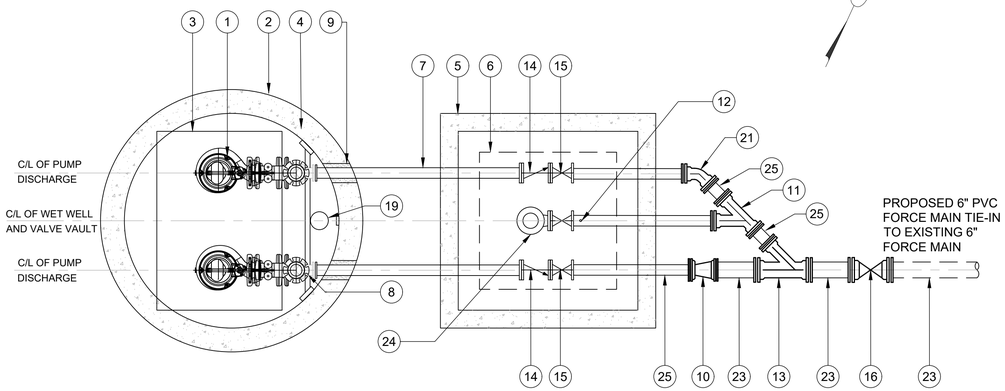

PLAN VIEW
SCALE: 1/2" = 1'-0"

NOTE: USE MEGA-LUG TYPE RESTRAINT AT ALL M.J. FITTINGS

BACKUP FLOAT SETTINGS			
FLOAT	ELEV.	ACTION	NOTES
1	-7.0	ALL PUMPS OFF	ADJUST PER OWNER / MANUFACTURER
2	-5.0	PUMP #1 ON	ADJUST PER OWNER / MANUFACTURER
3	-4.0	PUMP #2 ON	ADJUST PER OWNER / MANUFACTURER
4	-3.5	HIGH LEVEL	ADJUST PER OWNER

LIFT STATION NOTES:

1. VALVE VAULT TO HAVE (2) COATS - 15 MILS TOTAL OF COAL TAR EPOXY INTERIOR COATING. INSTALL 2" SCH80 PVC VAULT DRAIN AS SHOWN. INSTALL 2" DRAIN TRAP INSIDE WETWELL.
2. PROVIDE HASP TYPE LOCKING MECHANISM ON ALL ACCESS HATCHES.
3. PUMPS TO BE FURNISHED WITH HIGH PRESSURE DISCHARGE COUPLING, STAINLESS STEEL SLIDERAIL SYSTEM, SEAL FAILURE, THERMAL OVERLOAD INDICATORS, AND LIFTING CHAIN.
4. ALL DISTURBED AREAS TO BE REGRADED AND SODDED TO MATCH EXISTING.
5. ALL HARDWARE INSIDE WETWELL TO BE 316 STAINLESS STEEL.
6. COAT ALL DIP PIPING, VALVES, FITTINGS IN WET WELL AND VALVE VAULT WITH 15 MILS OF COAL TAR EPOXY.

EQUIPMENT KEY LIST

1. PROPOSED SUBMERSIBLE PUMPS (2) XFP 100C CBI 180GPM @ 17 FT TDH 2.68 HP, 1163 RPM, 1Ø, 60Hz, 230V. PUMP ASSEMBLIES TO INCLUDE (2) 2" 316 S.S. GUIDE BARS, FLOAT HANGERS, AND LIFTING CHAIN. ALL ATTACHMENT HARDWARE TO BE 316 S.S.
2. EXISTING 6.0 FT. I.D. CONCRETE WET WELL. FURNISH AND INSTALL NEW 6.0' DIA. TOP. FURNISH AND INSTALL NEW PRECAST CONCRETE WET WELL TOP WITH ALUMINUM ACCESS HATCHES (SEE ③ BELOW). KEY TOP SLAB TO NEW WET WELL SECTION. CONTRACTOR TO VERIFY DIAMETER BEFORE ORDERING TOP.
3. WET WELL SPRING ASSISTED ACCESS HATCH BILCO OR HALLIDAY PRODUCTS H-20 LOADING. COORDINATE ACCESS HATCH LOCATION WITH PUMP MOUNTING LOCATIONS. MINIMUM CLEAR OPENING 42"x60" TO PROVIDE CLEARANCE ON ALL SIDES OF PUMP FOR REMOVAL. ALL HARDWARE TO BE 316 S.S.
4. FURNISH AND INSTALL "RAVEN" OR "SPECTRASHIELD" EPOXY INTERIOR LINER IN NEW WET WELL. TO BE INSTALLED AFTER ALL PIPE AND HARDWARE AND PRIOR TO BASEPLATE INSTALLATION. (SEE PROJECT SPECIFICATIONS)
5. PRECAST VALVE VAULT. 5'x5' MINIMUM INTERIOR DIMENSION. FIELD INSTALL CONCRETE PIPE SUPPORTS.
6. VALVE VAULT SPRING ASSISTED ACCESS HATCH BILCO OR HALLIDAY PROD. H-20 LOADING 42"x42" MIN. CONTRACTOR TO VERIFY HATCH SIZE IS ADEQUATE. TO PROVIDE UNOBSTRUCTED ACCESS TO ALL VALVES. (SEE NOTE 2)
7. DISCHARGE RISER 4" HDPE DR9 PIPE WITH WELDED FLANGES AND 316 S.S. HARDWARE. (TYP. OF 2)
8. 4" FL HDPE 90° BEND (TYP. OF 2)
9. GROUT SEAL AROUND DISCHARGE LINES WITH H_2S RESISTANT NON-SHRINK GROUT PRIOR TO LINER INSTALLATION (TYP.)
10. 6"X4" M.J. REDUCER, DIP EPOXY LINED
11. 4"X4" MJ WYE, DIP EPOXY LINED (TYP. OF 1)
12. 0-40 PSI GLYCERIN FILLED PRESSURE GAUGE IN DIP PIPE WITH S.S. BALL VALVE
13. 6"X4" M.J. WYE, DIP EPOXY LINED
14. 4" FL. CUSHIONED CHECK VALVE W/ SWING ARM. (TYP. OF 2)
15. 4" AMERICAN BALL VALVE (TYP. OF 3)
16. 6" GATE VALVE, EPOXY LINED WITH VALVE BOX. CONCRETE PAD AROUND VALVE BOX SHALL BE 12"x12"x6". (TYP. OF 1)
17. 4 FLOATS FOR PUMP CONTROL. SEE FLOAT SETTINGS CHART THIS SHEET
18. ANCHOR BASE ELBOW TO WET WELL FLOOR. INSTALL 1/2" 316 STAINLESS STEEL PLATE WITH 3/4" STAINLESS STEEL ALL THREAD TO ANCHOR BASE ELBOWS TO ONE (1) BASE PLATE. BASE PLATE TO BE ANCHORED TO WETWELL WITH MIN. FOUR (4) 3/4" ALL THREAD WITH EPOXY ANCHORS (MIN. 4" EMBEDDED) IN CONCRETE FLOOR.
19. LEVEL TRANSDUCER STILLING WELL 6" PVC WITH 1/2" HOLES AS SHOWN. SUPPORT BRACKETS 316 S.S.
20. 2" SCH80 PVC VALVE VAULT DRAIN WITH TRAP
21. 4" MJ 45° BEND, DIP EPOXY LINED (TYP. OF 1)
22. 6" SCH80 PVC WET WELL VENT WITH 316 S.S. INSECT SCREEN. 6" PIPE SLEEVE TO BE CAST INTO WETWELL TOP. PIPE AND FITTINGS DRY-FIT, NOT GLUED
23. 6" C900 PVC FM
24. 4" CAMLOCK EMERGENCY PUMP CONNECTION WITH DUST CAP PER CITY STANDARDS
25. 4" DIP EPOXY LINED
26. 4" FL DIP 90° BEND EPOXY LINED
27. 316 S.S. LIFTING CHAIN

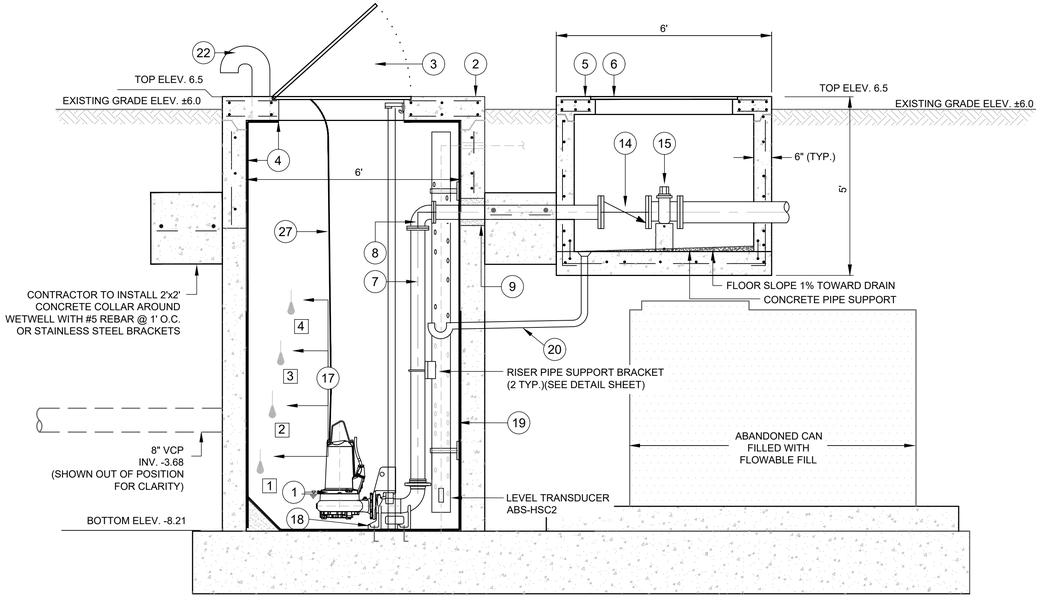

SECTION VIEW
SCALE: 1/2" = 1'-0"

PROPOSED LIFT STATION
OPERATION DATA

EST. DAILY FLOW = 60,000-100,000 GPD (EXISTING)
NO NEW FLOWS ARE PROPOSED
EST. AVG. RUN TIME = 4-6 HOURS PER DAY

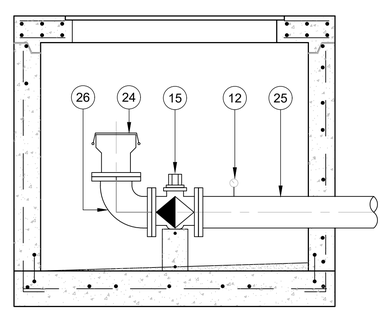

EMERGENCY PUMP CONNECTION DETAIL
NTS

Mead & Hunt
Mead and Hunt, Inc.
4401 Eastport Parkway
Port Orange, FL 32127
phone: 386-761-6810
meadhunt.com
FL Cert. #26730

These documents shall not be used for any purpose or project for which it is not intended. Mead & Hunt shall be indemnified by the client and held harmless and defended from all claims, damages, liabilities, losses, and expenses, including attorneys' fees and costs, arising out of such misuse or reuse of the documents. In addition, unauthorized reproduction of these documents, in part or as a whole, is prohibited.

CITY OF HOLLY HILL
LIFT STATION #13 REHABILITATION

DUBS DRIVE/5TH STREET
HOLLY HILL FL

ISSUED

02/08/19	60% DESIGN
03/20/19	90% DESIGN
04/2019	REVISED
05/02/19	BID SET

ISSUED FOR BIDDING

M&H NO.: 1000710-181066.01
DATE: MAY 2019
DESIGNED BY: CN
DRAWN BY: ADC
CHECKED BY: AMG
DO NOT SCALE DRAWINGS

SHEET CONTENTS
TYPICAL SECTIONS

SHEET NO.
C-301

Attachment: Holly Hill LS 13 Rehabilitation. Bid Set Plans (2019-R-38 : Lift Station #13 Rehabilitation)

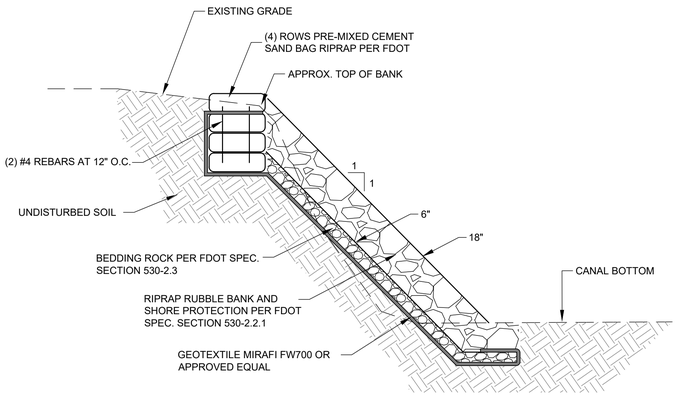

5 RIP RAP BANK PROTECTION
NTS

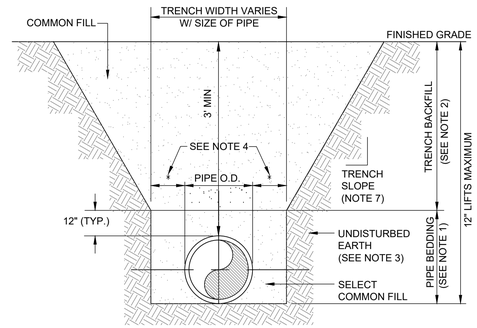

NOTES:

1. PIPE BEDDING: SELECT COMMON FILL COMPACTED TO 95% OF THE MAXIMUM DENSITY AS PER AASHTO T-180.
2. TRENCH BACKFILL: COMMON FILL COMPACTED TO 95% OF THE MAXIMUM DENSITY AS PER AASHTO T-180, (98% DENSITY REQUIRED UNDER DRIVEWAYS, PAVEMENT AND STRUCTURES).
3. PIPE BEDDING UTILIZING SELECT COMMON FILL OR BEDDING ROCK IN ACCORDANCE WITH TYPE "A" BEDDING AND TRENCHING DETAIL MAY BE REQUIRED AS DIRECTED BY THE CITY.
4. (*): 15" MAX. FOR PIPE DIAMETER LESS THAN 24", AND 24" MAX. FOR PIPE DIAMETER 24" AND LARGER.
5. WATER SHALL NOT BE PERMITTED IN THE TRENCH DURING CONSTRUCTION.
6. ALL PIPE TO BE INSTALLED WITH BELL FACING UPSTREAM TO THE DIRECTION OF FLOW.
7. REFER TO OSHA REQUIREMENTS FOR SLOPING, SHEETING AND BRACING IN EXCAVATIONS.
8. FINAL RESTORATION IN IMPROVED AREAS SHALL BE IN COMPLIANCE WITH ALL APPLICABLE REGULATIONS OF GOVERNING AGENCIES. SURFACE RESTORATION WITHIN RIGHT-OF-WAY SHALL COMPLY WITH REQUIREMENTS OF RIGHT-OF-WAY UTILIZATION REGULATIONS AND ROAD CONSTRUCTION SPECIFICATIONS.

3 TYPE "B" BEDDING AND TRENCHING
NTS

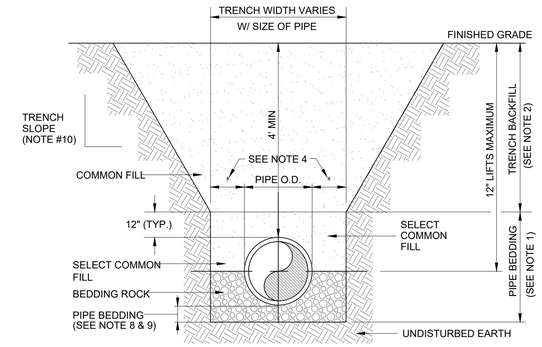

NOTES:

1. PIPE BEDDING: #57 STONE OR BEDDING ROCK COMPACTED TO 95% OF THE MAXIMUM DENSITY AS PER AASHTO T-180.
2. TRENCH BACKFILL: COMMON FILL COMPACTED TO 95 % OF THE MAXIMUM DENSITY AS PER AASHTO T-180. (98% DENSITY REQUIRED UNDER PAVEMENT, DRIVEWAYS AND STRUCTURES.)
3. USE TYPE "A" BEDDING TO BE DETERMINED IN THE FIELD AS DIRECTED BY THE CITY.
4. (*): 15" MAX. FOR PIPE DIAMETER LESS THAN 24", AND 24" MAX. FOR PIPE DIAMETER 24" AND LARGER.
5. WATER SHALL NOT BE PERMITTED IN THE TRENCH DURING CONSTRUCTION.
6. ALL PIPE TO BE INSTALLED WITH BELL FACING UPSTREAM TO THE DIRECTION OF FLOW.
7. REFER TO SECTION 32.5 OF THE MANUAL FOR SHEETING AND BRACING IN EXCAVATIONS.
8. GRAVITY SEWERS SHALL UTILIZE TYPE "A" BEDDING, WHERE UNSUITABLE MATERIAL EXISTS. BEDDING DEPTH SHALL BE 4" MINIMUM FOR PIPE DIAMETER LESS THAN 15", AND 6" MINIMUM FOR PIPE DIAMETER 16" AND LARGER.
9. DEPTH FOR REMOVAL OF UNSUITABLE MATERIAL SHALL GOVERN DEPTH OF BEDDING ROCK BELOW THE PIPE. CITY SHALL DETERMINE IN THE FIELD REQUIRED REMOVAL OF UNSUITABLE MATERIAL TO REACH SUITABLE FOUNDATION.
10. REFER TO OSHA REQMTS. FOR SLOPING, SHEETING AND BRACING IN EXCAVATIONS.

1 TYPE "A" BEDDING AND TRENCHING
NTS

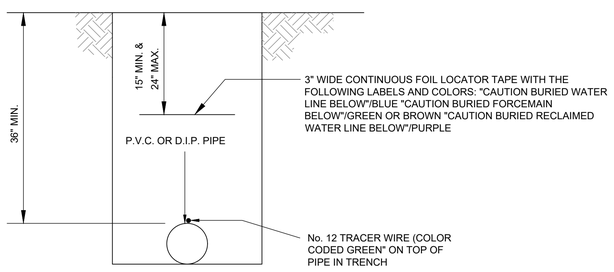

"TERRA TAPE D" or SIMILAR

NOTE:

No. 12 TRACER WIRE TO BE INSTALLED WITH ALL NON-METALLIC PIPE. WIRE SHALL BE BROUGHT UP TO GRADE AT ALL VALVES INSIDE P.V.C. SLEEVE.

4 LOCATOR TAPE / TRACERWIRE INSTALLATION FOR SEWER, WATER AND RECLAIMED WATER PIPELINES
NTS

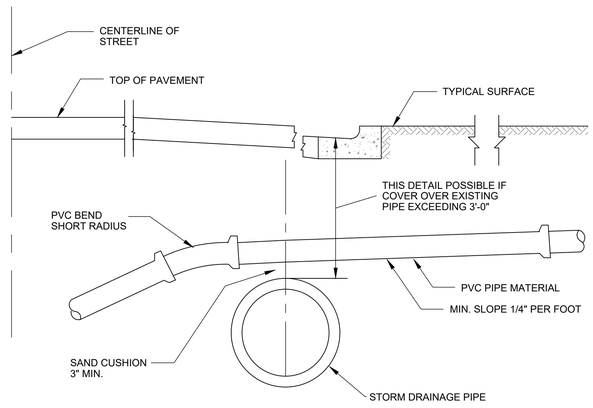

ALTERNATE GRADIENT FOR HOUSE SERVICE SEWERS AT CONFLICTS WITH EXISTING STORM SEWERS & OTHER EXISTING CONDUITS

2 STORM DRAINAGE CROSSING / SANITARY LATER PIPE CROSSING
NTS

Mead & Hunt
Mead and Hunt, Inc.
4401 Eastport Parkway
Port Orange, FL 32127
phone: 386-761-6810
meadhunt.com
FL Cert. #26730

These documents shall not be used for any purpose or project for which it is not intended. Mead & Hunt shall be indemnified by the client and held harmless and defended from all claims, damages, liabilities, losses, and expenses, including attorneys' fees and costs, arising out of such misuse or reuse of the documents. In addition, unauthorized reproduction of these documents, in part or as a whole, is prohibited.

CITY OF HOLLY HILL LIFT STATION #13 REHABILITATION

DUBS DRIVE/5TH STREET
HOLLY HILL FL

ISSUED

02/08/19	60% DESIGN
03/20/19	90% DESIGN
04/2019	REVISED
05/02/19	BID SET

ISSUED FOR BIDDING

M&H NO.: 1000710-181066.01
DATE: MAY 2019
DESIGNED BY: CN
DRAWN BY: ADC
CHECKED BY: AMG
DO NOT SCALE DRAWINGS

SHEET CONTENTS
DETAILS

SHEET NO.
C-501

Attachment: Holly Hill LS_13 Rehabilitation_Bid Set Plans (2019-R-38 : Lift Station #13 Rehabilitation)

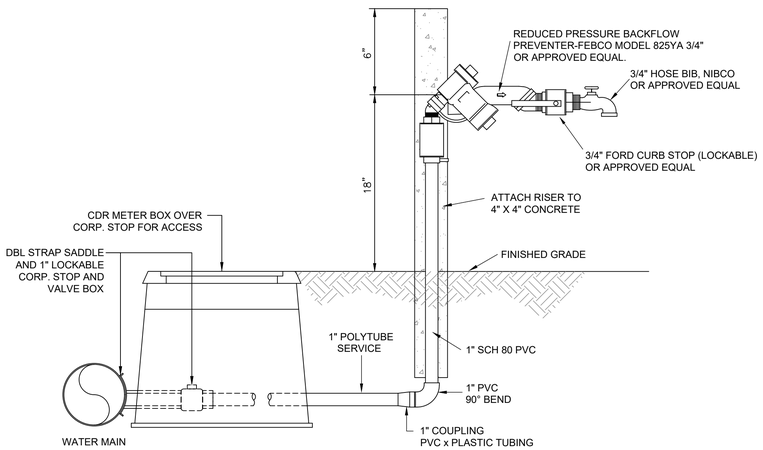

1. ALL BRASS FITTINGS TO BE LEAD FREE NSF 372

11 LIFT STATION WATER SERVICE

NTS

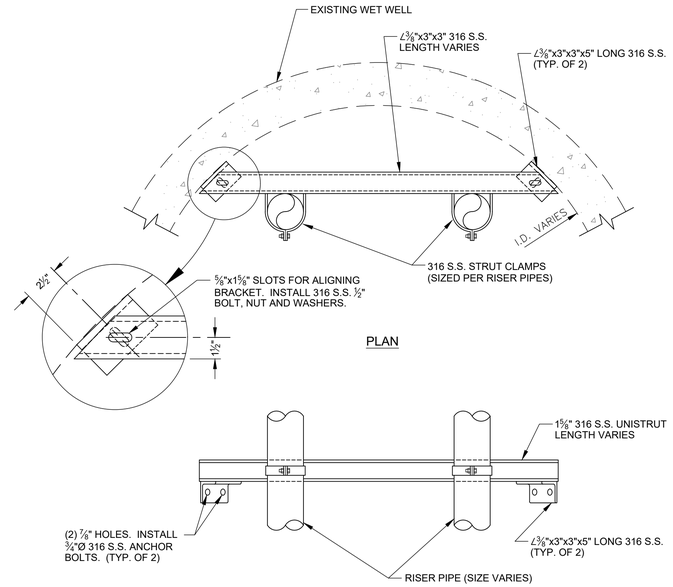

ELEVATION

9 RISER PIPE SUPPORT BRACKET

NTS

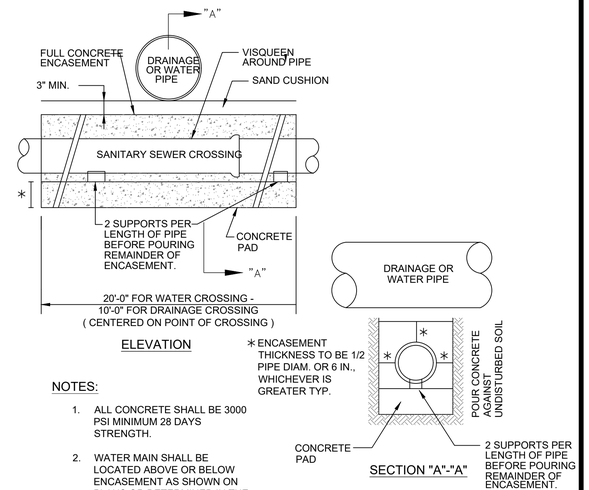

ELEVATION

SECTION "A"-"A"

NOTES:

1. ALL CONCRETE SHALL BE 3000 PSI MINIMUM 28 DAYS STRENGTH.
2. WATER MAIN SHALL BE LOCATED ABOVE OR BELOW ENCASEMENT AS SHOWN ON PLANS OR DETERMINED IN THE FIELD. USE ENCASEMENT WHERE VERTICAL CLEARANCE WATER MAIN AND SEWER MAIN IS LESS THAN 18 INCHES.
3. NO DUCTILE IRON SEWER PIPE IS PERMITTED.

7 SEWER / WATER / DRAINAGE CROSSING

NTS

LOCATION OF PUBLIC WATER SYSTEM MAINS IN ACCORDANCE WITH F.A.C. RULE 62-555.314

Other Pipe	Horizontal Separation	Crossings (1)	Joint Spacing @ Crossings (Full Joint Centered)
Storm Sewer, Stormwater Force Main, Reclaimed Water (2)	Water Main 3 ft. minimum	Water Main 12 inches is the minimum, except for storm sewer, then 6 inches is the minimum and 12 inches is preferred	Alternate 3 ft. minimum Water Main
Vacuum Sanitary Sewer	Water Main 10 ft. preferred 3 ft. minimum	Water Main 12 inches preferred 6 inches minimum	Alternate 3 ft. minimum Water Main
Gravity or Pressure Sanitary Sewer, Sanitary Sewer Force Main, Reclaimed Water (4)	Water Main 10 ft. preferred 6 ft. minimum (3)	Water Main 12 inches is the minimum, except for gravity sewer, then 6 inches is the minimum and 12 inches is preferred	Alternate 6 ft. minimum Water Main
On-Site Sewage Treatment & Disposal System	10 ft. minimum	---	---

(1) Water main should cross above other pipe. When water main must be below other pipe, the minimum separation is 12 inches.
(2) Reclaimed water regulated under Part III of Chapter 62-610, F.A.C.
(3) 3 ft. for gravity sanitary sewer where the bottom of the water main is laid at least 6 inches above the top of the gravity sanitary sewer.
(4) Reclaimed water not regulated under Part III of Chapter 62-610, F.A.C.

Disclaimer – This document is provided for your convenience only. Please refer to F.A.C. Rule 62-555.314 for additional construction requirements.

12 PIPE SEPARATION DIAGRAM

NTS

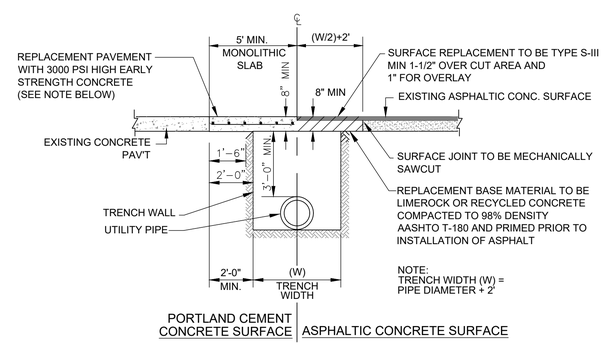

NOTES:

1. PAVING REPLACEMENT SHALL INCLUDE RAISING ALL MANHOLE FRAMES AND LIDS AND VALVE BOXES AND LIDS (AND SIMILAR APPURTENANCES) TO FINAL ELEVATION PRIOR TO RESURFACING.
2. SUBBASE TO BE COMPACTED TO 98% MAXIMUM DENSITY AASHTO T-180.
3. IN AREAS WHERE CONCRETE PAVEMENT IS TO BE UTILIZED, 3000 PSI - 28 DAY STRENGTH CONCRETE PAVEMENT MAY BE PERMITTED PROVIDED THAT THE SUBJECT AREA WILL REMAIN FREE OF VEHICULAR TRAFFIC FOR A MINIMUM OF 3 DAYS.

10 PAVEMENT TRENCH RESTORATION

NTS

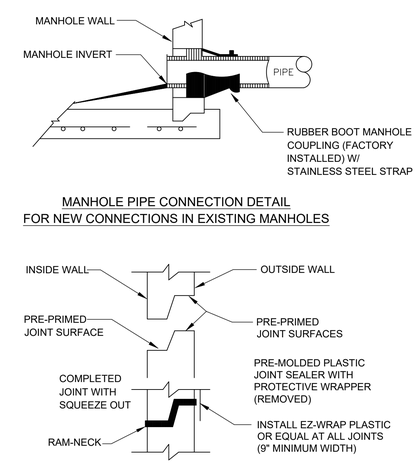

NOTES:

1. ALL NEW CONNECTIONS TO EXISTING SANITARY SEWER MANHOLES SHALL UTILIZE A CORING METHOD AND THE IN-FIELD INSTALLATION OF A RUBBER BOOT INTO THE MANHOLE.

8 RUBBER BOOT AND PRECAST JOINT CONNECTION

NTS

Mead & Hunt
Mead and Hunt, Inc.
4401 Eastport Parkway
Port Orange, FL 32127
phone: 386-761-6810
meadhunt.com
FL Cert. #26730

These documents shall not be used for any purpose or project for which it is not intended. Mead & Hunt shall be indemnified by the client and held harmless and defended from all claims, damages, liabilities, losses, and expenses, including attorneys' fees and costs, arising out of such misuse or reuse of the documents. In addition, unauthorized reproduction of these documents, in part or as a whole, is prohibited.

CITY OF HOLLY HILL LIFT STATION #13 REHABILITATION

DUBS DRIVE/5TH STREET
HOLLY HILL FL

ISSUED

02/08/19	60% DESIGN
03/20/19	90% DESIGN
04/2019	REVISED
05/02/19	BID SET

ISSUED FOR BIDDING

M&H NO.: 1000710-181066.01
DATE: MAY 2019
DESIGNED BY: CN
DRAWN BY: ADC
CHECKED BY: AMG
DO NOT SCALE DRAWINGS

SHEET CONTENTS
DETAILS

SHEET NO.
C-502

Attachment: Holly Hill LS. 13 Rehabilitation, Bid Set Plans (2019-R-38 : Lift Station #13 Rehabilitation)

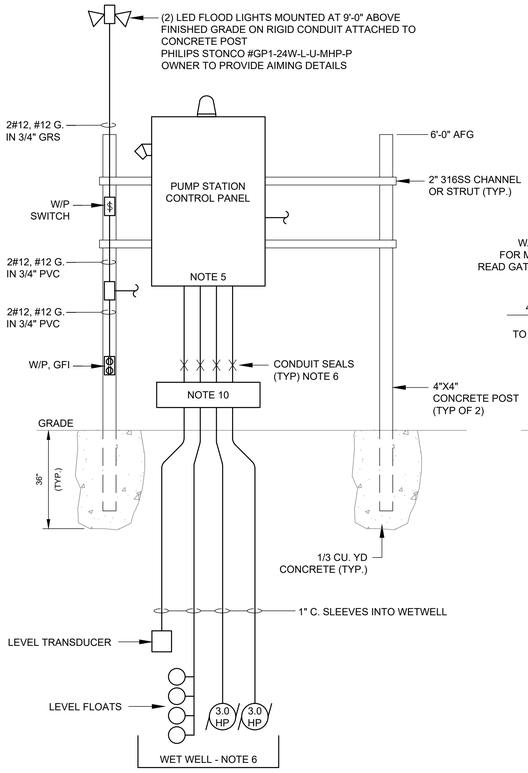

RACK FRONT ELEVATION DIAGRAM

NOT TO SCALE

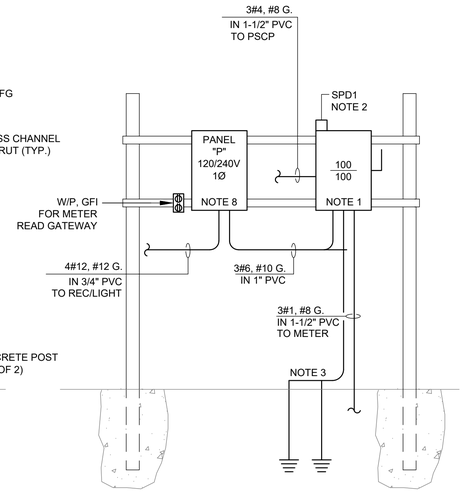

RACK REAR ELEVATION DIAGRAM

NOT TO SCALE

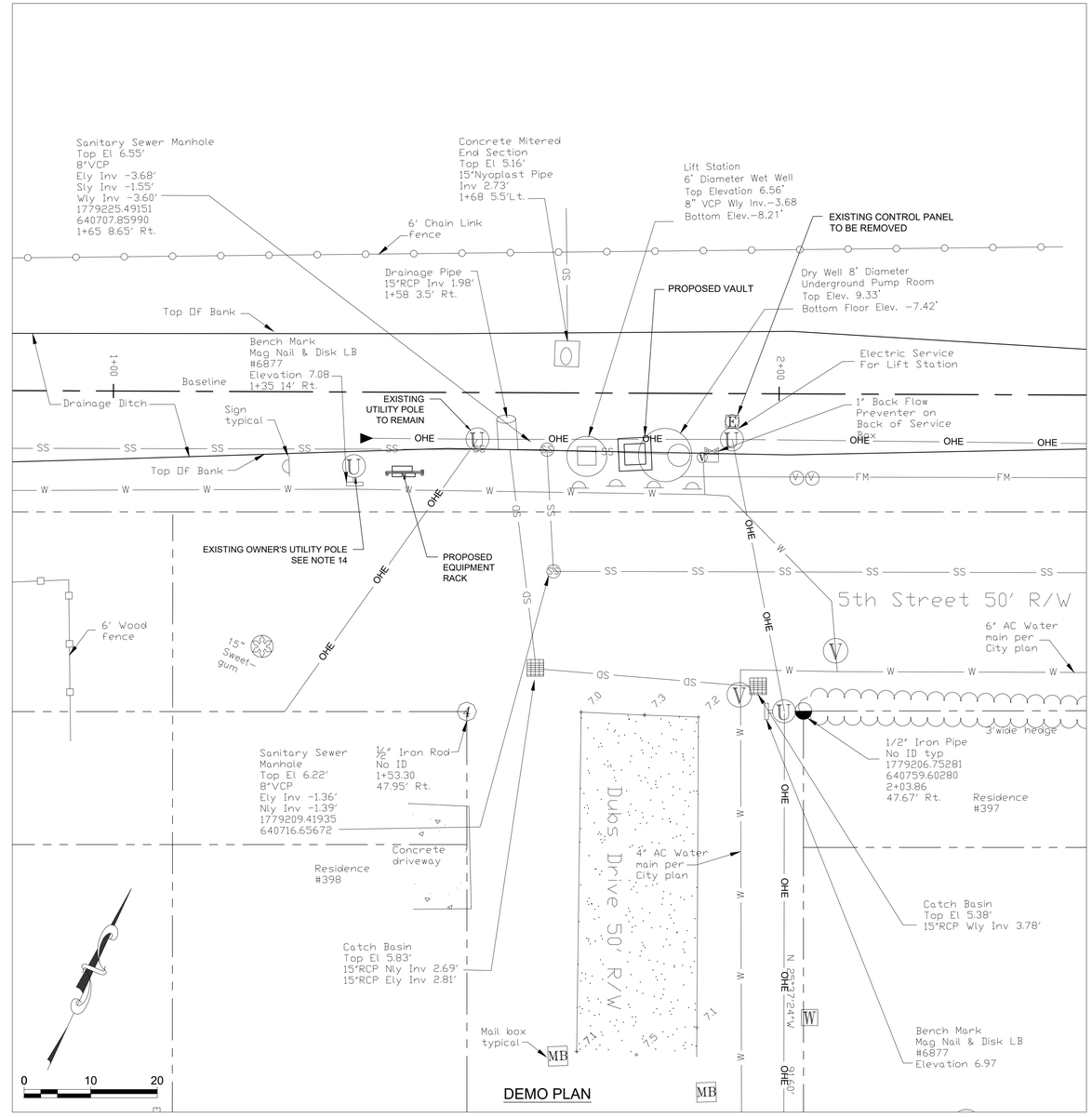

DEMO PLAN

NOTES:

1. 100 AMP, 2-POLE, SOLID NEUTRAL, FUSIBLE, HEAVY DUTY, NEMA 4X DISCONNECT WITH 100 AMP CLASS RK-1 FUSES. LABEL AS "SERVICE DISCONNECT".
2. SURGE ARRESTOR, SQUARE-D #SDSA1175 OR APPROVED EQUIVALENT.
3. SERVICE GROUND TO INCLUDE #6 BARE COPPER RUN TO (2) 3/4" X 10'-0" COPPER ELECTRODES SPACED AT LEAST 10'-0" APART AND BONDED TO WET WELL EQUIPMENT RACK, CONTROL PANELS, TELEMETRY PANELS, WET WELL TOP PLATE AND ALL SECURITY FENCE POSTS. MEASURED RESISTANCE TO GROUND SHALL BE BE 25 OHMS OR LESS. EXOTHERMIC WELD GROUNDING ELECTRODE CONDUCTOR TO RODS.
4. ALL CONDUITS AND FITTINGS SHALL BE SCH80 PVC UNLESS NOTED OTHERWISE.
5. CONTROL PANEL SHALL BE FURNISHED BY PUMP VENDOR. MOUNT ON THE RACK PER DETAIL AND PROVIDE POWER SUPPLY, WIRING, ETC. TO SERVE NEW LIFT STATION EQUIPMENT. CONTROL PANEL WILL INCLUDE VISIBLE AND AUDIBLE ALARM FOR HIGH FLOW CONDITION AND INCLUDE ELAPSED RUN TIME METERS FOR EACH PUMP AND GENERATOR RECEPTACLE.
6. PROVIDE RACEWAYS, SLEEVES AND SEAL-OFF FITTINGS FOR CABLING TO WET WELL FOR FLOAT SWITCHES AND PUMP PROVIDED BY VENDOR. PROVIDE CONDUIT SEALS 12 IN. ABOVE GRADE.
7. LEVEL FLOATS, LEVEL SENSOR AND MOTORS INCLUDING CABLES AND CONNECTIONS TO BE PROVIDED BY PUMP & CONTROL PANEL VENDOR. COORDINATE INSTALLATION AND WIRING ACCORDINGLY. MAKE ALL TERMINATIONS AS REQUIRED BY THAT VENDOR USING APPROVED MATERIALS AND METHODS.
8. INSTALL PANEL "P" INSIDE A 20" x 16" x 8" NEMA 4X 316SS HINGED DOOR BOX WITH A PAD LOCKABLE HANDLE.
9. FROM THE NEW UTILITY METER PROVIDE 3#1, #8G IN 1-1/2" PVC TO THE FPL OVERHEAD SERVICE DROP.
10. MOUNT A 16" x 16" x 6" NEMA 4X 316SS HINGED COVER TERMINAL BOX WITH INSULATED TERMINAL STRIP TO FACILITATE PUMP REMOVALS.
11. SERVICE SHALL BE UNDERGROUND 240V, SINGLE PHASE FROM FPL. COORDINATE SERVICE SOURCE AND CONNECTION WITH FPL.
12. ALL WIRING SHALL BE THWN, COPPER UNLESS OTHERWISE NOTED.
13. CONTRACTOR SHALL COMPLY WITH ALL LOCAL CODES INCLUDING THE CURRENTLY ENFORCED VERSION OF THE NEC.
14. EXISTING WOOD UTILITY POLE WITH EXISTING ANTENNA. PROVIDE NEW ELECTRICAL SERVICE DROP, METER AND RECONNECT ANTENNA TO NEW STATION CONTROL PANEL. DEMOLISH ALL ASSOCIATED ELECTRICAL ASSOCIATED WITH EXISTING LIFT STATION AND PREVIOUS SERVICE. MOUNT NEW METER CAN ON EXISTING POLE. PROTECT AS NECESSARY DURING CONSTRUCTION TO MAINTAIN CONTINUITY OF SERVICE TO EXISTING STREET LIGHT. REFER TO NOTE 9.

PANEL: P

MFG. SQ D VOLTAGE 120/240 PHASE 1 WIRE 3

CAT. QO612L60S AMPS. 100 SYM. A.I.C. 10,000

MOUNT SURFACE MAIN LUG GRD. BUS X

NEMA 1 ENCL MOUNTED IN NEMA 4X ENCLOSURE PER NOTE 7 .

CT	DESCRIPTION	POLE	AMPS	WIRE	COND	Ø A	Ø B
1	RECEPTACLE	1	20	#12	1/2"		
2	FLOOD LIGHTS	1	20	#12	1/2"		
3	RTU ANTENNA	1	20	#12	1/2"		
4	MAIN-BACK FED	2	60	#6	1"		
5	METER READ GATEWAY	1	20	#12	1/2"		

Mead & Hunt

Mead and Hunt, Inc.
4401 Eastport Parkway
Port Orange, FL 32127
phone: 386-761-6810
meadhunt.com
FL Cert. #26730

These documents shall not be used for any purpose or project for which it is not intended. Mead & Hunt shall be indemnified by the client and held harmless and defended from all claims, damages, liabilities, losses, and expenses, including attorneys' fees and costs, arising out of such misuse or reuse of the documents. In addition, unauthorized reproduction of these documents, in part or as a whole, is prohibited.

CITY OF HOLLY HILL LIFT STATION #13 REHABILITATION

DUBS DRIVE/5TH STREET
HOLLY HILL FL

ISSUED

02/08/19	60% DESIGN
03/20/19	90% DESIGN
04/2019	REVISED
05/02/19	BID SET

ISSUED FOR BIDDING

M&H NO.: 1000710-181066.01
DATE: MAY 2019
DESIGNED BY: CN
DRAWN BY: ADC
CHECKED BY: AMG
DO NOT SCALE DRAWINGS

SHEET CONTENTS
ELECTRICAL PLAN AND DETAILS

SHEET NO.
E-001

Attachment: Holly Hill LS_13 Rehabilitation_Bid Set Plans (2019-R-38 : Lift Station #13 Rehabilitation)

PROJECT MANUAL

LIFT STATION #13 REHABILITATION

BID # 19WW05

HOLLY HILL
FLORIDA

Mead & Hunt, Inc.
Project # 1000710-181066.01

Prepared for:

City of Holly Hill

Mead&Hunt
4401 Eastport Parkway
Port Orange, Fl 32127

Phone: 386-761-6810
www.meadhunt.com

April 2019

Attachment: Holly Hill LS_13 Rehabilitation_Bid Set Specifications_04.30.19 (2019-R-38 : Lift Station #13 Rehabilitation)

TABLE OF CONTENTS
CITY OF HOLLY HILL
LIFT STATION #13 REHABILITATION
BID NO. 19WW05

Section	Title
	DIVISION 0 – BIDDING AND CONTRACT REQUIREMENTS
00 02 00	Invitation to Bid
00 10 00	Instruction to Bidders
00 30 00	Proposal
00 31 00	Schedule of Unit Prices
00 32 00	Statement of Bidder's Qualifications
00 33 00	Listing of Subcontractors
00 33 10	Listing of Previous Experience
00 41 00	Bid Bond
00 47 00	Sworn Statement under Section 287.133(3)(a), Florida Statutes, on Public Entity Crimes
00 48 00	Anti-Collusion Statement
00 48 50	Drug Free/Tie Preference Statement
00 49 00	Trench Safety Affidavit
00 50 00	Agreement
00 62 00	Certificate as to Corporate Principal
00 64 00	Payment and Performance Bond and Public Construction Bond
00 65 00	Certificate of Insurance for Public Liability & Property Damage
00 66 00	Affidavit Regarding Workman's Compensation
00 66 50	Certificate of Insurance For Workman's Compensation
00 67 00	Contractor's Statement Under Oath, To Owner
00 68 00	Receipt and Release
00 69 00	Consent of Surety For Final Payment
00 70 00	Standard General Conditions of the Construction Contract
00 70 50	Release of All Claims
00 80 00	Supplementary Conditions
00 80 00A	Contractor's Standard Insurance Requirement and Indemnification Clause
00 84 00	Contractor Request for Information (RAI)
00 84 10	Notice of Award Form
00 84 20	Notice to Proceed Form
00 84 30	Change Order Form
00 84 40	Application and Certificate for Payment Form
00 84 60	Materials Stored on Site Form
00 84 80	Certificate of Substantial Completion
00 84 90	Contractor's Final Release of Lien

Attachment: Holly Hill LS_13 Rehabilitation_Bid Set Specifications_04.30.19 (2019-R-38 : Lift Station #13 Rehabilitation)

DIVISION 1 – GENERAL REQUIREMENTS

01 00 00	Project Requirements
01 02 70	Application for Payment
01 11 00	Summary of Work
01 22 00	Unit Prices
01 29 76	Progress Payment Procedure
01 31 00	Construction Progress Schedules
01 31 19	Project Meetings
01 32 33	Photographic Documentation
01 32 36	Video Monitoring and Documentation
01 33 23	Shop Drawings
01 35 00	Location, Scope, and Special Requirements
01 35 01	Attachments
01 37 00	Schedule of Values
01 42 00	References
01 45 35	Testing and Testing Laboratories
01 57 13	Temporary Erosion and Sedimentation Controls
01 60 00	Material and Equipment
01 71 13	Mobilization
01 74 00	Cleaning and Waste Management
01 74 25	Miscellaneous Work and Cleanup
01 75 16	Start-Up Procedures
01 77 00	Close-Out Procedures
01 78 23	Operating and Maintenance Data
01 78 36	Warranties
01 78 39	Project Record Documents

DIVISION 2
NOT USED

DIVISION 3 – CONCRETE

03 30 00	Cast In-Place and Poured Concrete
03 40 00	Precast Concrete Structures
03 60 00	Grout

DIVISION 4 THROUGH 8
NOT USED

DIVISION 9 – FINISHES

09 91 00	Painting

Attachment: Holly Hill LS_13 Rehabilitation_Bid Set Specifications_04.30.19 (2019-R-38 : Lift Station #13 Rehabilitation)

DIVISION 10 THROUGH 25

DIVISION 26 – ELECTRICAL

26 05 00	Common Work Results for Electrical
26 05 01	Electrical Reference Symbols
26 05 02	Codes, Fees, and Standards
26 05 03	Special Requirements
26 05 04	Demonstration of Completed Electrical Systems
26 05 06	Electrical Connection for Equipment
26 05 13	Wires and Cables
26 05 26	Grounding
26 05 33.13	Conduit for Electrical Systems
26 05 33.16	Boxes for Electrical Systems
26 05 43	Underground Ducts and Raceways for Electrical Systems
26 05 53	Identification for Electrical Systems
26 27 26	Wiring Devices

DIVISION 27 THROUGH DIVISION 30
NOT USED

DIVISION 31 – EARTHWORK

31 22 00	Site Grading
31 23 00	Excavation, Backfill, and Embankment
31 23 19	Dewatering
31 23 33	Trenching, Backfilling, and Compacting

DIVISION 32 – EXTERIOR IMPROVEMENTS
NOT USED

DIVISION 33 – UTILITIES

33 01 30.83	Wetwell Lining System
33 30 00	Sanitary Sewer Systems
33 31 00	Sewer Bypass Pumping
33 32 20	Collection System Submersible Pumps

DIVISION 34 THROUGH DIVISION 45
NOT USED

Attachment: Holly Hill LS_13 Rehabilitation_Bid Set Specifications_04.30.19 (2019-R-38 : Lift Station #13 Rehabilitation)

DIVISION 46 – WATER AND WASTEWATER EQUIPMENT

46 05 04 Process & Utility Piping, Fittings, Valves & Accessories

DIVISION 47 THROUGH DIVISION 49
NOT USED

END OF TABLE OF CONTENTS

Attachment: Holly Hill LS_13 Rehabilitation_Bid Set Specifications_04.30.19 (2019-R-38 : Lift Station #13 Rehabilitation)

SECTION 00 02 00
INVITATION TO BID
CITY OF HOLLY HILL, FLORIDA
LIFT STATION #13 REHABILITATION
BID# 19WW05

Notice is hereby given that the City of Holly Hill, Florida is accepting bids for **LIFT STATION #13 REHABILITATION.** Bids will be accepted by the City of Holly Hill, 1065 Ridgewood Avenue, Holly Hill, Florida 32117, ***until 2:00 p.m. on June 6, 2019,*** at which time and place all proposals received shall be publicly opened and read aloud in the City Hall.

There will be a pre-bid meeting for this project ***at 2:00 p.m. on May 24, 2019.*** The meeting will be held in the Commission Chambers, located in City Hall, 1065 Ridgewood Avenue, Holly Hill, FL 32117.

Description of Work: *The rehabilitation of the City of Holly Hill Lift Station #13 includes the conversion of the can lift station into a submersible station. Work includes bypass pumping, demolition of (2) existing pumps, piping, and valves to abandon pump can. Installation of two (2) new submersible pumps, top slab, piping, valves, valve vault, electrical panel and control panel.*

Copies of the bid documents may be obtained electronically from VendorLink at www.myvendorlink.com. Any addenda to these bid documents will be posted on the VendorLink website. It is the bidder's responsibility to confirm that all addenda have been received prior to submitting a bid for this project. All questions should be directed **in writing** to portorangebids@meadhunt.com. Questions to be submitted no later than 5:00 p.m. on ***May 30, 2019.***

A certified check or bank draft, payable to the City of Holly Hill, Florida, or a satisfactory bid bond executed by the Bidder and an acceptable surety, in an amount equal to five percent (5%) of the bid, shall be submitted with each bid. NO bid shall be withdrawn for a period of ninety (90) days subsequent to the bid opening without the consent of the City of Holly Hill, Florida.

Upon award, the successful bidder will be required to furnish and pay for a satisfactory Contract one hundred percent (100%) Performance Payment Bond which must be recorded by the Clerk of the Court, Volusia County, and enter into a Contract for Services with the City of Holly Hill.

All bidders are required to complete and submit the "Public Entity Crime Sworn Statement", Form #PUR 7068, as designated by Florida Statutes, Section 287.133(3)(a), with their bids.

The City of Holly Hill is not responsible for the U.S. mail or private carriers or messengers in regards to mail being delivered by the specified time so that a bid can be considered.

This is a federally assisted project and is subject to the Fair Labor Standards Act, which include Davis-Bacon (Certified Payroll), 24 CFR 85.36 (bonding requirements), Section 3 & M/WBE and related acts. Laborers and mechanics employed by general contractors and subcontractors performing construction work on this project shall be paid wages at rates not less than the prevailing rates as determined by the Secretary of Labor in accordance with the Davis-Bacon Act. The prime contractor is responsible for the enforcement of wage compliance and support documentation for the duration of the project and may be held liable for wage restitution. The applicable information regarding the laws and regulations stated above are included in the bid packet.

Attachment: Holly Hill LS_13 Rehabilitation_Bid Set Specifications_04.30.19 (2019-R-38 : Lift Station #13 Rehabilitation)

No bids received after the time and date specified for the opening will be considered. The City of Holly Hill, Florida reserves the right to reject any and all bids, to waive any and all non-substantial irregularity in bids reviewed, whenever such rejection or waiver is in the best interest of the City.

Bids shall be addressed to City Clerk, City of Holly Hill, 1065 Ridgewood Avenue, Holly Hill, Florida 32117, in a sealed envelope plainly marked on the outside: **"LIFT STATION #13 REHABILITATION".**

CITY OF HOLLY HILL
VOLUSIA COUNTY, FLORIDA
s/ Joseph A. Forte
City Manager

Attachment: Holly Hill LS_13 Rehabilitation_Bid Set Specifications_04.30.19 (2019-R-38 : Lift Station #13 Rehabilitation)

SECTION 00 10 00

INSTRUCTIONS TO BIDDERS

PART 1 - GENERAL

1.01 PROJECT DESCRIPTION

A. The work of this project consists of furnishing all labor, materials, equipment, tools, transportation, services, and incidentals and performing all work necessary to construct

LIFT STATION #13 REHABILITATION
BID NO. 19WW05

All above referenced work shall be complete, in place, and ready for service in accordance with the drawings and specifications prepared therefore by Mead & Hunt and entitled, **"LIFT STATION #13 REHABILITATION"**

B. The location of the project is the City of Holly Hill, Florida.

1.02 DEFINED TERMS

Terms used in the Instructions to Bidders are defined and have the meanings assigned to them in the General Conditions.

1.03 COPIES OF BIDDING DOCUMENTS

A. Only complete sets of Bidding Documents will be issued and shall be used in preparing bids. Neither the OWNER nor the ENGINEER assumes any responsibility for errors or misinterpretations resulting from the use of incomplete sets.

B. Complete sets of Bidding Documents may be obtained in the manner and at the location stated in the Invitation to Bid.

1.04 RECEIPT OF BIDS

The Place to which proposal must be delivered, the amount of Proposal Security required and the date, time and place of opening of proposals, are stated in the Invitation to Bid. The Proposal form amplifies the Advertisement in indicating the location and description of the project to be constructed and shows the approximate quantities of work to be performed and materials to be furnished, if a unit price contract, any special requirements which may vary from or are not contained in the specifications. The bid documents as listed in Paragraph 1.08, Preparation of Proposal, shall be submitted as described in Section 00 30 00-3 under Supplemental Requirements.

Attachment: Holly Hill LS_13 Rehabilitation_Bid Set Specifications_04.30.19 (2019-R-38 : Lift Station #13 Rehabilitation)

1.05 BIDDER'S QUALIFICATIONS

The Bidder will be required to show that he/she is capable of performing the work contemplated and shall furnish, if requested, in duplicate the following:

a. A sworn statement showing the equipment definitely controlled by the Bidder and available to him for performing the work;

b. A sworn statement of his/her experience in performing work of the character for which his bid is submitted; and,

c. A sworn statement showing his current assets and liabilities as of a date not more than ninety (90) days prior to the date of submission.

If the Owner approves the above required statements and the Proposal is accompanied by the specified security, the person, firm or corporation submitting such Proposal shall be considered as a qualified Bidder.

1.06 BIDDER'S RESPONSIBILITY

This is a federally assisted project and is subject to the Fair Labor Standards Act, which include Davis-Bacon (Certified Payroll), 24 CFR 85.36 (bonding requirements), Section 3 & M/WBE and related acts. Laborers and mechanics employed by general contractors and subcontractors performing construction work on this project shall be paid wages at rates not less than the prevailing rates as determined by the Secretary of Labor in accordance with the Davis-Bacon Act. The prime contractor is responsible for the enforcement of wage compliance and support documentation for the duration of the project and may be held liable for wage restitution. The applicable information regarding the laws and regulations stated above are included in the bid packet.

The Bidder is required to carefully examine the site of the project, the Proposal Form, Drawings, Specifications, Agreement Form, and all other forms pertinent to the work contemplated. It will be assumed that he has satisfied himself as to the conditions to be encountered, the character, quality, and quantities of work to be performed and materials to be furnished, and the requirements of the Contract and specifications. No allowance or concession will be made for lack of such information on the part of the Contractor.

Whenever such information concerning subsurface materials or conditions is given on the drawings, it is understood, in the absence of any qualifying notation, that it was obtained in the usual manner and the location, depths, and character of the material have been recorded in good faith. There is no expressed or implied agreement that the depths or the character of the material have been correctly indicated and Bidders should take into account the possibility that conditions affecting the cost or quantities of work to be done may differ from those indicated.

Attachment: Holly Hill LS_13 Rehabilitation_Bid Set Specifications_04.30.19 (2019-R-38 : Lift Station #13 Rehabilitation)

1.07 APPROXIMATE ESTIMATE OF QUANTITIES

The Bidder's attention is directed to the fact that in contracts based on unit prices the estimate of quantities of work to be done and materials to be furnished under these specifications, as shown on the Proposal Form, and in the Contract, is approximate and is given only as a basis of calculation upon which to determine the lowest Bidder. The Owner does not assume any responsibility that the quantities shall obtain strictly in the construction of the Project, nor shall the Contractor plead misunderstanding or deception because of such estimate of quantities, or of the character of the work or location, or other conditions pertaining thereto. The Owner reserves the right to increase or diminish any or all of the above mentioned quantities of work or to omit any of them, as it may deem necessary, and such increase or decrease of the quantities given for any of the items shall not be considered as sufficient grounds for granting an increase in the unit prices bid, except as set forth in the General Conditions.

1.08 PREPARATION OF PROPOSAL

In preparing Proposals in the manner prescribed under Paragraph 1.14, the Proposal Form, the Bid Form (when a Bid Bond is permitted as proposal security), Certificate as to Corporate Principal, Public Entity Crimes Statement, Anti-Collusion Statement, and Drug Free/Tie Preference Statement, must be properly executed in ink .

Upon the prescribed Schedule of Unit Prices, all bid prices shall be written in ink, in both words and numerals, in the blank spaces for each item, with the amounts extended if a unit price bid and all amounts totaled. In the event of any discrepancy between the written amounts and the numerals, the written amounts shall govern and will be considered as the price bid. The sum of the Total Bid as calculated from the individual items in Section 00 31 00, Schedule of Unit Prices, shall equal the Total Price as listed in Section 00 30 00, Proposal.

Except as provided below, bids containing substitutions or combinations of alternates will not be considered unless such substitutions or combinations are specifically authorized by the Proposal.

In unit price bids, the extensions, if any, and the total are for informational purposes only, and the determination of the lowest bid will be based solely on the total results of computations of the estimated quantities and the prices bid. The Bidder shall submit a completed Schedule of Unit Prices, Section 00 31 00 with each bid. The bid may be considered non-responsive without this form.

The Bidder shall sign his/her name and give his/her business address in the spaces provided therefore. If the Proposal is made as a partnership, it shall be signed by all partners; if made by a corporation, it shall be signed in the name of the corporation by one of the officers thereof and shall have affixed the seal of the corporation.

1.09 PROPOSAL SECURITY

Each Proposal shall be accompanied by a security in the form of a certified check or, when specifically permitted, a Bid Bond, payable to the Owner, in the amount indicated in the Invitation

Attachment: Holly Hill LS_13 Rehabilitation_Bid Set Specifications_04.30.19 (2019-R-38 : Lift Station #13 Rehabilitation)

to Bid and, in either case, with properly executed Agreement of Surety. Such proposal security of the successful Bidder shall be forfeited to the Owner as liquidated damages if the successful Bidder fails to execute and deliver the Contract in conformity with the Form of Agreement, and furnish bonds and insurance certificates as specified within ten (10) days after notification by the Owner of the acceptance of his bid, *excluding Bond review by the City Attorney*. Within three (3) days after formal opening of bids, if requested by the Contractor, the securities therefore will be returned excepting those which the Owner elects to hold until the award is made and the successful Bidder qualified and executes the Contract. Thereafter, Proposal Securities, other than that of the qualified low Bidder, will be returned at once. The security of the successful Bidder will be returned to him when the Contract is executed by both parties hereto and the Performance and Payment Bonds have been recorded. If all Proposals are rejected, the securities therefore will be returned immediately after the determination of such rejection.

1.10 WITHDRAWAL OF PROPOSALS

All Bidders specifically waive any right to withdraw a Proposal after it has been submitted to the Owner, except as hereinafter provided. A Bidder may withdraw a Proposal provided the Bidder makes a request to do so by telephone, telegraph, or in writing to the Owner, and provided that such requests reach the office of the Owner not later than the day previous to the date set for opening thereof. Requests by telephone or telegraph must be confirmed in writing, by the Bidder in person, or by an accredited representative of the Bidder before the time set for the opening of the Proposals. No bids may be withdrawn for a period of NINETY (90) DAYS after the date and time designated for the opening thereof.

1.11 RIGHT TO REJECT PROPOSALS

The unqualified right is reserved by the Owner to waive any informalities in, or reject any or all Proposals as may be deemed to the best interest of the Owner. Proposals which contain any omissions, erasures, alterations, additions not called for, conditional bids, or irregularities of any kind, or Proposals otherwise regular which are not accompanied by Proposal Security, may be rejected as informal. Proposals in which the bid prices are obviously unbalanced may be rejected.

1.12 CHANGES PRIOR TO THE OPENING OF BIDS

During the period allowed for preparation of bids, the Bidders may be furnished addenda or bulletins for additions to or alterations of the Drawings or Specifications, which shall be included in the work covered by the Proposal and become a part of the Contract Documents, Bidders may submit to the Engineer a written request for an interpretation thereof. The Bidder submitting the request will be responsible for its prompt delivery. Any interpretation of the Contract Documents will be made only by addendum duly issued and a copy of such addendum will be mailed or delivered to each prospective Bidder of Record. The Owner will not be responsible for any other explanations or interpretations of the proposed Contract Documents.

Attachment: Holly Hill LS_13 Rehabilitation_Bid Set Specifications_04.30.19 (2019-R-38 : Lift Station #13 Rehabilitation)

1.13 SCOPE OF WORK

Unless otherwise provided in the Construction Specifications or the Proposal, it is the intent of the Contract Documents to prescribe a complete project which the Bidder proposes to construct, by furnishing all labor, materials, equipment, tools, necessary utilities and other facilities, and performing all work necessary to incidental to such construction, in full compliance with the Drawings, Specifications, Proposal, and Contract, and any special requirements contained therein or supplements attached thereto.

Should any construction or condition be anticipated which is not covered by these Specifications, the special requirements thereof will be stated in the Proposal, and any such special requirements shall be considered a part of these specifications as though they were fully contained herein. If any special requirements stated in the Proposal conflicts with any of the provisions of these Specifications, the former shall govern.

1.14 SUBMITTING PROPOSAL

Two (2) copies of the Proposal, accompanied by the Proposal Security, and all addenda, if any, and all other required supporting documentation shall be submitted in an opaque, sealed envelope, addressed to the Owner. The name of the Bidder shall appear in the upper left-hand corner of the envelope and the following notation shall appear in the lower left-hand corner.

LIFT STATION #3 REHABILITATION

1.15 AWARD AND EXECUTION OF CONTRACT

When a Proposal received has been determined to be satisfactory, a Contract will be awarded to the lowest responsible Bidder within the time designated in the Contract Documents.

The Bidder to whom the award is made shall execute the Contract and return it, together with the properly executed bonds and insurance certificates, to the office of the Owner, within the time specified in Paragraph 1.09 of Section 00 10 00.

If the Contractor executes his Contract as herein provided and the Contract is not executed by the Owner within thirty (30) days after the receipt thereof from the Contractor, the Owner upon written request of the Contractor will return the Proposal Security. In such event, the award of the Contract shall be considered as annulled.

The Contract, Surety Bonds, and insurance certificates shall be executed in quintuplicate, or in as many copies as the Owner may require.

1.16 CANCELLATION OF AWARD

The Owner reserves the right to cancel the award of any contract at any time prior to its execution by the Owner.

Attachment: Holly Hill LS_13 Rehabilitation_Bid Set Specifications_04.30.19 (2019-R-38 : Lift Station #13 Rehabilitation)

1.17 SURETY BONDS

With the execution and delivery of the Contract, the successful bidder receiving the Contract award will be required to furnish within the time specified in Paragraph 1.09 of Section 00 10 00, a Payment and Performance Bond, covering faithful and satisfactory performance of the work contracted, in an amount not less than one hundred percent (100%) of the total contract price, and a Public Construction Bond in an amount not less than one hundred percent (100%) of the Contract amount, covering payment in full for all services rendered, materials furnished and labor supplied or performed. The same Surety must execute both bonds each of which shall be in the form provided in the Contract Documents.

Should any Surety upon any Bond furnished in connection with this Contract become unacceptable or be deemed unsatisfactory to the Owner at any time, the Contractor shall upon written notice from the Owner, promptly furnish acceptable or substitute security as may be required to protect the interests of the Owners or of persons supplying services, labor and materials in the prosecution of the work under Contract. No further payment shall be deemed due or shall be made under this Contract, until the new Surety or Sureties will qualify and be accepted by the Owner.

1.18 INDEMNITY AND INSURANCE

The Contractor shall not commence work under this Contract until he has obtained all insurance required under by these Specifications and such insurance has been approved by the Owner, nor shall the Contractor allow any subcontractor to commence work on a subcontract until all similar insurance required of the subcontractor has been so obtained and approved by the Contractor.

A. Certificates. The Contractor shall submit certificates or other documentary evidences to the Owner for approval, covering Workmen's Compensation Insurance; and Public Liability and Property Damage Insurance as well as any other insurance required by the Contract Documents.

   Each certificate or other documentary evidence presented shall contain therein or have contained in a rider attached thereto and made a part thereof, a clause to the effect that the insurer will notify the insured and the Owner in writing thirty (30) days prior to the cancellation of the policy. The certificate for each policy shall be executed in quintuplicate, or in as many copies as the Owner may require.

B. Accidents and Claims. The Contractor shall be held responsible for all accidents and shall indemnify to the extent permitted by law and protect the Owner from all suits, claims and actions brought against it, and all cost or liability, including attorneys fees, to which the Owner may be put for any injury or alleged injury to the person or property of another resulting from negligence or carelessness in the performance of the work, or from any improper or inferior workmanship, or from inferior materials used in the work.

C. Mutual Responsibility of Contractors. Should a Contractor in the performance of his/her Contract cause damage to any person, any property, or work of another Owner or other party to the damage, arrange for an amicable settlement thereon. It is agreed by all parties

Attachment: Holly Hill LS_13 Rehabilitation_Bid Set Specifications_04.30.19 (2019-R-38 : Lift Station #13 Rehabilitation)

herein that such disputes shall not delay completion of the work, nor be cause for claim against the Owner. Work shall be continued by the party claiming damages at his expense, subject to such damages as may be obtained by due course of law.

D. Contractor's Liability. The status of the Contractor in the work to be performed by him/her under this Contract is that of an independent Contractor and that, as such, he shall properly safeguard against any and all injury or damage to the public, to public and private property, materials and things; and that, as such, he/she alone shall be responsible for any and all damage, loss or injury to persons or property that may arise, or be incurred, in or during the conduct or progress of said work without regard to whether or not the Contractor, his/her subcontractors, agents, or employees have been negligent; and that the Contractor shall keep the Owner free, and discharge of, and from any and all responsibility for risks or casualties of every description, for any or all damage, loss or injury to persons or property arising out of the nature of the work, from the action of the elements, or from any unforeseen or unusual difficulty, the Contractor shall assume and be liable for all blame and loss of whatsoever nature by reason of neglect or violation of any federal, state, county, or local laws, regulations or ordinances; that Contractor shall indemnify and save harmless the Owner and all its officers, agents and employees from all suits or actions at law caused by the negligence, recklessness or intentional wrongful misconduct of the Contractor and persons employed or utilized by the Contractor in the performance of the construction contract and shall, if required by the Owner, produce evidence of settlement of any such action before final payment shall be made by the Owner.

1.19 CANCELLATION OF CONTRACT

As soon as practicable after the satisfactory execution of the Contract by both parties, written notice to proceed with the work will be given to the Contractor. If such notice is not given within thirty (30) days after contract execution, and the delay is not caused by the Contractor or accepted by him/her in writing, the Contract may be declared null and void by either party.

If the Contractor incurs any expense in furtherance of the Contract prior to receipt of the Notice to Proceed, he/she does so on his own responsibility.

1.20 COMPLETION TIME AND LIQUIDATED DAMAGES

The Bidder shall understand that the time limit indicated for completion of this Contract, and the amount of liquidated damages to be charged against the Contractor shall be declared in default in accordance with the provisions of the Specifications, shall be as stated in Article II of the Form of Agreement which is a part of these Contract Documents.

1.21 PAYMENT OF TAXES

The Contractor will be responsible for payment of all Excise, Sales and Use Taxes, and all other taxes required by law on all materials, tools, apparatus, equipment, fixtures, and incidentals which he purchases or uses for the purpose of fulfilling the work of this Contract, and he/she shall include all amounts required for such taxes with the item prices bid in his Proposal. No additional payment

Attachment: Holly Hill LS_13 Rehabilitation_Bid Set Specifications_04.30.19 (2019-R-38 : Lift Station #13 Rehabilitation)

will be made to cover such taxes. Each Bidder shall thoroughly familiarize himself before submitting a Proposal, with all laws requiring the payment of taxes.

1.22 PUBLIC ENTITY CRIMES INFORMATION STATEMENT

A person or affiliate who has been place on the convicted vendor list following a conviction for a public entity crime may not submit a bid on a contract to provide any goods or services to a public entity, may not submit a bid on a contract with a public entity for the construction or repair of a public building or public work, may not submit bids on leases of real property to a public entity, may not be awarded or perform work as a contractor, supplier, subcontractor, or consultant under a contract with any public entity, and may not transact business with any public entity in excess of the threshold amount, provided in Section 287.017, for CATEGORY TWO for a period of 36 months from the date of being placed on the convicted vendor list.

END OF SECTION

Attachment: Holly Hill LS_13 Rehabilitation_Bid Set Specifications_04.30.19 (2019-R-38 : Lift Station #13 Rehabilitation)

SECTION 00 30 00
PROPOSAL

FOR

CITY OF HOLLY HILL
LIFT STATION #13 REHABILITATION
BID NO. 19WW05
(To be completed in Duplicate)

Bidder's Name:_____

Submitted: _____, 20

City of Holly Hill
City Clerk
1065 Ridgewood Avenue
Holly Hill, FL 32117

Gentlemen:

The undersigned, as Bidder, hereby declares that the only person or persons interested in the Proposal, as principal or principals, is or are named herein and that no other persons than herein mentioned has any interest in the Proposal or the Contract to which the work pertains; that this Proposal is made without connection or arrangement with any other person, company, or parties making a bid or proposal and that the Proposal is in all respects fair and made in good faith without collusion or fraud.

The Bidder further declares that he has examined the site of the work and that from personal knowledge and experience, or that he/she has made sufficient test holes and/or other subsurface investigations to fully satisfy self that such site is a correct and suitable one for this work and he/she assumes full responsibility therefore; that he/she is familiar with all legal requirements (Federal, State and local laws, ordinances, rules and regulations) pertaining to the Work; that he/she has examined the Drawings and Specifications for the work and from his/her own experience or from professional advice that the Drawings and Specifications are sufficient for the work to be done and he/she has examined the other Contract Documents and all addenda relating thereto, and that he/she has satisfied himself/herself fully, relative to all matters and conditions with respect to the work to which this Proposal pertains.

The Bidder proposes and agrees, if this Proposal is accepted, to contract with the City of Holly Hill , (Owner) in the form of contract specified, to furnish all necessary materials, equipment, machinery, tools, apparatus, transportation, and labor and to perform all work necessary to complete the Work specified in the Proposal and other Contract Documents.

The Bidder further proposes and agrees to comply in all respects with the time limits for commencement and completion of the Work as stated in the Contract Form.

Attachment: Holly Hill LS_13 Rehabilitation_Bid Set Specifications_04.30.19 (2019-R-38 : Lift Station #13 Rehabilitation)

The Bidder further agrees that the deductions for liquidated damages, as stated in the Contract Form, constitute fixed and agreed liquidated damages to reimburse the Owner for additional costs to the Owner resulting from the Work not being completed within the time limit stated in the Contract Form.

The Bidder further agrees to execute a Contract and furnish satisfactory Performance and Payment Bonds, each in the amount of one-hundred percent of the Contract price, and the required Certificates of Insurance, within ten consecutive calendar days after written notice being given by the Owner of the award of the Contract, and the undersigned agrees that in case of failure on his/her part to execute the said Contract, Performance and Payment Bonds and Insurance Certificates within ten (10) consecutive calendar days after the award of the Contract, the bid guarantee accompanying his/her bid and the money payable thereon shall be paid to the Owner as liquidation of damages sustained by the Owner; otherwise, the bid guarantee shall be returned to the undersigned within fifteen days after the Contract is signed and the Performance and Payment Bonds and Insurance Certificates are filed.

The undersigned agrees to accept as full compensation for completion of the project in full compliance with the Contract Documents, the unit prices for the items named in Section 00 31 00, Schedule of Unit Prices, submitted herein with this Proposal.

The undersigned offers to furnish all materials, equipment and labor for construction of **"LIFT STATION #13 REHABILITATION",** for the City of Holly Hill, Florida, complete in every respect in strict accordance with the drawings, specifications and any future changes therein. The Contractor shall perform these obligations for the prices listed in the "Schedule of Unit Prices: Section 00 31 00" attached and made a part of this Bid. **The bid total is:**

_____

(In Words)

Dollars $_____(In Figures)

COMPLETION TIME OF CONTRACT

The Contractor agrees that the work shall be started not later than the date indicated in the Notice to Proceed and that the total work shall be substantially completed within **150 days** and final completion within **30 days** of substantial completion**.**

The Contractor further agrees that for each calendar day, with the exception of Sundays and legal holidays that any work shall remain uncompleted after the stations completion times stipulated above the sum of **$1,000 (One Thousand Dollars)** per day shall be deducted from monies due the contractor, not as a penalty, but as liquidated damages. If the Contractor is declared in default in accordance with the provisions of the Specifications, liquidated damages shall be charged as provided herein, and such amounts shall be deducted from the final amount payable to the Contractor or his/her Surety. Should the total amount chargeable as liquidated damages exceed

Attachment: Holly Hill LS_13 Rehabilitation_Bid Set Specifications_04.30.19 (2019-R-38 : Lift Station #13 Rehabilitation)

the amount due or payable to the Contractor or his/her Surety, then such excess shall be paid to the Owner by the Contractor or his/her Surety.

SUPPLEMENTAL REQUIREMENTS

The following documents are attached to and made a condition of this bid:

Schedule of Unit Prices: Section 00 31 00
Statement of Bidder's Qualifications: 00 32 00
Listing of Subcontractors: Section 00 33 00
Listing of Previous Experience: Section 00 33 10
Bid Bond: Section 00 41 00
Public Entity Crimes Statement: Section 00 47 00
Anti-Collusion Statement: Section 00 48 00
Drug Free/Tie Preference Statement: Section 00 48 50
Trench Safety Affidavit: Section 00 49 00
Certificate as to Corporate Principal: Section 00 62 00
City of Holly Hill Insurance Requirements: Section 00 80 00A
W9 Request for Taxpayer Identification Number and Certification

REQUIRED DISCLOSURE

At its sole discretion, the City of Holly Hill, Florida may reject any bidder the City finds to lack, or whose present or former executive employees, officers, directors, stockholders, partners or owners are found by the City to lack honesty, integrity, or moral responsibility. The discretion of the City may be exercised based on the City's own investigation, public records, or any other reliable sources of information. By submitting a bid, bidder recognizes and accepts that the City may reject the bid based upon the exercise of its sole discretion and bidder waives any claim it might have for damages or other relief resulting from the rejection of its bid based on these grounds.

SCHEDULE OF MAJOR MANUFACTURERS AND SUPPLIERS

The equipment manufacturers/suppliers on this project shall be as delineated in the following schedule. Bidders should note that the Owner and Engineer have made rigorous investigations of equipment performance and features, and as a result, Bidders are to note that the contract price for this project shall be based on Base Bid equipment. The Base Bid equipment for this project falls under one of two categories. The first category is equipment that the Owner and Engineer have determined will be supplied by a sole source of supply, <u>for which no substitutions or alternates will be entertained or allowed.</u> Bidder is advised that offering of any alternatives to the sole source supplied equipment will be grounds for rejection of his bid as not responsive. The second category of equipment includes those items where the Owner and Engineer deem there to be more than one acceptable supplier of the particular item listed. The equipment which falls under these two categories is a shown on the subsequent pages of this Schedule of Major Manufacturers and Suppliers. Bidder is advised that the award of this Contract will be based solely on the use of Base Bid equipment.

Attachment: Holly Hill LS_13 Rehabilitation_Bid Set Specifications_04.30.19 (2019-R-38 : Lift Station #13 Rehabilitation)

The following comments relate only to the second category of equipment, where the Contract Documents are based upon the equipment or products available from the suppliers denoted as A, B, C, etc. below. These equipment manufacturers, along with the sole source suppliers constitute the Base Bid.

Provision is made in the Contract Documents for alternate manufacturers and suppliers whose equipment or product may be deemed equivalent in quality (see General Conditions). However, the Bidder must indicate in his Bid which Base Bid supplier he intends to use for each item of equipment listed by circling one of the listed manufacturers/suppliers. If the Bidder fails to indicate which listed manufacturer/supplier he intends to use if an alternate is rejected, he must use the supplier listed as "A". Also, if the Bidder circles more than one listed supplier, he must use the first supplier circled (unless an alternate is approved).

If the Bidder desires to propose one or more alternate manufacturers/suppliers, he may write in the name of such alternates in the spaces provided on the Alternate Manufactures/Suppliers page following the schedule. He must, nevertheless, also circle one of the listed manufacturers/suppliers because Bidders' Bid price must be based upon this Base Bid list. Wherever an alternate supplier is proposed, the Bidder must insert the amount to be deducted from the Contract Price (either lump sum or unit price) if the alternate supplier is eventually approved. If the proposed alternate supplier is determined "not equivalent" by the Engineer, the Bidder must use the circled supplier.

For any alternate supplier accepted by the Owner, the Contract Price will be reduced by the deductive amount stated in the Bid. However, the Contract Price will not be adjusted for any alternate supplier rejected.

Each proposed alternate will be evaluated in accordance with the General Conditions.

The deductive amount specified for alternate manufacturers/suppliers will not be used in determining the successful Bidder. Alternates will be considered only after award of the contract.

The Contractor shall reimburse the Owner for any costs directly attributable to the change in suppliers, such as additional field trips for the Engineer, additional redesign costs, additional review and inspection costs, etc.

The Owner may request and the Bidder shall supply complete information on proposed alternates prior to the Notice of Award.

Attachment: Holly Hill LS_13 Rehabilitation_Bid Set Specifications_04.30.19 (2019-R-38 : Lift Station #13 Rehabilitation)

SCHEDULE OF MAJOR MANUFACTURERS
AND SUPPLIERS

Category I - Sole Source Equipment Items:

Item No.	Spec. No.	Equipment/Material	Manufacturer or Supplier
1	333220	Collection System Submersible Pumps	A) ABS

Category II - Major Equipment Items:

NONE

Attachment: Holly Hill LS_13 Rehabilitation_Bid Set Specifications_04.30.19 (2019-R-38 : Lift Station #13 Rehabilitation)

ALTERNATE MANUFACTURERS/SUPPLIERS

EQUIPMENT ITEM MATERIAL	SPEC. SECTION	ALTERNATIVE MANUFACTURER / SUPPLIER (LIST ONE ONLY)	DEDUCTIBLE AMOUNT (indicate whether lump sum or unit price) ALTERNATE
1. _____	_____	_____	_____
2. _____	_____	_____	_____
3. _____	_____	_____	_____
4. _____	_____	_____	_____
5. _____	_____	_____	_____
6. _____	_____	_____	_____
7. _____	_____	_____	_____
8. _____	_____	_____	_____
9. _____	_____	_____	_____
10._____	_____	_____	_____

_____

Name (signature) Date

_____

Name (typed and printed)

_____

Title

Attachment: Holly Hill LS_13 Rehabilitation_Bid Set Specifications_04.30.19 (2019-R-38 : Lift Station #13 Rehabilitation)

ACKNOWLEDGMENT OF ADDENDA

Addenda will be issued via email and it is the Bidder's responsibility to confirm that all addenda have been received prior to submitting a bid for the project. Acknowledgment is hereby made of the following Addenda received since issuance of Drawings and Specifications:

Addendum No. _____ Dated: _____ Addendum No. _____ Dated:
Addendum No. _____ Dated: _____ Addendum No. _____ Dated:
Addendum No. _____ Dated: _____ Addendum No. _____ Dated:

Attached hereto is a cashier's check on the _____ Bank of

_____ or Bid Bond for the sum of

_____Dollars (_____),

made payable to _____(Owner).

_____
(Name of Bidder) (Affix Seal)

_____
(Signature of Officer)

_____
(Title of Officer)

_____
Name of Bidder

_____
Address

_____
City/State/Zip

_____
Telephone

_____
Contractor's Florida License Number

The full names and residences of persons and firms interested in the foregoing bid, as principals, are as follows:

_____

_____

_____

_____

END OF SECTION

Attachment: Holly Hill LS_13 Rehabilitation_Bid Set Specifications_04.30.19 (2019-R-38 : Lift Station #13 Rehabilitation)

SECTION 00 31 00
SCHEDULE OF UNIT PRICES

CITY OF HOLLY HILL
LIFT STATION #13 REHABILITATION
BID# 19WWXX

ITEM NO.	*DESCRIPTION*	*QTY*	*UNIT*	*UNIT COST*	*TOTAL*
1	Preconstruction Video	1	LS		
2	Demolition	1	LS		
3	Bypass Pumping	1	LS		
4	Complete Lift Station	1	LS		
5	Electrical	1	LS		
6	Tie-Ins				
	a) Tie-In to Existing Force Main	1	LS		
7	DIP Fittings Add or Delete	1000	LBS		
8	Cap and Abandon Existing Old Force Main	1	LS		
9	Permits and Allowances	1	LS	$10,000.00	
10	As-Built Plans	1	LS		
11	MOT	1	LS		
12	Restoration	1	LS		
				BID TOTAL	

Submitted by: _____

Contractor: _____

Address: _____

Telephone: _____ Fax: _____

State of Florida Certified General Contractor or Underground Contractor (Required Information)

Licensee: _____ License No: _____

Attachment: Holly Hill LS_13 Rehabilitation_Bid Set Specifications_04.30.19 (2019-R-38 : Lift Station #13 Rehabilitation)

SECTION 00 32 00

STATEMENT OF BIDDER'S QUALIFICATIONS

All questions must be answered and the data given must be clear and comprehensive. This statement must be notarized. If necessary, questions may be answered on separate attached sheets. The bidder may submit any additional information he desires.

A. Name of bidder.

B. Permanent main office address.

C. When organized.

D. If a corporation, where incorporated.

E. How many years have you been engaged in the contracting business under your present firm or trade name?

F. Contracts on hand: (Schedule these, showing amount of each contract and the appropriate anticipated dates of completion.)

G. General character of work performed by your company.

H.(1) Have you ever failed to complete any work awarded to you? If so, where and why?

H.(2) Provide list of any lawsuits or judgments filed by or against your company in the last three years, indicating the nature and outcome.

I. Have you ever defaulted on a contract? If so, where and why?

J. List the more important projects recently completed by your company, stating the approximate cost for each and the month and year completed.

K. List your major equipment _____.

L. Experience in construction work similar in type to this project.

M. Background and experience of the principal members of your organization, including the officers.

N. Credit available: $_____

O. Give bank reference: _____

P. Will you, upon request, fill out a detailed financial statement and furnish any other information that may be required by the Owner?

Attachment: Holly Hill LS_13 Rehabilitation_Bid Set Specifications_04.30.19 (2019-R-38 : Lift Station #13 Rehabilitation)

Q. The undersigned hereby authorizes and requests any person, firm, or corporation to furnish any information requested by the Owner in verification of the recitals comprising this Statement of Bidder's Qualifications.

Dated at _____ this _____ day of _____, 20____.

_____
Name of Bidder

By: _____
Title

State of _____

County of _____

_____ being duly sworn deposes and says that

he is the _____ of_____ and that

the answers to the _____ foregoing questions
Name of Organization

and all statements therein contained are true and correct.

Subscribed and sworn to before me this _____ day of _____, 20____.

_____
Notary Public

_____
Notary Public (Print or Type)

My commission expires: _____

Attachment: Holly Hill LS_13 Rehabilitation_Bid Set Specifications_04.30.19 (2019-R-38 : Lift Station #13 Rehabilitation)

SECTION 00 33 00
LISTING OF SUBCONTRACTORS

The Bidder proposes that the following subcontractors are qualified to perform the referenced work and have successfully done so on recent projects similar in nature and size. Upon approval of subcontractors listed the successful bidder shall not substitute subcontractors without approval from the Engineer. Bidder shall attach additional sheets as necessary.

SUBCONTRACTOR	COMPANY NAME	REFERENCES
		1) 2) 3)
		1) 2) 3)
		1) 2) 3)
		1) 2) 3)

END OF SECTION

Attachment: Holly Hill LS_13 Rehabilitation_Bid Set Specifications_04.30.19 (2019-R-38 : Lift Station #13 Rehabilitation)

SECTION 00 33 10
LISTING OF PREVIOUS EXPERIENCE

The bidder proposes that he/she is qualified to perform the referenced work and has successfully done so on recent projects similar in nature and size. A minimum of three (3) projects must be listed below. The Owner reserves the right to check references and confirm information provided herein.

NO.	PROJECT	OWNER	DESCRIPTION/COST	REFERENCE	DATE WORK STARTED & FINISHED MM/YR TO MM/YR
1					
2					
3					

END OF SECTION

Attachment: Holly Hill LS_13 Rehabilitation_Bid Set Specifications_04.30.19 (2019-R-38 : Lift Station #13 Rehabilitation)

SECTION 00 41 00
BID BOND

KNOW ALL MEN BY THESE PRESENTS, that we, _____ as Principal and _____ of the City of _____State of _____, a corporation existing under the laws of the State of Florida, as Surety, are held and firmly bound unto the _____ hereinafter called the Owner, in the sum of _____Dollars ($_____) lawful money of the United States of America, for the payment of which sum well and truly to be made, we bind ourselves our heirs, executors, administrators and successors, jointly and severally, firmly by these presents.

The condition of this obligation is such that whereas the Principal has submitted the accompanying Proposal or Bid, for the construction of:

LIFT STATION #13 REHABILITATION

NOW, THEREFORE, if the Principal shall not withdraw said Bid within ninety (90) days after the opening of the same and in the event of the acceptance of his proposal by the Owner, shall, within the period specified therefore, enter into a written contract with the Owner in accordance with the Bid as accepted, and give bond with good and sufficient surety or sureties, as may be required, for the faithful performance and proper fulfillment of such contract, or in the event of the withdrawal of said Bid within the period specified, of the failure to enter into such contract and give bonds within the time specified, if the Principal shall pay the Owner the difference between the amount specified in said Bid and the amount for which the Owner may procure the required work, if the latter amount be in excess of the former, then the above obligation shall be void and of no effect, otherwise to remain in full force and virtue.

Attachment: Holly Hill LS_13 Rehabilitation_Bid Set Specifications_04.30.19 (2019-R-38 : Lift Station #13 Rehabilitation)

IN WITNESS WHEREOF, the above bounden parties have executed this instrument under their several seals this _____ day of _____, 20__, the name and corporate seal of each corporate body being hereto affixed and these presents duly signed by its undersigned representative, pursuant to authority of its governing body.

_____(Seal)

IN PRESENCE OF:

_____ _____(Seal)

_____ _____(Seal)

Individual or Partner

Witness

_____

_____

Address

_____

Corporate Principal

ATTEST:

_____ _____

President AFFIX CORPORATE SEAL

_____

_____

Address

By_____

AFFIX
CORPORATE SEAL

_____

Corporate Surety

ATTEST:

_____ _____

Title

END OF SECTION

Attachment: Holly Hill LS_13 Rehabilitation_Bid Set Specifications_04.30.19 (2019-R-38 : Lift Station #13 Rehabilitation)

SECTION 00 47 00

SWORN STATEMENT UNDER SECTION 287.133(3)(a), FLORIDA STATUTES, ON PUBLIC ENTITY CRIMES:

This sworn statement is submitted with Bid, Proposal **or** Contract No. _____ for _____.

This sworn statement is submitted by _____whose business address is _____and (if applicable) its Federal Employer Identification Number (FEIN) is_____. (If the entity has no FEIN, include the Social Security Number of the individual signing this sworn statement: _____.)

My name is _____ any my relationship to the entity named above is _____.

I understand that a "public entity crime" as defined in Paragraph 287.133(g), Florida Statutes, means a violation of any state or federal law by a person with respect to and directly related to the transaction of business with any public entity or with an agency or political subdivision of any other state or with the United States, including, but not limited to, any bid or contract for goods or services to be provided to any public entity or an agency or political subdivision of any other state or of the United States and involving antitrust, fraud, theft, bribery, collusion, racketeering, conspiracy, or material misrepresentation.

I understand that "convicted" or "conviction" as defined in Paragraph 287.133(i)(b), Florida Statutes, means a finding of guilt or a conviction of a public entity crime, with or without an adjudication of guilt, in any federal or state trial court of record relating to charges brought by indictment or information after July 1, 1989, as a result of a jury verdict, nonjury trial, or entry of a plea of guilty or nolo contenders.

I understand that an "affiliate" as defined in Paragraph **287.133(l)(a),** Florida Statutes, means:

1. A predecessor or successor of a person convicted of a public entity crime: or

2. An entity under the control of any natural person who is active in the management of the entity and who has been convicted of a public entity crime. The term "affiliate" includes those officers, directors, executives, partners, shareholders, employees, members, and agents who are active in the management of an affiliate. The ownership by one person of shares constituting a controlling interest in another person, or a pooling of equipment or income among persons when not for fair market value under an arm's length agreement, shall be a prima facie that one person controls another person. A person who knowingly enters into a joint venture with a

Attachment: Holly Hill LS_13 Rehabilitation_Bid Set Specifications_04.30.19 (2019-R-38 : Lift Station #13 Rehabilitation)

person who has been convicted of a public entity crime in Florida during the preceding 36 months shall be considered an affiliate.

I understand that a "person" as defined in Paragraph 287.133(i)(e), Florida Statutes, means any natural person or entity organized under the laws of any state or of the United States with the legal power to enter into a binding contract and which bids or applies to bid on contracts for the provision of goods or services let by a public entity, or which otherwise transacts or applies to transact business with a public entity. The term "person" includes those officers, directors, executives, partners, shareholders, employees, members, and agents who are active in management of an entity.

Based on information and belief, the statement which I have marked below is true in relation to the entity submitting this sworn statement. (Please indicate which statement applies).

____ Neither the entity submitting this sworn statement, nor any officers, directors, executives, partners, shareholders, employees, members or agents who are active in management of the entity, nor any affiliate of the entity have been charged with and convicted of a public entity crime subsequent to July 1, 1989.

_____ The entity submitting this sworn statement, or one or more of the officers, directors, executives, partners, shareholders, employees, members, or agents who are active in management of the entity, or an affiliate of the entity has been charged with and convicted of a public entity crime subsequent to July 1, 1989, AND (Please indicate which additional statement applies.)

_____ There has been a proceeding concerning the conviction before a hearing officer of the State of Florida, Division of Administrative Hearings. The final order entered by the hearing officer did not place the person or affiliate on the convicted vendor list. (Please attach a copy of the final order.)

_____ The person or affiliate was placed on the convicted vendor list. There has been a subsequent proceeding before a hearing officer of the State of Florida, Division of Administrative Hearings. The final order entered by the hearing officer determined that it was in the public interest to remove the person or affiliate from the convicted vendor list. (Please attach a copy of the final order).

Attachment: Holly Hill LS_13 Rehabilitation_Bid Set Specifications_04.30.19 (2019-R-38 : Lift Station #13 Rehabilitation)

(Signature) _____ Date:_____

State of _____County of_____

PERSONALLY APPEARED BEFORE ME, the undersigned authority, _____ who, after first being sworn by me, affixed his/her signature in the space provided above on this _____day of_____, 20__.

_____
Notary Public

My Commission Expires:

Attachment: Holly Hill LS_13 Rehabilitation_Bid Set Specifications_04.30.19 (2019-R-38 : Lift Station #13 Rehabilitation)

SECTION 00 48 00
ANTI-COLLUSION STATEMENT

By signing this form, the bidder agrees that this is made without any other understanding, agreement, or connection with any person, corporation, or firm submitting a proposal for the same purpose and that the proposal is in all respects fair and without collusion or fraud.

SIGN in ink in the space provided below. Unsigned bids will be considered incomplete, and will be disqualified, and rejected.

IT IS AGREED BY THE UNDERSIGNED BIDDER THAT THE SIGNING AND DELIVERY OF THE BID REPRESENTS THE BIDDER'S ACCEPTANCE OF THE TERMS AND CONDITIONS OF THE FORGOING SPECIFICATIONS, CONTRACT AND PROVISIONS, AND IF AWARDED, THIS CONTRACT WILL REPRESENT THE AGREEMENT BETWEEN EACH OF THE GOVERNMENTAL PARTIES.

NAME OF FIRM: _____

SIGNED BY: _____
(MUST BE SIGNED BY A COMPANY OFFICER OR AUTHORIZED AGENT)

TITLE: _____

ADDRESS: _____

CITY AND STATE: _____

TELEPHONE: _____

COMPLETION TIME: _____

NO proposals will be withdrawn for a period of ninety (90) days subsequent to the opening of the proposals, without the consent of the City of Holly Hill.

NO BID (REASON) _____

_____

_____

END OF SECTION

Attachment: Holly Hill LS_13 Rehabilitation_Bid Set Specifications_04.30.19 (2019-R-38 : Lift Station #13 Rehabilitation)

SECTION 00 48 50
DRUG FREE/TIE PREFERENCE STATEMENT

In the event of a tie bid a preference is given to vendors submitting a certification with their bid/proposal certifying they have a drug-free workplace in accordance with Section 287.087, Florida Statutes. This requirement affects all public entities of the State and becomes effective January 1, 1991. The special conditions are as follow:

IDENTICAL TIE BIDS - Preference shall be given to businesses with drug-free workplace programs. Whenever two or more bids which are equal with respect to price, quality, and service are received by the State or by any political subdivision for the procurement of commodities or contractual services, a bid received from a business that certifies that it has implemented a drug-free workplace program shall be given preference in the award process. Established procedures for processing tie bids will be followed if none of the tied vendors have a drug-free workplace program. In order to have a drug-free workplace program, a business shall:

1. Publish a statement notifying employees that the unlawful manufacture, distribution, dispensing, possession, or use of a controlled substance is prohibited in the workplace and specifying the actions that will be taken against employees for violations of such prohibition.

2. Inform employees about the dangers of drug abuse in the workplace, the business's policy of maintaining a drug-free workplace, any available drug counseling, rehabilitation and employee assistance programs, and the penalties that may be imposed upon employees for drug abuse violations.

3. Give each employee engaged in providing the commodities or contractual services that are under bid a copy of the statement specified in subsection (1).

4. In the statement specified in subsection (1), notify the employees that, as a condition of working on the commodities or contractual services that are under bid, the employee will abide by the terms of the statement and will notify the employer of any conviction or, or plea of guilty or nolo contendere to, any violation of chapter 893 or of any controlled substance law of the United States or any state, for a violation occurring in the workplace no later than five (5) days after such conviction.

5. Impose a sanction on, or require the satisfaction participation in a drug abuse assistance or rehabilitation program if such is available in the employee's community, by any employee who is so convicted.

6. Make a good faith effort to continue to maintain a drug-free workplace through implementation of this section.

As the person authorized to sign the statement, I certify that this firm complies fully with the above requirements.

_____
VENDOR'S SIGNATURE

END OF SECTION

Attachment: Holly Hill LS_13 Rehabilitation_Bid Set Specifications_04.30.19 (2019-R-38 : Lift Station #13 Rehabilitation)

SECTION 00 49 00
TRENCH SAFETY AFFIDAVIT

Trench excavations on this Project are expected to be in excess of 5 feet deep. The Occupational Safety and Health Administration excavation safety standards, 29 CFR 1926.650 Subpart P trench safety standards will be in effect during the period of construction of the Project.

Bidder acknowledges that included in the Bid Price are costs for complying with the Florida Trench Safety Act (90-096, Laws of FL) effective October 1, 1990, and hereby gives assurance that, if awarded the Contract, the Contractor or Subcontractor performing trench excavation work on the Project will comply with the applicable trench safety standards. The Bidder further identifies the costs as follows:

Trench Safety Item (Description)	Cost
_____	_____
_____	_____
_____	_____
_____	_____
_____	_____

_____
(Cost in Words)

TOTAL $ _____

FAILURE TO COMPLETE THE ABOVE SHALL RESULT IN THE BID BEING DECLARED NON-RESPONSIVE

COMPANY NAME: _____

DATE: _____ BY: _____

(Additional sheets shall be attached, as needed and, items shall be organized to correspond with the bid format)

Attachment: Holly Hill LS_13 Rehabilitation_Bid Set Specifications_04.30.19 (2019-R-38 : Lift Station #13 Rehabilitation)

SECTION 00 50 00

AGREEMENT

THIS AGREEMENT, entered into this _____ day of _____, 20__, by the City of Holly Hill, Florida, hereinafter called the OWNER, Party of the First Part, and a CORPORATION known as _____organized and existing under the laws of the State of_____; PARTNERSHIP known as_____ consisting of the following members:_____ an INDIVIDUAL _____ trading as _____ of _____ City _____ State of _____ Zip Code _____, hereinafter called the CONTRACTOR, Party of the Second Part.

WITNESSETH: That the parties hereto do mutually agree as follows:

ARTICLE I.

A. The Contractor agrees to furnish all labor, superintendence, materials, plant and other utilities for, perform all work necessary for or incidental to, and to perform all other obligations imposed by this Contract for the Construction of

LIFT STATION #13 REHABILITATION

herein called for, in strict accordance with the Drawings and Specifications prepared by Mead & Hunt, Inc., Engineers, which Contract include, but is not limited to, the following Contract Documents:

a. Invitation
b. Instructions
c. Proposal
d. This Agreement
e. Performance Bond
f. Labor and Material Payment Bond
g. Insurance
h. Specifications
i. Addenda (if any)
j. Drawings

ARTICLE II.

A. The Contractor agrees that the work shall be started not later than the date indicated in the Notice to Proceed and that all work shall be completed within **150 days with an additional 30 days for final completion**.

B. The Contractor further agrees that for each calendar day, with the exception of Sundays and legal holidays, which any work shall remain uncompleted after the stations completion times stipulated above, the sum of **$1000 (ONE THOUSAND DOLLARS)** shall be deducted from monies due the Contractor, not as a penalty, but as liquidated damages. If the Contractor is declared in default in accordance with the provisions of the Specifications, liquidated damages shall be charged as provided herein, and such amounts shall be deducted

Attachment: Holly Hill LS_13 Rehabilitation_Bid Set Specifications_04.30.19 (2019-R-38 : Lift Station #13 Rehabilitation)

from the final amount payable to the Contractor or his Surety. Should the total amount chargeable as liquidated damages exceed the amount due or payable to the Contractor or his Surety, then such excess shall be paid to the Owner by the Contractor or his Surety.

ARTICLE III.

A. The Contractor shall receive and accept the compensation for the performance of the Contract (subject to additions or deductions noted therein) in accordance with the prices stipulated in the Proposal, and in the manner provided in Article IV for the Contract Price of $_____ and for additions or revisions approved in Change Orders at Unit Prices.

ARTICLE IV.

A. Payment to the Contractor shall be made as follows:

1. Not later than the fifteenth (15th) day of each calendar month, the Owner will make a partial payment to the Contractor on the basis of a duly certified and approved estimate by the Engineer of the work performed during the preceding calendar month under this Contract, and (at the option of the City) an amount equal to 90% of materials and equipment not incorporated in the work but delivered and suitably stored. When payment to the Contractor is made for stored materials and equipment, Contractor shall submit invoices marked paid by the supplier with the next month's request for payment to document that Contractor has paid for said materials and equipment or the previously paid amount for stored materials shall be deducted from any remaining payment(s) for any stored materials not so properly documented. To insure the proper performance of this Contract, the Owner will retain ten percent (10%) of the amount of each estimate until the work is fifty percent (50%) complete.

2. When work is fifty percent (50%) complete, the Owner may allow the reduction of the withholding to five percent (5%) of the dollar value of all work satisfactorily completed to date, provided that the Contractor is making satisfactory progress and there is no specific cause for greater withholding.

3. Upon completion of the entire work under Contract, the Engineer shall make a final inspection and certify such completion to the Owner. Upon approval of the completion certificate by the Owner, the Owner shall notify the Contractor and the Surety of the satisfactory completion of the work and except as otherwise provided in the Specifications, final payment therefore shall be made to the Contractor within thirty (30) days after written acceptance by the Contractor of the final certificate computation.

Attachment: Holly Hill LS_13 Rehabilitation_Bid Set Specifications_04.30.19 (2019-R-38 : Lift Station #13 Rehabilitation)

ARTICLE V.

A. The Contract shall not sublet, sell, transfer, assign, or otherwise dispose of the Contract or any portion thereof, or his right, title or interest therein, without written consent of the Owner.

ARTICLE VI.

A. The work shall be subject at all times to the supervision of the Engineer and his authorized assistants. The Engineer shall decide all questions which may arise relative to the Drawings, Specifications, and the performance of the work. Any doubt concerning the meaning of the Specifications and the Drawings, or any ambiguity or obscurity as to wording or intent of them shall be decided by the Engineer, and such decisions shall be binding upon both parties hereto, and shall not be subject to arbitration.

ARTICLE VII.

A. The Contractor shall guarantee his work and shall remedy, without cost to the Owner, any defects which may develop therein during a period of one (1) year from the date of the Owner's approval of the Completion Certificate issued by the Engineer.

ARTICLE VIII.

A. In the event of conflict between any of the Contract Documents, the provisions of this Agreement shall govern.

IN WITNESS WHEREOF, the Parties hereto have signed this Contract in quintuplicate the day and year first above written.

ATTEST:

CITY OF HOLLY HILL, FLORIDA

_____
Valerie Manning

By_____
Joseph A. Forte

Title City Clerk

Title City Manager

_____
CONTRACTOR

WITNESS:

_____

By_____

END OF SECTION

Attachment: Holly Hill LS_13 Rehabilitation_Bid Set Specifications_04.30.19 (2019-R-38 : Lift Station #13 Rehabilitation)

SECTION 00 62 00
CERTIFICATE AS TO CORPORATE PRINCIPAL

I,_____, certify that I am the _____ of the corporation named as Principal in the within Bid Bond; that _____ who signed the said Bid Bond on behalf of the Principal was then_____ of said corporation; that I know his signature, and his signature thereto is genuine; and that said Bid Bond was duly signed, sealed and attested for in behalf of said corporation by authority of its governing body.

AFFIX CORPORATE SEAL

END OF SECTION

Attachment: Holly Hill LS_13 Rehabilitation_Bid Set Specifications_04.30.19 (2019-R-38 : Lift Station #13 Rehabilitation)

Return Recorded Document to:
City Clerk
1065 Ridgewood Avenue
Holly Hill, FL 32117

LIFT STATION #13 REHABILITATION

Name of Project

City Project No. 19WW05
Bond No. _____

Space Reserved for Recording Data

COMBINATION PAYMENT AND PERFORMANCE BOND FOR PUBLIC CONSTRUCTION

per Section 255.05, Florida Statutes (2010)
Guaranty for Construction of Public Improvements

BY THIS BOND, We, _____, as Principal, and _____ _____, a corporation, as Surety, are bound to **CITY OF HOLLY HILL, FLORIDA**, a municipal corporation, herein called Owner or sometimes referred to as "City," in the sum of _____ and ___/100 Dollars ($_____), for payment of which we bind ourselves, our heirs, personal representatives, successors, and assigns, jointly and severally.

THE CONDITION OF THIS BOND is that if Principal:

1. Performs the terms of that certain Contract having an effective date of _____, entered into by and between the Principal and the City, hereinafter sometimes referred to as the Contract, entered into between Principal and Owner for construction of improvements reflected on the plans approved by the City Council, as prepared by Kevin A. Lee, P.E., Florida Registration No. 71501, of the engineering firm Mead & Hunt, Inc., the "Contract," being made a part of this bond by reference, at the times and in the manner prescribed in the Contract; and

2. Promptly makes payments to all claimants, as defined in Section 255.05(1), Florida Statutes, supplying Principal with labor, materials, or supplies, used directly or indirectly by Principal in the prosecution of the work provided for in the Contract (the "Work"); and

3. Pays Owner all losses, damages, delay damages (including contractually authorized liquidated damages), expenses, costs, and attorney's fees, including appellate proceedings, that Owner sustains because of a breach or material breach by Principal under the Contract Documents; and

4. Performs the guarantee of all work and materials furnished under the Contract for the time specified in the Contract, then this bond is void; otherwise it remains in full force.

Notice of Nonpayment and Time Limitations

Pursuant to Florida Statutes Section 255.05, as amended from time to time, a claimant, except a laborer, who is not in privity with the Principal, shall, before commencing or not later than forty-five (45) days after commencing to furnish labor, materials, or supplies for the prosecution of the Work, furnish the Principal with a notice that he or she intends to look to this bond for protection. A claimant who is not in privity with the Principal and who has not received payment for his or her labor, materials, or supplies shall deliver to the Principal and to the Surety written notice of the performance of the labor or delivery of the materials or supplies and of the nonpayment. The notice of nonpayment may be served at any time during the progress of the Work or thereafter but not before forty-five (45) days after the first furnishing of labor, services, or materials by the claimant or,

Capital Project
11/8/2010 - LL

Attachment: Holly Hill LS_13 Rehabilitation_Bid Set Specifications_04.30.19 (2019-R-38 : Lift Station #13 Rehabilitation)

with respect to rental equipment, not later than ninety (90) days after the date that the rental equipment was last on the job site available for use. No action for the labor, materials, or supplies may be instituted against the Principal or the Surety unless both notices have been given. Notices required or permitted under this section may be served in accordance with Section 713.18, Florida Statutes. An action, except for an action exclusively for recovery of retainage, must be instituted against the Principal or the Surety on this bond within one (1) year after the performance of the labor or completion of delivery of the materials or supplies. An action exclusively for recovery of retainage must be instituted against the Principal or the Surety within one (1) year after the performance of the labor or completion of delivery of the materials or supplies, or within ninety (90) days after receipt of final payment (or the payment estimate containing the Owner's final reconciliation of quantities if no further payment is earned and due as a result of deductive adjustments) by the Principal or Surety, whichever comes last.

Any changes in or under the contract documents and compliance or noncompliance with any formalities connected with the contract or the changes does not affect Surety's obligation under this bond.

IN WITNESS WHEREOF, this performance and payment bond is executed in duplicate originals, each of which shall be deemed an original, this _____, day of _____, 20____.

_____
(Name of Principal)

Attest:

_____
(As to Corporate Principal) Secretary

By:_____

Name/Title:_____

_____
(Witness to Principal)

(*Corporate Seal*)

_____
(Surety)

_____
(Witness to Surety)

By:_____

(Attorney-In-Fact)

(*Corporate Seal*)

NOTE: Date of BOND must not be prior to date of Contract. If Developer/Principal is Partnership, all partners should execute BOND. All BONDS signed by an agent must be accompanied by a certified copy of the authority to act.

IMPORTANT: Surety companies executing BONDS must appear on the Treasury Department's most current list (Circular 570 as amended) and be authorized to transact business in the State of Florida.

Attachment: Holly Hill LS_13 Rehabilitation_Bid Set Specifications_04.30.19 (2019-R-38 : Lift Station #13 Rehabilitation)

SECTION 00 64 00

Front Page for Bond required by Section 255.05, F.S

PAYMENT AND PERFORMANCE BOND

(Public Works)

Notice and Time Limitations Must Be In Accordance
With Section 255.05 Florida Statutes (2010)

BOND No. _____

PRINCIPAL:
Name of Developer/Contractor: _____
Address: _____
_____
Contact Person: _____
Phone Number: ( ) _____ - _____

SURETY: _____
Address: _____
_____
Contact Person: _____
Phone Number: ( ) _____ - _____

OWNER: City of Holly Hill, Florida, a chartered municipal corporation
1065 Ridgewood Avenue
Holly Hill, FL 32117
Contact Person: City Manager
Phone Number: (386) 248-9463

Amount: $_____ **City Case/Project No**. 19WW05

Description of Work: *The rehabilitation of the City of Holly Hill Lift Station #13 includes the conversion of the can lift station into a submersible station. Work includes bypass pumping, demolition of (2) existing pumps, piping, and valves to abandon pump can. Installation of two (2) new submersible pumps, top slab, piping, valves, valve vault, electrical panel and control panel.*

Project Location: Holly Hill, Volusia County, Florida

Legal Description: City Right-of-Way or Easement.

Front Page

All other pages are subsequent to this page regardless of any numbers that may be printed thereon.

Attachment: Holly Hill LS_13 Rehabilitation_Bid Set Specifications_04.30.19 (2019-R-38 : Lift Station #13 Rehabilitation)

Certificate for Filing in Public Records

PAYMENT AND PERFORMANCE BOND

(Public Works)
In Compliance with Section 255.05(1)(a) Florida Statutes (2010)

Bond No. _____

The Principal, _____
by and through its undersigned representative, does hereby certify that the attached:

Payment and Performance Bond No. _____,
is a true and correct copy of the fully executed financial guarantee delivered to:

CITY OF HOLLY HILL, FLORIDA
pursuant to Section 255.05, Florida Statutes (2010); as Owner/Holder of the subject property in trust for the public, for the public construction project known as:

LIFT STATION #13 REHABILITATION

located in Holly Hill, Volusia County, Florida, and identified by the City of Holly Hill as Case No. 19WW05.

All claimants are called upon to take notice of the notice requirements and time limitations prescribed by Section 255.05(2), Florida Statutes (2010).

_____
a Florida _____
Mailing Address:
_____

By:_____
Name/Title:_____

STATE OF FLORIDA
COUNTY OF VOLUSIA

The foregoing Certificate of Filing was acknowledged before me this _____ day of _____, 20____, by _____as a duly authorized representative of _____a Florida_____, the Principal named in the attached **Payment and Performance Bond No. _____.**

Notary, please check one:
_____ Personally known to me
_____ Produced identification

_____
Notary Public, State of Florida

My Commission Expires: _____ Printed Name: _____

Attachment: Holly Hill LS_13 Rehabilitation_Bid Set Specifications_04.30.19 (2019-R-38 : Lift Station #13 Rehabilitation)

SECTION 00 65 00
CERTIFICATE OF INSURANCE
FOR
PUBLIC LIABILITY AND PROPERTY DAMAGE

This is to certify _____ Company has issued to _____, of the City of _____, State of _____, the following policy or policies; Public Liability Policy No. _____ effective on _____, 20___, limits_____, Property Damage Policy No. _____ effective on _____, 20__, and expiring on _____, 20___, limits _____.

If at any time this coverage is to be canceled, the undersigned will notify the insured and _____, in writing thirty (30) days prior to cancellation of the policy.

_____

(This certificate must be made by a duly authorized official of the Insurance Company carrying the risk, or a separate certificate of similar context executed on Insurance Company's Standard Form may be attached hereto.)

END OF SECTION

Attachment: Holly Hill LS_13 Rehabilitation_Bid Set Specifications_04.30.19 (2019-R-38 : Lift Station #13 Rehabilitation)

SECTION 00 66 00
AFFIDAVIT REGARDING WORKMEN'S COMPENSATION

State of _____

County of _____

_____being duly sworn according to law, deposes and says (it, he, they) ha___ accepted the Workmen's Compensation laws of the State of Florida, with its supplements and amendments and has insured (its, his, their) liability there under in accordance with the terms of said Laws with the _____Company, under the terms of Policy No. _____ for a period from _____, 20 to _____, 20 __.

WITNESS:

_____

CONTRACTOR:

_____

By_____

Title_____

Sworn to and subscribed before me this ____ day of _____, 20___.

_____
Notary Public

_____
Notary Public (Print or Type)

My Commission Expires:_____

END OF SECTION

Attachment: Holly Hill LS_13 Rehabilitation_Bid Set Specifications_04.30.19 (2019-R-38 : Lift Station #13 Rehabilitation)

SECTION 00 66 50
CERTIFICATE OF INSURANCE
FOR
WORKMEN'S COMPENSATION

This is to certify that _____, Company has issued to _____, of the City of_____, State of , the following policy or policies: Workmen's Compensation and Employer's Liability Policy No. effective on _____, 20 _____.
re _____ Policy No. _____
effective on_____, 20_____ and expiring on _____, 20
re _____limits _____.

If at any time this coverage is to be canceled, the undersigned will notify the insured and the _____in writing thirty (30) days prior to cancellation of policy.

_____

(This certificate must be made by a duly authorized official of the Insurance Company carrying the risk, or a separate certificate of similar context executed on Insurance Company's Standard Form may be attached hereto.)

END OF SECTION

Attachment: Holly Hill LS_13 Rehabilitation_Bid Set Specifications_04.30.19 (2019-R-38 : Lift Station #13 Rehabilitation)

SECTION 00 67 00
CONTRACTOR'S STATEMENT UNDER OATH, TO OWNER

To: _____

_____

The undersigned as Contractor has heretofore, on the ___ day of _____, 20 __, has been awarded a Contract by you, as Owner, to furnish all the materials and labor in the construction of a project entitled: _____
for the Contract Price of _____ in accordance with plans and specifications therefore as prepared by Mead & Hunt, Inc., P.O. Drawer 290247, 4401 Eastport Parkway, Holly Hill, Florida 32129-0247.

Said project has been completed and the Contract and Plans therefore fully complied with and all of the Contract Price has been paid by you, except the Final Payment thereon, which is now due, but is being withheld until a sworn statement is furnished, as required by _____ showing whether there are any unpaid and outstanding bills in connection with said Project.

The undersigned hereby certified, under oath, that all lienors contracting directly with or directly employed by the undersigned, on said Contract, have been paid in full, and further certifies, under oath, that there are no outstanding or unpaid bills for labor performed, or materials furnished in connection with said work or improvements.

Dated at _____ this ___ day of _____, 20___.

By_____
Contractor

Title_____

State of _____

County of _____

Sworn to and subscribed before me this _____ day of _____, 20 _____.

_____
Notary Public

My Commission Expires: _____

END OF SECTION

Attachment: Holly Hill LS_13 Rehabilitation_Bid Set Specifications_04.30.19 (2019-R-38 : Lift Station #13 Rehabilitation)

SECTION 00 68 00
RECEIPT AND RELEASE

KNOW ALL MEN BY THESE PRESENTS:

That the undersigned_____ of _____ was heretofore, on _____, 20 ___, award a Contract by _____ for the Contract Price of to furnish all the materials and labor in the construction of a project entitled: **LIFT STATION #13 REHABILITATION** in accordance with the plans and specifications therefore, as prepared by Mead & Hunt, Inc., Engineers, and the undersigned has completed said work and fully complied with said Contract and has heretofore received the sum of $_____ as payment thereon.

That the undersigned has this date received from _____ the sum of $_____, representing the full balance due _____, as Contractor, under the terms of said Contract, and certified that said Contract has been fully performed in accordance with the terms thereof, and that _____has paid in full all persons furnishing labor and/or materials in connection therewith, including all subcontractors and suppliers, and that there are no unpaid bills for labor performed or materials furnished in connection with said work or improvements.

That the undersigned, for value received, does hereby forever release and discharge the said _____ as described in the said Contract, from any and all liens, claims or demands whatsoever that _____ has or may have for work performed or materials furnished thereon by any subcontractor or supplier and that will hold harmless the _____from any and all loss and liability arising or to arise by reason of any unpaid bills for labor performed or materials furnished on said project in connection with said work or improvements. This document is only binding upon receipt of a check for the above balance due.

IN WITNESS WHEREOF, the undersigned has hereto set ____ hand and seal this _____ day of _____ _____, 20 ___.

Witnessed by:

_____
CONTRACTOR

_____

By_____

Title_____

State of _____
County of _____

Before me, the undersigned authority, personally appeared _____, to me well known and known to me to be the person described in and who executed the foregoing instrument, and he acknowledged before me that he executed the same.

IN WITNESS WHEREOF, I have hereunto set my hand and official seal this ___ day of _____ , 20 ___.

My Commission Expires:

_____
Notary Public, State of Florida

END OF SECTION

Attachment: Holly Hill LS_13 Rehabilitation_Bid Set Specifications_04.30.19 (2019-R-38 : Lift Station #13 Rehabilitation)

SECTION 00 69 00
CONSENT OF SURETY
For Final Payment

Project Name: **LIFT STATION #13 REHABILITATION**

Location _____

Project No._____ Contract No._____

Type of Contract_____

Amount of Contract_____

In accordance with the provisions of the above-named contract between the Owner and the Contractor, the following named surety:_____ on the Payment Bond of the following named Contractor: _____ hereby approves of final payment to the Contractor, and further agrees that said final payment to the Contractor shall not relieve the Surety Company named herein of any of its obligations to the following named Owner, as set forth in said Surety company's bond: _____.

IN WITNESS WHEREOF, the Surety Company has hereunto set its hand and seal this day of _____, 20 ____.

(Name of Surety Company)

(Signature of Authorized Representative)

(Affix Corporate Seal)

TITLE

END OF SECTION

Attachment: Holly Hill LS_13 Rehabilitation_Bid Set Specifications_04.30.19 (2019-R-38 : Lift Station #13 Rehabilitation)

This document has important legal consequences; consultation with an attorney is encouraged with respect to its use or modification. This document should be adapted to the particular circumstances of the contemplated Project and the controlling Laws and Regulations.

STANDARD GENERAL CONDITIONS OF THE CONSTRUCTION CONTRACT

Prepared by

ENGINEERS JOINT CONTRACT DOCUMENTS COMMITTEE

and

Issued and Published Jointly by

ACEC
American Council of Engineering Companies

The Associated General Contractors of America
Skill Responsibility Integrity

ASCE American Society of Civil Engineers

National Society of Professional Engineers
Professional Engineers in Private Practice

AMERICAN COUNCIL OF ENGINEERING COMPANIES

ASSOCIATED GENERAL CONTRACTORS OF AMERICA

AMERICAN SOCIETY OF CIVIL ENGINEERS

PROFESSIONAL ENGINEERS IN PRIVATE PRACTICE
A Practice Division of the
NATIONAL SOCIETY OF PROFESSIONAL ENGINEERS

Endorsed by

CSI

CONSTRUCTION SPECIFICATIONS INSTITUTE

Attachment: Holly Hill LS_13 Rehabilitation_Bid Set Specifications_04.30.19 (2019-R-38 : Lift Station #13 Rehabilitation)

Copyright © 2007 National Society of Professional Engineers for EJCDC. All rights reserved.

These General Conditions have been prepared for use with the Suggested Forms of Agreement Between Owner and Contractor (EJCDC C-520 or C-525, 2007 Editions). Their provisions are interrelated and a change in one may necessitate a change in the other. Comments concerning their usage are contained in the Narrative Guide to the EJCDC Construction Documents (EJCDC C-001, 2007 Edition). For guidance in the preparation of Supplementary Conditions, see Guide to the Preparation of Supplementary Conditions (EJCDC C-800, 2007 Edition).

Copyright © 2007 National Society of Professional Engineers
1420 King Street, Alexandria, VA 22314-2794
(703) 684-2882
www.nspe.org

American Council of Engineering Companies
1015 15th Street N.W., Washington, DC 20005
(202) 347-7474
www.acec.org

American Society of Civil Engineers
1801 Alexander Bell Drive, Reston, VA 20191-4400
(800) 548-2723
www.asce.org

Associated General Contractors of America
2300 Wilson Boulevard, Suite 400, Arlington, VA 22201-3308
(703) 548-3118
www.agc.org

The copyright for this EJCDC document is owned jointly by the four
EJCDC sponsoring organizations and held in trust for their benefit by NSPE.

Copyright © 2007 National Society of Professional Engineers for EJCDC. All rights reserved.

Attachment: Holly Hill LS_13 Rehabilitation_Bid Set Specifications_04.30.19 (2019-R-38 : Lift Station #13 Rehabilitation)

STANDARD GENERAL CONDITIONS OF THE CONSTRUCTION CONTRACT

TABLE OF CONTENTS

Page

Article 1 – Definitions and Terminology 7
1.01 Defined Terms 7
1.02 Terminology 11

Article 2 – Preliminary Matters 13
2.01 Delivery of Bonds and Evidence of Insurance 13
2.02 Copies of Documents 13
2.03 Commencement of Contract Times; Notice to Proceed 13
2.04 Starting the Work 13
2.05 Before Starting Construction 14
2.06 Preconstruction Conference; Designation of Authorized Representatives 14
2.07 Initial Acceptance of Schedules 14

Article 3 – Contract Documents: Intent, Amending, Reuse 15
3.01 Intent 15
3.02 Reference Standards 15
3.03 Reporting and Resolving Discrepancies 16
3.04 Amending and Supplementing Contract Documents 17
3.05 Reuse of Documents 17
3.06 Electronic Data 17

Article 4 – Availability of Lands; Subsurface and Physical Conditions; Hazardous Environmental Conditions; Reference Points 188
4.01 Availability of Lands 18
4.02 Subsurface and Physical Conditions 18
4.03 Differing Subsurface or Physical Conditions 199
4.04 Underground Facilities 20
4.05 Reference Points 22
4.06 Hazardous Environmental Condition at Site 22

Article 5 – Bonds and Insurance 24
5.01 Performance, Payment, and Other Bonds 24
5.02 Licensed Sureties and Insurers 25
5.03 Certificates of Insurance 25
5.04 Contractor's Insurance 255
5.05 Owner's Liability Insurance 27
5.06 Property Insurance 27
5.07 Waiver of Rights 29

Attachment: Holly Hill LS_13 Rehabilitation_Bid Set Specifications_04.30.19 (2019-R-38 : Lift Station #13 Rehabilitation)

Copyright © 2007 National Society of Professional Engineers for EJCDC. All rights reserved.

5.08 Receipt and Application of Insurance Proceeds 309
5.09 Acceptance of Bonds and Insurance; Option to Replace 30
5.10 Partial Utilization, Acknowledgment of Property Insurer 30

Article 6 – Contractor's Responsibilities 30
6.01 Supervision and Superintendence 30
6.02 Labor; Working Hours 31
6.03 Services, Materials, and Equipment 31
6.04 Progress Schedule 31
6.05 Substitutes and "Or-Equals" 32
6.06 Concerning Subcontractors, Suppliers, and Others 34
6.07 Patent Fees and Royalties 36
6.08 Permits 36
6.09 Laws and Regulations 37
6.10 Taxes 37
6.11 Use of Site and Other Areas 37
6.12 Record Documents 38
6.13 Safety and Protection 38
6.14 Safety Representative 39
6.15 Hazard Communication Programs 39
6.16 Emergencies 41
6.17 Shop Drawings and Samples 41
6.18 Continuing the Work 43
6.19 Contractor's General Warranty and Guarantee 43
6.20 Indemnification 44
6.21 Delegation of Professional Design Services 43

Article 7 – Other Work at the Site 44
7.01 Related Work at Site 44
7.02 Coordination 45
7.03 Legal Relationships 45

Article 8 – Owner's Responsibilities 47
8.01 Communications to Contractor 47
8.02 Replacement of Engineer 47
8.03 Furnish Data 47
8.04 Pay When Due 46
8.05 Lands and Easements; Reports and Tests 46
8.06 Insurance 46
8.07 Change Orders 46
8.08 Inspections, Tests, and Approvals 46
8.09 Limitations on Owner's Responsibilities 48
8.10 Undisclosed Hazardous Environmental Condition 48
8.11 Evidence of Financial Arrangements 48
8.12 Compliance with Safety Program 497

Attachment: Holly Hill LS_13 Rehabilitation_Bid Set Specifications_04.30.19 (2019-R-38 : Lift Station #13 Rehabilitation)

Copyright © 2007 National Society of Professional Engineers for EJCDC. All rights reserved.

Article 9 – Engineer's Status During Construction 47
9.01 Owner's Representative 47
9.02 Visits to Site 47
9.03 Project Representative 49
9.04 Authorized Variations in Work 48
9.05 Rejecting Defective Work 48
9.06 Shop Drawings, Change Orders and Payments 48
9.07 Determinations for Unit Price Work 50
9.08 Decisions on Requirements of Contract Documents and Acceptability of Work 49
9.09 Limitations on Engineer's Authority and Responsibilities 49
9.10 Compliance with Safety Program 50

Article 10 – Changes in the Work; Claims 50
10.01 Authorized Changes in the Work 50
10.02 Unauthorized Changes in the Work 52
10.03 Execution of Change Orders 52
10.04 Notification to Surety 51
10.05 Claims 51

Article 11 – Cost of the Work; Allowances; Unit Price Work 52
11.01 Cost of the Work 52
11.02 Allowances 55
11.03 Unit Price Work 58

Article 12 – Change of Contract Price; Change of Contract Times 56
12.01 Change of Contract Price 56
12.02 Change of Contract Times 60
12.03 Delays 58

Article 13 – Tests and Inspections; Correction, Removal or Acceptance of Defective Work 59
13.01 Notice of Defects 59
13.02 Access to Work 59
13.03 Tests and Inspections 59
13.04 Uncovering Work 60
13.05 Owner May Stop the Work 60
13.06 Correction or Removal of Defective Work 61
13.07 Correction Period 61
13.08 Acceptance of Defective Work 62
13.09 Owner May Correct Defective Work 62

Article 14 – Payments to Contractor and Completion 63
14.01 Schedule of Values 63
14.02 Progress Payments 63
14.03 Contractor's Warranty of Title 66
14.04 Substantial Completion 66

Copyright © 2007 National Society of Professional Engineers for EJCDC. All rights reserved.

Attachment: Holly Hill LS_13 Rehabilitation_Bid Set Specifications_04.30.19 (2019-R-38 : Lift Station #13 Rehabilitation)

14.05 Partial Utilization 67
14.06 Final Inspection 68
14.07 Final Payment 68
14.08 Final Completion Delayed 69
14.09 Waiver of Claims 69

Article 15 – Suspension of Work and Termination 70
15.01 Owner May Suspend Work 70
15.02 Owner May Terminate for Cause 70
15.03 Owner May Terminate For Convenience 71
15.04 Contractor May Stop Work or Terminate 72

Article 16 – Dispute Resolution 72
16.01 Methods and Procedures 72

Article 17 – Miscellaneous 73
17.01 Giving Notice 73
17.02 Computation of Times 73
17.03 Cumulative Remedies 73
17.04 Survival of Obligations 74
17.05 Controlling Law 74
17.06 Headings 74

Attachment: Holly Hill LS_13 Rehabilitation_Bid Set Specifications_04.30.19 (2019-R-38 : Lift Station #13 Rehabilitation)

Copyright © 2007 National Society of Professional Engineers for EJCDC. All rights reserved.

ARTICLE 1 – DEFINITIONS AND TERMINOLOGY

1.01 *Defined Terms*

A. Wherever used in the Bidding Requirements or Contract Documents and printed with initial capital letters, the terms listed below will have the meanings indicated which are applicable to both the singular and plural thereof. In addition to terms specifically defined, terms with initial capital letters in the Contract Documents include references to identified articles and paragraphs, and the titles of other documents or forms.

1. Addenda—Written or graphic instruments issued prior to the opening of Bids which clarify, correct, or change the Bidding Requirements or the proposed Contract Documents.

2. Agreement—The written instrument which is evidence of the agreement between Owner and Contractor covering the Work.

3. Application for Payment—The form acceptable to Engineer which is to be used by Contractor during the course of the Work in requesting progress or final payments and which is to be accompanied by such supporting documentation as is required by the Contract Documents.

4. Asbestos—Any material that contains more than one percent asbestos and is friable or is releasing asbestos fibers into the air above current action levels established by the United States Occupational Safety and Health Administration.

5. Bid—The offer or proposal of a Bidder submitted on the prescribed form setting forth the prices for the Work to be performed.

6. Bidder—The individual or entity who submits a Bid directly to Owner.

7. Bidding Documents—The Bidding Requirements and the proposed Contract Documents (including all Addenda).

8. Bidding Requirements—The advertisement or invitation to bid, Instructions to Bidders, Bid security of acceptable form, if any, and the Bid Form with any supplements.

9. Change Order—A document recommended by Engineer which is signed by Contractor and Owner and authorizes an addition, deletion, or revision in the Work or an adjustment in the Contract Price or the Contract Times, issued on or after the Effective Date of the Agreement.

Attachment: Holly Hill LS_13 Rehabilitation_Bid Set Specifications_04.30.19 (2019-R-38 : Lift Station #13 Rehabilitation)

Copyright © 2007 National Society of Professional Engineers for EJCDC. All rights reserved.

10. Claim—A demand or assertion by Owner or Contractor seeking an adjustment of Contract Price or Contract Times, or both, or other relief with respect to the terms of the Contract. A demand for money or services by a third party is not a Claim.

11. Contract—The entire and integrated written agreement between the Owner and Contractor concerning the Work. The Contract supersedes prior negotiations, representations, or agreements, whether written or oral.

12. Contract Documents—Those items so designated in the Agreement. Only printed or hard copies of the items listed in the Agreement are Contract Documents. Approved Shop Drawings, other Contractor submittals, and the reports and drawings of subsurface and physical conditions are not Contract Documents.

13. Contract Price—The moneys payable by Owner to Contractor for completion of the Work in accordance with the Contract Documents as stated in the Agreement (subject to the provisions of Paragraph 11.03 in the case of Unit Price Work).

14. Contract Times—The number of days or the dates stated in the Agreement to: (i) achieve Milestones, if any; (ii) achieve Substantial Completion; and (iii) complete the Work so that it is ready for final payment as evidenced by Engineer's written recommendation of final payment.

15. Contractor—The individual or entity with whom Owner has entered into the Agreement.

16. Cost of the Work—See Paragraph 11.01 for definition.

17. Drawings—That part of the Contract Documents prepared or approved by Engineer which graphically shows the scope, extent, and character of the Work to be performed by Contractor. Shop Drawings and other Contractor submittals are not Drawings as so defined.

18. Effective Date of the Agreement—The date indicated in the Agreement on which it becomes effective, but if no such date is indicated, it means the date on which the Agreement is signed and delivered by the last of the two parties to sign and deliver.

19. Engineer—The individual or entity named as such in the Agreement.

20. Field Order—A written order issued by Engineer which requires minor changes in the Work but which does not involve a change in the Contract Price or the Contract Times.

21. General Requirements—Sections of Division 1 of the Specifications.

Attachment: Holly Hill LS_13 Rehabilitation_Bid Set Specifications_04.30.19 (2019-R-38 : Lift Station #13 Rehabilitation)

Copyright © 2007 National Society of Professional Engineers for EJCDC. All rights reserved.

22. Hazardous Environmental Condition—The presence at the Site of Asbestos, PCBs, Petroleum, Hazardous Waste, or Radioactive Material in such quantities or circumstances that may present a substantial danger to persons or property exposed thereto.

23. Hazardous Waste—The term Hazardous Waste shall have the meaning provided in Section 1004 of the Solid Waste Disposal Act (42 USC Section 6903) as amended from time to time.

24. Laws and Regulations; Laws or Regulations—Any and all applicable laws, rules, regulations, ordinances, codes, and orders of any and all governmental bodies, agencies, authorities, and courts having jurisdiction.

25. Liens—Charges, security interests, or encumbrances upon Project funds, real property, or personal property.

26. Milestone—A principal event specified in the Contract Documents relating to an intermediate completion date or time prior to Substantial Completion of all the Work.

27. Notice of Award—The written notice by Owner to the Successful Bidder stating that upon timely compliance by the Successful Bidder with the conditions precedent listed therein, Owner will sign and deliver the Agreement.

28. Notice to Proceed—A written notice given by Owner to Contractor fixing the date on which the Contract Times will commence to run and on which Contractor shall start to perform the Work under the Contract Documents.

29. Owner—The individual or entity with whom Contractor has entered into the Agreement and for whom the Work is to be performed.

30. PCBs—Polychlorinated biphenyls.

31. Petroleum—Petroleum, including crude oil or any fraction thereof which is liquid at standard conditions of temperature and pressure (60 degrees Fahrenheit and 14.7 pounds per square inch absolute), such as oil, petroleum, fuel oil, oil sludge, oil refuse, gasoline, kerosene, and oil mixed with other non-Hazardous Waste and crude oils.

32. Progress Schedule—A schedule, prepared and maintained by Contractor, describing the sequence and duration of the activities comprising the Contractor's plan to accomplish the Work within the Contract Times.

33. Project—The total construction of which the Work to be performed under the Contract Documents may be the whole, or a part.

Attachment: Holly Hill LS_13 Rehabilitation_Bid Set Specifications_04.30.19 (2019-R-38 : Lift Station #13 Rehabilitation)

Copyright © 2007 National Society of Professional Engineers for EJCDC. All rights reserved.

34. Project Manual—The bound documentary information prepared for bidding and constructing the Work. A listing of the contents of the Project Manual, which may be bound in one or more volumes, is contained in the table(s) of contents.

35. Radioactive Material—Source, special nuclear, or byproduct material as defined by the Atomic Energy Act of 1954 (42 USC Section 2011 et seq.) as amended from time to time.

36. Resident Project Representative—The authorized representative of Engineer who may be assigned to the Site or any part thereof.

37. Samples—Physical examples of materials, equipment, or workmanship that are representative of some portion of the Work and which establish the standards by which such portion of the Work will be judged.

38. Schedule of Submittals—A schedule, prepared and maintained by Contractor, of required submittals and the time requirements to support scheduled performance of related construction activities.

39. Schedule of Values—A schedule, prepared and maintained by Contractor, allocating portions of the Contract Price to various portions of the Work and used as the basis for reviewing Contractor's Applications for Payment.

40. Shop Drawings—All drawings, diagrams, illustrations, schedules, and other data or information which are specifically prepared or assembled by or for Contractor and submitted by Contractor to illustrate some portion of the Work.

41. Site—Lands or areas indicated in the Contract Documents as being furnished by Owner upon which the Work is to be performed, including rights-of-way and easements for access thereto, and such other lands furnished by Owner which are designated for the use of Contractor.

42. Specifications—That part of the Contract Documents consisting of written requirements for materials, equipment, systems, standards and workmanship as applied to the Work, and certain administrative requirements and procedural matters applicable thereto.

43. Subcontractor—An individual or entity having a direct contract with Contractor or with any other Subcontractor for the performance of a part of the Work at the Site.

44. Substantial Completion—The time at which the Work (or a specified part thereof) has progressed to the point where, in the opinion of Engineer, the Work (or a specified part thereof) is sufficiently complete, in accordance with the Contract Documents, so that the Work (or a specified part thereof) can be utilized for the purposes for which it is intended. The terms "substantially complete" and

Attachment: Holly Hill LS_13 Rehabilitation_Bid Set Specifications_04.30.19 (2019-R-38 : Lift Station #13 Rehabilitation)

Copyright © 2007 National Society of Professional Engineers for EJCDC. All rights reserved.

"substantially completed" as applied to all or part of the Work refer to Substantial Completion thereof.

45. Successful Bidder—The Bidder submitting a responsive Bid to whom Owner makes an award.

46. Supplementary Conditions—That part of the Contract Documents which amends or supplements these General Conditions.

47. Supplier—A manufacturer, fabricator, supplier, distributor, material man, or vendor having a direct contract with Contractor or with any Subcontractor to furnish materials or equipment to be incorporated in the Work by Contractor or Subcontractor.

48. Underground Facilities—All underground pipelines, conduits, ducts, cables, wires, manholes, vaults, tanks, tunnels, or other such facilities or attachments, and any encasements containing such facilities, including those that convey electricity, gases, steam, liquid petroleum products, telephone or other communications, cable television, water, wastewater, storm water, other liquids or chemicals, or traffic or other control systems.

49. Unit Price Work—Work to be paid for on the basis of unit prices.

50. Work—The entire construction or the various separately identifiable parts thereof required to be provided under the Contract Documents. Work includes and is the result of performing or providing all labor, services, and documentation necessary to produce such construction, and furnishing, installing, and incorporating all materials and equipment into such construction, all as required by the Contract Documents.

51. Work Change Directive—A written statement to Contractor issued on or after the Effective Date of the Agreement and signed by Owner and recommended by Engineer ordering an addition, deletion, or revision in the Work, or responding to differing or unforeseen subsurface or physical conditions under which the Work is to be performed or to emergencies. A Work Change Directive will not change the Contract Price or the Contract Times but is evidence that the parties expect that the change ordered or documented by a Work Change Directive will be incorporated in a subsequently issued Change Order following negotiations by the parties as to its effect, if any, on the Contract Price or Contract Times.

1.02 *Terminology*

A. The words and terms discussed in Paragraph 1.02.B through F are not defined but, when used in the Bidding Requirements or Contract Documents, have the indicated meaning.

B. Intent of Certain Terms or Adjectives:

Attachment: Holly Hill LS_13 Rehabilitation_Bid Set Specifications_04.30.19 (2019-R-38 : Lift Station #13 Rehabilitation)

Copyright © 2007 National Society of Professional Engineers for EJCDC. All rights reserved.

1. The Contract Documents include the terms "as allowed," "as approved," "as ordered," "as directed" or terms of like effect or import to authorize an exercise of professional judgment by Engineer. In addition, the adjectives "reasonable," "suitable," "acceptable," "proper," "satisfactory," or adjectives of like effect or import are used to describe an action or determination of Engineer as to the Work. It is intended that such exercise of professional judgment, action, or determination will be solely to evaluate, in general, the Work for compliance with the information in the Contract Documents and with the design concept of the Project as a functioning whole as shown or indicated in the Contract Documents (unless there is a specific statement indicating otherwise). The use of any such term or adjective is not intended to and shall not be effective to assign to Engineer any duty or authority to supervise or direct the performance of the Work, or any duty or authority to undertake responsibility contrary to the provisions of Paragraph 9.09 or any other provision of the Contract Documents.

C. Day:

1. The word "day" means a calendar day of 24 hours measured from midnight to the next midnight.

D. Defective:

1. The word "defective," when modifying the word "Work," refers to Work that is unsatisfactory, faulty, or deficient in that it:

a. Does not conform to the Contract Documents; or

b. Does not meet the requirements of any applicable inspection, reference standard, test, or approval referred to in the Contract Documents; or

c. Has been damaged prior to Engineer's recommendation of final payment (unless responsibility for the protection thereof has been assumed by Owner at Substantial Completion in accordance with Paragraph 14.04 or 14.05).

E. Furnish, Install, Perform, And Provide:

1. The word "furnish," when used in connection with services, materials, or equipment, shall mean to supply and deliver said services, materials, or equipment to the Site (or some other specified location) ready for use or installation and in usable or operable condition.

2. The word "install," when used in connection with services, materials, or equipment, shall mean to put into use or place in final position said services, materials, or equipment complete and ready for intended use.

Attachment: Holly Hill LS_13 Rehabilitation_Bid Set Specifications_04.30.19 (2019-R-38 : Lift Station #13 Rehabilitation)

Copyright © 2007 National Society of Professional Engineers for EJCDC. All rights reserved.

3. The words "perform" or "provide," when used in connection with services, materials, or equipment, shall mean to furnish and install said services, materials, or equipment complete and ready for intended use.

4. When "furnish," "install," "perform," or "provide" is not used in connection with services, materials, or equipment in a context clearly requiring an obligation of Contractor, "provide" is implied.

F. Unless stated otherwise in the Contract Documents, words or phrases that have a well-known technical or construction industry or trade meaning are used in the Contract Documents in accordance with such recognized meaning.

ARTICLE 2 – PRELIMINARY MATTERS

2.01 *Delivery of Bonds and Evidence of Insurance*

A. When Contractor delivers the executed counterparts of the Agreement to Owner, Contractor shall also deliver to Owner such bonds as Contractor may be required to furnish.

B. Evidence of Insurance*:* Before any Work at the Site is started, Contractor and Owner shall each deliver to the other, with copies to each additional insured identified in the Supplementary Conditions, certificates of insurance (and other evidence of insurance which either of them or any additional insured may reasonably request) which Contractor and Owner respectively are required to purchase and maintain in accordance with Article 5.

2.02 *Copies of Documents*

A. Owner shall furnish to Contractor up to ten printed or hard copies of the Drawings and Project Manual. Additional copies will be furnished upon request at the cost of reproduction.

2.03 *Commencement of Contract Times; Notice to Proceed*

A. The Contract Times will commence to run on the thirtieth day after the Effective Date of the Agreement or, if a Notice to Proceed is given, on the day indicated in the Notice to Proceed. A Notice to Proceed may be given at any time within 30 days after the Effective Date of the Agreement. In no event will the Contract Times commence to run later than the sixtieth day after the day of Bid opening or the thirtieth day after the Effective Date of the Agreement, whichever date is earlier.

2.04 *Starting the Work*

A. Contractor shall start to perform the Work on the date when the Contract Times commence to run. No Work shall be done at the Site prior to the date on which the Contract Times commence to run.

Attachment: Holly Hill LS_13 Rehabilitation_Bid Set Specifications_04.30.19 (2019-R-38 : Lift Station #13 Rehabilitation)

Copyright © 2007 National Society of Professional Engineers for EJCDC. All rights reserved.

2.05 *Before Starting Construction*

A. Preliminary Schedules*:* Within 10 days after the Effective Date of the Agreement (unless otherwise specified in the General Requirements), Contractor shall submit to Engineer for timely review:

1. A preliminary Progress Schedule indicating the times (numbers of days or dates) for starting and completing the various stages of the Work, including any Milestones specified in the Contract Documents;

2. A preliminary Schedule of Submittals; and

3. A preliminary Schedule of Values for all of the Work which includes quantities and prices of items which when added together equal the Contract Price and subdivides the Work into component parts in sufficient detail to serve as the basis for progress payments during performance of the Work. Such prices will include an appropriate amount of overhead and profit applicable to each item of Work.

2.06 *Preconstruction Conference; Designation of Authorized Representatives*

A. Before any Work at the Site is started, a conference attended by Owner, Contractor, Engineer, and others as appropriate will be held to establish a working understanding among the parties as to the Work and to discuss the schedules referred to in Paragraph 2.05.A, procedures for handling Shop Drawings and other submittals, processing Applications for Payment, and maintaining required records.

B. At this conference Owner and Contractor each shall designate, in writing, a specific individual to act as its authorized representative with respect to the services and responsibilities under the Contract. Such individuals shall have the authority to transmit instructions, receive information, render decisions relative to the Contract, and otherwise act on behalf of each respective party.

2.07 *Initial Acceptance of Schedules*

A. At least 10 days before submission of the first Application for Payment a conference attended by Contractor, Engineer, and others as appropriate will be held to review for acceptability to Engineer as provided below the schedules submitted in accordance with Paragraph 2.05.A. Contractor shall have an additional 10 days to make corrections and adjustments and to complete and resubmit the schedules. No progress payment shall be made to Contractor until acceptable schedules are submitted to Engineer.

1. The Progress Schedule will be acceptable to Engineer if it provides an orderly progression of the Work to completion within the Contract Times. Such acceptance will not impose on Engineer responsibility for the Progress Schedule, for

Attachment: Holly Hill LS_13 Rehabilitation_Bid Set Specifications_04.30.19 (2019-R-38 : Lift Station #13 Rehabilitation)

Copyright © 2007 National Society of Professional Engineers for EJCDC. All rights reserved.

sequencing, scheduling, or progress of the Work, nor interfere with or relieve Contractor from Contractor's full responsibility therefore.

2. Contractor's Schedule of Submittals will be acceptable to Engineer if it provides a workable arrangement for reviewing and processing the required submittals.

3. Contractor's Schedule of Values will be acceptable to Engineer as to form and substance if it provides a reasonable allocation of the Contract Price to component parts of the Work.

ARTICLE 3 – CONTRACT DOCUMENTS: INTENT, AMENDING, REUSE

3.01 *Intent*

A. The Contract Documents are complementary; what is required by one is as binding as if required by all.

B. It is the intent of the Contract Documents to describe a functionally complete project (or part thereof) to be constructed in accordance with the Contract Documents. Any labor, documentation, services, materials, or equipment that reasonably may be inferred from the Contract Documents or from prevailing custom or trade usage as being required to produce the indicated result will be provided whether or not specifically called for, at no additional cost to Owner.

C. Clarifications and interpretations of the Contract Documents shall be issued by Engineer as provided in Article 9.

3.02 *Reference Standards*

A. Standards, Specifications, Codes, Laws, and Regulations

1. Reference to standards, specifications, manuals, or codes of any technical society, organization, or association, or to Laws or Regulations, whether such reference be specific or by implication, shall mean the standard, specification, manual, code, or Laws or Regulations in effect at the time of opening of Bids (or on the Effective Date of the Agreement if there were no Bids), except as may be otherwise specifically stated in the Contract Documents.

2. No provision of any such standard, specification, manual, or code, or any instruction of a Supplier, shall be effective to change the duties or responsibilities of Owner, Contractor, or Engineer, or any of their subcontractors, consultants, agents, or employees, from those set forth in the Contract Documents. No such provision or instruction shall be effective to assign to Owner, Engineer, or any of their officers, directors, members, partners, employees, agents, consultants, or subcontractors, any duty or authority to supervise or direct the performance of the Work or any duty or

Attachment: Holly Hill LS_13 Rehabilitation_Bid Set Specifications_04.30.19 (2019-R-38 : Lift Station #13 Rehabilitation)

Copyright © 2007 National Society of Professional Engineers for EJCDC. All rights reserved.

authority to undertake responsibility inconsistent with the provisions of the Contract Documents.

3.03 *Reporting and Resolving Discrepancies*

A. Reporting Discrepancies:

1. Contractor's Review of Contract Documents Before Starting Work: Before undertaking each part of the Work, Contractor shall carefully study and compare the Contract Documents and check and verify pertinent figures therein and all applicable field measurements. Contractor shall promptly report in writing to Engineer any conflict, error, ambiguity, or discrepancy which Contractor discovers, or has actual knowledge of, and shall obtain a written interpretation or clarification from Engineer before proceeding with any Work affected thereby.

2. Contractor's Review of Contract Documents During Performance of Work: If, during the performance of the Work, Contractor discovers any conflict, error, ambiguity, or discrepancy within the Contract Documents, or between the Contract Documents and (a) any applicable Law or Regulation, (b) any standard, specification, manual, or code, or (c) any instruction of any Supplier, then Contractor shall promptly report it to Engineer in writing. Contractor shall not proceed with the Work affected thereby (except in an emergency as required by Paragraph 6.16.A) until an amendment or supplement to the Contract Documents has been issued by one of the methods indicated in Paragraph 3.04.

3. Contractor shall not be liable to Owner or Engineer for failure to report any conflict, error, ambiguity, or discrepancy in the Contract Documents unless Contractor had actual knowledge thereof.

B. Resolving Discrepancies:

1. Except as may be otherwise specifically stated in the Contract Documents, the provisions of the Contract Documents shall take precedence in resolving any conflict, error, ambiguity, or discrepancy between the provisions of the Contract Documents and:

a. The provisions of any standard, specification, manual, or code, or the instruction of any Supplier (whether or not specifically incorporated by reference in the Contract Documents); or

b. The provisions of any Laws or Regulations applicable to the performance of the Work (unless such an interpretation of the provisions of the Contract Documents would result in violation of such Law or Regulation).

Attachment: Holly Hill LS_13 Rehabilitation_Bid Set Specifications_04.30.19 (2019-R-38 : Lift Station #13 Rehabilitation)

Copyright © 2007 National Society of Professional Engineers for EJCDC. All rights reserved.

3.04 *Amending and Supplementing Contract Documents*

A. The Contract Documents may be amended to provide for additions, deletions, and revisions in the Work or to modify the terms and conditions thereof by either a Change Order or a Work Change Directive.

B. The requirements of the Contract Documents may be supplemented and minor variations and deviations in the Work may be authorized, by one or more of the following ways:

1. A Field Order;

2. Engineer's approval of a Shop Drawing or Sample (subject to the provisions of Paragraph 6.17.D.3); or

3. Engineer's written interpretation or clarification.

3.05 *Reuse of Documents*

A. Contractor and any Subcontractor or Supplier shall not:

1. Have or acquire any title to or ownership rights in any of the Drawings, Specifications, or other documents (or copies of any thereof) prepared by or bearing the seal of Engineer or its consultants, including electronic media editions; or

2. Reuse any such Drawings, Specifications, other documents, or copies thereof on extensions of the Project or any other project without written consent of Owner and Engineer and specific written verification or adaptation by Engineer.

B. The prohibitions of this Paragraph 3.05 will survive final payment, or termination of the Contract. Nothing herein shall preclude Contractor from retaining copies of the Contract Documents for record purposes.

3.06 *Electronic Data*

A. Unless otherwise stated in the Supplementary Conditions, the data furnished by Owner or Engineer to Contractor, or by Contractor to Owner or Engineer, that may be relied upon are limited to the printed copies (also known as hard copies). Files in electronic media format of text, data, graphics, or other types are furnished only for the convenience of the receiving party. Any conclusion or information obtained or derived from such electronic files will be at the user's sole risk. If there is a discrepancy between the electronic files and the hard copies, the hard copies govern.

B. Because data stored in electronic media format can deteriorate or be modified inadvertently or otherwise without authorization of the data's creator, the party receiving electronic files agrees that it will perform acceptance tests or procedures within 60 days, after which the

Attachment: Holly Hill LS_13 Rehabilitation_Bid Set Specifications_04.30.19 (2019-R-38 : Lift Station #13 Rehabilitation)

Copyright © 2007 National Society of Professional Engineers for EJCDC. All rights reserved.

receiving party shall be deemed to have accepted the data thus transferred. Any errors detected within the 60-day acceptance period will be corrected by the transferring party.

C. When transferring documents in electronic media format, the transferring party makes no representations as to long term compatibility, usability, or readability of documents resulting from the use of software application packages, operating systems, or computer hardware differing from those used by the data's creator.

ARTICLE 4 – AVAILABILITY OF LANDS; SUBSURFACE AND PHYSICAL CONDITIONS; HAZARDOUS ENVIRONMENTAL CONDITIONS; REFERENCE POINTS

4.01 *Availability of Lands*

A. Owner shall furnish the Site. Owner shall notify Contractor of any encumbrances or restrictions not of general application but specifically related to use of the Site with which Contractor must comply in performing the Work. Owner will obtain in a timely manner and pay for easements for permanent structures or permanent changes in existing facilities. If Contractor and Owner are unable to agree on entitlement to or on the amount or extent, if any, of any adjustment in the Contract Price or Contract Times, or both, as a result of any delay in Owner's furnishing the Site or a part thereof, Contractor may make a Claim therefore as provided in Paragraph 10.05.

B. Upon reasonable written request, Owner shall furnish Contractor with a current statement of record legal title and legal description of the lands upon which the Work is to be performed and Owner's interest therein as necessary for giving notice of or filing a mechanic's or construction lien against such lands in accordance with applicable Laws and Regulations.

C. Contractor shall provide for all additional lands and access thereto that may be required for temporary construction facilities or storage of materials and equipment.

4.02 *Subsurface and Physical Conditions*

A. Reports and Drawings: The Supplementary Conditions identify:

1. Those reports known to Owner of explorations and tests of subsurface conditions at or contiguous to the Site; and

2. Those drawings known to Owner of physical conditions relating to existing surface or subsurface structures at the Site (except Underground Facilities).

B. Limited Reliance by Contractor on Technical Data Authorized: Contractor may rely upon the accuracy of the "technical data" contained in such reports and drawings, but such reports and drawings are not Contract Documents. Such "technical data" is identified in the Supplementary Conditions. Except for such reliance on such "technical data," Contractor may not rely upon or make any claim against Owner or Engineer, or any of their officers,

Attachment: Holly Hill LS_13 Rehabilitation_Bid Set Specifications_04.30.19 (2019-R-38 : Lift Station #13 Rehabilitation)

Copyright © 2007 National Society of Professional Engineers for EJCDC. All rights reserved.

directors, members, partners, employees, agents, consultants, or subcontractors with respect to:

1. The completeness of such reports and drawings for Contractor's purposes, including, but not limited to, any aspects of the means, methods, techniques, sequences, and procedures of construction to be employed by Contractor, and safety precautions and programs incident thereto; or

2. Other data, interpretations, opinions, and information contained in such reports or shown or indicated in such drawings; or

3. Any Contractor interpretation of or conclusion drawn from any "technical data" or any such other data, interpretations, opinions, or information.

4.03 *Differing Subsurface or Physical Conditions*

A. Notice*:* If Contractor believes that any subsurface or physical condition that is uncovered or revealed either:

1. Is of such a nature as to establish that any "technical data" on which Contractor is entitled to rely as provided in Paragraph 4.02 is materially inaccurate; or

2. Is of such a nature as to require a change in the Contract Documents; or

3. Differs materially from that shown or indicated in the Contract Documents; or

4. Is of an unusual nature, and differs materially from conditions ordinarily encountered and generally recognized as inherent in work of the character provided for in the Contract Documents;

5. Then Contractor shall, promptly after becoming aware thereof and before further disturbing the subsurface or physical conditions or performing any Work in connection therewith (except in an emergency as required by Paragraph 6.16.A), notify Owner and Engineer in writing about such condition. Contractor shall not further disturb such condition or perform any Work in connection therewith (except as aforesaid) until receipt of written order to do so.

B. Engineer's Review: After receipt of written notice as required by Paragraph 4.03.A, Engineer will promptly review the pertinent condition, determine the necessity of Owner's obtaining additional exploration or tests with respect thereto, and advise Owner in writing (with a copy to Contractor) of Engineer's findings and conclusions.

C. Possible Price and Times Adjustments:

Attachment: Holly Hill LS_13 Rehabilitation_Bid Set Specifications_04.30.19 (2019-R-38 : Lift Station #13 Rehabilitation)

Copyright © 2007 National Society of Professional Engineers for EJCDC. All rights reserved.

1. The Contract Price or the Contract Times, or both, will be equitably adjusted to the extent that the existence of such differing subsurface or physical condition causes an increase or decrease in Contractor's cost of, or time required for, performance of the Work; subject, however, to the following:

   a. Such condition must meet any one or more of the categories described in Paragraph 4.03.A; and

   b. With respect to Work that is paid for on a unit price basis, any adjustment in Contract Price will be subject to the provisions of Paragraphs 9.07 and 11.03.

2. Contractor shall not be entitled to any adjustment in the Contract Price or Contract Times if:

   a. Contractor knew of the existence of such conditions at the time Contractor made a final commitment to Owner with respect to Contract Price and Contract Times by the submission of a Bid or becoming bound under a negotiated contract; or

   b. The existence of such condition could reasonably have been discovered or revealed as a result of any examination, investigation, exploration, test, or study of the Site and contiguous areas required by the Bidding Requirements or Contract Documents to be conducted by or for Contractor prior to Contractor's making such final commitment; or

   c. Contractor failed to give the written notice as required by Paragraph 4.03.A.

3. If Owner and Contractor are unable to agree on entitlement to or on the amount or extent, if any, of any adjustment in the Contract Price or Contract Times, or both, a Claim may be made therefore as provided in Paragraph 10.05. However, neither Owner or Engineer, or any of their officers, directors, members, partners, employees, agents, consultants, or subcontractors shall be liable to Contractor for any claims, costs, losses, or damages (including but not limited to all fees and charges of engineers, architects, attorneys, and other professionals and all court or arbitration or other dispute resolution costs) sustained by Contractor on or in connection with any other project or anticipated project.

4.04 *Underground Facilities*

A. Shown or Indicated: The information and data shown or indicated in the Contract Documents with respect to existing Underground Facilities at or contiguous to the Site is based on information and data furnished to Owner or Engineer by the owners of such Underground Facilities, including Owner, or by others. Unless it is otherwise expressly provided in the Supplementary Conditions:

Attachment: Holly Hill LS_13 Rehabilitation_Bid Set Specifications_04.30.19 (2019-R-38 : Lift Station #13 Rehabilitation)

Copyright © 2007 National Society of Professional Engineers for EJCDC. All rights reserved.

1. Owner and Engineer shall not be responsible for the accuracy or completeness of any such information or data provided by others; and

2. The cost of all of the following will be included in the Contract Price, and Contractor shall have full responsibility for:

   a. Reviewing and checking all such information and data;

   b. Locating all Underground Facilities shown or indicated in the Contract Documents;

   c. Coordination of the Work with the owners of such Underground Facilities, including Owner, during construction; and

   d. The safety and protection of all such Underground Facilities and repairing any damage thereto resulting from the Work.

B. Not Shown or Indicated:

1. If an Underground Facility is uncovered or revealed at or contiguous to the Site which was not shown or indicated, or not shown or indicated with reasonable accuracy in the Contract Documents, Contractor shall, promptly after becoming aware thereof and before further disturbing conditions affected thereby or performing any Work in connection therewith (except in an emergency as required by Paragraph 6.16.A), identify the owner of such Underground Facility and give written notice to that owner and to Owner and Engineer. Engineer will promptly review the Underground Facility and determine the extent, if any, to which a change is required in the Contract Documents to reflect and document the consequences of the existence or location of the Underground Facility. During such time, Contractor shall be responsible for the safety and protection of such Underground Facility.

2. If Engineer concludes that a change in the Contract Documents is required, a Work Change Directive or a Change Order will be issued to reflect and document such consequences. An equitable adjustment shall be made in the Contract Price or Contract Times, or both, to the extent that they are attributable to the existence or location of any Underground Facility that was not shown or indicated or not shown or indicated with reasonable accuracy in the Contract Documents and that Contractor did not know of and could not reasonably have been expected to be aware of or to have anticipated. If Owner and Contractor are unable to agree on entitlement to or on the amount or extent, if any, of any such adjustment in Contract Price or Contract Times, Owner or Contractor may make a Claim therefore as provided in Paragraph 10.05.

Attachment: Holly Hill LS_13 Rehabilitation_Bid Set Specifications_04.30.19 (2019-R-38 : Lift Station #13 Rehabilitation)

Copyright © 2007 National Society of Professional Engineers for EJCDC. All rights reserved.

4.05 *Reference Points*

A. Owner shall provide engineering surveys to establish reference points for construction which in Engineer's judgment are necessary to enable Contractor to proceed with the Work. Contractor shall be responsible for laying out the Work, shall protect and preserve the established reference points and property monuments, and shall make no changes or relocations without the prior written approval of Owner. Contractor shall report to Engineer whenever any reference point or property monument is lost or destroyed or requires relocation because of necessary changes in grades or locations, and shall be responsible for the accurate replacement or relocation of such reference points or property monuments by professionally qualified personnel.

4.06 *Hazardous Environmental Condition at Site*

A. Reports and Drawings: The Supplementary Conditions identify those reports and drawings known to Owner relating to Hazardous Environmental Conditions that have been identified at the Site.

B. Limited Reliance by Contractor on Technical Data Authorized: Contractor may rely upon the accuracy of the "technical data" contained in such reports and drawings, but such reports and drawings are not Contract Documents. Such "technical data" is identified in the Supplementary Conditions. Except for such reliance on such "technical data," Contractor may not rely upon or make any claim against Owner or Engineer, or any of their officers, directors, members, partners, employees, agents, consultants, or subcontractors with respect to:

1. The completeness of such reports and drawings for Contractor's purposes, including, but not limited to, any aspects of the means, methods, techniques, sequences and procedures of construction to be employed by Contractor and safety precautions and programs incident thereto; or

2. Other data, interpretations, opinions and information contained in such reports or shown or indicated in such drawings; or

3. Any Contractor interpretation of or conclusion drawn from any "technical data" or any such other data, interpretations, opinions or information.

C. Contractor shall not be responsible for any Hazardous Environmental Condition uncovered or revealed at the Site which was not shown or indicated in Drawings or Specifications or identified in the Contract Documents to be within the scope of the Work. Contractor shall be responsible for a Hazardous Environmental Condition created with any materials brought to the Site by Contractor, Subcontractors, Suppliers, or anyone else for whom Contractor is responsible.

D. If Contractor encounters a Hazardous Environmental Condition or if Contractor or anyone for whom Contractor is responsible creates a Hazardous Environmental Condition,

Attachment: Holly Hill LS_13 Rehabilitation_Bid Set Specifications_04.30.19 (2019-R-38 : Lift Station #13 Rehabilitation)

Copyright © 2007 National Society of Professional Engineers for EJCDC. All rights reserved.

Contractor shall immediately: (i) secure or otherwise isolate such condition; (ii) stop all Work in connection with such condition and in any area affected thereby (except in an emergency as required by Paragraph 6.16.A); and (iii) notify Owner and Engineer (and promptly thereafter confirm such notice in writing). Owner shall promptly consult with Engineer concerning the necessity for Owner to retain a qualified expert to evaluate such condition or take corrective action, if any. Promptly after consulting with Engineer, Owner shall take such actions as are necessary to permit Owner to timely obtain required permits and provide Contractor the written notice required by Paragraph 4.06.E.

E. Contractor shall not be required to resume Work in connection with such condition or in any affected area until after Owner has obtained any required permits related thereto and delivered written notice to Contractor: (i) specifying that such condition and any affected area is or has been rendered safe for the resumption of Work; or (ii) specifying any special conditions under which such Work may be resumed safely. If Owner and Contractor cannot agree as to entitlement to or on the amount or extent, if any, of any adjustment in Contract Price or Contract Times, or both, as a result of such Work stoppage or such special conditions under which Work is agreed to be resumed by Contractor, either party may make a Claim therefore as provided in Paragraph 10.05.

F. If after receipt of such written notice Contractor does not agree to resume such Work based on a reasonable belief it is unsafe, or does not agree to resume such Work under such special conditions, then Owner may order the portion of the Work that is in the area affected by such condition to be deleted from the Work. If Owner and Contractor cannot agree as to entitlement to or on the amount or extent, if any, of an adjustment in Contract Price or Contract Times as a result of deleting such portion of the Work, then either party may make a Claim therefore as provided in Paragraph 10.05. Owner may have such deleted portion of the Work performed by Owner's own forces or others in accordance with Article 7.

G. To the fullest extent permitted by Laws and Regulations, Owner shall indemnify and hold harmless Contractor, Subcontractors, and Engineer, and the officers, directors, members, partners, employees, agents, consultants, and subcontractors of each and any of them from and against all claims, costs, losses, and damages (including but not limited to all fees and charges of engineers, architects, attorneys, and other professionals and all court or arbitration or other dispute resolution costs) arising out of or relating to a Hazardous Environmental Condition, provided that such Hazardous Environmental Condition: (i) was not shown or indicated in the Drawings or Specifications or identified in the Contract Documents to be included within the scope of the Work, and (ii) was not created by Contractor or by anyone for whom Contractor is responsible. Nothing in this Paragraph 4.06.G shall obligate Owner to indemnify any individual or entity from and against the consequences of that individual's or entity's own negligence.

H. To the fullest extent permitted by Laws and Regulations, Contractor shall indemnify and hold harmless Owner and Engineer, and the officers, directors, members, partners, employees, agents, consultants, and subcontractors of each and any of them from and

Attachment: Holly Hill LS_13 Rehabilitation_Bid Set Specifications_04.30.19 (2019-R-38 : Lift Station #13 Rehabilitation)

Copyright © 2007 National Society of Professional Engineers for EJCDC. All rights reserved.

against all claims, costs, losses, and damages (including but not limited to all fees and charges of engineers, architects, attorneys, and other professionals and all court or arbitration or other dispute resolution costs) arising out of or relating to a Hazardous Environmental Condition created by Contractor or by anyone for whom Contractor is responsible. Nothing in this Paragraph 4.06.H shall obligate Contractor to indemnify any individual or entity from and against the consequences of that individual's or entity's own negligence.

I. The provisions of Paragraphs 4.02, 4.03, and 4.04 do not apply to a Hazardous Environmental Condition uncovered or revealed at the Site.

ARTICLE 5 – BONDS AND INSURANCE

5.01 *Performance, Payment, and Other Bonds*

A. Contractor shall furnish performance and payment bonds, each in an amount at least equal to the Contract Price as security for the faithful performance and payment of all of Contractor's obligations under the Contract Documents. These bonds shall remain in effect until one year after the date when final payment becomes due or until completion of the correction period specified in Paragraph 13.07, whichever is later, except as provided otherwise by Laws or Regulations or by the Contract Documents. Contractor shall also furnish such other bonds as are required by the Contract Documents.

B. All bonds shall be in the form prescribed by the Contract Documents except as provided otherwise by Laws or Regulations, and shall be executed by such sureties as are named in the list of "Companies Holding Certificates of Authority as Acceptable Sureties on Federal Bonds and as Acceptable Reinsuring Companies" as published in Circular 570 (amended) by the Financial Management Service, Surety Bond Branch, U.S. Department of the Treasury. All bonds signed by an agent or attorney-in-fact must be accompanied by a certified copy of that individual's authority to bind the surety. The evidence of authority shall show that it is effective on the date the agent or attorney-in-fact signed each bond.

C. If the surety on any bond furnished by Contractor is declared bankrupt or becomes insolvent or its right to do business is terminated in any state where any part of the Project is located or it ceases to meet the requirements of Paragraph 5.01.B, Contractor shall promptly notify Owner and Engineer and shall, within 20 days after the event giving rise to such notification, provide another bond and surety, both of which shall comply with the requirements of Paragraphs 5.01.B and 5.02.

Attachment: Holly Hill LS_13 Rehabilitation_Bid Set Specifications_04.30.19 (2019-R-38 : Lift Station #13 Rehabilitation)

Copyright © 2007 National Society of Professional Engineers for EJCDC. All rights reserved.

5.02 *Licensed Sureties and Insurers*

A. All bonds and insurance required by the Contract Documents to be purchased and maintained by Owner or Contractor shall be obtained from surety or insurance companies that are duly licensed or authorized in the jurisdiction in which the Project is located to issue bonds or insurance policies for the limits and coverage so required. Such surety and insurance companies shall also meet such additional requirements and qualifications as may be provided in the Supplementary Conditions.

5.03 *Certificates of Insurance*

A. Contractor shall deliver to Owner, with copies to each additional insured and loss payee identified in the Supplementary Conditions, certificates of insurance (and other evidence of insurance requested by Owner or any other additional insured) which Contractor is required to purchase and maintain.

B. Owner shall deliver to Contractor, with copies to each additional insured and loss payee identified in the Supplementary Conditions, certificates of insurance (and other evidence of insurance requested by Contractor or any other additional insured) which Owner is required to purchase and maintain.

C. Failure of Owner to demand such certificates or other evidence of Contractor's full compliance with these insurance requirements or failure of Owner to identify a deficiency in compliance from the evidence provided shall not be construed as a waiver of Contractor's obligation to maintain such insurance.

E. Owner does not represent that insurance coverage and limits established in this Contract necessarily will be adequate to protect Contractor.

F. The insurance and insurance limits required herein shall not be deemed as a limitation on Contractor's liability under the indemnities granted to Owner in the Contract Documents.

5.04 *Contractor's Insurance*

A. Contractor shall purchase and maintain such insurance as is appropriate for the Work being performed and as will provide protection from claims set forth below which may arise out of or result from Contractor's performance of the Work and Contractor's other obligations under the Contract Documents, whether it is to be performed by Contractor, any Subcontractor or Supplier, or by anyone directly or indirectly employed by any of them to perform any of the Work, or by anyone for whose acts any of them may be liable:

1. Claims under workers' compensation, disability benefits, and other similar employee benefit acts;

Attachment: Holly Hill LS_13 Rehabilitation_Bid Set Specifications_04.30.19 (2019-R-38 : Lift Station #13 Rehabilitation)

Copyright © 2007 National Society of Professional Engineers for EJCDC. All rights reserved.

2. Claims for damages because of bodily injury, occupational sickness or disease, or death of Contractor's employees;

3. Claims for damages because of bodily injury, sickness or disease, or death of any person other than Contractor's employees;

4. Claims for damages insured by reasonably available personal injury liability coverage which are sustained:

   a. By any person as a result of an offense directly or indirectly related to the employment of such person by Contractor, or

   b. By any other person for any other reason;

5. Claims for damages, other than to the Work itself, because of injury to or destruction of tangible property wherever located, including loss of use resulting there from; and

6. Claims for damages because of bodily injury or death of any person or property damage arising out of the ownership, maintenance or use of any motor vehicle.

B. The policies of insurance required by this Paragraph 5.04 shall:

1. With respect to insurance required by Paragraphs 5.04.A.3 through 5.04.A.6 inclusive, be written on an occurrence basis, include as additional insureds (subject to any customary exclusion regarding professional liability) Owner and Engineer, and any other individuals or entities identified in the Supplementary Conditions, all of whom shall be listed as additional insureds, and include coverage for the respective officers, directors, members, partners, employees, agents, consultants, and subcontractors of each and any of all such additional insureds, and the insurance afforded to these additional insureds shall provide primary coverage for all claims covered thereby;

2. Include at least the specific coverage and be written for not less than the limits of liability provided in the Supplementary Conditions or required by Laws or Regulations, whichever is greater;

3. Include contractual liability insurance covering Contractor's indemnity obligations under Paragraphs 6.11 and 6.20;

4. Contain a provision or endorsement that the coverage afforded will not be canceled, materially changed or renewal refused until at least 30 days prior written notice has been given to Owner and Contractor and to each other additional insured identified in the Supplementary Conditions to whom a certificate of insurance has been issued

Attachment: Holly Hill LS_13 Rehabilitation_Bid Set Specifications_04.30.19 (2019-R-38 : Lift Station #13 Rehabilitation)

Copyright © 2007 National Society of Professional Engineers for EJCDC. All rights reserved.

(and the certificates of insurance furnished by the Contractor pursuant to Paragraph 5.03 will so provide);

5. Remain in effect at least until final payment and at all times thereafter when Contractor may be correcting, removing, or replacing defective Work in accordance with Paragraph 13.07; and

6. Include completed operations coverage:

a. Such insurance shall remain in effect for two years after final payment.

b. Contractor shall furnish Owner and each other additional insured identified in the Supplementary Conditions, to whom a certificate of insurance has been issued, evidence satisfactory to Owner and any such additional insured of continuation of such insurance at final payment and one year thereafter.

5.05 *Owner's Liability Insurance*

A. In addition to the insurance required to be provided by Contractor under Paragraph 5.04, Owner, at Owner's option, may purchase and maintain at Owner's expense Owner's own liability insurance as will protect Owner against claims which may arise from operations under the Contract Documents.

5.06 *Property Insurance*

A. Unless otherwise provided in the Supplementary Conditions, Owner shall purchase and maintain property insurance upon the Work at the Site in the amount of the full replacement cost thereof (subject to such deductible amounts as may be provided in the Supplementary Conditions or required by Laws and Regulations). This insurance shall:

1. Include the interests of Owner, Contractor, Subcontractors, and Engineer, and any other individuals or entities identified in the Supplementary Conditions, and the officers, directors, members, partners, employees, agents, consultants, and subcontractors of each and any of them, each of whom is deemed to have an insurable interest and shall be listed as a loss payee;

2. Be written on a Builder's Risk "all-risk" policy form that shall at least include insurance for physical loss or damage to the Work, temporary buildings, false work, and materials and equipment in transit, and shall insure against at least the following perils or causes of loss: fire, lightning, extended coverage, theft, vandalism and malicious mischief, earthquake, collapse, debris removal, demolition occasioned by enforcement of Laws and Regulations, water damage (other than that caused by flood), and such other perils or causes of loss as may be specifically required by the Supplementary Conditions.

Attachment: Holly Hill LS_13 Rehabilitation_Bid Set Specifications_04.30.19 (2019-R-38 : Lift Station #13 Rehabilitation)

Copyright © 2007 National Society of Professional Engineers for EJCDC. All rights reserved.

3. Include expenses incurred in the repair or replacement of any insured property (including but not limited to fees and charges of engineers and architects);

4. Cover materials and equipment stored at the Site or at another location that was agreed to in writing by Owner prior to being incorporated in the Work, provided that such materials and equipment have been included in an Application for Payment recommended by Engineer;

5. Allow for partial utilization of the Work by Owner;

6. Include testing and startup; and

7. Be maintained in effect until final payment is made unless otherwise agreed to in writing by Owner, Contractor, and Engineer with 30 days written notice to each other loss payee to whom a certificate of insurance has been issued.

B. Owner shall purchase and maintain such equipment breakdown insurance or additional property insurance as may be required by the Supplementary Conditions or Laws and Regulations which will include the interests of Owner, Contractor, Subcontractors, and Engineer, and any other individuals or entities identified in the Supplementary Conditions, and the officers, directors, members, partners, employees, agents, consultants and subcontractors of each and any of them, each of whom is deemed to have an insurable interest and shall be listed as a loss payee.

C. All the policies of insurance (and the certificates or other evidence thereof) required to be purchased and maintained in accordance with this Paragraph 5.06 will contain a provision or endorsement that the coverage afforded will not be canceled or materially changed or renewal refused until at least 30 days prior written notice has been given to Owner and Contractor and to each other loss payee to whom a certificate of insurance has been issued and will contain waiver provisions in accordance with Paragraph 5.07.

D. Owner shall not be responsible for purchasing and maintaining any property insurance specified in this Paragraph 5.06 to protect the interests of Contractor, Subcontractors, or others in the Work to the extent of any deductible amounts that are identified in the Supplementary Conditions. The risk of loss within such identified deductible amount will be borne by Contractor, Subcontractors, or others suffering any such loss, and if any of them wishes property insurance coverage within the limits of such amounts, each may purchase and maintain it at the purchaser's own expense.

E. If Contractor requests in writing that other special insurance be included in the property insurance policies provided under this Paragraph 5.06, Owner shall, if possible, include such insurance, and the cost thereof will be charged to Contractor by appropriate Change Order. Prior to commencement of the Work at the Site, Owner shall advise Contractor in writing whether or not such other insurance has been procured by Owner.

Attachment: Holly Hill LS_13 Rehabilitation_Bid Set Specifications_04.30.19 (2019-R-38 : Lift Station #13 Rehabilitation)

Copyright © 2007 National Society of Professional Engineers for EJCDC. All rights reserved.

5.07 *Waiver of Rights*

A. Owner and Contractor intend that all policies purchased in accordance with Paragraph 5.06 will protect Owner, Contractor, Subcontractors, and Engineer, and all other individuals or entities identified in the Supplementary Conditions as loss payees (and the officers, directors, members, partners, employees, agents, consultants, and subcontractors of each and any of them) in such policies and will provide primary coverage for all losses and damages caused by the perils or causes of loss covered thereby. All such policies shall contain provisions to the effect that in the event of payment of any loss or damage the insurers will have no rights of recovery against any of the insureds or loss payees there under. Owner and Contractor waive all rights against each other and their respective officers, directors, members, partners, employees, agents, consultants and subcontractors of each and any of them for all losses and damages caused by, arising out of or resulting from any of the perils or causes of loss covered by such policies and any other property insurance applicable to the Work; and, in addition, waive all such rights against Subcontractors and Engineer, and all other individuals or entities identified in the Supplementary Conditions as loss payees (and the officers, directors, members, partners, employees, agents, consultants, and subcontractors of each and any of them) under such policies for losses and damages so caused. None of the above waivers shall extend to the rights that any party making such waiver may have to the proceeds of insurance held by Owner as trustee or otherwise payable under any policy so issued.

B. Owner waives all rights against Contractor, Subcontractors, and Engineer, and the officers, directors, members, partners, employees, agents, consultants and subcontractors of each and any of them for:

1. Loss due to business interruption, loss of use, or other consequential loss extending beyond direct physical loss or damage to Owner's property or the Work caused by, arising out of, or resulting from fire or other perils whether or not insured by Owner; and

2. Loss or damage to the completed Project or part thereof caused by, arising out of, or resulting from fire or other insured peril or cause of loss covered by any property insurance maintained on the completed Project or part thereof by Owner during partial utilization pursuant to Paragraph 14.05, after Substantial Completion pursuant to Paragraph 14.04, or after final payment pursuant to Paragraph 14.07.

C. Any insurance policy maintained by Owner covering any loss, damage or consequential loss referred to in Paragraph 5.07.B shall contain provisions to the effect that in the event of payment of any such loss, damage, or consequential loss, the insurers will have no rights of recovery against Contractor, Subcontractors, or Engineer, and the officers, directors, members, partners, employees, agents, consultants and subcontractors of each and any of them.

Attachment: Holly Hill LS_13 Rehabilitation_Bid Set Specifications_04.30.19 (2019-R-38 : Lift Station #13 Rehabilitation)

Copyright © 2007 National Society of Professional Engineers for EJCDC. All rights reserved.

5.08 *Receipt and Application of Insurance Proceeds*

A. Any insured loss under the policies of insurance required by Paragraph 5.06 will be adjusted with Owner and made payable to Owner as fiduciary for the loss payees, as their interests may appear, subject to the requirements of any applicable mortgage clause and of Paragraph 5.08.B. Owner shall deposit in a separate account any money so received and shall distribute it in accordance with such agreement as the parties in interest may reach. If no other special agreement is reached, the damaged Work shall be repaired or replaced, the moneys so received applied on account thereof, and the Work and the cost thereof covered by an appropriate Change Order.

B. Owner as fiduciary shall have power to adjust and settle any loss with the insurers unless one of the parties in interest shall object in writing within 15 days after the occurrence of loss to Owner's exercise of this power. If such objection be made, Owner as fiduciary shall make settlement with the insurers in accordance with such agreement as the parties in interest may reach. If no such agreement among the parties in interest is reached, Owner as fiduciary shall adjust and settle the loss with the insurers and, if required in writing by any party in interest, Owner as fiduciary shall give bond for the proper performance of such duties.

5.09 *Acceptance of Bonds and Insurance; Option to Replace*

A. If either Owner or Contractor has any objection to the coverage afforded by or other provisions of the bonds or insurance required to be purchased and maintained by the other party in accordance with Article 5 on the basis of non-conformance with the Contract Documents, the objecting party shall so notify the other party in writing within 10 days after receipt of the certificates (or other evidence requested) required by Paragraph 2.01.B. Owner and Contractor shall each provide to the other such additional information in respect of insurance provided as the other may reasonably request. If either party does not purchase or maintain all of the bonds or insurance required of such party by the Contract Documents, such party shall notify the other party in writing of such failure to purchase prior to the start of the Work, or of such failure to maintain prior to any change in the required coverage. Without prejudice to any other right or remedy, the other party may elect to obtain equivalent bonds or insurance to protect such other party's interests at the expense of the party who was required to provide such coverage, and a Change Order shall be issued to adjust the Contract Price accordingly.

5.10 *Partial Utilization, Acknowledgment of Property Insurer*

A. If Owner finds it necessary to occupy or use a portion or portions of the Work prior to Substantial Completion of all the Work as provided in Paragraph 14.05, no such use or occupancy shall commence before the insurers providing the property insurance pursuant to Paragraph 5.06 have acknowledged notice thereof and in writing effected any changes in coverage necessitated thereby. The insurers providing the property insurance shall consent

Attachment: Holly Hill LS_13 Rehabilitation_Bid Set Specifications_04.30.19 (2019-R-38 : Lift Station #13 Rehabilitation)

Copyright © 2007 National Society of Professional Engineers for EJCDC. All rights reserved.

by endorsement on the policy or policies, but the property insurance shall not be canceled or permitted to lapse on account of any such partial use or occupancy.

ARTICLE 6 – CONTRACTOR'S RESPONSIBILITIES

6.01 *Supervision and Superintendence*

A. Contractor shall supervise, inspect, and direct the Work competently and efficiently, devoting such attention thereto and applying such skills and expertise as may be necessary to perform the Work in accordance with the Contract Documents. Contractor shall be solely responsible for the means, methods, techniques, sequences, and procedures of construction. Contractor shall not be responsible for the negligence of Owner or Engineer in the design or specification of a specific means, method, technique, sequence, or procedure of construction which is shown or indicated in and expressly required by the Contract Documents.

B. At all times during the progress of the Work, Contractor shall assign a competent resident superintendent who shall not be replaced without written notice to Owner and Engineer except under extraordinary circumstances.

6.02 *Labor; Working Hours*

A. Contractor shall provide competent, suitably qualified personnel to survey and lay out the Work and perform construction as required by the Contract Documents. Contractor shall at all times maintain good discipline and order at the Site.

B. Except as otherwise required for the safety or protection of persons or the Work or property at the Site or adjacent thereto, and except as otherwise stated in the Contract Documents, all Work at the Site shall be performed during regular working hours. Contractor will not permit the performance of Work on a Saturday, Sunday, or any legal holiday without Owner's written consent (which will not be unreasonably withheld) given after prior written notice to Engineer.

6.03 *Services, Materials, and Equipment*

A. Unless otherwise specified in the Contract Documents, Contractor shall provide and assume full responsibility for all services, materials, equipment, labor, transportation, construction equipment and machinery, tools, appliances, fuel, power, light, heat, telephone, water, sanitary facilities, temporary facilities, and all other facilities and incidentals necessary for the performance, testing, start-up, and completion of the Work.

B. All materials and equipment incorporated into the Work shall be as specified or, if not specified, shall be of good quality and new, except as otherwise provided in the Contract Documents. All special warranties and guarantees required by the Specifications shall expressly run to the benefit of Owner. If required by Engineer, Contractor shall furnish

Attachment: Holly Hill LS_13 Rehabilitation_Bid Set Specifications_04.30.19 (2019-R-38 : Lift Station #13 Rehabilitation)

Copyright © 2007 National Society of Professional Engineers for EJCDC. All rights reserved.

satisfactory evidence (including reports of required tests) as to the source, kind, and quality of materials and equipment.

C. All materials and equipment shall be stored, applied, installed, connected, erected, protected, used, cleaned, and conditioned in accordance with instructions of the applicable Supplier, except as otherwise may be provided in the Contract Documents.

6.04 *Progress Schedule*

A. Contractor shall adhere to the Progress Schedule established in accordance with Paragraph 2.07 as it may be adjusted from time to time as provided below.

1. Contractor shall submit to Engineer for acceptance (to the extent indicated in Paragraph 2.07) proposed adjustments in the Progress Schedule that will not result in changing the Contract Times. Such adjustments will comply with any provisions of the General Requirements applicable thereto.

2. Proposed adjustments in the Progress Schedule that will change the Contract Times shall be submitted in accordance with the requirements of Article 12. Adjustments in Contract Times may only be made by a Change Order.

6.05 *Substitutes and "Or-Equals"*

A. Whenever an item of material or equipment is specified or described in the Contract Documents by using the name of a proprietary item or the name of a particular Supplier, the specification or description is intended to establish the type, function, appearance, and quality required. Unless the specification or description contains or is followed by words reading that no like, equivalent, or "or-equal" item or no substitution is permitted, other items of material or equipment or material or equipment of other Suppliers may be submitted to Engineer for review under the circumstances described below.

1. "Or-Equal" Items: If in Engineer's sole discretion an item of material or equipment proposed by Contractor is functionally equal to that named and sufficiently similar so that no change in related Work will be required, it may be considered by Engineer as an "or-equal" item, in which case review and approval of the proposed item may, in Engineer's sole discretion, be accomplished without compliance with some or all of the requirements for approval of proposed substitute items. For the purposes of this Paragraph 6.05.A.1, a proposed item of material or equipment will be considered functionally equal to an item so named if:

a. In the exercise of reasonable judgment Engineer determines that:

1) It is at least equal in materials of construction, quality, durability, appearance, strength, and design characteristics;

Attachment: Holly Hill LS_13 Rehabilitation_Bid Set Specifications_04.30.19 (2019-R-38 : Lift Station #13 Rehabilitation)

Copyright © 2007 National Society of Professional Engineers for EJCDC. All rights reserved.

2) It will reliably perform at least equally well the function and achieve the results imposed by the design concept of the completed Project as a functioning whole; and

3) It has a proven record of performance and availability of responsive service.

b. Contractor certifies that, if approved and incorporated into the Work:

1) There will be no increase in cost to the Owner or increase in Contract Times; and

2) It will conform substantially to the detailed requirements of the item named in the Contract Documents.

2. Substitute Items:

a. If in Engineer's sole discretion an item of material or equipment proposed by Contractor does not qualify as an "or-equal" item under Paragraph 6.05.A.1, it will be considered a proposed substitute item.

b. Contractor shall submit sufficient information as provided below to allow Engineer to determine if the item of material or equipment proposed is essentially equivalent to that named and an acceptable substitute therefore. Requests for review of proposed substitute items of material or equipment will not be accepted by Engineer from anyone other than Contractor.

c. The requirements for review by Engineer will be as set forth in Paragraph 6.05.A.2.d, as supplemented by the General Requirements, and as Engineer may decide is appropriate under the circumstances.

d. Contractor shall make written application to Engineer for review of a proposed substitute item of material or equipment that Contractor seeks to furnish or use. The application:

1) Shall certify that the proposed substitute item will:

a) Perform adequately the functions and achieve the results called for by the general design,

b) Be similar in substance to that specified, and

c) Be suited to the same use as that specified;

2) Will state:

Attachment: Holly Hill LS_13 Rehabilitation_Bid Set Specifications_04.30.19 (2019-R-38 : Lift Station #13 Rehabilitation)

Copyright © 2007 National Society of Professional Engineers for EJCDC. All rights reserved.

a) The extent, if any, to which the use of the proposed substitute item will prejudice Contractor's achievement of Substantial Completion on time,

b) Whether use of the proposed substitute item in the Work will require a change in any of the Contract Documents (or in the provisions of any other direct contract with Owner for other work on the Project) to adapt the design to the proposed substitute item, and

c) Whether incorporation or use of the proposed substitute item in connection with the Work is subject to payment of any license fee or royalty;

3) Will identify:

a) All variations of the proposed substitute item from that specified, and

b) Available engineering, sales, maintenance, repair, and replacement services; and

4) Shall contain an itemized estimate of all costs or credits that will result directly or indirectly from use of such substitute item, including costs of redesign and claims of other contractors affected by any resulting change.

B. Substitute Construction Methods or Procedures: If a specific means, method, technique, sequence, or procedure of construction is expressly required by the Contract Documents, Contractor may furnish or utilize a substitute means, method, technique, sequence, or procedure of construction approved by Engineer. Contractor shall submit sufficient information to allow Engineer, in Engineer's sole discretion, to determine that the substitute proposed is equivalent to that expressly called for by the Contract Documents. The requirements for review by Engineer will be similar to those provided in Paragraph 6.05.A.2.

C. Engineer's Evaluation: Engineer will be allowed a reasonable time within which to evaluate each proposal or submittal made pursuant to Paragraphs 6.05.A and 6.05.B. Engineer may require Contractor to furnish additional data about the proposed substitute item. Engineer will be the sole judge of acceptability. No "or equal" or substitute will be ordered, installed or utilized until Engineer's review is complete, which will be evidenced by a Change Order in the case of a substitute and an approved Shop Drawing for an "or equal." Engineer will advise Contractor in writing of any negative determination.

Attachment: Holly Hill LS_13 Rehabilitation_Bid Set Specifications_04.30.19 (2019-R-38 : Lift Station #13 Rehabilitation)

Copyright © 2007 National Society of Professional Engineers for EJCDC. All rights reserved.

D. Special Guarantee: Owner may require Contractor to furnish at Contractor's expense a special performance guarantee or other surety with respect to any substitute.

E. Engineer's Cost Reimbursement: Engineer will record Engineer's costs in evaluating a substitute proposed or submitted by Contractor pursuant to Paragraphs 6.05.A.2 and 6.05.B. Whether or not Engineer approves a substitute so proposed or submitted by Contractor, Contractor shall reimburse Owner for the reasonable charges of Engineer for evaluating each such proposed substitute. Contractor shall also reimburse Owner for the reasonable charges of Engineer for making changes in the Contract Documents (or in the provisions of any other direct contract with Owner) resulting from the acceptance of each proposed substitute.

F. Contractor's Expense: Contractor shall provide all data in support of any proposed substitute or "or-equal" at Contractor's expense.

6.06 *Concerning Subcontractors, Suppliers, and Others*

A. Contractor shall not employ any Subcontractor, Supplier, or other individual or entity (including those acceptable to Owner as indicated in Paragraph 6.06.B), whether initially or as a replacement, against whom Owner may have reasonable objection. Contractor shall not be required to employ any Subcontractor, Supplier, or other individual or entity to furnish or perform any of the Work against whom Contractor has reasonable objection.

B. If the Supplementary Conditions require the identity of certain Subcontractors, Suppliers, or other individuals or entities to be submitted to Owner in advance for acceptance by Owner by a specified date prior to the Effective Date of the Agreement, and if Contractor has submitted a list thereof in accordance with the Supplementary Conditions, Owner's acceptance (either in writing or by failing to make written objection thereto by the date indicated for acceptance or objection in the Bidding Documents or the Contract Documents) of any such Subcontractor, Supplier, or other individual or entity so identified may be revoked on the basis of reasonable objection after due investigation. Contractor shall submit an acceptable replacement for the rejected Subcontractor, Supplier, or other individual or entity, and the Contract Price will be adjusted by the difference in the cost occasioned by such replacement, and an appropriate Change Order will be issued. No acceptance by Owner of any such Subcontractor, Supplier, or other individual or entity, whether initially or as a replacement, shall constitute a waiver of any right of Owner or Engineer to reject defective Work.

C. Contractor shall be fully responsible to Owner and Engineer for all acts and omissions of the Subcontractors, Suppliers, and other individuals or entities performing or furnishing any of the Work just as Contractor is responsible for Contractor's own acts and omissions. Nothing in the Contract Documents:

Attachment: Holly Hill LS_13 Rehabilitation_Bid Set Specifications_04.30.19 (2019-R-38 : Lift Station #13 Rehabilitation)

Copyright © 2007 National Society of Professional Engineers for EJCDC. All rights reserved.

1. Shall create for the benefit of any such Subcontractor, Supplier, or other individual or entity any contractual relationship between Owner or Engineer and any such Subcontractor, Supplier or other individual or entity; nor

2. Shall create any obligation on the part of Owner or Engineer to pay or to see to the payment of any moneys due any such Subcontractor, Supplier, or other individual or entity except as may otherwise be required by Laws and Regulations.

D. Contractor shall be solely responsible for scheduling and coordinating the Work of Subcontractors, Suppliers, and other individuals or entities performing or furnishing any of the Work under a direct or indirect contract with Contractor.

E. Contractor shall require all Subcontractors, Suppliers, and such other individuals or entities performing or furnishing any of the Work to communicate with Engineer through Contractor.

F. The divisions and sections of the Specifications and the identifications of any Drawings shall not control Contractor in dividing the Work among Subcontractors or Suppliers or delineating the Work to be performed by any specific trade.

G. All Work performed for Contractor by a Subcontractor or Supplier will be pursuant to an appropriate agreement between Contractor and the Subcontractor or Supplier which specifically binds the Subcontractor or Supplier to the applicable terms and conditions of the Contract Documents for the benefit of Owner and Engineer. Whenever any such agreement is with a Subcontractor or Supplier who is listed as a loss payee on the property insurance provided in Paragraph 5.06, the agreement between the Contractor and the Subcontractor or Supplier will contain provisions whereby the Subcontractor or Supplier waives all rights against Owner, Contractor, Engineer, and all other individuals or entities identified in the Supplementary Conditions to be listed as insureds or loss payees (and the officers, directors, members, partners, employees, agents, consultants, and subcontractors of each and any of them) for all losses and damages caused by, arising out of, relating to, or resulting from any of the perils or causes of loss covered by such policies and any other property insurance applicable to the Work. If the insurers on any such policies require separate waiver forms to be signed by any Subcontractor or Supplier, Contractor will obtain the same.

6.07 *Patent Fees and Royalties*

A. Contractor shall pay all license fees and royalties and assume all costs incident to the use in the performance of the Work or the incorporation in the Work of any invention, design, process, product, or device which is the subject of patent rights or copyrights held by others. If a particular invention, design, process, product, or device is specified in the Contract Documents for use in the performance of the Work and if, to the actual knowledge of Owner or Engineer, its use is subject to patent rights or copyrights calling for the payment

Attachment: Holly Hill LS_13 Rehabilitation_Bid Set Specifications_04.30.19 (2019-R-38 : Lift Station #13 Rehabilitation)

Copyright © 2007 National Society of Professional Engineers for EJCDC. All rights reserved.

of any license fee or royalty to others, the existence of such rights shall be disclosed by Owner in the Contract Documents.

B. To the fullest extent permitted by Laws and Regulations, Owner shall indemnify and hold harmless Contractor, and its officers, directors, members, partners, employees, agents, consultants, and subcontractors from and against all claims, costs, losses, and damages (including but not limited to all fees and charges of engineers, architects, attorneys, and other professionals, and all court or arbitration or other dispute resolution costs) arising out of or relating to any infringement of patent rights or copyrights incident to the use in the performance of the Work or resulting from the incorporation in the Work of any invention, design, process, product, or device specified in the Contract Documents, but not identified as being subject to payment of any license fee or royalty to others required by patent rights or copyrights.

C. To the fullest extent permitted by Laws and Regulations, Contractor shall indemnify and hold harmless Owner and Engineer, and the officers, directors, members, partners, employees, agents, consultants and subcontractors of each and any of them from and against all claims, costs, losses, and damages (including but not limited to all fees and charges of engineers, architects, attorneys, and other professionals and all court or arbitration or other dispute resolution costs) arising out of or relating to any infringement of patent rights or copyrights incident to the use in the performance of the Work or resulting from the incorporation in the Work of any invention, design, process, product, or device not specified in the Contract Documents.

6.08 *Permits*

A. Unless otherwise provided in the Supplementary Conditions, Contractor shall obtain and pay for all construction permits and licenses. Owner shall assist Contractor, when necessary, in obtaining such permits and licenses. Contractor shall pay all governmental charges and inspection fees necessary for the prosecution of the Work which are applicable at the time of opening of Bids, or, if there are no Bids, on the Effective Date of the Agreement. Owner shall pay all charges of utility owners for connections for providing permanent service to the Work.

6.09 *Laws and Regulations*

A. Contractor shall give all notices required by and shall comply with all Laws and Regulations applicable to the performance of the Work. Except where otherwise expressly required by applicable Laws and Regulations, neither Owner nor Engineer shall be responsible for monitoring Contractor's compliance with any Laws or Regulations.

B. If Contractor performs any Work knowing or having reason to know that it is contrary to Laws or Regulations, Contractor shall bear all claims, costs, losses, and damages (including but not limited to all fees and charges of engineers, architects, attorneys, and other

Attachment: Holly Hill LS_13 Rehabilitation_Bid Set Specifications_04.30.19 (2019-R-38 : Lift Station #13 Rehabilitation)

Copyright © 2007 National Society of Professional Engineers for EJCDC. All rights reserved.

professionals and all court or arbitration or other dispute resolution costs) arising out of or relating to such Work. However, it shall not be Contractor's responsibility to make certain that the Specifications and Drawings are in accordance with Laws and Regulations, but this shall not relieve Contractor of Contractor's obligations under Paragraph 3.03.

C. Changes in Laws or Regulations not known at the time of opening of Bids (or, on the Effective Date of the Agreement if there were no Bids) having an effect on the cost or time of performance of the Work shall be the subject of an adjustment in Contract Price or Contract Times. If Owner and Contractor are unable to agree on entitlement to or on the amount or extent, if any, of any such adjustment, a Claim may be made therefore as provided in Paragraph 10.05.

6.10 *Taxes*

A. Contractor shall pay all sales, consumer, use, and other similar taxes required to be paid by Contractor in accordance with the Laws and Regulations of the place of the Project which are applicable during the performance of the Work.

6.11 *Use of Site and Other Areas*

A. Limitation on Use of Site and Other Areas:

1. Contractor shall confine construction equipment, the storage of materials and equipment, and the operations of workers to the Site and other areas permitted by Laws and Regulations, and shall not unreasonably encumber the Site and other areas with construction equipment or other materials or equipment. Contractor shall assume full responsibility for any damage to any such land or area, or to the owner or occupant thereof, or of any adjacent land or areas resulting from the performance of the Work.

2. Should any claim be made by any such owner or occupant because of the performance of the Work, Contractor shall promptly settle with such other party by negotiation or otherwise resolve the claim by arbitration or other dispute resolution proceeding or at law.

3. To the fullest extent permitted by Laws and Regulations, Contractor shall indemnify and hold harmless Owner and Engineer, and the officers, directors, members, partners, employees, agents, consultants and subcontractors of each and any of them from and against all claims, costs, losses, and damages (including but not limited to all fees and charges of engineers, architects, attorneys, and other professionals and all court or arbitration or other dispute resolution costs) arising out of or relating to any claim or action, legal or equitable, brought by any such owner or occupant against Owner, Engineer, or any other party indemnified hereunder to the extent caused by or based upon Contractor's performance of the Work.

Attachment: Holly Hill LS_13 Rehabilitation_Bid Set Specifications_04.30.19 (2019-R-38 : Lift Station #13 Rehabilitation)

Copyright © 2007 National Society of Professional Engineers for EJCDC. All rights reserved.

B. Removal of Debris During Performance of the Work: During the progress of the Work Contractor shall keep the Site and other areas free from accumulations of waste materials, rubbish, and other debris. Removal and disposal of such waste materials, rubbish, and other debris shall conform to applicable Laws and Regulations.

C. Cleaning: Prior to Substantial Completion of the Work Contractor shall clean the Site and the Work and make it ready for utilization by Owner. At the completion of the Work Contractor shall remove from the Site all tools, appliances, construction equipment and machinery, and surplus materials and shall restore to original condition all property not designated for alteration by the Contract Documents.

D. Loading Structures: Contractor shall not load nor permit any part of any structure to be loaded in any manner that will endanger the structure, nor shall Contractor subject any part of the Work or adjacent property to stresses or pressures that will endanger it.

6.12 *Record Documents*

A. Contractor shall maintain in a safe place at the Site one record copy of all Drawings, Specifications, Addenda, Change Orders, Work Change Directives, Field Orders, and written interpretations and clarifications in good order and annotated to show changes made during construction. These record documents together with all approved Samples and a counterpart of all approved Shop Drawings will be available to Engineer for reference. Upon completion of the Work, these record documents, Samples, and Shop Drawings will be delivered to Engineer for Owner.

6.13 *Safety and Protection*

A. Contractor shall be solely responsible for initiating, maintaining and supervising all safety precautions and programs in connection with the Work. Such responsibility does not relieve Subcontractors of their responsibility for the safety of persons or property in the performance of their work, nor for compliance with applicable safety Laws and Regulations. Contractor shall take all necessary precautions for the safety of, and shall provide the necessary protection to prevent damage, injury or loss to:

1. All persons on the Site or who may be affected by the Work;

2. All the Work and materials and equipment to be incorporated therein, whether in storage on or off the Site; and

3. Other property at the Site or adjacent thereto, including trees, shrubs, lawns, walks, pavements, roadways, structures, utilities, and Underground Facilities not designated for removal, relocation, or replacement in the course of construction.

Attachment: Holly Hill LS_13 Rehabilitation_Bid Set Specifications_04.30.19 (2019-R-38 : Lift Station #13 Rehabilitation)

Copyright © 2007 National Society of Professional Engineers for EJCDC. All rights reserved.

B. Contractor shall comply with all applicable Laws and Regulations relating to the safety of persons or property, or to the protection of persons or property from damage, injury, or loss; and shall erect and maintain all necessary safeguards for such safety and protection. Contractor shall notify owners of adjacent property and of Underground Facilities and other utility owners when prosecution of the Work may affect them, and shall cooperate with them in the protection, removal, relocation, and replacement of their property.

C. Contractor shall comply with the applicable requirements of Owner's safety programs, if any. The Supplementary Conditions identify any Owner's safety programs that are applicable to the Work.

D. Contractor shall inform Owner and Engineer of the specific requirements of Contractor's safety program with which Owner's and Engineer's employees and representatives must comply while at the Site.

E. All damage, injury, or loss to any property referred to in Paragraph 6.13.A.2 or 6.13.A.3 caused, directly or indirectly, in whole or in part, by Contractor, any Subcontractor, Supplier, or any other individual or entity directly or indirectly employed by any of them to perform any of the Work, or anyone for whose acts any of them may be liable, shall be remedied by Contractor (except damage or loss attributable to the fault of Drawings or Specifications or to the acts or omissions of Owner or Engineer or anyone employed by any of them, or anyone for whose acts any of them may be liable, and not attributable, directly or indirectly, in whole or in part, to the fault or negligence of Contractor or any Subcontractor, Supplier, or other individual or entity directly or indirectly employed by any of them).

F. Contractor's duties and responsibilities for safety and for protection of the Work shall continue until such time as all the Work is completed and Engineer has issued a notice to Owner and Contractor in accordance with Paragraph 14.07.B that the Work is acceptable (except as otherwise expressly provided in connection with Substantial Completion).

6.14 *Safety Representative*

A. Contractor shall designate a qualified and experienced safety representative at the Site whose duties and responsibilities shall be the prevention of accidents and the maintaining and supervising of safety precautions and programs.

6.15 *Hazard Communication Programs*

A. Contractor shall be responsible for coordinating any exchange of material safety data sheets or other hazard communication information required to be made available to or exchanged between or among employers at the Site in accordance with Laws or Regulations.

Attachment: Holly Hill LS_13 Rehabilitation_Bid Set Specifications_04.30.19 (2019-R-38 : Lift Station #13 Rehabilitation)

Copyright © 2007 National Society of Professional Engineers for EJCDC. All rights reserved.

6.16 *Emergencies*

A. In emergencies affecting the safety or protection of persons or the Work or property at the Site or adjacent thereto, Contractor is obligated to act to prevent threatened damage, injury, or loss. Contractor shall give Engineer prompt written notice if Contractor believes that any significant changes in the Work or variations from the Contract Documents have been caused thereby or are required as a result thereof. If Engineer determines that a change in the Contract Documents is required because of the action taken by Contractor in response to such an emergency, a Work Change Directive or Change Order will be issued.

6.17 *Shop Drawings and Samples*

A. Contractor shall submit Shop Drawings and Samples to Engineer for review and approval in accordance with the accepted Schedule of Submittals (as required by Paragraph 2.07). Each submittal will be identified as Engineer may require.

1. Shop Drawings:

a. Submit number of copies specified in the General Requirements.

b. Data shown on the Shop Drawings will be complete with respect to quantities, dimensions, specified performance and design criteria, materials, and similar data to show Engineer the services, materials, and equipment Contractor proposes to provide and to enable Engineer to review the information for the limited purposes required by Paragraph 6.17.D.

2. Samples:

a. Submit number of Samples specified in the Specifications.

b. Clearly identify each Sample as to material, Supplier, pertinent data such as catalog numbers, the use for which intended, and other data as Engineer may require to enable Engineer to review the submittal for the limited purposes required by Paragraph 6.17.D.

B. Where a Shop Drawing or Sample is required by the Contract Documents or the Schedule of Submittals, any related Work performed prior to Engineer's review and approval of the pertinent submittal will be at the sole expense and responsibility of Contractor.

Attachment: Holly Hill LS_13 Rehabilitation_Bid Set Specifications_04.30.19 (2019-R-38 : Lift Station #13 Rehabilitation)

Copyright © 2007 National Society of Professional Engineers for EJCDC. All rights reserved.

C. Submittal Procedures:

1. Before submitting each Shop Drawing or Sample, Contractor shall have:

   a. Reviewed and coordinated each Shop Drawing or Sample with other Shop Drawings and Samples and with the requirements of the Work and the Contract Documents;

   b. Determined and verified all field measurements, quantities, dimensions, specified performance and design criteria, installation requirements, materials, catalog numbers, and similar information with respect thereto;

   c. Determined and verified the suitability of all materials offered with respect to the indicated application, fabrication, shipping, handling, storage, assembly, and installation pertaining to the performance of the Work; and

   d. Determined and verified all information relative to Contractor's responsibilities for means, methods, techniques, sequences, and procedures of construction, and safety precautions and programs incident thereto.

2. Each submittal shall bear a stamp or specific written certification that Contractor has satisfied Contractor's obligations under the Contract Documents with respect to Contractor's review and approval of that submittal.

3. With each submittal, Contractor shall give Engineer specific written notice of any variations that the Shop Drawing or Sample may have from the requirements of the Contract Documents. This notice shall be both a written communication separate from the Shop Drawings or Sample submittal; and, in addition, by a specific notation made on each Shop Drawing or Sample submitted to Engineer for review and approval of each such variation.

D. Engineer's Review:

1. Engineer will provide timely review of Shop Drawings and Samples in accordance with the Schedule of Submittals acceptable to Engineer. Engineer's review and approval will be only to determine if the items covered by the submittals will, after installation or incorporation in the Work, conform to the information given in the Contract Documents and be compatible with the design concept of the completed Project as a functioning whole as indicated by the Contract Documents.

2. Engineer's review and approval will not extend to means, methods, techniques, sequences, or procedures of construction (except where a particular means, method, technique, sequence, or procedure of construction is specifically and expressly called for by the Contract Documents) or to safety precautions or programs incident

Attachment: Holly Hill LS_13 Rehabilitation_Bid Set Specifications_04.30.19 (2019-R-38 : Lift Station #13 Rehabilitation)

Copyright © 2007 National Society of Professional Engineers for EJCDC. All rights reserved.

thereto. The review and approval of a separate item as such will not indicate approval of the assembly in which the item functions.

3. Engineer's review and approval shall not relieve Contractor from responsibility for any variation from the requirements of the Contract Documents unless Contractor has complied with the requirements of Paragraph 6.17.C.3 and Engineer has given written approval of each such variation by specific written notation thereof incorporated in or accompanying the Shop Drawing or Sample. Engineer's review and approval shall not relieve Contractor from responsibility for complying with the requirements of Paragraph 6.17.C.1.

E. Resubmittal Procedures:

1. Contractor shall make corrections required by Engineer and shall return the required number of corrected copies of Shop Drawings and submit, as required, new Samples for review and approval. Contractor shall direct specific attention in writing to revisions other than the corrections called for by Engineer on previous submittals.

6.18 *Continuing the Work*

A. Contractor shall carry on the Work and adhere to the Progress Schedule during all disputes or disagreements with Owner. No Work shall be delayed or postponed pending resolution of any disputes or disagreements, except as permitted by Paragraph 15.04 or as Owner and Contractor may otherwise agree in writing.

6.19 *Contractor's General Warranty and Guarantee*

A. Contractor warrants and guarantees to Owner that all Work will be in accordance with the Contract Documents and will not be defective. Engineer and its officers, directors, members, partners, employees, agents, consultants, and subcontractors shall be entitled to rely on representation of Contractor's warranty and guarantee.

B. Contractor's warranty and guarantee hereunder excludes defects or damage caused by:

1. Abuse, modification, or improper maintenance or operation by persons other than Contractor, Subcontractors, Suppliers, or any other individual or entity for whom Contractor is responsible; or

2. Normal wear and tear under normal usage.

C. Contractor's obligation to perform and complete the Work in accordance with the Contract Documents shall be absolute. None of the following will constitute an acceptance of Work that is not in accordance with the Contract Documents or a release of Contractor's obligation to perform the Work in accordance with the Contract Documents:

Attachment: Holly Hill LS_13 Rehabilitation_Bid Set Specifications_04.30.19 (2019-R-38 : Lift Station #13 Rehabilitation)

Copyright © 2007 National Society of Professional Engineers for EJCDC. All rights reserved.

1. Observations by Engineer;

2. Recommendation by Engineer or payment by Owner of any progress or final payment;

3. The issuance of a certificate of Substantial Completion by Engineer or any payment related thereto by Owner;

4. Use or occupancy of the Work or any part thereof by Owner;

5. Any review and approval of a Shop Drawing or Sample submittal or the issuance of a notice of acceptability by Engineer;

6. Any inspection, test, or approval by others; or

7. Any correction of defective Work by Owner.

6.20 *Indemnification*

A. To the fullest extent permitted by Laws and Regulations, Contractor shall indemnify and hold harmless Owner and Engineer, and the officers, directors, members, partners, employees, agents, consultants and subcontractors of each and any of them from and against all claims, costs, losses, and damages (including but not limited to all fees and charges of engineers, architects, attorneys, and other professionals and all court or arbitration or other dispute resolution costs) arising out of or relating to the performance of the Work, provided that any such claim, cost, loss, or damage is attributable to bodily injury, sickness, disease, or death, or to injury to or destruction of tangible property (other than the Work itself), including the loss of use resulting there from but only to the extent caused by any negligent act or omission of Contractor, any Subcontractor, any Supplier, or any individual or entity directly or indirectly employed by any of them to perform any of the Work or anyone for whose acts any of them may be liable .

B. In any and all claims against Owner or Engineer or any of their officers, directors, members, partners, employees, agents, consultants, or subcontractors by any employee (or the survivor or personal representative of such employee) of Contractor, any Subcontractor, any Supplier, or any individual or entity directly or indirectly employed by any of them to perform any of the Work, or anyone for whose acts any of them may be liable, the indemnification obligation under Paragraph 6.20.A shall not be limited in any way by any limitation on the amount or type of damages, compensation, or benefits payable by or for Contractor or any such Subcontractor, Supplier, or other individual or entity under workers' compensation acts, disability benefit acts, or other employee benefit acts.

C. The indemnification obligations of Contractor under Paragraph 6.20.A shall not extend to the liability of Engineer and Engineer's officers, directors, members, partners, employees, agents, consultants and subcontractors arising out of:

Attachment: Holly Hill LS_13 Rehabilitation_Bid Set Specifications_04.30.19 (2019-R-38 : Lift Station #13 Rehabilitation)

Copyright © 2007 National Society of Professional Engineers for EJCDC. All rights reserved.

1. The preparation or approval of, or the failure to prepare or approve maps, Drawings, opinions, reports, surveys, Change Orders, designs, or Specifications; or

2. Giving directions or instructions, or failing to give them, if that is the primary cause of the injury or damage.

6.21 *Delegation of Professional Design Services*

A. Contractor will not be required to provide professional design services unless such services are specifically required by the Contract Documents for a portion of the Work or unless such services are required to carry out Contractor's responsibilities for construction means, methods, techniques, sequences and procedures. Contractor shall not be required to provide professional services in violation of applicable law.

B. If professional design services or certifications by a design professional related to systems, materials or equipment are specifically required of Contractor by the Contract Documents, Owner and Engineer will specify all performance and design criteria that such services must satisfy. Contractor shall cause such services or certifications to be provided by a properly licensed professional, whose signature and seal shall appear on all drawings, calculations, specifications, certifications, Shop Drawings and other submittals prepared by such professional. Shop Drawings and other submittals related to the Work designed or certified by such professional, if prepared by others, shall bear such professional's written approval when submitted to Engineer.

C. Owner and Engineer shall be entitled to rely upon the adequacy, accuracy and completeness of the services, certifications or approvals performed by such design professionals, provided Owner and Engineer have specified to Contractor all performance and design criteria that such services must satisfy.

D. Pursuant to this Paragraph 6.21, Engineer's review and approval of design calculations and design drawings will be only for the limited purpose of checking for conformance with performance and design criteria given and the design concept expressed in the Contract Documents. Engineer's review and approval of Shop Drawings and other submittals (except design calculations and design drawings) will be only for the purpose stated in Paragraph 6.17.D.1.

E. Contractor shall not be responsible for the adequacy of the performance or design criteria required by the Contract Documents.

Attachment: Holly Hill LS_13 Rehabilitation_Bid Set Specifications_04.30.19 (2019-R-38 : Lift Station #13 Rehabilitation)

Copyright © 2007 National Society of Professional Engineers for EJCDC. All rights reserved.

ARTICLE 7 – OTHER WORK AT THE SITE

7.01 *Related Work at Site*

A. Owner may perform other work related to the Project at the Site with Owner's employees or through other direct contracts therefore, or have other work performed by utility owners. If such other work is not noted in the Contract Documents, then:

1. Written notice thereof will be given to Contractor prior to starting any such other work; and

2. If Owner and Contractor are unable to agree on entitlement to or on the amount or extent, if any, of any adjustment in the Contract Price or Contract Times that should be allowed as a result of such other work, a Claim may be made therefore as provided in Paragraph 10.05.

B. Contractor shall afford each other contractor who is a party to such a direct contract, each utility owner, and Owner, if Owner is performing other work with Owner's employees, proper and safe access to the Site, provide a reasonable opportunity for the introduction and storage of materials and equipment and the execution of such other work, and properly coordinate the Work with theirs. Contractor shall do all cutting, fitting, and patching of the Work that may be required to properly connect or otherwise make its several parts come together and properly integrate with such other work. Contractor shall not endanger any work of others by cutting, excavating, or otherwise altering such work; provided, however, that Contractor may cut or alter others' work with the written consent of Engineer and the others whose work will be affected. The duties and responsibilities of Contractor under this Paragraph are for the benefit of such utility owners and other contractors to the extent that there are comparable provisions for the benefit of Contractor in said direct contracts between Owner and such utility owners and other contractors.

C. If the proper execution or results of any part of Contractor's Work depends upon work performed by others under this Article 7, Contractor shall inspect such other work and promptly report to Engineer in writing any delays, defects, or deficiencies in such other work that render it unavailable or unsuitable for the proper execution and results of Contractor's Work. Contractor's failure to so report will constitute an acceptance of such other work as fit and proper for integration with Contractor's Work except for latent defects and deficiencies in such other work.

7.02 *Coordination*

A. If Owner intends to contract with others for the performance of other work on the Project at the Site, the following will be set forth in Supplementary Conditions:

1. The individual or entity who will have authority and responsibility for coordination of the activities among the various contractors will be identified;

Attachment: Holly Hill LS_13 Rehabilitation_Bid Set Specifications_04.30.19 (2019-R-38 : Lift Station #13 Rehabilitation)

Copyright © 2007 National Society of Professional Engineers for EJCDC. All rights reserved.

2. The specific matters to be covered by such authority and responsibility will be itemized; and

3. The extent of such authority and responsibilities will be provided.

B. Unless otherwise provided in the Supplementary Conditions, Owner shall have sole authority and responsibility for such coordination.

7.03 *Legal Relationships*

A. Paragraphs 7.01.A and 7.02 are not applicable for utilities not under the control of Owner.

B. Each other direct contract of Owner under Paragraph 7.01.A shall provide that the other contractor is liable to Owner and Contractor for the reasonable direct delay and disruption costs incurred by Contractor as a result of the other contractor's wrongful actions or inactions.

C. Contractor shall be liable to Owner and any other contractor under direct contract to Owner for the reasonable direct delay and disruption costs incurred by such other contractor as a result of Contractor's wrongful action or inactions.

ARTICLE 8 – OWNER'S RESPONSIBILITIES

8.01 *Communications to Contractor*

A. Except as otherwise provided in these General Conditions, Owner shall issue all communications to Contractor through Engineer.

8.02 *Replacement of Engineer*

A. In case of termination of the employment of Engineer, Owner shall appoint an engineer to whom Contractor makes no reasonable objection, whose status under the Contract Documents shall be that of the former Engineer.

8.03 *Furnish Data*

A. Owner shall promptly furnish the data required of Owner under the Contract Documents.

8.04 *Pay When Due*

A. Owner shall make payments to Contractor when they are due as provided in Paragraphs 14.02.C and 14.07.C.

Attachment: Holly Hill LS_13 Rehabilitation_Bid Set Specifications_04.30.19 (2019-R-38 : Lift Station #13 Rehabilitation)

Copyright © 2007 National Society of Professional Engineers for EJCDC. All rights reserved.

8.05 *Lands and Easements; Reports and Tests*

A. Owner's duties with respect to providing lands and easements and providing engineering surveys to establish reference points are set forth in Paragraphs 4.01 and 4.05. Paragraph 4.02 refers to Owner's identifying and making available to Contractor copies of reports of explorations and tests of subsurface conditions and drawings of physical conditions relating to existing surface or subsurface structures at the Site.

8.06 *Insurance*

A. Owner's responsibilities, if any, with respect to purchasing and maintaining liability and property insurance are set forth in Article 5.

8.07 *Change Orders*

A. Owner is obligated to execute Change Orders as indicated in Paragraph 10.03.

8.08 *Inspections, Tests, and Approvals*

A. Owner's responsibility with respect to certain inspections, tests, and approvals is set forth in Paragraph 13.03.B.

8.09 *Limitations on Owner's Responsibilities*

A. The Owner shall not supervise, direct, or have control or authority over, nor be responsible for, Contractor's means, methods, techniques, sequences, or procedures of construction, or the safety precautions and programs incident thereto, or for any failure of Contractor to comply with Laws and Regulations applicable to the performance of the Work. Owner will not be responsible for Contractor's failure to perform the Work in accordance with the Contract Documents.

8.10 *Undisclosed Hazardous Environmental Condition*

A. Owner's responsibility in respect to an undisclosed Hazardous Environmental Condition is set forth in Paragraph 4.06.

8.11 *Evidence of Financial Arrangements*

A. Upon request of Contractor, Owner shall furnish Contractor reasonable evidence that financial arrangements have been made to satisfy Owner's obligations under the Contract Documents.

Attachment: Holly Hill LS_13 Rehabilitation_Bid Set Specifications_04.30.19 (2019-R-38 : Lift Station #13 Rehabilitation)

Copyright © 2007 National Society of Professional Engineers for EJCDC. All rights reserved.

8.12 *Compliance with Safety Program*

A. While at the Site, Owner's employees and representatives shall comply with the specific applicable requirements of Contractor's safety programs of which Owner has been informed pursuant to Paragraph 6.13.D.

ARTICLE 9 – ENGINEER'S STATUS DURING CONSTRUCTION

9.01 *Owner's Representative*

A. Engineer will be Owner's representative during the construction period. The duties and responsibilities and the limitations of authority of Engineer as Owner's representative during construction are set forth in the Contract Documents.

9.02 *Visits to Site*

A. Engineer will make visits to the Site at intervals appropriate to the various stages of construction as Engineer deems necessary in order to observe as an experienced and qualified design professional the progress that has been made and the quality of the various aspects of Contractor's executed Work. Based on information obtained during such visits and observations, Engineer, for the benefit of Owner, will determine, in general, if the Work is proceeding in accordance with the Contract Documents. Engineer will not be required to make exhaustive or continuous inspections on the Site to check the quality or quantity of the Work. Engineer's efforts will be directed toward providing for Owner a greater degree of confidence that the completed Work will conform generally to the Contract Documents. On the basis of such visits and observations, Engineer will keep Owner informed of the progress of the Work and will endeavor to guard Owner against defective Work.

B. Engineer's visits and observations are subject to all the limitations on Engineer's authority and responsibility set forth in Paragraph 9.09. Particularly, but without limitation, during or as a result of Engineer's visits or observations of Contractor's Work, Engineer will not supervise, direct, control, or have authority over or be responsible for Contractor's means, methods, techniques, sequences, or procedures of construction, or the safety precautions and programs incident thereto, or for any failure of Contractor to comply with Laws and Regulations applicable to the performance of the Work.

9.03 *Project Representative*

A. If Owner and Engineer agree, Engineer will furnish a Resident Project Representative to assist Engineer in providing more extensive observation of the Work. The authority and responsibilities of any such Resident Project Representative and assistants will be as provided in the Supplementary Conditions, and limitations on the responsibilities thereof will be as provided in Paragraph 9.09. If Owner designates another representative or agent to represent Owner at the Site who is not Engineer's consultant, agent or employee, the

Attachment: Holly Hill LS_13 Rehabilitation_Bid Set Specifications_04.30.19 (2019-R-38 : Lift Station #13 Rehabilitation)

Copyright © 2007 National Society of Professional Engineers for EJCDC. All rights reserved.

responsibilities and authority and limitations thereon of such other individual or entity will be as provided in the Supplementary Conditions.

9.04 *Authorized Variations in Work*

A. Engineer may authorize minor variations in the Work from the requirements of the Contract Documents which do not involve an adjustment in the Contract Price or the Contract Times and are compatible with the design concept of the completed Project as a functioning whole as indicated by the Contract Documents. These may be accomplished by a Field Order and will be binding on Owner and also on Contractor, who shall perform the Work involved promptly. If Owner or Contractor believes that a Field Order justifies an adjustment in the Contract Price or Contract Times, or both, and the parties are unable to agree on entitlement to or on the amount or extent, if any, of any such adjustment, a Claim may be made therefore as provided in Paragraph 10.05.

9.05 *Rejecting Defective Work*

A. Engineer will have authority to reject Work which Engineer believes to be defective, or that Engineer believes will not produce a completed Project that conforms to the Contract Documents or that will prejudice the integrity of the design concept of the completed Project as a functioning whole as indicated by the Contract Documents. Engineer will also have authority to require special inspection or testing of the Work as provided in Paragraph 13.04, whether or not the Work is fabricated, installed, or completed.

9.06 *Shop Drawings, Change Orders and Payments*

A. In connection with Engineer's authority, and limitations thereof, as to Shop Drawings and Samples, see Paragraph 6.17.

B. In connection with Engineer's authority, and limitations thereof, as to design calculations and design drawings submitted in response to a delegation of professional design services, if any, see Paragraph 6.21.

C. In connection with Engineer's authority as to Change Orders, see Articles 10, 11, and 12.

D. In connection with Engineer's authority as to Applications for Payment, see Article 14.

9.07 *Determinations for Unit Price Work*

A. Engineer will determine the actual quantities and classifications of Unit Price Work performed by Contractor. Engineer will review with Contractor the Engineer's preliminary determinations on such matters before rendering a written decision thereon (by recommendation of an Application for Payment or otherwise). Engineer's written decision thereon will be final and binding (except as modified by Engineer to reflect changed factual

Attachment: Holly Hill LS_13 Rehabilitation_Bid Set Specifications_04.30.19 (2019-R-38 : Lift Station #13 Rehabilitation)

Copyright © 2007 National Society of Professional Engineers for EJCDC. All rights reserved.

conditions or more accurate data) upon Owner and Contractor, subject to the provisions of Paragraph 10.05.

9.08 *Decisions on Requirements of Contract Documents and Acceptability of Work*

A. Engineer will be the initial interpreter of the requirements of the Contract Documents and judge of the acceptability of the Work there under. All matters in question and other matters between Owner and Contractor arising prior to the date final payment is due relating to the acceptability of the Work, and the interpretation of the requirements of the Contract Documents pertaining to the performance of the Work, will be referred initially to Engineer in writing within 30 days of the event giving rise to the question.

B. Engineer will, with reasonable promptness, render a written decision on the issue referred. If Owner or Contractor believes that any such decision entitles them to an adjustment in the Contract Price or Contract Times or both, a Claim may be made under Paragraph 10.05. The date of Engineer's decision shall be the date of the event giving rise to the issues referenced for the purposes of Paragraph 10.05.B.

C. Engineer's written decision on the issue referred will be final and binding on Owner and Contractor, subject to the provisions of Paragraph 10.05.

D. When functioning as interpreter and judge under this Paragraph 9.08, Engineer will not show partiality to Owner or Contractor and will not be liable in connection with any interpretation or decision rendered in good faith in such capacity.

9.09 *Limitations on Engineer's Authority and Responsibilities*

A. Neither Engineer's authority or responsibility under this Article 9 or under any other provision of the Contract Documents nor any decision made by Engineer in good faith either to exercise or not exercise such authority or responsibility or the undertaking, exercise, or performance of any authority or responsibility by Engineer shall create, impose, or give rise to any duty in contract, tort, or otherwise owed by Engineer to Contractor, any Subcontractor, any Supplier, any other individual or entity, or to any surety for or employee or agent of any of them.

B. Engineer will not supervise, direct, control, or have authority over or be responsible for Contractor's means, methods, techniques, sequences, or procedures of construction, or the safety precautions and programs incident thereto, or for any failure of Contractor to comply with Laws and Regulations applicable to the performance of the Work. Engineer will not be responsible for Contractor's failure to perform the Work in accordance with the Contract Documents.

C. Engineer will not be responsible for the acts or omissions of Contractor or of any Subcontractor, any Supplier, or of any other individual or entity performing any of the Work.

Attachment: Holly Hill LS_13 Rehabilitation_Bid Set Specifications_04.30.19 (2019-R-38 : Lift Station #13 Rehabilitation)

Copyright © 2007 National Society of Professional Engineers for EJCDC. All rights reserved.

D. Engineer's review of the final Application for Payment and accompanying documentation and all maintenance and operating instructions, schedules, guarantees, bonds, certificates of inspection, tests and approvals, and other documentation required to be delivered by Paragraph 14.07.A will only be to determine generally that their content complies with the requirements of, and in the case of certificates of inspections, tests, and approvals that the results certified indicate compliance with, the Contract Documents.

E. The limitations upon authority and responsibility set forth in this Paragraph 9.09 shall also apply to the Resident Project Representative, if any, and assistants, if any.

9.10 *Compliance with Safety Program*

A. While at the Site, Engineer's employees and representatives shall comply with the specific applicable requirements of Contractor's safety programs of which Engineer has been informed pursuant to Paragraph 6.13.D.

ARTICLE 10 – CHANGES IN THE WORK; CLAIMS

10.01 *Authorized Changes in the Work*

A. Without invalidating the Contract and without notice to any surety, Owner may, at any time or from time to time, order additions, deletions, or revisions in the Work by a Change Order, or a Work Change Directive. Upon receipt of any such document, Contractor shall promptly proceed with the Work involved which will be performed under the applicable conditions of the Contract Documents (except as otherwise specifically provided).

B. If Owner and Contractor are unable to agree on entitlement to, or on the amount or extent, if any, of an adjustment in the Contract Price or Contract Times, or both, that should be allowed as a result of a Work Change Directive, a Claim may be made therefore as provided in Paragraph 10.05.

10.02 *Unauthorized Changes in the Work*

A. Contractor shall not be entitled to an increase in the Contract Price or an extension of the Contract Times with respect to any work performed that is not required by the Contract Documents as amended, modified, or supplemented as provided in Paragraph 3.04, except in the case of an emergency as provided in Paragraph 6.16 or in the case of uncovering Work as provided in Paragraph 13.04.D.

10.03 *Execution of Change Orders*

A. Owner and Contractor shall execute appropriate Change Orders recommended by Engineer covering:

Attachment: Holly Hill LS_13 Rehabilitation_Bid Set Specifications_04.30.19 (2019-R-38 : Lift Station #13 Rehabilitation)

Copyright © 2007 National Society of Professional Engineers for EJCDC. All rights reserved.

1. Changes in the Work which are: (i) ordered by Owner pursuant to Paragraph 10.01.A, (ii) required because of acceptance of defective Work under Paragraph 13.08.A or Owner's correction of defective Work under Paragraph 13.09, or (iii) agreed to by the parties;

2. Changes in the Contract Price or Contract Times which are agreed to by the parties, including any undisputed sum or amount of time for Work actually performed in accordance with a Work Change Directive; and

3. Changes in the Contract Price or Contract Times which embody the substance of any written decision rendered by Engineer pursuant to Paragraph 10.05; provided that, in lieu of executing any such Change Order, an appeal may be taken from any such decision in accordance with the provisions of the Contract Documents and applicable Laws and Regulations, but during any such appeal, Contractor shall carry on the Work and adhere to the Progress Schedule as provided in Paragraph 6.18.A.

10.04 *Notification to Surety*

A. If the provisions of any bond require notice to be given to a surety of any change affecting the general scope of the Work or the provisions of the Contract Documents (including, but not limited to, Contract Price or Contract Times), the giving of any such notice will be Contractor's responsibility. The amount of each applicable bond will be adjusted to reflect the effect of any such change.

10.05 *Claims*

A. Engineer's Decision Required: All Claims, except those waived pursuant to Paragraph 14.09, shall be referred to the Engineer for decision. A decision by Engineer shall be required as a condition precedent to any exercise by Owner or Contractor of any rights or remedies either may otherwise have under the Contract Documents or by Laws and Regulations in respect of such Claims.

B. Notice: Written notice stating the general nature of each Claim shall be delivered by the claimant to Engineer and the other party to the Contract promptly (but in no event later than 30 days) after the start of the event giving rise thereto. The responsibility to substantiate a Claim shall rest with the party making the Claim. Notice of the amount or extent of the Claim, with supporting data shall be delivered to the Engineer and the other party to the Contract within 60 days after the start of such event (unless Engineer allows additional time for claimant to submit additional or more accurate data in support of such Claim). A Claim for an adjustment in Contract Price shall be prepared in accordance with the provisions of Paragraph 12.01.B. A Claim for an adjustment in Contract Times shall be prepared in accordance with the provisions of Paragraph 12.02.B. Each Claim shall be accompanied by claimant's written statement that the adjustment claimed is the entire adjustment to which the claimant believes it is entitled as a result of said event. The opposing party shall submit

Attachment: Holly Hill LS_13 Rehabilitation_Bid Set Specifications_04.30.19 (2019-R-38 : Lift Station #13 Rehabilitation)

Copyright © 2007 National Society of Professional Engineers for EJCDC. All rights reserved.

any response to Engineer and the claimant within 30 days after receipt of the claimant's last submittal (unless Engineer allows additional time).

C. Engineer's Action: Engineer will review each Claim and, within 30 days after receipt of the last submittal of the claimant or the last submittal of the opposing party, if any, take one of the following actions in writing:

1. Deny the Claim in whole or in part;

2. Approve the Claim; or

3. Notify the parties that the Engineer is unable to resolve the Claim if, in the Engineer's sole discretion, it would be inappropriate for the Engineer to do so. For purposes of further resolution of the Claim, such notice shall be deemed a denial.

D. In the event that Engineer does not take action on a Claim within said 30 days, the Claim shall be deemed denied.

E. Engineer's written action under Paragraph 10.05.C or denial pursuant to Paragraphs 10.05.C.3 or 10.05.D will be final and binding upon Owner and Contractor, unless Owner or Contractor invoke the dispute resolution procedure set forth in Article 16 within 30 days of such action or denial.

F. No Claim for an adjustment in Contract Price or Contract Times will be valid if not submitted in accordance with this Paragraph 10.05.

ARTICLE 11 – COST OF THE WORK; ALLOWANCES; UNIT PRICE WORK

11.01 *Cost of the Work*

A. *Costs Included:* The term Cost of the Work means the sum of all costs, except those excluded in Paragraph 11.01.B, necessarily incurred and paid by Contractor in the proper performance of the Work. When the value of any Work covered by a Change Order or when a Claim for an adjustment in Contract Price is determined on the basis of Cost of the Work, the costs to be reimbursed to Contractor will be only those additional or incremental costs required because of the change in the Work or because of the event giving rise to the Claim. Except as otherwise may be agreed to in writing by Owner, such costs shall be in amounts no higher than those prevailing in the locality of the Project, shall not include any of the costs itemized in Paragraph 11.01.B, and shall include only the following items:

1. Payroll costs for employees in the direct employ of Contractor in the performance of the Work under schedules of job classifications agreed upon by Owner and Contractor. Such employees shall include, without limitation, superintendents, foremen, and other personnel employed full time on the Work. Payroll costs for employees not employed full time on the Work shall be apportioned on the basis of

Attachment: Holly Hill LS_13 Rehabilitation_Bid Set Specifications_04.30.19 (2019-R-38 : Lift Station #13 Rehabilitation)

Copyright © 2007 National Society of Professional Engineers for EJCDC. All rights reserved.

their time spent on the Work. Payroll costs shall include, but not be limited to, salaries and wages plus the cost of fringe benefits, which shall include social security contributions, unemployment, excise, and payroll taxes, workers' compensation, health and retirement benefits, bonuses, sick leave, vacation and holiday pay applicable thereto. The expenses of performing Work outside of regular working hours, on Saturday, Sunday, or legal holidays, shall be included in the above to the extent authorized by Owner.

2. Cost of all materials and equipment furnished and incorporated in the Work, including costs of transportation and storage thereof, and Suppliers' field services required in connection therewith. All cash discounts shall accrue to Contractor unless Owner deposits funds with Contractor with which to make payments, in which case the cash discounts shall accrue to Owner. All trade discounts, rebates and refunds and returns from sale of surplus materials and equipment shall accrue to Owner, and Contractor shall make provisions so that they may be obtained.

3. Payments made by Contractor to Subcontractors for Work performed by Subcontractors. If required by Owner, Contractor shall obtain competitive bids from subcontractors acceptable to Owner and Contractor and shall deliver such bids to Owner, who will then determine, with the advice of Engineer, which bids, if any, will be acceptable. If any subcontract provides that the Subcontractor is to be paid on the basis of Cost of the Work plus a fee, the Subcontractor's Cost of the Work and fee shall be determined in the same manner as Contractor's Cost of the Work and fee as provided in this Paragraph 11.01.

4. Costs of special consultants (including but not limited to engineers, architects, testing laboratories, surveyors, attorneys, and accountants) employed for services specifically related to the Work.

5. Supplemental costs including the following:

   a. The proportion of necessary transportation, travel, and subsistence expenses of Contractor's employees incurred in discharge of duties connected with the Work.

   b. Cost, including transportation and maintenance, of all materials, supplies, equipment, machinery, appliances, office, and temporary facilities at the Site, and hand tools not owned by the workers, which are consumed in the performance of the Work, and cost, less market value, of such items used but not consumed which remain the property of Contractor.

   c. Rentals of all construction equipment and machinery, and the parts thereof whether rented from Contractor or others in accordance with rental agreements approved by Owner with the advice of Engineer, and the costs of

Attachment: Holly Hill LS_13 Rehabilitation_Bid Set Specifications_04.30.19 (2019-R-38 : Lift Station #13 Rehabilitation)

Copyright © 2007 National Society of Professional Engineers for EJCDC. All rights reserved.

transportation, loading, unloading, assembly, dismantling, and removal thereof. All such costs shall be in accordance with the terms of said rental agreements. The rental of any such equipment, machinery, or parts shall cease when the use thereof is no longer necessary for the Work.

d. Sales, consumer, use, and other similar taxes related to the Work, and for which Contractor is liable, as imposed by Laws and Regulations.

e. Deposits lost for causes other than negligence of Contractor, any Subcontractor, or anyone directly or indirectly employed by any of them or for whose acts any of them may be liable, and royalty payments and fees for permits and licenses.

f. Losses and damages (and related expenses) caused by damage to the Work, not compensated by insurance or otherwise, sustained by Contractor in connection with the performance of the Work (except losses and damages within the deductible amounts of property insurance established in accordance with Paragraph 5.06.D), provided such losses and damages have resulted from causes other than the negligence of Contractor, any Subcontractor, or anyone directly or indirectly employed by any of them or for whose acts any of them may be liable. Such losses shall include settlements made with the written consent and approval of Owner. No such losses, damages, and expenses shall be included in the Cost of the Work for the purpose of determining Contractor's fee.

g. The cost of utilities, fuel, and sanitary facilities at the Site.

h. Minor expenses such as telegrams, long distance telephone calls, telephone service at the Site, express and courier services, and similar petty cash items in connection with the Work.

i. The costs of premiums for all bonds and insurance Contractor are required by the Contract Documents to purchase and maintain.

B. Costs Excluded: The term Cost of the Work shall not include any of the following items:

1. Payroll costs and other compensation of Contractor's officers, executives, principals (of partnerships and sole proprietorships), general managers, safety managers, engineers, architects, estimators, attorneys, auditors, accountants, purchasing and contracting agents, expediters, timekeepers, clerks, and other personnel employed by Contractor, whether at the Site or in Contractor's principal or branch office for general administration of the Work and not specifically included in the agreed upon schedule of job classifications referred to in Paragraph 11.01.A.1 or specifically covered by Paragraph 11.01.A.4, all of which are to be considered administrative costs covered by the Contractor's fee.

Attachment: Holly Hill LS_13 Rehabilitation_Bid Set Specifications_04.30.19 (2019-R-38 : Lift Station #13 Rehabilitation)

Copyright © 2007 National Society of Professional Engineers for EJCDC. All rights reserved.

2. Expenses of Contractor's principal and branch offices other than Contractor's office at the Site.

3. Any part of Contractor's capital expenses, including interest on Contractor's capital employed for the Work and charges against Contractor for delinquent payments.

4. Costs due to the negligence of Contractor, any Subcontractor, or anyone directly or indirectly employed by any of them or for whose acts any of them may be liable, including but not limited to, the correction of defective Work, disposal of materials or equipment wrongly supplied, and making good any damage to property.

5. Other overhead or general expense costs of any kind and the costs of any item not specifically and expressly included in Paragraphs 11.01.A.

C. Contractor's Fee: When all the Work is performed on the basis of cost-plus, Contractor's fee shall be determined as set forth in the Agreement. When the value of any Work covered by a Change Order or when a Claim for an adjustment in Contract Price is determined on the basis of Cost of the Work, Contractor's fee shall be determined as set forth in Paragraph 12.01.C.

D. Documentation: Whenever the Cost of the Work for any purpose is to be determined pursuant to Paragraphs 11.01.A and 11.01.B, Contractor will establish and maintain records thereof in accordance with generally accepted accounting practices and submit in a form acceptable to Engineer an itemized cost breakdown together with supporting data.

11.02 *Allowances*

A. It is understood that Contractor has included in the Contract Price all allowances so named in the Contract Documents and shall cause the Work so covered to be performed for such sums and by such persons or entities as may be acceptable to Owner and Engineer.

B. Cash Allowances:

1. Contractor agrees that:

a. The cash allowances include the cost to Contractor (less any applicable trade discounts) of materials and equipment required by the allowances to be delivered at the Site, and all applicable taxes; and

b. Contractor's costs for unloading and handling on the Site, labor, installation, overhead, profit, and other expenses contemplated for the cash allowances have been included in the Contract Price and not in the allowances, and no demand for additional payment on account of any of the foregoing will be valid.

Attachment: Holly Hill LS_13 Rehabilitation_Bid Set Specifications_04.30.19 (2019-R-38 : Lift Station #13 Rehabilitation)

Copyright © 2007 National Society of Professional Engineers for EJCDC. All rights reserved.

C. Contingency Allowance:

1. Contractor agrees that a contingency allowance, if any, is for the sole use of Owner to cover unanticipated costs.

D. Prior to final payment, an appropriate Change Order will be issued as recommended by Engineer to reflect actual amounts due Contractor on account of Work covered by allowances, and the Contract Price shall be correspondingly adjusted.

11.03 *Unit Price Work*

A. Where the Contract Documents provide that all or part of the Work is to be Unit Price Work, initially the Contract Price will be deemed to include for all Unit Price Work an amount equal to the sum of the unit price for each separately identified item of Unit Price Work times the estimated quantity of each item as indicated in the Agreement.

B. The estimated quantities of items of Unit Price Work are not guaranteed and are solely for the purpose of comparison of Bids and determining an initial Contract Price. Determinations of the actual quantities and classifications of Unit Price Work performed by Contractor will be made by Engineer subject to the provisions of Paragraph 9.07.

C. Each unit price will be deemed to include an amount considered by Contractor to be adequate to cover Contractor's overhead and profit for each separately identified item.

D. Owner or Contractor may make a Claim for an adjustment in the Contract Price in accordance with Paragraph 10.05 if:

1. The quantity of any item of Unit Price Work performed by Contractor differs materially and significantly from the estimated quantity of such item indicated in the Agreement; and

2. There is no corresponding adjustment with respect to any other item of Work; and

3. Contractor believes that Contractor is entitled to an increase in Contract Price as a result of having incurred additional expense or Owner believes that Owner is entitled to a decrease in Contract Price and the parties are unable to agree as to the amount of any such increase or decrease.

ARTICLE 12 – CHANGE OF CONTRACT PRICE; CHANGE OF CONTRACT TIMES

12.01 *Change of Contract Price*

A. The Contract Price may only be changed by a Change Order. Any Claim for an adjustment in the Contract Price shall be based on written notice submitted by the party making the

Attachment: Holly Hill LS_13 Rehabilitation_Bid Set Specifications_04.30.19 (2019-R-38 : Lift Station #13 Rehabilitation)

Copyright © 2007 National Society of Professional Engineers for EJCDC. All rights reserved.

Claim to the Engineer and the other party to the Contract in accordance with the provisions of Paragraph 10.05.

B. The value of any Work covered by a Change Order or of any Claim for an adjustment in the Contract Price will be determined as follows:

1. Where the Work involved is covered by unit prices contained in the Contract Documents, by application of such unit prices to the quantities of the items involved (subject to the provisions of Paragraph 11.03); or

2. Where the Work involved is not covered by unit prices contained in the Contract Documents, by a mutually agreed lump sum (which may include an allowance for overhead and profit not necessarily in accordance with Paragraph 12.01.C.2); or

3. Where the Work involved is not covered by unit prices contained in the Contract Documents and agreement to a lump sum is not reached under Paragraph 12.01.B.2, on the basis of the Cost of the Work (determined as provided in Paragraph 11.01) plus a Contractor's fee for overhead and profit (determined as provided in Paragraph 12.01.C).

C. Contractor's Fee: The Contractor's fee for overhead and profit shall be determined as follows:

1. A mutually acceptable fixed fee; or

2. If a fixed fee is not agreed upon, then a fee based on the following percentages of the various portions of the Cost of the Work:

a. For costs incurred under Paragraphs 11.01.A.1 and 11.01.A.2, the Contractor's fee shall be 15 percent;

b. For costs incurred under Paragraph 11.01.A.3, the Contractor's fee shall be five percent;

c. Where one or more tiers of subcontracts are on the basis of Cost of the Work plus a fee and no fixed fee is agreed upon, the intent of Paragraphs 12.01.C.2.a and 12.01.C.2.b is that the Subcontractor who actually performs the Work, at whatever tier, will be paid a fee of 15 percent of the costs incurred by such Subcontractor under Paragraphs 11.01.A.1 and 11.01.A.2 and that any higher tier Subcontractor and Contractor will each be paid a fee of five percent of the amount paid to the next lower tier Subcontractor;

d. No fee shall be payable on the basis of costs itemized under Paragraphs 11.01.A.4, 11.01.A.5, and 11.01.B;

Attachment: Holly Hill LS_13 Rehabilitation_Bid Set Specifications_04.30.19 (2019-R-38 : Lift Station #13 Rehabilitation)

Copyright © 2007 National Society of Professional Engineers for EJCDC. All rights reserved.

e. The amount of credit to be allowed by Contractor to Owner for any change which results in a net decrease in cost will be the amount of the actual net decrease in cost plus a deduction in Contractor's fee by an amount equal to five percent of such net decrease; and

f. When both additions and credits are involved in any one change, the adjustment in Contractor's fee shall be computed on the basis of the net change in accordance with Paragraphs 12.01.C.2.a through 12.01.C.2.e, inclusive.

12.02 *Change of Contract Times*

A. The Contract Times may only be changed by a Change Order. Any Claim for an adjustment in the Contract Times shall be based on written notice submitted by the party making the Claim to the Engineer and the other party to the Contract in accordance with the provisions of Paragraph 10.05.

B. Any adjustment of the Contract Times covered by a Change Order or any Claim for an adjustment in the Contract Times will be determined in accordance with the provisions of this Article 12.

12.03 *Delays*

A. Where Contractor is prevented from completing any part of the Work within the Contract Times due to delay beyond the control of Contractor, the Contract Times will be extended in an amount equal to the time lost due to such delay if a Claim is made therefore as provided in Paragraph 12.02.A. Delays beyond the control of Contractor shall include, but not be limited to, acts or neglect by Owner, acts or neglect of utility owners or other contractors performing other work as contemplated by Article 7, fires, floods, epidemics, abnormal weather conditions, or acts of God.

B. If Owner, Engineer, or other contractors or utility owners performing other work for Owner as contemplated by Article 7, or anyone for whom Owner is responsible, delays, disrupts, or interferes with the performance or progress of the Work, then Contractor shall be entitled to an equitable adjustment in the Contract Price or the Contract Times, or both. Contractor's entitlement to an adjustment of the Contract Times is conditioned on such adjustment being essential to Contractor's ability to complete the Work within the Contract Times.

C. If Contractor is delayed in the performance or progress of the Work by fire, flood, epidemic, abnormal weather conditions, acts of God, acts or failures to act of utility owners not under the control of Owner, or other causes not the fault of and beyond control of Owner and Contractor, then Contractor shall be entitled to an equitable adjustment in Contract Times, if such adjustment is essential to Contractor's ability to complete the Work within the Contract Times. Such an adjustment shall be Contractor's sole and exclusive remedy for the delays described in this Paragraph 12.03.C.

Attachment: Holly Hill LS_13 Rehabilitation_Bid Set Specifications_04.30.19 (2019-R-38 : Lift Station #13 Rehabilitation)

Copyright © 2007 National Society of Professional Engineers for EJCDC. All rights reserved.

D. Owner, Engineer, and their officers, directors, members, partners, employees, agents, consultants, or subcontractors shall not be liable to Contractor for any claims, costs, losses, or damages (including but not limited to all fees and charges of engineers, architects, attorneys, and other professionals and all court or arbitration or other dispute resolution costs) sustained by Contractor on or in connection with any other project or anticipated project.

E. Contractor shall not be entitled to an adjustment in Contract Price or Contract Times for delays within the control of Contractor. Delays attributable to and within the control of a Subcontractor or Supplier shall be deemed to be delays within the control of Contractor.

ARTICLE 13 – TESTS AND INSPECTIONS; CORRECTION, REMOVAL OR ACCEPTANCE OF DEFECTIVE WORK

13.01 *Notice of Defects*

A. Prompt notice of all defective Work of which Owner or Engineer has actual knowledge will be given to Contractor. Defective Work may be rejected, corrected, or accepted as provided in this Article 13.

13.02 *Access to Work*

A. Owner, Engineer, their consultants and other representatives and personnel of Owner, independent testing laboratories, and governmental agencies with jurisdictional interests will have access to the Site and the Work at reasonable times for their observation, inspection, and testing. Contractor shall provide them proper and safe conditions for such access and advise them of Contractor's safety procedures and programs so that they may comply therewith as applicable.

13.03 *Tests and Inspections*

A. Contractor shall give Engineer timely notice of readiness of the Work for all required inspections, tests, or approvals and shall cooperate with inspection and testing personnel to facilitate required inspections or tests.

B. Owner shall employ and pay for the services of an independent testing laboratory to perform all inspections, tests, or approvals required by the Contract Documents except:

1. For inspections, tests, or approvals covered by Paragraphs 13.03.C and 13.03.D below;

2. That costs incurred in connection with tests or inspections conducted pursuant to Paragraph 13.04.B shall be paid as provided in Paragraph 13.04.C; and

3. As otherwise specifically provided in the Contract Documents.

Attachment: Holly Hill LS_13 Rehabilitation_Bid Set Specifications_04.30.19 (2019-R-38 : Lift Station #13 Rehabilitation)

Copyright © 2007 National Society of Professional Engineers for EJCDC. All rights reserved.

C. If Laws or Regulations of any public body having jurisdiction require any Work (or part thereof) specifically to be inspected, tested, or approved by an employee or other representative of such public body, Contractor shall assume full responsibility for arranging and obtaining such inspections, tests, or approvals, pay all costs in connection therewith, and furnish Engineer the required certificates of inspection or approval.

D. Contractor shall be responsible for arranging and obtaining and shall pay all costs in connection with any inspections, tests, or approvals required for Owner's and Engineer's acceptance of materials or equipment to be incorporated in the Work; or acceptance of materials, mix designs, or equipment submitted for approval prior to Contractor's purchase thereof for incorporation in the Work. Such inspections, tests, or approvals shall be performed by organizations acceptable to Owner and Engineer.

E. If any Work (or the work of others) that is to be inspected, tested, or approved is covered by Contractor without written concurrence of Engineer, Contractor shall, if requested by Engineer, uncover such Work for observation.

F. Uncovering Work as provided in Paragraph 13.03.E shall be at Contractor's expense unless Contractor has given Engineer timely notice of Contractor's intention to cover the same and Engineer has not acted with reasonable promptness in response to such notice.

13.04 *Uncovering Work*

A. If any Work is covered contrary to the written request of Engineer, it must, if requested by Engineer, be uncovered for Engineer's observation and replaced at Contractor's expense.

B. If Engineer considers it necessary or advisable that covered Work be observed by Engineer or inspected or tested by others, Contractor, at Engineer's request, shall uncover, expose, or otherwise make available for observation, inspection, or testing as Engineer may require, that portion of the Work in question, furnishing all necessary labor, material, and equipment.

C. If it is found that the uncovered Work is defective, Contractor shall pay all claims, costs, losses, and damages (including but not limited to all fees and charges of engineers, architects, attorneys, and other professionals and all court or arbitration or other dispute resolution costs) arising out of or relating to such uncovering, exposure, observation, inspection, and testing, and of satisfactory replacement or reconstruction (including but not limited to all costs of repair or replacement of work of others); and Owner shall be entitled to an appropriate decrease in the Contract Price. If the parties are unable to agree as to the amount thereof, Owner may make a Claim therefore as provided in Paragraph 10.05.

D. If the uncovered Work is not found to be defective, Contractor shall be allowed an increase in the Contract Price or an extension of the Contract Times, or both, directly attributable to such uncovering, exposure, observation, inspection, testing, replacement, and

Attachment: Holly Hill LS_13 Rehabilitation_Bid Set Specifications_04.30.19 (2019-R-38 : Lift Station #13 Rehabilitation)

Copyright © 2007 National Society of Professional Engineers for EJCDC. All rights reserved.

reconstruction. If the parties are unable to agree as to the amount or extent thereof, Contractor may make a Claim therefore as provided in Paragraph 10.05.

13.05 *Owner May Stop the Work*

A. If the Work is defective, or Contractor fails to supply sufficient skilled workers or suitable materials or equipment, or fails to perform the Work in such a way that the completed Work will conform to the Contract Documents, Owner may order Contractor to stop the Work, or any portion thereof, until the cause for such order has been eliminated; however, this right of Owner to stop the Work shall not give rise to any duty on the part of Owner to exercise this right for the benefit of Contractor, any Subcontractor, any Supplier, any other individual or entity, or any surety for, or employee or agent of any of them.

13.06 *Correction or Removal of Defective Work*

A. Promptly after receipt of written notice, Contractor shall correct all defective Work, whether or not fabricated, installed, or completed, or, if the Work has been rejected by Engineer, remove it from the Project and replace it with Work that is not defective. Contractor shall pay all claims, costs, losses, and damages (including but not limited to all fees and charges of engineers, architects, attorneys, and other professionals and all court or arbitration or other dispute resolution costs) arising out of or relating to such correction or removal (including but not limited to all costs of repair or replacement of work of others).

B. When correcting defective Work under the terms of this Paragraph 13.06 or Paragraph 13.07, Contractor shall take no action that would void or otherwise impair Owner's special warranty and guarantee, if any, on said Work.

13.07 *Correction Period*

A. If within one year after the date of Substantial Completion (or such longer period of time as may be prescribed by the terms of any applicable special guarantee required by the Contract Documents) or by any specific provision of the Contract Documents, any Work is found to be defective, or if the repair of any damages to the land or areas made available for Contractor's use by Owner or permitted by Laws and Regulations as contemplated in Paragraph 6.11.A is found to be defective, Contractor shall promptly, without cost to Owner and in accordance with Owner's written instructions:

1. Repair such defective land or areas; or

2. Correct such defective Work; or

3. If the defective Work has been rejected by Owner, remove it from the Project and replace it with Work that is not defective, and

Attachment: Holly Hill LS_13 Rehabilitation_Bid Set Specifications_04.30.19 (2019-R-38 : Lift Station #13 Rehabilitation)

Copyright © 2007 National Society of Professional Engineers for EJCDC. All rights reserved.

4. Satisfactorily correct or repair or remove and replace any damage to other Work, to the work of others or other land or areas resulting there from.

B. If Contractor does not promptly comply with the terms of Owner's written instructions, or in an emergency where delay would cause serious risk of loss or damage, Owner may have the defective Work corrected or repaired or may have the rejected Work removed and replaced. All claims, costs, losses, and damages (including but not limited to all fees and charges of engineers, architects, attorneys, and other professionals and all court or arbitration or other dispute resolution costs) arising out of or relating to such correction or repair or such removal and replacement (including but not limited to all costs of repair or replacement of work of others) will be paid by Contractor.

C. In special circumstances where a particular item of equipment is placed in continuous service before Substantial Completion of all the Work, the correction period for that item may start to run from an earlier date if so provided in the Specifications.

D. Where defective Work (and damage to other Work resulting there from) has been corrected or removed and replaced under this Paragraph 13.07, the correction period hereunder with respect to such Work will be extended for an additional period of one year after such correction or removal and replacement has been satisfactorily completed.

E. Contractor's obligations under this Paragraph 13.07 are in addition to any other obligation or warranty. The provisions of this Paragraph 13.07 shall not be construed as a substitute for, or a waiver of, the provisions of any applicable statute of limitation or repose.

13.08 *Acceptance of Defective Work*

A. If, instead of requiring correction or removal and replacement of defective Work, Owner (and, prior to Engineer's recommendation of final payment, Engineer) prefers to accept it, Owner may do so. Contractor shall pay all claims, costs, losses, and damages (including but not limited to all fees and charges of engineers, architects, attorneys, and other professionals and all court or arbitration or other dispute resolution costs) attributable to Owner's evaluation of and determination to accept such defective Work (such costs to be approved by Engineer as to reasonableness) and for the diminished value of the Work to the extent not otherwise paid by Contractor pursuant to this sentence. If any such acceptance occurs prior to Engineer's recommendation of final payment, a Change Order will be issued incorporating the necessary revisions in the Contract Documents with respect to the Work, and Owner shall be entitled to an appropriate decrease in the Contract Price, reflecting the diminished value of Work so accepted. If the parties are unable to agree as to the amount thereof, Owner may make a Claim therefore as provided in Paragraph 10.05. If the acceptance occurs after such recommendation, an appropriate amount will be paid by Contractor to Owner.

Attachment: Holly Hill LS_13 Rehabilitation_Bid Set Specifications_04.30.19 (2019-R-38 : Lift Station #13 Rehabilitation)

Copyright © 2007 National Society of Professional Engineers for EJCDC. All rights reserved.

13.09 *Owner May Correct Defective Work*

A. If Contractor fails within a reasonable time after written notice from Engineer to correct defective Work, or to remove and replace rejected Work as required by Engineer in accordance with Paragraph 13.06.A, or if Contractor fails to perform the Work in accordance with the Contract Documents, or if Contractor fails to comply with any other provision of the Contract Documents, Owner may, after seven days written notice to Contractor, correct, or remedy any such deficiency.

B. In exercising the rights and remedies under this Paragraph 13.09, Owner shall proceed expeditiously. In connection with such corrective or remedial action, Owner may exclude Contractor from all or part of the Site, take possession of all or part of the Work and suspend Contractor's services related thereto, take possession of Contractor's tools, appliances, construction equipment and machinery at the Site, and incorporate in the Work all materials and equipment stored at the Site or for which Owner has paid Contractor but which are stored elsewhere. Contractor shall allow Owner, Owner's representatives, agents and employees, Owner's other contractors, and Engineer and Engineer's consultants access to the Site to enable Owner to exercise the rights and remedies under this Paragraph.

C. All claims, costs, losses, and damages (including but not limited to all fees and charges of engineers, architects, attorneys, and other professionals and all court or arbitration or other dispute resolution costs) incurred or sustained by Owner in exercising the rights and remedies under this Paragraph 13.09 will be charged against Contractor, and a Change Order will be issued incorporating the necessary revisions in the Contract Documents with respect to the Work; and Owner shall be entitled to an appropriate decrease in the Contract Price. If the parties are unable to agree as to the amount of the adjustment, Owner may make a Claim therefore as provided in Paragraph 10.05. Such claims, costs, losses and damages will include but not be limited to all costs of repair, or replacement of work of others destroyed or damaged by correction, removal, or replacement of Contractor's defective Work.

D. Contractor shall not be allowed an extension of the Contract Times because of any delay in the performance of the Work attributable to the exercise by Owner of Owner's rights and remedies under this Paragraph 13.09.

ARTICLE 14 – PAYMENTS TO CONTRACTOR AND COMPLETION

14.01 *Schedule of Values*

A. The Schedule of Values established as provided in Paragraph 2.07.A will serve as the basis for progress payments and will be incorporated into a form of Application for Payment acceptable to Engineer. Progress payments on account of Unit Price Work will be based on the number of units completed.

Attachment: Holly Hill LS_13 Rehabilitation_Bid Set Specifications_04.30.19 (2019-R-38 : Lift Station #13 Rehabilitation)

Copyright © 2007 National Society of Professional Engineers for EJCDC. All rights reserved.

14.02 *Progress Payments*

A. Applications for Payments:

1. At least 20 days before the date established in the Agreement for each progress payment (but not more often than once a month), Contractor shall submit to Engineer for review an Application for Payment filled out and signed by Contractor covering the Work completed as of the date of the Application and accompanied by such supporting documentation as is required by the Contract Documents. If payment is requested on the basis of materials and equipment not incorporated in the Work but delivered and suitably stored at the Site or at another location agreed to in writing, the Application for Payment shall also be accompanied by a bill of sale, invoice, or other documentation warranting that Owner has received the materials and equipment free and clear of all Liens and evidence that the materials and equipment are covered by appropriate property insurance or other arrangements to protect Owner's interest therein, all of which must be satisfactory to Owner.

2. Beginning with the second Application for Payment, each Application shall include an affidavit of Contractor stating that all previous progress payments received on account of the Work have been applied on account to discharge Contractor's legitimate obligations associated with prior Applications for Payment.

3. The amount of retainage with respect to progress payments will be as stipulated in the Agreement.

B. Review of Applications:

1. Engineer will, within 10 days after receipt of each Application for Payment, either indicate in writing a recommendation of payment and present the Application to Owner or return the Application to Contractor indicating in writing Engineer's reasons for refusing to recommend payment. In the latter case, Contractor may make the necessary corrections and resubmit the Application.

2. Engineer's recommendation of any payment requested in an Application for Payment will constitute a representation by Engineer to Owner, based on Engineer's observations of the executed Work as an experienced and qualified design professional, and on Engineer's review of the Application for Payment and the accompanying data and schedules, that to the best of Engineer's knowledge, information and belief:

a. The Work has progressed to the point indicated;

b. The quality of the Work is generally in accordance with the Contract Documents (subject to an evaluation of the Work as a functioning whole prior to or upon Substantial Completion, the results of any subsequent tests

Attachment: Holly Hill LS_13 Rehabilitation_Bid Set Specifications_04.30.19 (2019-R-38 : Lift Station #13 Rehabilitation)

Copyright © 2007 National Society of Professional Engineers for EJCDC. All rights reserved.

called for in the Contract Documents, a final determination of quantities and classifications for Unit Price Work under Paragraph 9.07, and any other qualifications stated in the recommendation); and

c. The conditions precedent to Contractor's being entitled to such payment appear to have been fulfilled in so far as it is Engineer's responsibility to observe the Work.

3. By recommending any such payment Engineer will not thereby be deemed to have represented that:

a. Inspections made to check the quality or the quantity of the Work as it has been performed have been exhaustive, extended to every aspect of the Work in progress, or involved detailed inspections of the Work beyond the responsibilities specifically assigned to Engineer in the Contract Documents; or

b. There may not be other matters or issues between the parties that might entitle Contractor to be paid additionally by Owner or entitle Owner to withhold payment to Contractor.

4. Neither Engineer's review of Contractor's Work for the purposes of recommending payments nor Engineer's recommendation of any payment, including final payment, will impose responsibility on Engineer:

a. To supervise, direct, or control the Work, or

b. For the means, methods, techniques, sequences, or procedures of construction, or the safety precautions and programs incident thereto, or

c. For Contractor's failure to comply with Laws and Regulations applicable to Contractor's performance of the Work, or

d. To make any examination to ascertain how or for what purposes Contractor has used the moneys paid on account of the Contract Price, or

e. To determine that title to any of the Work, materials, or equipment has passed to Owner free and clear of any Liens.

5. Engineer may refuse to recommend the whole or any part of any payment if, in Engineer's opinion, it would be incorrect to make the representations to Owner stated in Paragraph 14.02.B.2. Engineer may also refuse to recommend any such payment or, because of subsequently discovered evidence or the results of subsequent inspections or tests, revise or revoke any such payment recommendation

Attachment: Holly Hill LS_13 Rehabilitation_Bid Set Specifications_04.30.19 (2019-R-38 : Lift Station #13 Rehabilitation)

Copyright © 2007 National Society of Professional Engineers for EJCDC. All rights reserved.

previously made, to such extent as may be necessary in Engineer's opinion to protect Owner from loss because:

a. The Work is defective, or completed Work has been damaged, requiring correction or replacement;

b. The Contract Price has been reduced by Change Orders;

c. Owner has been required to correct defective Work or complete Work in accordance with Paragraph 13.09; or

d. Engineer has actual knowledge of the occurrence of any of the events enumerated in Paragraph 15.02.A.

C. Payment Becomes Due:

1. Ten days after presentation of the Application for Payment to Owner with Engineer's recommendation, the amount recommended will (subject to the provisions of Paragraph 14.02.D) become due, and when due will be paid by Owner to Contractor.

D. Reduction in Payment:

1. Owner may refuse to make payment of the full amount recommended by Engineer because:

a. claims have been made against Owner on account of Contractor's performance or furnishing of the Work;

b. Liens have been filed in connection with the Work, except where Contractor has delivered a specific bond satisfactory to Owner to secure the satisfaction and discharge of such Liens;

c. There are other items entitling Owner to a set-off against the amount recommended; or

d. Owner has actual knowledge of the occurrence of any of the events enumerated in Paragraphs 14.02.B.5.a through 14.02.B.5.c or Paragraph 15.02.A.

2. If Owner refuses to make payment of the full amount recommended by Engineer, Owner will give Contractor immediate written notice (with a copy to Engineer) stating the reasons for such action and promptly pay Contractor any amount remaining after deduction of the amount so withheld. Owner shall promptly pay

Attachment: Holly Hill LS_13 Rehabilitation_Bid Set Specifications_04.30.19 (2019-R-38 : Lift Station #13 Rehabilitation)

Copyright © 2007 National Society of Professional Engineers for EJCDC. All rights reserved.

Contractor the amount so withheld, or any adjustment thereto agreed to by Owner and Contractor, when Contractor remedies the reasons for such action.

3. Upon a subsequent determination that Owner's refusal of payment was not justified, the amount wrongfully withheld shall be treated as an amount due as determined by Paragraph 14.02.C.1 and subject to interest as provided in the Agreement.

14.03 *Contractor's Warranty of Title*

A. Contractor warrants and guarantees that title to all Work, materials, and equipment covered by any Application for Payment, whether incorporated in the Project or not, will pass to Owner no later than the time of payment free and clear of all Liens.

14.04 *Substantial Completion*

A. When Contractor considers the entire Work ready for its intended use Contractor shall notify Owner and Engineer in writing that the entire Work is substantially complete (except for items specifically listed by Contractor as incomplete) and request that Engineer issue a certificate of Substantial Completion.

B. Promptly after Contractor's notification, Owner, Contractor, and Engineer shall make an inspection of the Work to determine the status of completion. If Engineer does not consider the Work substantially complete, Engineer will notify Contractor in writing giving the reasons therefore.

C. If Engineer considers the Work substantially complete, Engineer will deliver to Owner a tentative certificate of Substantial Completion which shall fix the date of Substantial Completion. There shall be attached to the certificate a tentative list of items to be completed or corrected before final payment. Owner shall have seven days after receipt of the tentative certificate during which to make written objection to Engineer as to any provisions of the certificate or attached list. If, after considering such objections, Engineer concludes that the Work is not substantially complete, Engineer will, within 14 days after submission of the tentative certificate to Owner, notify Contractor in writing, stating the reasons therefore. If, after consideration of Owner's objections, Engineer considers the Work substantially complete, Engineer will, within said 14 days, execute and deliver to Owner and Contractor a definitive certificate of Substantial Completion (with a revised tentative list of items to be completed or corrected) reflecting such changes from the tentative certificate as Engineer believes justified after consideration of any objections from Owner.

D. At the time of delivery of the tentative certificate of Substantial Completion, Engineer will deliver to Owner and Contractor a written recommendation as to division of responsibilities pending final payment between Owner and Contractor with respect to security, operation, safety, and protection of the Work, maintenance, heat, utilities, insurance, and warranties and guarantees. Unless Owner and Contractor agree otherwise in writing and so inform

Attachment: Holly Hill LS_13 Rehabilitation_Bid Set Specifications_04.30.19 (2019-R-38 : Lift Station #13 Rehabilitation)

Copyright © 2007 National Society of Professional Engineers for EJCDC. All rights reserved.

Engineer in writing prior to Engineer's issuing the definitive certificate of Substantial Completion, Engineer's aforesaid recommendation will be binding on Owner and Contractor until final payment.

E. Owner shall have the right to exclude Contractor from the Site after the date of Substantial Completion subject to allowing Contractor reasonable access to remove its property and complete or correct items on the tentative list.

14.05 *Partial Utilization*

A. Prior to Substantial Completion of all the Work, Owner may use or occupy any substantially completed part of the Work which has specifically been identified in the Contract Documents, or which Owner, Engineer, and Contractor agree constitutes a separately functioning and usable part of the Work that can be used by Owner for its intended purpose without significant interference with Contractor's performance of the remainder of the Work, subject to the following conditions:

1. Owner at any time may request Contractor in writing to permit Owner to use or occupy any such part of the Work which Owner believes to be ready for its intended use and substantially complete. If and when Contractor agrees that such part of the Work is substantially complete, Contractor, Owner, and Engineer will follow the procedures of Paragraph 14.04.A through D for that part of the Work.

2. Contractor at any time may notify Owner and Engineer in writing that Contractor considers any such part of the Work ready for its intended use and substantially complete and request Engineer to issue a certificate of Substantial Completion for that part of the Work.

3. Within a reasonable time after either such request, Owner, Contractor, and Engineer shall make an inspection of that part of the Work to determine its status of completion. If Engineer does not consider that part of the Work to be substantially complete, Engineer will notify Owner and Contractor in writing giving the reasons therefore. If Engineer considers that part of the Work to be substantially complete, the provisions of Paragraph 14.04 will apply with respect to certification of Substantial Completion of that part of the Work and the division of responsibility in respect thereof and access thereto.

4. No use or occupancy or separate operation of part of the Work may occur prior to compliance with the requirements of Paragraph 5.10 regarding property insurance.

14.06 *Final Inspection*

A. Upon written notice from Contractor that the entire Work or an agreed portion thereof is complete, Engineer will promptly make a final inspection with Owner and Contractor and will notify Contractor in writing of all particulars in which this inspection reveals that the

Attachment: Holly Hill LS_13 Rehabilitation_Bid Set Specifications_04.30.19 (2019-R-38 : Lift Station #13 Rehabilitation)

Copyright © 2007 National Society of Professional Engineers for EJCDC. All rights reserved.

Work is incomplete or defective. Contractor shall immediately take such measures as are necessary to complete such Work or remedy such deficiencies.

14.07 *Final Payment*

A. Application for Payment:

1. After Contractor has, in the opinion of Engineer, satisfactorily completed all corrections identified during the final inspection and has delivered, in accordance with the Contract Documents, all maintenance and operating instructions, schedules, guarantees, bonds, certificates or other evidence of insurance, certificates of inspection, marked up record documents (as provided in Paragraph 6.12), and other documents, Contractor may make application for final payment following the procedure for progress payments.

2. The final Application for Payment shall be accompanied (except as previously delivered) by:

   a. All documentation called for in the Contract Documents, including but not limited to the evidence of insurance required by Paragraph 5.04.B.6;

   b. Consent of the surety, if any, to final payment;

   c. A list of all Claims against Owner that Contractor believes are unsettled; and

   d. Complete and legally effective releases or waivers (satisfactory to Owner) of all Lien rights arising out of or Liens filed in connection with the Work.

3. In lieu of the releases or waivers of Liens specified in Paragraph 14.07.A.2 and as approved by Owner, Contractor may furnish receipts or releases in full and an affidavit of Contractor that: (i) the releases and receipts include all labor, services, material, and equipment for which a Lien could be filed; and (ii) all payrolls, material and equipment bills, and other indebtedness connected with the Work for which Owner might in any way be responsible, or which might in any way result in liens or other burdens on Owner's property, have been paid or otherwise satisfied. If any Subcontractor or Supplier fails to furnish such a release or receipt in full, Contractor may furnish a bond or other collateral satisfactory to Owner to indemnify Owner against any Lien.

B. Engineer's Review of Application and Acceptance:

1. If, on the basis of Engineer's observation of the Work during construction and final inspection, and Engineer's review of the final Application for Payment and accompanying documentation as required by the Contract Documents, Engineer is satisfied that the Work has been completed and Contractor's other obligations under

Attachment: Holly Hill LS_13 Rehabilitation_Bid Set Specifications_04.30.19 (2019-R-38 : Lift Station #13 Rehabilitation)

Copyright © 2007 National Society of Professional Engineers for EJCDC. All rights reserved.

the Contract Documents have been fulfilled, Engineer will, within ten days after receipt of the final Application for Payment, indicate in writing Engineer's recommendation of payment and present the Application for Payment to Owner for payment. At the same time Engineer will also give written notice to Owner and Contractor that the Work is acceptable subject to the provisions of Paragraph 14.09. Otherwise, Engineer will return the Application for Payment to Contractor, indicating in writing the reasons for refusing to recommend final payment, in which case Contractor shall make the necessary corrections and resubmit the Application for Payment.

C. Payment Becomes Due:

1. Thirty days after the presentation to Owner of the Application for Payment and accompanying documentation, the amount recommended by Engineer, less any sum Owner is entitled to set off against Engineer's recommendation, including but not limited to liquidated damages, will become due and will be paid by Owner to Contractor.

14.08 *Final Completion Delayed*

A. If, through no fault of Contractor, final completion of the Work is significantly delayed, and if Engineer so confirms, Owner shall, upon receipt of Contractor's final Application for Payment (for Work fully completed and accepted) and recommendation of Engineer, and without terminating the Contract, make payment of the balance due for that portion of the Work fully completed and accepted. If the remaining balance to be held by Owner for Work not fully completed or corrected is less than the retainage stipulated in the Agreement, and if bonds have been furnished as required in Paragraph 5.01, the written consent of the surety to the payment of the balance due for that portion of the Work fully completed and accepted shall be submitted by Contractor to Engineer with the Application for such payment. Such payment shall be made under the terms and conditions governing final payment, except that it shall not constitute a waiver of Claims.

14.09 *Waiver of Claims*

A. The making and acceptance of final payment will constitute:

1. A waiver of all Claims by Owner against Contractor, except Claims arising from unsettled Liens, from defective Work appearing after final inspection pursuant to Paragraph 14.06, from failure to comply with the Contract Documents or the terms of any special guarantees specified therein, or from Contractor's continuing obligations under the Contract Documents; and

2. A waiver of all Claims by Contractor against Owner other than those previously made in accordance with the requirements herein and expressly acknowledged by Owner in writing as still unsettled.

Attachment: Holly Hill LS_13 Rehabilitation_Bid Set Specifications_04.30.19 (2019-R-38 : Lift Station #13 Rehabilitation)

Copyright © 2007 National Society of Professional Engineers for EJCDC. All rights reserved.

ARTICLE 15 – SUSPENSION OF WORK AND TERMINATION

15.01 *Owner May Suspend Work*

A. At any time and without cause, Owner may suspend the Work or any portion thereof for a period of not more than 90 consecutive days by notice in writing to Contractor and Engineer which will fix the date on which Work will be resumed. Contractor shall resume the Work on the date so fixed. Contractor shall be granted an adjustment in the Contract Price or an extension of the Contract Times, or both, directly attributable to any such suspension if Contractor makes a Claim therefore as provided in Paragraph 10.05.

15.02 *Owner May Terminate for Cause*

A. The occurrence of any one or more of the following events will justify termination for cause:

1. Contractor's persistent failure to perform the Work in accordance with the Contract Documents (including, but not limited to, failure to supply sufficient skilled workers or suitable materials or equipment or failure to adhere to the Progress Schedule established under Paragraph 2.07 as adjusted from time to time pursuant to Paragraph 6.04);

2. Contractor's disregard of Laws or Regulations of any public body having jurisdiction;

3. Contractor's repeated disregard of the authority of Engineer; or

4. Contractor's violation in any substantial way of any provisions of the Contract Documents.

B. If one or more of the events identified in Paragraph 15.02.A occur, Owner may, after giving Contractor (and surety) seven days written notice of its intent to terminate the services of Contractor:

1. Exclude Contractor from the Site, and take possession of the Work and of all Contractor's tools, appliances, construction equipment, and machinery at the Site, and use the same to the full extent they could be used by Contractor (without liability to Contractor for trespass or conversion);

2. Incorporate in the Work all materials and equipment stored at the Site or for which Owner has paid Contractor but which are stored elsewhere; and

3. Complete the Work as Owner may deem expedient.

Attachment: Holly Hill LS_13 Rehabilitation_Bid Set Specifications_04.30.19 (2019-R-38 : Lift Station #13 Rehabilitation)

Copyright © 2007 National Society of Professional Engineers for EJCDC. All rights reserved.

C. If Owner proceeds as provided in Paragraph 15.02.B, Contractor shall not be entitled to receive any further payment until the Work is completed. If the unpaid balance of the Contract Price exceeds all claims, costs, losses, and damages (including but not limited to all fees and charges of engineers, architects, attorneys, and other professionals and all court or arbitration or other dispute resolution costs) sustained by Owner arising out of or relating to completing the Work, such excess will be paid to Contractor. If such claims, costs, losses, and damages exceed such unpaid balance, Contractor shall pay the difference to Owner. Such claims, costs, losses, and damages incurred by Owner will be reviewed by Engineer as to their reasonableness and, when so approved by Engineer, incorporated in a Change Order. When exercising any rights or remedies under this Paragraph, Owner shall not be required to obtain the lowest price for the Work performed.

D. Notwithstanding Paragraphs 15.02.B and 15.02.C, Contractor's services will not be terminated if Contractor begins within seven days of receipt of notice of intent to terminate to correct its failure to perform and proceeds diligently to cure such failure within no more than 30 days of receipt of said notice.

E. Where Contractor's services have been so terminated by Owner, the termination will not affect any rights or remedies of Owner against Contractor then existing or which may thereafter accrue. Any retention or payment of moneys due Contractor by Owner will not release Contractor from liability.

F. If and to the extent that Contractor has provided a performance bond under the provisions of Paragraph 5.01.A, the termination procedures of that bond shall supersede the provisions of Paragraphs 15.02.B and 15.02.C.

15.03 *Owner May Terminate For Convenience*

A. Upon seven days written notice to Contractor and Engineer, Owner may, without cause and without prejudice to any other right or remedy of Owner, terminate the Contract. In such case, Contractor shall be paid for (without duplication of any items):

1. Completed and acceptable Work executed in accordance with the Contract Documents prior to the effective date of termination, including fair and reasonable sums for overhead and profit on such Work;

2. Expenses sustained prior to the effective date of termination in performing services and furnishing labor, materials, or equipment as required by the Contract Documents in connection with uncompleted Work, plus fair and reasonable sums for overhead and profit on such expenses;

3. All claims, costs, losses, and damages (including but not limited to all fees and charges of engineers, architects, attorneys, and other professionals and all court or arbitration or other dispute resolution costs) incurred in settlement of terminated contracts with Subcontractors, Suppliers, and others; and

Attachment: Holly Hill LS_13 Rehabilitation_Bid Set Specifications_04.30.19 (2019-R-38 : Lift Station #13 Rehabilitation)

Copyright © 2007 National Society of Professional Engineers for EJCDC. All rights reserved.

4. Reasonable expenses directly attributable to termination.

B. Contractor shall not be paid on account of loss of anticipated profits or revenue or other economic loss arising out of or resulting from such termination.

15.04 *Contractor May Stop Work or Terminate*

A. If, through no act or fault of Contractor, (i) the Work is suspended for more than 90 consecutive days by Owner or under an order of court or other public authority, or (ii) Engineer fails to act on any Application for Payment within 30 days after it is submitted, or (iii) Owner fails for 30 days to pay Contractor any sum finally determined to be due, then Contractor may, upon seven days written notice to Owner and Engineer, and provided Owner or Engineer do not remedy such suspension or failure within that time, terminate the Contract and recover from Owner payment on the same terms as provided in Paragraph 15.03.

B. In lieu of terminating the Contract and without prejudice to any other right or remedy, if Engineer has failed to act on an Application for Payment within 30 days after it is submitted, or Owner has failed for 30 days to pay Contractor any sum finally determined to be due, Contractor may, seven days after written notice to Owner and Engineer, stop the Work until payment is made of all such amounts due Contractor, including interest thereon. The provisions of this Paragraph 15.04 are not intended to preclude Contractor from making a Claim under Paragraph 10.05 for an adjustment in Contract Price or Contract Times or otherwise for expenses or damage directly attributable to Contractor's stopping the Work as permitted by this Paragraph.

ARTICLE 16 – DISPUTE RESOLUTION

16.01 *Methods and Procedures*

A. Either Owner or Contractor may request mediation of any Claim submitted to Engineer for a decision under Paragraph 10.05 before such decision becomes final and binding. The mediation will be governed by the Construction Industry Mediation Rules of the American Arbitration Association in effect as of the Effective Date of the Agreement. The request for mediation shall be submitted in writing to the American Arbitration Association and the other party to the Contract. Timely submission of the request shall stay the effect of Paragraph 10.05.E.

B. Owner and Contractor shall participate in the mediation process in good faith. The process shall be concluded within 60 days of filing of the request. The date of termination of the mediation shall be determined by application of the mediation rules referenced above.

C. If the Claim is not resolved by mediation, Engineer's action under Paragraph 10.05.C or a denial pursuant to Paragraphs 10.05.C.3 or 10.05.D shall become final and binding 30 days after termination of the mediation unless, within that time period, Owner or Contractor:

Attachment: Holly Hill LS_13 Rehabilitation_Bid Set Specifications_04.30.19 (2019-R-38 : Lift Station #13 Rehabilitation)

Copyright © 2007 National Society of Professional Engineers for EJCDC. All rights reserved.

1. Elects in writing to invoke any dispute resolution process provided for in the Supplementary Conditions; or

2. Agrees with the other party to submit the Claim to another dispute resolution process; or

3. Gives written notice to the other party of the intent to submit the Claim to a court of competent jurisdiction.

ARTICLE 17 – MISCELLANEOUS

17.01 *Giving Notice*

A. Whenever any provision of the Contract Documents requires the giving of written notice, it will be deemed to have been validly given if:

1. Delivered in person to the individual or to a member of the firm or to an officer of the corporation for whom it is intended; or

2. Delivered at or sent by registered or certified mail, postage prepaid, to the last business address known to the giver of the notice.

17.02 *Computation of Times*

A. When any period of time is referred to in the Contract Documents by days, it will be computed to exclude the first and include the last day of such period. If the last day of any such period falls on a Saturday or Sunday or on a day made a legal holiday by the law of the applicable jurisdiction, such day will be omitted from the computation.

17.03 *Cumulative Remedies*

A. The duties and obligations imposed by these General Conditions and the rights and remedies available hereunder to the parties hereto are in addition to, and are not to be construed in any way as a limitation of, any rights and remedies available to any or all of them which are otherwise imposed or available by Laws or Regulations, by special warranty or guarantee, or by other provisions of the Contract Documents. The provisions of this Paragraph will be as effective as if repeated specifically in the Contract Documents in connection with each particular duty, obligation, right, and remedy to which they apply.

17.04 *Survival of Obligations*

A. All representations, indemnifications, warranties, and guarantees made in, required by, or given in accordance with the Contract Documents, as well as all continuing obligations indicated in the Contract Documents, will survive final payment, completion, and

Attachment: Holly Hill LS_13 Rehabilitation_Bid Set Specifications_04.30.19 (2019-R-38 : Lift Station #13 Rehabilitation)

Copyright © 2007 National Society of Professional Engineers for EJCDC. All rights reserved.

acceptance of the Work or termination or completion of the Contract or termination of the services of Contractor.

17.05 *Controlling Law*

A. This Contract is to be governed by the law of the state in which the Project is located.

17.06 *Headings*

A. Article and paragraph headings are inserted for convenience only and do not constitute parts of these General Conditions.

END OF SECTION

Attachment: Holly Hill LS_13 Rehabilitation_Bid Set Specifications_04.30.19 (2019-R-38 : Lift Station #13 Rehabilitation)

Copyright © 2007 National Society of Professional Engineers for EJCDC. All rights reserved.

SECTION 00 70 50
RELEASE OF ALL CLAIMS

STATE OF _____

COUNTY OF _____

CITY OF _____

KNOW ALL MEN BY THESE PRESENTS, that the sum of:_____ Dollars ($_____) set out in the accompanying Estimate Statement No. _____ Final, the receipt of which is hereby acknowledged, is accepted as full and complete payment for all work done, materials furnished, and damages or claims arising under the City of Holly Hill Contract entitled _____.

WITNESSES:

_____

_____

_____
Contractor

Title:_____

(SEAL)

Taken, sworn, and subscribed to before me this _____day of _____, 20____.

_____
Notary Public Signature

_____
Notary Public (Print or Type)

(SEAL)

My commission Expires:_____

END OF SECTION

Attachment: Holly Hill LS_13 Rehabilitation_Bid Set Specifications_04.30.19 (2019-R-38 : Lift Station #13 Rehabilitation)

SECTION 00 80 00
SUPPLEMENTARY CONDITIONS

These Supplementary Conditions amend or supplement the Standard General Conditions of the Construction Contract (NSPE/ACEC Document No. C-700, 2007 edition) and other provisions of the Contract Documents as indicated below. All provisions which are not so amended or supplemented remain in full force and effect.

SC-1.01A.44 Delete the definition of *Substantial Completion* and insert the following in its place:

44. *Substantial Completion* - The Work (or a specified part thereof) has progressed to the point where, in the opinion of the ENGINEER as evidenced by ENGINEER's definitive certificate of Substantial Completion, it is sufficiently complete, in accordance with the Contract Documents and that all conditions precedent to Substantial Completion have been met in accordance with the Contract Documents, so that the Work (or specified part) can be utilized for the purposes for which it is intended. The terms "substantially complete" and "substantially completed" as applied to any Work refer to Substantial Completion thereof.

Add the following definitions at the end of Article 1 - definitions of the Standard General Conditions of the Constitutions Contracts:

SC-1.01.A.52 Compensable Delay - Any delay beyond the control and without the fault or negligence of the CONTRACTOR resulting from OWNER-caused changes in the Work, differing site conditions, suspensions of the Work, or termination for convenience by the OWNER.

SC-1.01.A.53 Correction Period - The time during which the CONTRACTOR must correct defective Work or remove defective Work from the site and replace it with non-defective Work, all at no cost to the OWNER, pursuant to paragraph 13.07 of the General Conditions, as supplemented.

SC-1.01A.54 Final Completion - The date upon which final payment is due to be paid by OWNER to CONTRACTOR.

SC-1.01A.55 Excusable Delay - Any delay beyond the control and without the fault or negligence of the CONTRACTOR, the OWNER, or any other contractor caused by events or circumstances such as, but not limited to, acts of God or of the public enemy, acts of interveners, acts of the government, fires, floods, epidemics, quarantine restrictions, freight embargoes, and hurricanes, tornadoes, or new sink holes. Labor disputes and above average rainfall shall give rise only to Inexcusable Delays.

SC-1.01A.56 Float or Slack Time - The time available in the progress schedule during which an unexpected activity can be completed without delaying the Substantial Completion of the Work.

Attachment: Holly Hill LS_13 Rehabilitation_Bid Set Specifications_04.30.19 (2019-R-38 : Lift Station #13 Rehabilitation)

SC-1.01A.57 Initiation of Operation - The date when the OWNER actually begins to use the entire Work for the purposes for which it was planned, designed and built, thus commences the Correction Period. The OWNER shall not be deemed to have accepted the Work until Initiation of Operation.

SC-1.01A.58 Modification - (a) A written amendment of the Contract Documents signed by both parties, (b) a Change Order, or (c) a Field Order. A modification may be issued after the Effective Date of the Agreement.

SC-1.01A.59 Inexcusable Delay - Any delay caused either (i) by events or circumstances within the control of the CONTRACTOR, such as inadequate crewing, slow submittals, etc., which might have been avoided by the exercise of care, prudence, foresight, or diligence on the part of the CONTRACTOR, (ii) by weather conditions (other than hurricanes and tornadoes) or (iii) labor disputes.

SC-1.01A.60 Non-prejudicial Delay - Any delay impacting a portion of the Work within the available total Float or Slack Time, as that term is used in Section 01310: Progress Schedules, and not necessarily preventing completion of the Work within the Contract Time.

SC-1.01A.61 Prejudicial Delay - Any Excusable or Compensable Delay impacting the Work and exceeding the total Float Time available in the progress schedule, thus preventing completion of the Work within the Contract Time unless the Work is accelerated.

SC-1.01A.62 Preoperational Testing (Check-Out-Testing) - All field inspections, installation checks, water tests, performance tests, and necessary corrections required of the CONTRACTOR as a condition or conditions to achieving Substantial Completion to demonstrate to the OWNER and ENGINEER that individual components of the Work have been properly constructed and operate in accordance with the Contract Documents for their intended purposes.

SC-1.01A.63 Start-Up Testing (Demonstration Testing) - A predefined trial period required as a condition to Initiation of Operation during which CONTRACTOR is to operate the entire Work (or any part thereof agreed to by the OWNER) under actual and simulated operating conditions for the purpose (i) of making such minor adjustments and changes to the Work as may be necessary for the Work to comply with the Contact Documents and (ii) of complying with the final test requirements in the Contract Documents."

SC-2.02 Modify paragraph 2.02A of the General Conditions:

A. After the Agreement has been executed, the Engineer will furnish the CONTRACTOR five (5) complete sets of Contract Documents.

SC-2.03 Delete paragraph 2.03 of the General Conditions in its entirety and insert the following in its place.

Attachment: Holly Hill LS_13 Rehabilitation_Bid Set Specifications_04.30.19 (2019-R-38 : Lift Station #13 Rehabilitation)

A. A "Notice to Proceed" may be given to the Contractor at any time after the Effective date of the Agreement. The Contract Time will commence to run on the day indicated in the Notice to Proceed. In no event will the Contract Time commence to run later than the sixtieth (60th) day after the Effective Date of the Agreement.

SC-2.05 Add the following immediately after subparagraph 2.05A.3 of the Standard General Conditions:

4. The submittals required in subparagraphs 1, 2 and 3 shall be as specified in Section 01310, 01340 and 01370, respectively.

SC-3.01 Add the following immediately after paragraph 3.01C of the Standard General Conditions:

D. When measurements are affected by conditions already established or where items are to be fitted into construction conditions, it shall be the CONTRACTOR's responsibility to verify all such dimensions at the site and the actual job dimensions shall take precedence over scale and figure dimensions on the Drawings.

E. The CONTRACTOR shall carefully study and compare all Drawings, Specifications and other instructions; shall test all figures on the Drawings before laying out the Work; shall notify the ENGINEER of all errors, inconsistencies, or omissions which he may discover; and obtain specific instructions before proceeding with the Work. The CONTRACTOR shall not take advantage of any apparent error or omissions which may be found in the Drawings or Specifications, and the ENGINEER shall be entitled to make such corrections therein and interpretations thereof as may be deemed necessary for the fulfillment of their intent. The CONTRACTOR shall be responsible for all errors in construction which could have been avoided by such examination and notification and shall correct, at its own expense, all Work improperly constructed through failure to notify the ENGINEER and request specific instructions.

Attachment: Holly Hill LS_13 Rehabilitation_Bid Set Specifications_04.30.19 (2019-R-38 : Lift Station #13 Rehabilitation)

SC3.03 Add the following immediately after paragraph 3.03B of the Standard General Conditions:

C. Order of Precedence of Contract Documents:

1. In resolving differences resulting from conflicts, errors or discrepancies in any of the following Contract Documents, the order of precedence shall be as follows:

   a. Permits
   b. Change Orders
   c. Contract Agreement
   d. Specification
   e. Drawings

2. Within the Specifications, the order of precedence is as follows:

   a. Addenda
   b. Notice to Bidders
   c. Instructions to Bidders
   d. Supplementary General Conditions
   e. General Conditions
   f. Division 1, General Requirements
   g. Technical Specifications
   h. Referenced Standard Specifications

3. With reference to the Drawings, the order of precedence is as follows:

   a. Figures govern over Scaled Dimensions
   b. Detail Drawings govern over General Drawings
   c. Change Order Drawings govern over Contract Drawings
   d. Contract Drawings Govern over Standard or Shop Drawings

SC-4.03 Change the first sentence "Contractor shall promptly". Add "The CONTRACTOR shall, within three (3) days, after becoming aware thereof..."

SC-4.06 Add a new paragraph immediately after paragraph 4.06 I. of the Standard General Conditions which is to read as following:

J. No claim of the CONTRACTOR under paragraphs 4.02, 4.04 and 4.06 shall be allowed unless, (1) the CONTRACTOR has given the notice required in sub-paragraph 4.06D, and (2) within thirty (30) days (but before final payment) after the CONTRACTOR has given written notice, the CONTRACTOR submits to the OWNER a detailed claim setting forth the CONTRACTOR's right to an increase in the Contract Price or extension of

Attachment: Holly Hill LS_13 Rehabilitation_Bid Set Specifications_04.30.19 (2019-R-38 : Lift Station #13 Rehabilitation)

the Contract Time as provided in Articles 11 and 12 of the Standard General Conditions.

SC-5.01 Add a new paragraph immediately after paragraph 5.01 B. Of the Standard General Conditions which is to read as follows:

1. The following requirements shall be met by all surety companies furnishing bid, performance, payment or other type of Bonds:

   a. The Surety shall be rated as "A" or better as to General Policyholders Rating and Class X or better as to Financial Category by Best's Key Rating Guide, published by Alfred M. Best Company, Inc., 75 Fulton Street, New York, New York, 10038.

   All Surety Companies are subject to approval and may be rejected by the OWNER without cause.

2. Limitations: Bonding limits or bonding capacity refers to the limit or amount of Bond acceptable on any one (1) risk.

   a. The bonding limit of the Surety shall not exceed ten percent (10%) of the policyholder surplus (capital and surplus) as listed by the aforementioned Best's Key Rating Guide, on any one risk (penalty or amount of any one bond).

3. Requirements:

   a. Policyholders surplus is required to be five (5) times the amount of any one bond.

   b. The Agent countersigning the bond shall be resident in the County where the Project is located and/or other counties that are acceptable to the OWNER.

SC-5.01 Add a new paragraph immediately after paragraph 5.01C of the Standard General Conditions which read as follows:

D. Contractor shall pay Owner all losses, damages, expenses, costs, and attorney's fees, including but not limited to any appellate proceedings, which the Owner sustains because of default by the Contractor under the contract.

SC-5.04A In the case of a conflict between paragraph 5.04A of Section 00700 and one or more of the provisions of Section 00800A, the provisions of 00800A shall prevail.

SC-5.05A Delete paragraph 5.05A of the Standard General Conditions in its entirety.

Attachment: Holly Hill LS_13 Rehabilitation_Bid Set Specifications_04.30.19 (2019-R-38 : Lift Station #13 Rehabilitation)

SC-5.06A Delete paragraph 5.06 of the Standard General Conditions in its entirety and insert the following in its place:

A. CONTRACTOR shall purchase and maintain property insurance upon the Work at the site in the amount of the full replacement cost thereof (subject to such deductible amounts as may be provided in these Supplementary Conditions or required by Laws and Regulations). This insurance shall:

1. Include the interests of OWNER, CONTRACTOR, Subcontractors, ENGINEER, ENGINEER's Consultants and any other persons or entities identified in the Supplementary Conditions, each of whom is deemed to have an insurable interest and shall be listed as an insured or additional insured;

2. Be written on a Builder's Risk "all-risk" or open peril or special causes of loss policy form that shall at least include insurance for physical loss and damage to the Work, temporary buildings, false work and Work in transit and shall insure against at least the following perils; fire, lightning, extended coverage, theft, vandalism and malicious mischief, earthquake, hurricanes, flood, tornadoes, collapse, debris removal, demolition occasioned by enforcement of Laws and Regulations, water damage, and such other perils as may be specifically required by the Supplementary Conditions.

3. Include expenses incurred in the repair or replacement of any insured property (including but not limited to fees and charges of engineers and architects);

4. Cover materials and equipment in transit for incorporation in the Work or stored at the site or at another location provided that such materials and equipment are to be included in an Application for Payment.

5. Allow for partial utilization of the Work by Owner;

6. Include testing and startup; and

7. Be maintained in effect until the later of the two; Initiation of Operation or Final Completion, unless otherwise agreed to in writing by OWNER, CONTRACTOR and ENGINEER with thirty (30) days written notice to each other additional insured to whom a certificate of insurance has been issued.

The policies of insurance required to be purchased and maintained by CONTRACTOR in accordance with this paragraph 5.06 shall comply with the requirements of Section 00800A.

Attachment: Holly Hill LS_13 Rehabilitation_Bid Set Specifications_04.30.19 (2019-R-38 : Lift Station #13 Rehabilitation)

SC-5.06B Delete paragraph 5.06B of the Standard General Conditions in its entirety.

SC-5.06D Delete paragraph 5.06D of the Standard General Conditions in its entirety.

SC-5.06E Delete paragraph 5.06E of the Standard General Conditions in its entirety.

SC-5.07 Delete paragraph 5.07 of the Standard General Conditions in its entirety.

SC-5.10 Delete paragraph 5.10 of the Standard General Conditions in its entirety and insert the following in its place:

A. The CONTRACTOR shall maintain all insurance as required in Paragraph 5.06A for the Work and allow OWNER to occupy or use a portion or portions of the Work prior to Substantial Completion. CONTRACTOR shall make appropriate provisions with insurers providing the proper endorsements, if required. The property insurance shall not be canceled or permitted to lapse on account of any such partial use or occupancy.

SC-6.01 Add the following sub-paragraphs immediately after paragraph 6.01B of the Standard General Conditions which are to read as follow:

C. The Owner reserves the right to review and approve the resident superintendent.

SC-6.02 Add the following sub-paragraphs immediately after paragraph 6.02B of the Standard General Conditions which are to read as follow:

C. Maintenance work may be performed during hours other than regular working hours. Regular working hours are defined as daylight hours between one-half hours after sunrise to one-half hour before sunset but not more than eight (8) hours per day at 5 days per week or ten (10) hours per day at 4 days per week totaling forty (40) hours per week during weekdays. Requests to Work during other regular working hours must be submitted to the OWNER at least seventy-two (72) hours in advance of the period proposed for such irregular working hours and shall set forth the proposed schedule for such hours to give the OWNER ample time to arrange for its personnel to be at the site of the Work.

D. The OWNER will pay for charges of ENGINEER and construction observation performed during regular working hours. The CONTRACTOR shall pay for additional engineering and construction observations charges required during irregular hours which may be authorized under the provisions of paragraph SC-6.02C. The rate paid to the OWNER by the CONTRACTOR for additional engineering and construction observation changes shall be in accordance with the existing Contract between the OWNER and ENGINEER.

Attachment: Holly Hill LS_13 Rehabilitation_Bid Set Specifications_04.30.19 (2019-R-38 : Lift Station #13 Rehabilitation)

E. The CONTRACTOR shall also pay for the costs of additional engineering charges and construction observation required during the correction of defective Work. Such additional costs incurred during irregular working hours and during the correction of defective Work, shall be a subsidiary obligation of the CONTRACTOR and no extra payment shall be made by the OWNER on account of such Work.

SC-6.06 Delete paragraphs 6.06A and 6.06B of the Standard General Conditions and insert the following in its place:

A. The CONTRACTOR shall not employ any Subcontractor, Supplier or other person or organization (including those who are to furnish the principal items of materials or equipment), whether initially or as a substitute, against whom OWNER may have reasonable objection and shall not be required to employ as a Subcontractor, Supplier or any person or organization against whom the CONTRACTOR has reasonable objection. A Subcontractor, Supplier or other person or organization identified in the CONTRACTOR's Bid and not objected to in writing by OWNER prior to the execution of the Agreement will be deemed acceptable to OWNER. All other Subcontractors shall be deemed to have been accepted if the OWNER delivers no written objection thereto within forty-five (45) days after CONTRACTOR's written identification of such Subcontractors.

B. However, if the OWNER has reasonable objection to any Subcontractor identified in the Bid or subsequently, the CONTRACTOR shall submit an acceptable substitute without entitlement to any change in Contract Price. If the OWNER demands the substitution of a Subcontractor at any time without having reasonable objection to such Subcontractor, the CONTRACTOR shall comply and shall be entitled to change in Contract Price (by appropriate Change Order or Written Amendment) for the difference in cost occasioned by such substitution. After acceptance by the OWNER, the CONTRACTOR shall make no substitution without written approval of the OWNER, which may be granted or withheld at OWNER's sole discretion. No acceptance by the OWNER of any such Subcontractor, Supplier or other person or organization shall constitute a waiver of any right of the OWNER to reject defective work.

SC-6.08 Add the following to the end of paragraph 6.08 in the Standard General Conditions:

B. "The OWNER, prior to the advertisement of the Project, has applied for or has secured permits and/or licenses for the Project as described in “Location, Scope and Special Requirements."

SC-6.11 Add new sub-paragraphs immediately after paragraph 6.11A.3 of the Standard General Conditions which are to read as follows:

Attachment: Holly Hill LS_13 Rehabilitation_Bid Set Specifications_04.30.19 (2019-R-38 : Lift Station #13 Rehabilitation)

A. Use of OWNER's property by the CONTRACTOR for storage of materials and equipment will be negotiated.

B. Use of the OWNER's existing washrooms, lavatories, sanitary facilities or plumbing fixtures by the CONTRACTOR or any of its employees or Subcontractors will not be permitted.

SC-6.13 Add the following at the end of Paragraph A:

The Engineer is not responsible for the safety of any person on the jobsite other than the Engineer's own employees. The Contractor is responsible for construction means, methods, sequences, testing, techniques and procedures necessary for performing, superintending or coordinating all portions of the work in accordance with the contract documents and any health or safety precautions required by the contract documents and/or any regulatory agencies. The Engineer has no authority to exercise any control over any construction contractor or other entity or their employees in connection with their work or any health or safety precautions. The Engineer does not have the authority to stop the work of any construction contractor. The Owner agrees that the Contractor is solely responsible for jobsite safety, and warrants that this intent shall be made evident in the Owner's agreement with the Contractor. The Owner agrees that the Engineer shall be entitled to indemnification from the Contractor for any loss incurred by the Engineer arising out of any claim brought by any person or personal injuries sustained on the jobsite and warrants that this intent shall be made evident in the Owner's agreement with the Contractor. The Engineer shall be made an additional insured under the Contractor's general liability insurance policy for personal injuries to any person sustained on the jobsite.

SC-6.13 The CONTRACTOR's obligations under paragraph 6.13 of the Standard General Conditions shall continue after the date of Substantial Completion until the Initiation of Operation.

Add the following paragraph after paragraph 6.13F of the Standard General Conditions:

G. "The CONTRACTOR shall be completely responsible for any tanks, wet wells or similar structures that may become buoyant during the construction and modification operations due to the ground water or floods and before the structure is put into operation. If there is any possibility of buoyancy of a structure, the CONTRACTOR shall take the necessary steps to prevent its buoyancy either by increasing the structures weight, by filling it with approved material or other acceptable methods. The proposed final structures have been designed against buoyancy; however, during various construction stages, methods employed by the CONTRACTOR and other conditions which may affect the buoyancy, the CONTRACTOR shall take the necessary precautions against buoyancy. Damage to any structures due to floating or

Attachment: Holly Hill LS_13 Rehabilitation_Bid Set Specifications_04.30.19 (2019-R-38 : Lift Station #13 Rehabilitation)

flooding shall be repaired or the structures replaced at the CONTRACTOR's expense."

SC-6.17 Add the following paragraph after 6.17D.3 in the Standard General Conditions:

4. Shop Drawings and other submittal data shall be reviewed by the ENGINEER for each original submittal and first resubmittal; thereafter, the CONTRACTOR shall reimburse OWNER for services rendered by ENGINEER for review time of subsequent resubmittals.

SC-6.19 Add the following after paragraph 6.19C.

D. Contractor warrants that (1) the supplies to be provided to the City pursuant to this Agreement are fit and sufficient for the purpose intended; (2) the supplies are merchantable, of good quality, and free from defects, whether patent or latent, in material or workmanship, and (3) the supplies sold to the City pursuant to this Agreement conform to the standards required by this Contract.

The Contractor further warrants that the Contractor has title to the supplies provided, in that the supplies are free and clear of all liens encumbrances, and other security interests. All warranties made in this Agreement, together with service warranties and guarantees, shall run to the City and its successors and assigns.

E. Additional Warranties – Contractor further expressly warrants the manufacturer must provide a one (1) year Warranty on equipment. This shall cover 100% of all component failures due to defects in workmanship or repeated use. Routine maintenance is not included. Warranty claims shall be handled by manufacturer or distributor. This is a minimum acceptable warranty. Warranty will be considered in bid award.

SC-6.20A In the event of a conflict between this paragraph and other provisions of the Contract Documents, this paragraph shall control.

SC-6.20B Delete paragraph 6.20B of the Standard General Conditions in its entirety and insert the following in its place:

B. The Contractor agrees not to bring any claim, suite, action or other legal proceeding against the engineer and its consultants that may arise out of or in connection with the Work or this agreement. The Engineer and its consultants are intended third-party beneficiaries of this covenant not to sue, and are entitled to enforce this covenant in law or in equity.

SC-7.02 Delete paragraph 7.02 of the Standard General Conditions in its entirety and insert the following in its place:

Attachment: Holly Hill LS_13 Rehabilitation_Bid Set Specifications_04.30.19 (2019-R-38 : Lift Station #13 Rehabilitation)

7.02 A. The parties expressly acknowledge that the Work to be done contractors.

1. The CONTRACTOR shall cooperate with all other contractors who may be performing Work on behalf of the OWNER in the vicinity of the Work to be done under this contract, and he shall conduct his operation as to interfere to the least possible extent with the Work of such contractor.

2. The CONTRACTOR shall promptly make good, at its own expense, any injury or damage that may be caused by it to other contractors, employees or subcontractors or suppliers thereof.

3. Any difference or conflict which may arise between the CONTRACTOR and other contractors in regard to their respective Work shall be adjusted and determined by the OWNER.

4. If the Work is delayed because of any acts of omissions of any other contractor, the CONTRACTOR shall have no claim against the OWNER on that account.

SC-8.06 Delete paragraph 8.06 of the Standard General Conditions in its entirety.

SC-9.08 Delete paragraphs 9.08A-C in their entirety and insert the following:

A. ENGINEER will be the initial interpreter of the requirements of the Contract Documents and judge of the acceptability of the Work there under. Claims, disputes and other matters relating to requirements of the Contract Documents pertaining to the performance and furnishing of the Work and Claims under Articles 11 and 12 in respect of changes in the Contract Price or Contract Times will be referred initially to ENGINEER in writing with a request for a formal decision in accordance with this paragraph. Written notice of each such claim, dispute or other matter will be delivered by the claimant to ENGINEER and the other party to the Agreement promptly (but in no event later than thirty (30) days) after the start of the occurrence or event giving rise thereto, and written supporting data will be submitted to ENGINEER and the other party within sixty (60) days after the start of such occurrence or event unless ENGINEER allows an additional period of time for the submission of additional or more accurate data in support of such claim, dispute or other matter. The opposing party shall submit any response to ENGINEER and the claimant within thirty (30) days after receipt of the claimant's last submittal (unless ENGINEER allows additional time). ENGINEER will render a formal decision in writing within thirty (30) days after receipt of the opposing party's submittal, if any, in accordance with this paragraph. ENGINEER's written decision on such claim, dispute or other matter will be final and binding upon OWNER and CONTRACTOR unless a written notice of intention to appeal from ENGINEER's written decision is delivered by OWNER or CONTRACTOR to the other and to ENGINEER

Attachment: Holly Hill LS_13 Rehabilitation_Bid Set Specifications_04.30.19 (2019-R-38 : Lift Station #13 Rehabilitation)

within thirty (30) days after the date of such decision and a formal proceeding is instituted by the appealing party in a forum of competent jurisdiction to exercise such rights or remedies as the appealing party may have with respect to such claim, dispute or other matter in accordance with applicable Laws and Regulations within sixty (60) days of the date of such decision, unless otherwise agreed in writing by OWNER and CONTRACTOR.

SC-9.08 Re-letter paragraph 9.08D as 9.08B.

SC-9.08 Add the following sentences to the end of paragraph 9.08B of the Standard General Conditions:

"No action, either at law or at equity, shall be brought in connection with any such claim, dispute or other matter later than thirty (30) days after the date on which the ENGINEER has rendered such written decision in respect thereof. Failure to bring an action within said thirty (30) day period shall result in ENGINEER's decision being final and binding upon the OWNER and the CONTRACTOR. In no event may any such action be brought after the time at which instituting such proceedings would be otherwise barred by the applicable statute of limitations."

SC-9.09 Delete paragraph 9.09 of the Standard General Conditions in its entirety.

SC-10.01 Delete paragraph 10.01 A of the Standard General Conditions in its entirety and insert the following in its place:

A. Without invalidating the Agreement, and without notice to any Surety, OWNER may, at any time or from time to time, order additions, deletions or revisions in the Work; these will be authorized by Change Orders. The CONTRACTOR shall not proceed with any Change Order until the OWNER and Engineer have signed and delivered to the CONTRACTOR the written Change Order. Upon receipt of a Change Order, CONTRACTOR shall proceed with the Work involved. All such Work shall be executed under the applicable conditions of the Contract Documents. If any Change Order causes an increase or decrease in the Contract Price or an extension or shortening of the Contract Time, an equitable adjustment will be made as provided in Article 11 or Article 12 on the basis of a claim made by either party.

SC-12.02 Delete paragraphs 12.02A and 12.02B of the Standard General Conditions in its entirety and insert the following in its place:

A. The Contract Time may be changed only by a Change Order or a Written Amendment. Any claim for an extension or shortening in the Contract Time shall be based on written notice delivered to the OWNER and ENGINEER within fifteen (15) days from detection or the beginning of any event or

Attachment: Holly Hill LS_13 Rehabilitation_Bid Set Specifications_04.30.19 (2019-R-38 : Lift Station #13 Rehabilitation)

circumstance giving rise to an Excusable or Compensable Delay and setting forth the general nature of the cause of delay. Within thirty (30) days of any such detection or beginning of event, the CONTRACTOR shall provide the analysis and documentation required to ascertain the facts, as specified in Section 01310: Progress Schedules and shall provide a written statement that the adjustment claimed is the entire adjustment to which the CONTRACTOR has reason to believe it is entitled as a result of the occurrence of said event. No claim by the CONTRACTOR under this provision shall be allowed unless the CONTRACTOR has given the notice and the analysis and documentation required in this paragraph, or if asserted after final payment, as defined in paragraph 14.07 of the Standard General Conditions.

B. No forfeiture due to delay shall be made because of any Excusable and Prejudicial Delays in the completion of the entire Work or a specified part thereof. Any such delays shall not entitle the CONTRACTOR to any change in Contract Price. The sole remedy of the CONTRACTOR shall be an extension of the Contract Time pursuant to this Article and the provisions of Section 01310: Progress Schedules.

C. No forfeiture due to delay shall be made because of any Compensable and Prejudicial Delays in the completion of the Work or a specified part thereof. Any such delays will entitle the CONTRACTOR solely to an extension of the Contract Time pursuant to this Article and the provisions of Section 01310: Construction Progress Schedules, of the General Requirements.

D. No extensions of Contract Time or increases in Contract Price shall be granted for Non-prejudicial Delays of any type or for Inexcusable Delays, unless otherwise agreed to by the OWNER at his sole discretion.

SC-12.06 Paragraph 12.06B is hereby revised to provide equitable adjustment in contract time only; not contract price.

SC-13.03 Delete Paragraph 13.03B and sub-paragraphs 1, 2 and 3 in their entirety and insert the following:

B. Payment of testing and laboratory services is specified in Section 01410; Testing and Laboratory Services for inspections and tests required by the Contract Documents. CONTRACTOR shall pay for inspections, tests or approvals covered by paragraph 13.03C. Costs incurred in connection with tests or inspections conducted pursuant to paragraph 13.04B shall be paid as provided in said paragraph 13.04B.

SC-13.04 Amend paragraph 13.04C of the Standard General Conditions to read as follows:

"…replacement of Work of others), and any additional expenses experienced by OWNER due to delays to other contractors, an appropriate deductive Change Order

Attachment: Holly Hill LS_13 Rehabilitation_Bid Set Specifications_04.30.19 (2019-R-38 : Lift Station #13 Rehabilitation)

shall be issued. The CONTRACTOR shall further bear the responsibility for maintaining the schedule and will be excluded from a time extension and the recovery of delay damages due to the uncovering. If, the parties…"

SC-13.06 Add the following new paragraph immediately after paragraph 13.06B of the Standard General Conditions:

C. CONTRACTOR warrants and guarantees to OWNER and ENGINEER that all Work will be in accordance with the Contact Documents and will not be defective. The CONTRACTOR shall not be entitled to an extension of Contract Time for correcting or removing defective Work.

SC-13.07 Add the following new sub-paragraph immediately after sub-paragraph 13.07A.4:

5. When deemed necessary by OWNER, CONTRACTOR shall furnish and install at no cost to OWNER, such temporary equipment and material necessary to maintain functionality of the Work while defective Work is being corrected or replaced.

Add the following new paragraphs immediately after paragraph 13.07E:

F. Subject to adjustments as described in sub-paragraph 13.07G, the period during which the CONTRACTOR must correct defective Work or remove it from the site and replace it with non-defective Work, all at no cost to the OWNER (the "Correction Period"), shall be no more than one (1) year. If the date of Substantial Completion is not the same date as Initiation of Operation, such Correction Period shall commence upon Initiation of Operation, not upon the date of Substantial Completion. In such cases, the time between Substantial Completion and Initiation of Operation shall not exceed one hundred (100) days.

G. No later than thirty (30) days before Initiation of Operation the OWNER shall notify the CONTRACTOR in writing of the date upon which Initiation of Operation is expected to occur, and the CONTRACTOR shall ensure that the Work is ready in its entirety by such date for use by the OWNER as contemplated in the Contract Documents.

H. From the date of Substantial Completion until Initiation of Operation, the CONTRACTOR shall bear all risks of injury, loss, or damage to any part of the Work arising from the elements or from any other cause. The CONTRACTOR shall rebuild, repair, restore, and make good at no cost to the OWNER, all injuries, losses, or damage to any portion of the Work occasioned by any cause and shall, at no expense to the OWNER, provide suitable drainage and erect such temporary structures and take all other actions as are necessary for the protection of the Work. Suspension of the Work or the granting of an extension of the Contract Time for any cause shall

Attachment: Holly Hill LS_13 Rehabilitation_Bid Set Specifications_04.30.19 (2019-R-38 : Lift Station #13 Rehabilitation)

not relieve the CONTRACTOR of its responsibility for the Work as herein specified. The CONTRACTOR's responsibilities under this paragraph 13.07 are in addition to, not in lieu of, all other obligations imposed by these Contract Documents.

I. At the OWNER's sole option, the Correction Period may be extended or shortened. The Contract Price shall be adjusted accordingly as provided in paragraphs 11 and 12 of the Standard General Conditions.

SC-14.02.A.1 Add the following sentence to end of paragraph 14.02 A.1:

Payment to Contractor for stored materials shall be the Owner's option and at the Owner's sole discretion.

SC-14.02 Add the new sub-paragraph immediately after sub-paragraph 14.02A.3:

4. Each monthly Application for Payment shall incorporate the corresponding "Monthly Progress Status Report" prepared per the requirements of Section 01310: Progress Schedules.

SC-14.02.C.1 This section is hereby deleted. The requirements of Florida Statute 218.735(a) of the Florida Prompt Payment Act shall apply.

SC-14.04.A Delete paragraph 14.04.A in its entirety and insert the following in its place:

A. After all requirements of Section 01700: Contract Closeout have been met with respect to Substantial Completion, and when the CONTRACTOR considers the entire Work ready for its intended use, CONTRACTOR shall notify OWNER and ENGINEER in writing that the entire Work is substantially complete (except for items specifically listed by CONTRACTOR as incomplete) and request that ENGINEER issue a certificate of Substantial Completion.

SC-15.01 Add a new subparagraph immediately after paragraph 15.01A of the Standard General Conditions to read as follows:

1. Notwithstanding this paragraph 15.01A, if the OWNER stops Work under paragraph 13.05 or suspends the CONTRACTOR's services under paragraph 13.09 of the Standard General Conditions, or suspends the Work or any portion thereof because of the CONTRACTOR's failure to prosecute the Work without endangering persons and property, the CONTRACTOR shall not be entitled to an extension of Contract Time or increase in Contract Price.

SC-16 Delete Article 16 and all other references to "Dispute Resolution Agreement" in the Standard General Conditions. Disputes between OWNER and CONTRACTOR shall be arbitrated only if and to the extent agreed to by the parties at the time each dispute

Attachment: Holly Hill LS_13 Rehabilitation_Bid Set Specifications_04.30.19 (2019-R-38 : Lift Station #13 Rehabilitation)

arises. The CONTRACTOR shall carry on the Work and maintain the progress schedule during any dispute, regardless of how resolved, unless otherwise mutually agreed in writing. Venue for any litigation, at law or equity or arbitration, shall lie exclusively in the place of Volusia County, Florida. This Contract, or any provision hereof, shall be construed and interpreted, and any litigation arising there from, shall be governed by the laws of the State of Florida.

SC-17.06 Add the following paragraph immediately after paragraph 17.05 of the General Conditions which are to read as follows:

17.06 The form of all submittals, notices, change orders and other documents permitted or required to be used or transmitted under the Contract Documents shall be determined by the ENGINEER. The forms for Notice to Proceed, Notice of Award and others, which the ENGINEER may use, are contained in the subsequent pages of these Supplementary Conditions.

END OF SECTION

Attachment: Holly Hill LS_13 Rehabilitation_Bid Set Specifications_04.30.19 (2019-R-38 : Lift Station #13 Rehabilitation)

SECTION 00 80 00-A

CONTRACTORS STANDARD INSURANCE REQUIREMENTS AND INDEMNIFICATION CLAUSE

I. INSURANCE

A. Prior to commencing work, the Contractor shall provide at his own cost and expense insurance to the City of HOLLY HILL as required below. The insurance companies must be licensed in the State of Florida and be rated by A.M. Best as A: Class X or better. The required insurance shall be evidenced by certificates and/or policies as determined by the City. All policies and certificates of insurance shall be approved by the City prior to inception of any work.

B. It is required that each Certificate of Insurance and/or policy must give 30 days prior written notice of cancellation, non-renewal or adverse change to the City of HOLLY HILL Finance Department by registered mail, return receipt requested. All such notices shall name the Contractor and identify the contract number.

C. The "City of HOLLY HILL," wherever used, shall be defined to include the City itself, elected officials, officers, employees, volunteers, representatives, agents and any affiliates.

D. The "Contractor," wherever used, shall be defined to include the Contractor, any subsidiaries or affiliates, officers, employees, volunteers, representatives, agents, contractors and subcontractors.

E. If at any time any of the required policies shall be or shall become unsatisfactory to the City as to form or substance, or if the insurance company becomes unsatisfactory to the City, the Contractor shall, upon written notice to that effect from the City, promptly obtain a new policy, submit the policy to the City for approval, and submit the Certificate of Insurance, as previously required.

If at any time the Contractor shall fail to furnish and/or maintain the required insurance, this contract may be declared suspended, discontinued or terminated, at the discretion of the City. Failure of the Contractor to take out and/or maintain any of the required insurances shall not relieve the Contractor from any liability under the contract, nor shall the insurance requirements be construed to conflict with or otherwise limit the obligations of the Contractor concerning indemnification.

F. The Contractor is required to provide new Certificates of Insurance to the City at least 20 days prior to the coverage renewal dates. If any of the insurance requirements are not complied with at their renewal dates, the City may at their option, (1) withhold payments to the Contractor until those requirements have been met or, (2) pay the renewal premium and withhold such payments from any monies due the Contractor.

G. In the event of any claims having been filed due to any operation under this contract that are in excess of the insured amounts, the excess amount of such claim, or any portion thereof, may be withheld from payments due the Contractor until such time as the Contractor shall furnish such additional security covering such claims as may be determined by the City of HOLLY HILL

Attachment: Holly Hill LS_13 Rehabilitation_Bid Set Specifications_04.30.19 (2019-R-38 : Lift Station #13 Rehabilitation)

H. The Contractor shall provide the following insurance on forms no more restrictive than the latest edition of those filed by the Insurance Services Office, and name the "City of HOLLY HILL" (as defined in "C" above) as an Insured to the extent of the City's interests.

II. LIABILITY INSURANCE

A. **WORKERS' COMPENSATION - STATUTORY** - in compliance with the Workers' Compensation law of the State of Florida including employers liability coverage of at least $100,000. If any operations are to be undertaken on or about navigable waters, coverage must be included for the U.S. Longshoremen and Harbor Workers Acts and Jones Act.

B. **COMMERCIAL GENERAL LIABILITY** - with minimum limits of:

$2,000,000	General Aggregate
$1,000,000	Products - Completed Operations Aggregate
$1,000,000	Personal and Advertisement Injury
$1,000,000	Each Occurrence
$ 100,000	Fire Damage

C. **BUSINESS AUTOMOBILE LIABILITY** - with minimum limits of $1,000,000 per occurrence combined single limit. This insurance shall include for bodily injury and property damages the following coverage's:

(1) Owned Automobiles

(2) Hired Automobiles

(3) Non-owned Automobiles

(4) Employee Non-ownership

NOTE! The required limits of liability for the above policies may include umbrella insurance with the umbrella policy making up the difference between the policy limits of the underlying policies and the total amount of coverage required. Such Umbrella Liability insurance shall be a "follow form" and be at least as broad as the underlying policies.

III. PROPERTY INSURANCE

When this contract includes construction of and/or additions to above-ground buildings or structures, Builder's Risk and/or Installation Floater policies must be provided as follows:

A. **BUILDER'S RISK** - "All risk" form in the amount of 100% of the completed value of such addition, building or structure to include personal property of others in the care, custody or control of the Contractor, and shall include a flat-premium endorsement.

(1) Maximum Deductible - $5,000 each claim

Attachment: Holly Hill LS_13 Rehabilitation_Bid Set Specifications_04.30.19 (2019-R-38 : Lift Station #13 Rehabilitation)

(2) Certified Copy of the policy must be provided to the City prior to the commencement of work.

(3) Waiver of Occupancy Clause or Warranty - to provide that the Builder's Risk coverage will continue to apply until final acceptance by the City of the building or addition, regardless of any prior occupancy.

(4) Flood Insurance must be provided when buildings or structures are located within an identified special flood hazard area. The Flood Insurance must protect the interest of the City and be in the amount of the total insurable value of such building or structure, or the maximum amount of flood insurance coverage available under the National Flood program, whichever is the lesser.

(5) For additions or repairs of existing buildings or structures, the "Builder's Risk Completed Form" covering the Contractor's interest in improvements, repairs, additions, or alterations to completed buildings, shall be included.

(6) Bridges, Viaducts or similar structures - the "Bridge Builders Risk Form" - "All risk" contract with the flat-premium endorsement should be utilized.

B. **INSTALLATION FLOATER** - when the contract is for the installation of machinery and/or equipment into an existing structure, but does not contemplate construction of or addition to the structure itself.

(1) "All Risk" coverage to include transit and installation.

(2) Amount of Insurance - 100% of installed replacement cost value

(3) Maximum Deductible - $5,000 each claim.

(4) Cessation of Insurance - Coverage is to continue in force until final acceptance by the City.

(5) Certified Copy of the policy must be provided to the City prior to commencement of work.

(6) Flood Insurance - must be provided when machinery or equipment are located within an identified special flood hazard area. The Flood Insurance must protect the interest of the city and be in the amount of the total insurable value of such machinery or equipment.

IV. CERTIFICATE OF INSURANCE CLAUSES

All policies and Certificates of Insurance of the Contractor shall contain the following clauses and agreements:

A. Insurers shall have no right of recovery or subrogation against the City of HOLLY HILL (as defined in "C" above), it being the intention of the parties that the insurance policies so effected shall protect both parties and be primary coverage for any and all losses covered by the above described insurance.

Attachment: Holly Hill LS_13 Rehabilitation_Bid Set Specifications_04.30.19 (2019-R-38 : Lift Station #13 Rehabilitation)

B. The clause "other insurance" in a policy in which the City of HOLLY HILL is named as an Insured shall not apply to the City of HOLLY HILL.

C. The insurance companies issuing the policies shall have no recourse against the City of HOLLY HILL (as defined in "C" above) for payment of any premiums or for assessments under any policy for insurance.

D. The contractor's insurer shall be requested to include a breach of warranty clause to prevent nullification of insurance because the Contractor breaches a condition of the policy.

E. Any and all deductibles in the above described insurance policies shall be assumed by and be for the account of, and at the sole risk of the Contractor.

F. Any loss payable under the Property Insurance, if any, is to be adjusted with and made payable to the City of HOLLY HILL, as their interest may appear.

V. CITY INDEMNIFICATION

The following Indemnification Agreement shall be a provision of this contract and also shall be endorsed onto or attached to the insurance policy and Certificate of Insurance:

"The Contractor agrees to protect, defend and pay on behalf of, and hold the City of HOLLY HILL and its elected officials, officers, employees, volunteers, representatives, agents and affiliates free and harmless from and against all claims for personal or bodily injury or death, or property damage or destruction of tangible property including loss of use thereof, losses, penalties, damages, settlements, costs, charges, professional fees or other expenses of every kind and character in connection with and arising directly or indirectly out of this agreement and/or performance thereof, unless such claims are a result of the City of HOLLY HILL's sole negligence. This indemnification clause includes claims made by the employees and subcontractors of the Contractor against the Owner and the Contractor hereby waives its entitlement, if any, to immunity under Section 440.11, Florida Statutes. Nothing contained herein shall be construed as a waiver of any immunity from or a limitation of liability the City may have under the doctrine of sovereign immunity or Chapter 768.28, Fla. Stat. This indemnification provision shall survive the completion of the project and shall be in full force and effect beyond the completion of the project or the termination of this contract.

VI. ENGINEER INDEMNIFICATION

"The Contractor agrees to protect, defend and pay on behalf of, and hold the ENGINEER and its officers, employees, and affiliates free and harmless from and against all claims for personal or bodily injury or death, or property damage or destruction of tangible property including loss of use thereof, losses, penalties, damages, settlements, costs, charges, professional fees or other expenses of every kind and character in connection with and arising directly or indirectly out of this agreement and/or performance thereof, unless such claims are a result of the ENGINEER'S sole negligence. This indemnification clause includes claims made by the employees and subcontractors of the Contractor against the ENGINEER. This indemnification provision shall survive the completion of the project and shall be in full force and effect beyond the completion of the project or the termination of this contract.

The Contractor shall be responsible for such requirements through the date of final acceptance of the project by the City. With regard to the Contractor's indemnification obligation for products

Attachment: Holly Hill LS_13 Rehabilitation_Bid Set Specifications_04.30.19 (2019-R-38 : Lift Station #13 Rehabilitation)

and completed operations, the Contractor shall be responsible for a minimum period of at least one year subsequent to the City's acceptance of the product or completed operation."

VII. The following Insurance Requirement Checklist shall be adhered to in its entirety. The coverage limits and language as indicated on the following checklist shall be reflected on the Contractor's Certificate of Insurance.

VIII. A Waiver of Subrogation shall be provided to the City.

IX. The Contractor' insurance carrier shall submit a letter showing authorization that the company is registered by the State of Florida Department of Insurance

Revised September 2005

Attachment: Holly Hill LS_13 Rehabilitation_Bid Set Specifications_04.30.19 (2019-R-38 : Lift Station #13 Rehabilitation)

CITY OF HOLLY HILL, FLORIDA
INSURANCE REQUIREMENTS CHECKLIST
CITY OF HOLLY HILL, VOLUSIA COUNTY, FLORIDA

Items marked "X" must be provided

			Minimum Limits Required	
X	General Liability			
	X	Commercial General Liability	$ 2,000,000	General Aggregate
	X	Occurrence Form	$ 1,000,000	Product/Completed Operations Agg.
		_____	$ 1,000,000	Personal & Advertising Injury
		_____	$ 1,000,000	Each Occurrence
		_____	$ 100,000	Fire Damage Pump Stations

X	Automobile Liability		
	Owned, Hired & Non-Owned	$ 1,000,000	Combined Single Limit per Occurrence
X	Worker's Compensation and	Statutory	
	Employer's Liability	$ 100,000	Each Accident
		$ 500,000	Disease - Policy Limit
		$ 100,000	Disease - Each Employee

___ **Professional Liability - Errors & Omissions** (*To be completed by Bidder)

* Deductible: $_____	$_____	Aggregate
* Claims Made (Y/N):_____	$_____	Each Claim
*Occurrence (Y/N):		
*Defense included in Limits (Y/N):		

X **Builder's Risk/Installation Floater** (*To be completed by Bidder)

* Flood included $_____ Limit	$_____	100% of Completed or Installed Value, All-Risk Form
* Transportation included $_____ Limit		
* Storage included $_____ Limit		

City must be a named insured. Copy of policy will be required.

___ **Other**

_____ $

_____ $

X The Certificate of Insurance must show "The City of HOLLY HILL, elected officials and employees" and the adjacent property owners as an additional insured.

X Certificates must give to the City of HOLLY HILL 30 days' prior written notice of cancellation, non-renewal, or adverse change.

X Certificates must identify bid number and bid title.

X A Wavier of Subrogation shall be provided to the City

Statement of Bidder:

We understand the requirements requested and agree to comply fully.

Bidder - Authorized Signature

A complete copy of this form with original signature must accompany bid.

Attachment: Holly Hill LS_13 Rehabilitation_Bid Set Specifications_04.30.19 (2019-R-38 : Lift Station #13 Rehabilitation)

SECTION 00 84 00
CONTRACTOR REQUEST FOR INFORMATION (RFI)

PROJECT NAME: **LIFT STATION #13 REHABILITATION**
OWNER: _____
ENGINEER:_____ PROJECT NO. _____
CONTRACTOR:_____ PROJECT NO. _____

RFI NO._____ SPEC. SECT._____ DRAWING NO._____
RFI SHORT TITLE:_____

QUESTION/ISSUE:_____
_____
_____
_____
_____
BY:_____ DATE: _____

REPLY:_____
_____
_____
_____
_____
_____
_____
_____
_____
BY:_____ DATE:_____

CC:

- ☐ CONTRACTOR
- ☐ FIELD (INSPECTOR)
- ☐ OWNER
- ☐ ARCHITECT
- ☐ OTHER: _____

END SECTION

Attachment: Holly Hill LS_13 Rehabilitation_Bid Set Specifications_04.30.19 (2019-R-38 : Lift Station #13 Rehabilitation)

SECTION 00 84 10
NOTICE OF AWARD FORM

Date:_____

Contractor:_____

Project: **CITY OF HOLLY HILL**
LIFT STATION #13 REHABILITATION

Date of Bid Opening: _____

You are notified that your bid dated _____, 20____ for the above Contract has been considered and the OWNER, expects to award you a contract for:

_____

_____.

(Indicated total Work, Alternates or Sections of Work Awarded)

The Contract Price of your contract is _____ Dollars ($_____).

Five (5) copies of each of the following proposed Contract Documents (except Project Manual and Drawings) accompany this Notice of Award:

- Agreement Between Owner and Contractor
- Payment and Performance Bond
- Public Construction Bond
- Insurance Requirements
- Affidavit Regarding Workman's Compensation
- Certificate of Insurance for Workman's Compensation

Attachment: Holly Hill LS_13 Rehabilitation_Bid Set Specifications_04.30.19 (2019-R-38 : Lift Station #13 Rehabilitation)

You must comply with the following conditions to the awarded contract within ten (10) days of the date of the Notice of Award, which is by _____, 20___.

1. You must deliver to the OWNER five (5) fully executed counterparts of the Agreement.

2. You must deliver with the executed Agreement five (5) completed original documents with original signatures on the Payment and Material Payment Bond and Public Construction Bond in the form specified in the Bidding Documents.

3. You must provide in writing the correct name and address of the surety which is providing the Payment and Material Payment Bond and Public Construction Bonds and the correct name and address of the surety's resident agent for service of process in Florida.

4. You must deliver with the executed Agreement five (5) completed, with original signatures, Certificates and Endorsements of Insurance in the form specified in the Bidding Documents.

Failure to comply with these conditions within the time specified will entitle the OWNER to consider your Bid abandoned, to annul this Notice of Award, and to declare your Bid Security forfeited.

Within ten (10) days after you comply with these conditions, the OWNER will return to you two (2) fully signed counterparts of the agreement with the Contract Documents attached.

OWNER'S REPRESENTATIVE:

_____

_____ Date: _____
(Authorized Signature)

_____
(Title)

END OF SECTION

Attachment: Holly Hill LS_13 Rehabilitation_Bid Set Specifications_04.30.19 (2019-R-38 : Lift Station #13 Rehabilitation)

SECTION 00 84 20
NOTICE TO PROCEED FORM

Date: _____

Contractor: _____

_____

Notice to Proceed on Project:

You are notified that the Contract Time under the above contract will commence to run on _____ _____, 20___. On that date you are to start performing the Work and your other obligations under the Contract Documents. Based on the Contract Time stated in the Agreement, we calculate that the dates of substantial Completion and Final Completion are _____ _____, 20___, and _____, 20___, respectively.

Work at the site must be started by _____, 20__ as indicated in the Contract Documents.

Enclosed is one (1) set of Drawings and one (1) bound copy of the Project Manual containing:

- Instruction to Bidders
- Bid Form
- Bid Bond
- Executed Agreement
- Payment and Performance Bond
- Public Construction Bond
- Certificates of Insurance
- General Conditions
- Supplementary Conditions
- Notice of Award
- Specifications
- Addenda Numbers ____ through ____

OWNER'S REPRESENTATIVE:

_____

_____
(Name/Title)

_____
(Date)

END OF SECTION

Attachment: Holly Hill LS_13 Rehabilitation_Bid Set Specifications_04.30.19 (2019-R-38 : Lift Station #13 Rehabilitation)

SECTION 00 84 30

CHANGE ORDER FORM

PROJECT:

CHANGE ORDER NO. _____

CONTRACTOR:_____

The following changes are hereby made to the Contract Documents:

CHANGE IN CONTRACT PRICE: Original Contract Price: $_____	CHANGE IN CONTRACT TIMES: Original Contract Times: Substantial Completion: _____ Final Completion:
Net changes from previous Change Orders No. _____ to No. _____. $_____	Changes in contract time from previous Change Orders No. _____ to No. _____. _____ Days
Contract Price prior to this Change Order: $_____	Contract Completion Date prior to this Change Order: Final Completion:
Net Increase (decrease) of this Change Order: $_____	Changes in contract time requested this Change Order No. __ _____ Days
Contract Price with all approved Change Orders: $_____	Contract Times with all approved Change Orders: Final Completion:

Attachment: Holly Hill LS_13 Rehabilitation_Bid Set Specifications_04.30.19 (2019-R-38 : Lift Station #13 Rehabilitation)

CHANGES ORDERED:

I. GENERAL – This change order is necessary to cover changes in the work to be performed under this Contract. The General Conditions, Supplementary Conditions, Specifications and all parts of the Project Manual listed in Article 1, Definitions, of the General Conditions apply to and govern all work under this change order.

The change in price and/or delivery date described, is considered to be fair and reasonable and has been mutually agreed upon in full agreement and final settlement of all claims arising out of the modification including all claims for delays and disruptions resulting from, caused by, or incident to such modifications and change orders.

II. REQUIRED CHANGES:

III. JUSTIFICATION:

IV. PAYMENT:

Attachment: Holly Hill LS_13 Rehabilitation_Bid Set Specifications_04.30.19 (2019-R-38 : Lift Station #13 Rehabilitation)

Acknowledgments:

The aforementioned change, and work affected thereby, is subject to all provisions of the original contract not specifically changed by this Change Order;

It is expressly understood and agreed that the approval of the Change Order shall have no effect on the original contract other than matters expressly provided herein;

The prices quoted are fair and reasonable and in proper ratio to the cost of the original work contracted for under competitive bidding; and,

The change in price and/or delivery date described is considered to be fair and reasonable and has been mutually agreed upon in full agreement and final settlement of all claims arising out of this modification including all claims for delays and disruptions resulting from, caused by, or incident to such modifications and change orders.

RECOMMENDED BY:

Mead & Hunt, Inc.
(Engineer)

By:
Name Typed (Date)

(Authorized Signature)

ACCEPTED BY:

(Contractor)

Name Typed (Date)

(Authorized Signature)

APPROVED BY:

Owner

By:
Name Typed (Date)

(Authorized Signature)

END OF SECTION

Attachment: Holly Hill LS_13 Rehabilitation_Bid Set Specifications_04.30.19 (2019-R-38 : Lift Station #13 Rehabilitation)

SECTION 00 84 40

APPLICATION AND CERTIFICATE FOR PAYMENT FORM

Application No. _____ Progress _____ Final _____

Engineer's Project No.: _____

Project:

Contractor: _ _____ Contract Date: _____

Contract for : _____

Application Date: _____ For Period Ending _____

Change Order Summary			
Change Orders approved in previous months by OWNER		ADDITIONS	DEDUCTIONS
TOTAL		$ 0.00	$ 0.00
Approved this month			
Number	Date Approved		
	TOTALS	$ 0.00	$ 0.00
Net Change by Change Orders			$ 0.00

1.	ORIGINAL CONTRACT SUM	$ 0.00
2.	Net Change by Change Order	$ 0.00
3.	CONTRACT SUM TO DATE (Line 1 and 2)	$ 0.00
4.	TOTAL COMPLETED AND STORED TO DATE	$
5.	RETAINAGE: (Column I & N, Forms 00845 and 00846)	
	a. ____% of Completed Work	$
	b. ____% of Stored Material	$
	Total Retainage (Line 5a and 5b)	$ 0.00
6.	TOTAL EARNED LESS RETAINAGE	
	(Line 4 less Line 5 Total)	$ 0.00
7.	LESS PREVIOUS CERTIFICATES FOR PAYMENT	
	(Line 6 from prior Certificate)	$ 0.00
8.	***AMOUNT DUE THIS APPLICATION***	***$ 0.00***
9.	BALANCE TO FINISH, PLUS RETAINAGE	$ 0.00
	(Line 3 less Line 6)	

Attachment: Holly Hill LS_13 Rehabilitation_Bid Set Specifications_04.30.19 (2019-R-38 : Lift Station #13 Rehabilitation)

Contractor's Certification

The undersigned Contractor hereby swears under penalty of perjury that (1) all previous progress payments received from the Owner on account of Work performed under the contract referred to above have been applied by the undersigned to discharge in full all obligations of the undersigned incurred in connection with Work covered by prior Applications for Payment numbered 1 through ____ inclusive; and (2) all materials and equipment incorporated in said Project or otherwise listed in or covered by this Application for Payment are free and clear of all liens, claims, security interest and encumbrances; (3) all Work covered by this Application for Payment is in accordance with the Contract Documents and not defective as that term is defined in the Contract Documents.

Dated _____

_____
(Contractor)

By: _____
(Name)

_____
(Title)

COUNTY OF
STATE OF

Before me on this _____ day of _____, 20____, personally appeared _____, known to me, who being duly sworn, deposes and says that (s)he is the _____ of the Contractor above mentioned; that s(he) executed the above Application for Payment and statement on behalf of said Contractor; and that all of the statements contained therein are true, correct and complete.

(Notary Seal)

_____
Notary Public

My commission Expires _____

Engineer's Recommendation

Payment of the above AMOUNT DUE THIS APPLICATION is recommended.

Mead & Hunt, Inc.

By: _____
(Authorized Signature)

Date: _____

Attachment: Holly Hill LS_13 Rehabilitation_Bid Set Specifications_04.30.19 (2019-R-38 : Lift Station #13 Rehabilitation)

Owner's Approval

By: _____

_____
(Title)

Acct No. _____

Date: _____

END OF SECTION

Attachment: Holly Hill LS_13 Rehabilitation_Bid Set Specifications_04.30.19 (2019-R-38 : Lift Station #13 Rehabilitation)

SECTION 00 84 40
BID ITEM PAY REQUEST FORM

Application No.
Project:

Owner:

Application Date:
Period Ending:
Contractor:

CONTRACT						Previous Payment		Work this Period		Total to Date		
Item #	Item Description	Qty.	Unit	Unit Price	Total Price	Qty	Amount	Qty	Amount	Qty	Amount	% Complete
	Total Contract Amount											

	Previous Payment Amount	Work this Period Amount	Total to Date Amount	% Complete
Subtotal:				
Stored Materials Installed/Received:				
Subtotal:				
Less Retainage (%)				
Grand Total:				

Attachment: Holly Hill LS_13 Rehabilitation_Bid Set Specifications_04.30.19 (2019-R-38 : Lift Station #13 Rehabilitation)

SECTION 00 84 80
CERTIFICATE OF SUBSTANTIAL COMPLETION

OWNER'S Project No.: _____ ENGINEER's Project No.: _____

CONTRACTOR: _____

Contract Date: _____

This Certificate of Substantial Completion applies to all Work under the Contract Documents or to the following specified parts thereof.

To: _____
Owner

And To: _____
Contractor

The Work to which this Certificate applies has been inspected by authorized representatives of OWNER, CONTRACTOR and ENGINEER, and that Work is hereby declared to be substantially complete in accordance with the Contract Documents on:

_____
Date of Substantial Completion

Attachment: Holly Hill LS_13 Rehabilitation_Bid Set Specifications_04.30.19 (2019-R-38 : Lift Station #13 Rehabilitation)

A tentative list of items to be completed or corrected is attached hereto. This list may not be all-inclusive, and the failure to include an item therein does not alter the responsibility of CONTRACTOR to complete all the Work in accordance with the Contract documents. When this Certification applies to a specified part of the Work the items in the tentative list shall be completed or corrected by CONTRACTOR within _____ days of the above date of Substantial Completion.

The date of Substantial Completion is the date upon which all guarantees and warranties begin, except as follows:

The responsibilities between OWNER and CONTRACTOR for security, operation, safety, maintenance, heat, utilities and insurance shall be as follows:

RESPONSIBILITIES:

OWNER _____

_____

_____

CONTRACTOR _____

_____

_____

The following documents are attached to and made a part of this Certificate:

Attachment: Holly Hill LS_13 Rehabilitation_Bid Set Specifications_04.30.19 (2019-R-38 : Lift Station #13 Rehabilitation)

This certificate does not constitute an acceptance of Work not in accordance with the Contract Documents nor is it a release of CONTRACTOR'S obligation to complete the Work in accordance with the Contract Documents.

Executed by ENGINEER on _____, 20___.

_____
(Engineer)

By_____

The CONTRACTOR accepts this Certificate of Substantial Completion on _____, 20__.

_____
(Contractor)

By_____

Attachment: Holly Hill LS_13 Rehabilitation_Bid Set Specifications_04.30.19 (2019-R-38 : Lift Station #13 Rehabilitation)

SECTION 00 84 90
CONTRACTOR'S FINAL RELEASE OF LIEN

Before me the undersigned authority in said County and State, appeared _____ who, being first duly sworn, deposes and says that he is _____ of _____, a company and/or corporation authorized to do business under the laws of Florida, which is the Contractor on the Contract described as: "**LIFT STATION #13 REHABILITATION",** dated the ___ day of _____, 20___, that the said deponent is duly authorized to make this affidavit by resolution of the Board of Directors of said company and/or corporation; that deponent knows of his own knowledge that said Contract has been complied with in every particular by said Contractor and that all parts of the work have been approved by the Owner's Engineers; that there are no bills remaining unpaid for labor, material, or otherwise, in connection with said Contract and work, and that there are no suits pending against the undersigned as Contractor or anyone in connection with the work done and materials furnished or otherwise under said Contract. Deponent further says that the final estimate which has been submitted to the owner simultaneously with the making of the affidavit constitutes all claims and demands against the Owner on account of said Contract or otherwise, and the acceptance of the sum specified in said final estimate will operate as full and final release and discharge of the Owner from any further claims, demands or compensation by Contractor under the above Contract. Deponent further agrees that all guarantees under this Contract shall be in full force from the date of this release as spelled out in the Contract Documents.

Sworn to and subscribed to before me this _____day of _____, 20____.

_____
Notary Public

My Commission Expires: _____

We, the _____having heretofore executed a Performance Bond for the above-mentioned Contractor covered Project and Section as described above in the sum of _____ dollars ($_____), hereby agree that the Owner may make full payment of the final estimate, including the retained percentage, to said Contractor.

It is fully understood that the granting of the right to the Owner to make payment of the final estimate to said Contractor and/or his assigns, shall in no way release the surety company of its obligations under its bond, as set forth in the Specifications, Contract and Bond pertaining to the above Project.

Attachment: Holly Hill LS_13 Rehabilitation_Bid Set Specifications_04.30.19 (2019-R-38 : Lift Station #13 Rehabilitation)

IN WITNESS WHEREOF, the _____has caused this instrument to be executed on its behalf by its _____and/or its duly authorized attorney in fact, and its corporate seal to be hereunto affixed, all of this _____ day of _____, A.D., 20_____.

_____
Surety Company

_____
Attorney in Fact

(Power of Attorney must be attached if executed by Attorney in Fact)

STATE OF FLORIDA

COUNTY OF _____

Before me the undersigned authority, personally appeared to me well known as the person described in and who executed the foregoing instrument in the name of _____ _____and/or authority to execute the same on behalf of said _____ _____, a corporation.

IN WITNESS WHEREOF, I have hereunto set my hand and official seal at _____this _____day of _____, 20_____.

_____
Notary Public

My Commission Expires:_____

END OF SECTION

Attachment: Holly Hill LS_13 Rehabilitation_Bid Set Specifications_04.30.19 (2019-R-38 : Lift Station #13 Rehabilitation)

SECTION 01 00 00

PROJECT REQUIREMENTS

PART 1 – GENERAL

1.01 DESCRIPTION

A. Scope of Work: The Work to be done consists of the furnishing of all labor, materials and equipment, and the performance of all Work included in this Contract. The summary of the Work is presented in Section 01 11 00: Summary of Work.

B. Work Included:

1. The CONTRACTOR shall furnish all labor, superintendence, materials, plant power, light, heat, fuel, water, tools, appliances, equipment, supplies, and means of construction necessary for proper performance and completion of the Work. The CONTRACTOR shall obtain and pay for all necessary local building permits. The CONTRACTOR shall perform and complete the work in the manner best calculated to promote rapid construction consistent with safety of life and property and to the satisfaction of the ENGINEER, and in strict accordance with the Contract Documents. The CONTRACTOR shall clean up the Work and maintain it during and after construction, until accepted, and shall do all Work and pay all costs incidental thereto. He shall repair or restore all structures and property that may be damaged or disturbed during performance of the Work.

2. The cost of incidental work described in these Project Requirements, for which there are no specific Contract Items, shall be considered as part of the general cost of doing the Work and shall be included in the prices for the various Contract Items. No additional payment will be made therefore.

3. The CONTRACTOR shall provide and maintain such modern plant, tools, and equipment as may be necessary, in the opinion of the ENGINEER, to perform in a satisfactory and acceptable manner all the Work required by this Contract. Only equipment of established reputation and proven efficiency shall be used. The CONTRACTOR shall be solely responsible for the adequacy of his workmanship, materials, and equipment, prior approval of the ENGINEER notwithstanding.

Attachment: Holly Hill LS_13 Rehabilitation_Bid Set Specifications_04.30.19 (2019-R-38 : Lift Station #13 Rehabilitation)

C. Public Utility Installations and Structures:

1. Public utility installations and structures shall be understood to include all poles, tracks, pipes, wires, conduits, vaults, manholes, and all other appurtenances and facilities pertaining thereto whether owned or controlled by the OWNER, other governmental bodies, or privately owned by individuals, firms, or corporations, used to serve the public with transportation, traffic control, gas, electricity, telephone, sewerage, drainage, water, or other public or private property which may be affected by the Work shall be deemed included hereunder.

2. The Contract Documents contain data relative to existing public utility installations and structures above and below the ground surface. These data are not guaranteed as to their completeness or accuracy and it is the responsibility of the CONTRACTOR to make his own investigations to inform himself fully of the character, condition, and extent of all such installations and structures as may be encountered and as may affect the construction operations.

3. The CONTRACTOR shall protect all public utility installations and structures from damage during the Work. Access across any buried public utility installation or structure shall be made to avoid any damage to these facilities. All required protective devices and construction shall be provided by the CONTRACTOR at his expense. All existing public utilities damaged by the CONTRACTOR shall be repaired by the CONTRACTOR, at his expense. No separate payment shall be made for such protection or repairs to public utility installations or structures.

4. Public utility installations or structures owned or controlled by the OWNER or other governmental body which are shown on the Drawings to be removed, relocated, replaced, or rebuilt by the CONTRACTOR shall be considered as a part of the general cost of doing the Work and shall be included in the prices bid for the various Contract Items; therefore, no separate payment shall be made.

5. Where public utility installations of structures owned or controlled by the OWNER or other governmental body are encountered during the course of the Work, and are not indicated on the Drawings or in the Specifications, and when, in the opinion of the ENGINEER, removal, relocation, replacement, or rebuilding is necessary to complete the Work under this Contract, such Work shall be accomplished by the utility having jurisdiction, or such Work may be ordered, in writing by the ENGINEER, for the CONTRACTOR to accomplish. If such work is accomplished by the utility having jurisdiction it will be carried out expeditiously, and the CONTRACTOR shall give full cooperation to permit the utility to complete the removal, relocation,

Attachment: Holly Hill LS_13 Rehabilitation_Bid Set Specifications_04.30.19 (2019-R-38 : Lift Station #13 Rehabilitation)

replacement, or rebuilding as required. If such work is accomplished by the CONTRACTOR, it will be paid for as extra work as provided in the Agreement.

6. The CONTRACTOR shall, at all times, in performance of the Work, employ acceptable methods and exercise reasonable care and skill so as to avoid unnecessary delay, injury, damage, or destruction of public utility installations and structures; and shall, at all times in the performance of the Work, avoid unnecessary interference with, or interruption of, public utility services, and shall cooperate fully with the owners thereof to that end.

7. The CONTRACTOR shall give written notice to OWNER and other governmental utility departments and other owners of public utilities of the location of his proposed construction operations, at least 48-hours in advance of breaking ground in any area or on any unit of the Work.

8. The maintenance, repair, removal, relocation, or rebuilding of public utility installations and structures, when accomplished by the CONTRACTOR as herein provided, shall be done by methods approved by the owners of such utilities.

1.02 DRAWINGS AND PROJECT MANUAL

A. Drawings: When obtaining data and information from the Drawings, figures shall be used in preference to scaled dimensions, and large-scale drawings in preference to small-scale drawings.

B. Supplementary Drawings:

1. When, in the opinion of the ENGINEER, it becomes necessary to explain more fully the Work to be done or to illustrate the Work further or to show any changes which may be required, drawings known as Supplementary Drawings, with specifications pertaining thereto, will be prepared by the ENGINEER, and the CONTRACTOR will be furnished one (1) complete set of reproducible Mylar sepias [24 inches by 36 inches (24" x 36")] and one (1) reproducible copy of the Project Manual.

2. The Supplementary Drawings shall be binding upon the CONTRACTOR with the same force as the Contract Drawings. Where such Supplementary Drawings require either less or more than the estimated quantities of Work, credit to the OWNER or compensation therefore to the CONTRACTOR shall be subject to the terms of the Agreement.

Attachment: Holly Hill LS_13 Rehabilitation_Bid Set Specifications_04.30.19 (2019-R-38 : Lift Station #13 Rehabilitation)

C. CONTRACTOR to Check Drawings and Data:

1. The CONTRACTOR shall verify all dimensions, quantities, and details shown on the Drawings, Supplementary Drawings, schedules, Specifications, or other data received from the ENGINEER, and shall notify him of all errors, omissions, conflicts, and discrepancies found therein. Failure to discover or correct errors, conflicts, or discrepancies shall not relieve the CONTRACTOR of full responsibility for unsatisfactory work, faulty construction, or improper operation resulting there from, nor from rectifying such conditions at his own expense. He will not be allowed to take advantage of any errors or omissions, as full instructions will be furnished by the ENGINEER, should such errors or omissions be discovered.

2. All schedules are given for the convenience of the ENGINEER and the CONTRACTOR and are not guaranteed to be complete. The CONTRACTOR shall assume all responsibility or the making of estimates of the size, kind, and quality of materials and equipment included in work to be done under the Contract.

D. Specifications: The Technical Specifications consist of three (3) parts: General, Products, and Execution. The General part of a Specification contains General Requirements which govern the Work. The Products and Execution parts modify and supplement the General Requirements by detailed requirements for the Work and shall always govern whenever there appears to be a conflict.

E. Intent:

1. All Work called for in the Specifications applicable to this Contract, but not shown on the Drawings in their present form, or vice versa, shall be of like effect as if shown or mentioned in both. Work not specified in either the Drawings or in the Specifications, but involved in carrying out their intent or in the complete and proper execution of the Work, is required and shall be performed by the CONTRACTOR as though it were specifically delineated or described.

2. The apparent silence of the Specifications as to any detail, or the apparent omission from them of a detailed description concerning any work to be done and materials to be furnished, shall be regarded as meaning that only the best general practice is to prevail and that only material and workmanship of the best quality is to be used, the interpretation of these Specifications shall be made upon that basis.

Attachment: Holly Hill LS_13 Rehabilitation_Bid Set Specifications_04.30.19 (2019-R-38 : Lift Station #13 Rehabilitation)

1.03 MATERIALS AND EQUIPMENT

A. Manufacturer:

1. All transactions with the manufacturers or subcontractors shall be through the CONTRACTOR, unless the CONTRACTOR shall request and at the ENGINEER's option, that the manufacturer or subcontractor deal directly with the ENGINEER. Any such transactions shall not in any way release the CONTRACTOR from his full responsibility under this Contract.

2. Any two (2) or more pieces of material or equipment of the same kind, type, or classification, and being used for identical types of service, shall be made by the same manufacturer.

B. Delivery:

1. The CONTRACTOR shall deliver materials in ample quantities to ensure the most speedy and uninterrupted progress of the Work so as to complete the Work within the allotted time.

2. The CONTRACTOR shall also coordinate deliveries in order to avoid delay in, or impediment of, the progress of the work of any related CONTRACTOR.

C. Tools and Accessories:

1. The CONTRACTOR shall, unless otherwise stated in the Contract Documents, furnish with each type, kind, or size of equipment, one (1) complete set of suitably marked high grade special tools and appliances which may be needed to adjust, operate, maintain, or repair the equipment. Such tools and appliances shall be furnished in approved painted steel cases, properly labeled, and equipped with good grade cylinder locks and duplicate keys.

2. Spare parts shall be furnished as specified herein and as recommended by the manufacturer necessary for the operation of the equipment, not including materials required for routine maintenance.

3. Each piece of equipment shall be provided with a substantial nameplate, securely fastened in place, and clearly inscribed with the manufacturer's name, year of manufacture, serial number, weight, and principal rate data.

Attachment: Holly Hill LS_13 Rehabilitation_Bid Set Specifications_04.30.19 (2019-R-38 : Lift Station #13 Rehabilitation)

D. Service of Manufacturer's Engineer:

1. The Contract Prices for equipment shall include the cost of furnishing a competent and experienced engineer or superintendent who shall represent the manufacturer and shall assist the CONTRACTOR, when required, to install, adjust, test, and place in operation, the equipment in conformity with the Contract Documents.

2. After the equipment is placed in permanent operation by the OWNER, such engineer or superintendent shall make all adjustments and tests required by the ENGINEER to prove that such equipment is in proper and satisfactory operating condition, and shall instruct such personnel as may be designated by the OWNER in the proper operation and maintenance of such equipment.

1.04 INSPECTION AND TESTING

A. General:

1. For tests specified to be made by the CONTRACTOR, the testing personnel shall make the necessary inspections and tests, and the reports thereof shall be in such form as will facilitate checking to determine compliance with the Contract Documents. Five (5) copies of the reports shall be submitted, and authoritative certification thereof must be furnished to the ENGINEER as a prerequisite for the acceptance of any material or equipment.

2. If, in the making of any test of any material or equipment, it is ascertained by the ENGINEER that the material or equipment does not comply with the Contract Documents, the CONTRACTOR will be notified thereof, and he will be directed to refrain from delivering said material or equipment, or to remove it promptly from the site or from the Work and replace it with acceptable material, without cost to the OWNER.

3. Tests of electrical and mechanical equipment and appliances shall be conducted in accordance with the recognized test codes of the ANSI, ASME, or the IEEE, except as may otherwise be stated herein.

4. The CONTRACTOR shall be fully responsible for the proper operation of equipment during testing and instruction periods and shall neither have nor make any claim for damage which may occur to equipment prior to the time when the OWNER formally takes over the operation thereof.

B. Costs:

1. All inspection and testing of materials furnished under this Contract will be provided by the CONTRACTOR, unless otherwise expressly specified.

Attachment: Holly Hill LS_13 Rehabilitation_Bid Set Specifications_04.30.19 (2019-R-38 : Lift Station #13 Rehabilitation)

2. The cost of shop and field tests of equipment and of certain other tests specifically called for in the Contract Documents shall be borne by the CONTRACTOR, and such costs shall be deemed to be included in the Contract Price.

3. Materials and equipment submitted by the CONTRACTOR as the equivalent to those specifically named in the Contract may be tested by the OWNER for compliance. The CONTRACTOR shall reimburse the OWNER for the expenditures incurred in making such tests of materials and equipment which are rejected for non-compliance.

C. Certificate of Manufacture:

1. CONTRACTOR shall furnish to ENGINEER authoritative evidence in the form of a certificate of manufacture that the materials to be used in the Work have been manufactured and tested in conformity with the Contract Documents.

2. These certificates shall be notarized and shall include copies of the results of physical tests and chemical analyses, where necessary, that have been made directly on the product or on similar products of the manufacturer.

D. Shop Tests:

1. Each piece of equipment for which pressure, duty, capacity, rating, efficiency, performance, function, or special requirements are specified shall be tested in the shop of the maker in a manner which shall conclusively prove that its characteristics comply fully with the requirements of the Contract Documents.

2. Five (5) copies of the manufacturer's actual test data and interpreted results thereof, accompanied by a certificate of authenticity sworn to by a responsible official of the manufacturing company and/or independent laboratory, shall be submitted to the ENGINEER for approval.

3. The cost of shop tests and of furnishing manufacturer's preliminary and shop test data of operating equipment shall be borne by the CONTRACTOR.

E. Start-up Tests:

1. As soon as conditions permit, the CONTRACTOR shall furnish all labor, materials, and instruments and shall make start-up tests of equipment.

Attachment: Holly Hill LS_13 Rehabilitation_Bid Set Specifications_04.30.19 (2019-R-38 : Lift Station #13 Rehabilitation)

2. If the start-up tests disclose any equipment furnished under this Contract which does not comply with the requirements of the Contract Documents, the CONTRACTOR shall, prior to demonstration tests, make all changes, adjustments, and replacements required. The furnishing CONTRACTOR shall assist in the start-up tests as applicable.

F. Demonstration Tests:

1. Prior to CONTRACTOR's request for a Substantial Completion inspection, all equipment and piping installed under this Contract shall be subjected to demonstration tests as specified or required to prove compliance with the Contract Documents.

2. The CONTRACTOR shall furnish labor, fuel, energy, water, and all other materials, equipment, and instruments necessary for all demonstration tests, at no additional cost to the OWNER. CONTRACTOR shall assist in the demonstration tests as applicable.

1.05 LINES AND GRADES

A. Grade:

1. All work under this Contract shall be constructed in accordance with the lines and grades shown on the Drawings, or as given by the ENGINEER. The full responsibility for keeping alignment and grade shall rest upon the CONTRACTOR.

2. The vertical bench marks provided is USGS "Public Records" monumentation and the horizontal control is the monumentation on plats contained in the "Public Records of Volusia County."

B. Surveys:

1. The CONTRACTOR shall furnish and maintain, at his own expense, stakes, and other such materials.

2. The CONTRACTOR shall check such reference marks by such means as he may deem necessary and, before using them, shall call the ENGINEER's attention to any inaccuracies.

3. The CONTRACTOR shall, at his own expense, establish all working or construction lines and grades as required from the reference marks set by the ENGINEER, and shall be solely responsible for the accuracy thereof. He shall, however, be subject to the check and review by the ENGINEER.

Attachment: Holly Hill LS_13 Rehabilitation_Bid Set Specifications_04.30.19 (2019-R-38 : Lift Station #13 Rehabilitation)

C. Safeguarding Marks:

1. The CONTRACTOR shall safeguard all points, stakes, grade marks, monuments, and bench marks made or established on the Work, bear the cost of re-establishing them if disturbed, and bear the entire expense of rectifying work improperly installed due to not maintaining or protecting or to removing without authorization such established points, stakes, and marks.

2. The CONTRACTOR shall safeguard all existing and known property corners, monuments, and marks adjacent to but not related to the Work and shall bear the cost of re-establishing them if disturbed or destroyed.

PART 2 – PRODUCTS (NOT USED)

PART 3 – EXECUTION (NOT USED)

END OF SECTION

Attachment: Holly Hill LS_13 Rehabilitation_Bid Set Specifications_04.30.19 (2019-R-38 : Lift Station #13 Rehabilitation)

SECTION 01 02 70
APPLICATION FOR PAYMENT

PART I - GENERAL

1.01 DESCRIPTION

A. Scope of Work: Submit Application for payment to the Engineer in accordance with schedule established by Conditions of the Contract and Agreement between Owner and Contractor. Contractor shall use the Application and Certificate for Payment Form included on Section 00 84 40 as the official pay request form.

B. Related Requirements Described Elsewhere:

1. Agreement: Section 00 50 00.
2. Construction Progress Schedules: Section 01 31 00.
3. Schedule of Values: Section 01 37 00.
4. Photographic Documentation: Section 01 32 33
5. Project Record Documents: Section 01 78 39.

1.02 FORMAT REQUIRED

A. Submit applications typed on the form provided in Division 0, Section 00 84 40: Application and Certificate for Payment Form, with itemized data typed on 8-1/2 inch x 11 inch or white paper continuation sheets.

B. Provide itemized data on continuation sheets of format, schedules, line items, and values specified on the Application and Certificate for Payment Form. The Contractor shall use the item descriptions and contract values included in schedule of values, approved and accepted by the Engineer as a basis for preparation of the Application for Payment Form.

1.03 PREPARATION OF APPLICATION FOR EACH PROGRESS PAYMENT

A. Application Form:

1. Fill in required information, including that for Change Orders executed prior to date of submittal of application.

2. Fill in percent complete for each activity and dollar values to agree with respective percents.

3. Execute certification with signature of a responsible officer of Contractor.

Attachment: Holly Hill LS_13 Rehabilitation_Bid Set Specifications_04.30.19 (2019-R-38 : Lift Station #13 Rehabilitation)

B. Continuous Sheets:

1. Fill in total of all scheduled component items of the Work, with item number and schedule dollar value for each item.

2. Fill in dollar value in each column for each scheduled line item when Work has been performed or products stored. Round off values to nearest dollar, or as specified for Schedule of Values.

3. List each Change Order executed prior to date of submission, at the end of the continuation sheets. List by Change Order Number, and description, as for an original component item Work.

4. To receive approval for payment on component material stored on site, submit copies of the original invoices with Application and Certificate for Payment.

5. As provided for in the Application and Certificate for Payment Form, the Contractor shall certify, for each current pay request, that all previous progress payments received from the Owner, under this Contract, have been applied by the Contractor to discharge in full, all obligations of the Contractor in connection with Work covered by prior Applications for Payment, and all materials and equipment incorporated into the Work are free and clear of all liens, claims, security interest, and encumbrances. Contractor shall attach to each Application and Certificate for Payment like affidavits by all Subcontractors.

1.04 SUBSTANTIATING DATA FOR PROGRESS PAYMENTS

A. Contractor shall submit suitable information, with a cover letter identifying:

1. Project.

2. Application number and date.

3. Detailed list of enclosures.

4. For stored products:

5. Item number and identification as shown on application.

6. Description of specific material.

B. Submit one (1) copy of data and cover letter for each copy of application.

Attachment: Holly Hill LS_13 Rehabilitation_Bid Set Specifications_04.30.19 (2019-R-38 : Lift Station #13 Rehabilitation)

C. The Contractor is to maintain an updated set of drawings to be used as record drawings in accordance with Section 01 78 39: Project Record Documents. As a prerequisite for monthly progress payments, the Contractor is to exhibit the updated record drawings for review by the Owner and the Engineer.

D. Each monthly application for payment shall incorporate the corresponding "monthly progress status report" and updated construction schedule, prepared in accordance with the requirements of Section 01 31 00: Construction Progress Schedules.

E. As a prerequisite for payment, Contractor shall submit a duly executed letter from surety consenting to payment due and progress to date.

F. Provide construction photographs in accordance with Section 01 32 33: Photographic Documentation.

1.05 PREPARATION OF APPLICATION FOR FINAL PAYMENT

A. Fill in application form as specified for progress payments. Provide information as required by the General Conditions and Section 01 77 00: Closeout Procedures.

B. Furnish evidence of completed operations and insurance in accordance with the General Conditions.

C. Provide Contractor's Final Release of Lien (Section 00 84 90) and other close-out submittals as required by the General Conditions.

1.06 SUBMITTAL PROCEDURE

A. Submit Application for Payment to the Engineer at the time stipulated in the Agreement, or as agreed to at the pre-construction meeting. Review the percents complete with the Engineer and resolve any conflict or discrepancies.

B. Number of copies for each Application for Payment: Five (5) copies plus additional copies for Contractor's needs.

C. When the Engineer finds the Application and Certificate for Payment Form is properly completed and correct, he will execute the Certificate for Payment and transmit the forms to the Owner, with a copy to the Contractor.

PART II - PRODUCTS (NOT USED)

PART III - EXECUTION (NOT USED)

END OF SECTION

Attachment: Holly Hill LS_13 Rehabilitation_Bid Set Specifications_04.30.19 (2019-R-38 : Lift Station #13 Rehabilitation)

SECTION 01 11 00

SUMMARY OF WORK

PART 1 – GENERAL

1.01 WORK COVERED BY CONTRACT DOCUMENTS

A. This Contract is for the construction of the **LIFT STATION #13 REHABILITATION**. The work consists of furnishing all labor, equipment, and materials for the construction of the facilities consisting of, but not limited to, the following:

The rehabilitation of the City of Holly Hill Lift Station #13 includes the conversion of the can lift station into a submersible station. Work includes bypass pumping, demolition of (2) existing pumps, piping, and valves to abandon pump can. Installation of two (2) new submersible pumps, top slab, piping, valves, valve vault, electrical panel and control panel.

B. The CONTRACTOR shall furnish all labor, equipment, tools, services, and incidentals to complete all Work required by these Specifications and as shown on the Drawings.

C. The CONTRACTOR shall perform the Work complete, in place, and ready for continuous service, and shall include repairs, testing, permits, cleanup, replacements and restoration required as a result of damages caused during this construction.

D. All materials, equipment, skills, tools, and labor which is reasonably and properly inferable and necessary for the proper completion of the Work in a substantial manner and in compliance with the requirements stated or implied by these Specification or Drawings shall be furnished and installed by the CONTRACTOR without additional compensation, whether specifically indicated in the Contract Documents or not.

E. The CONTRACTOR shall comply with all City, County, State, Federal, and other codes which are applicable to this Project.

1.02 CONTRACTOR'S USE OF PREMISES

A. The CONTRACTOR shall assume full responsibility for the protection and safekeeping of products and materials at the job site. If additional storage or work areas are required, they shall be obtained by the CONTRACTOR at no additional cost to the OWNER.

Attachment: Holly Hill LS_13 Rehabilitation_Bid Set Specifications_04.30.19 (2019-R-38 : Lift Station #13 Rehabilitation)

1.03 PROJECT SEQUENCE

A. The CONTRACTOR shall establish his work sequence based on the use of crews to facilitate completion of construction and testing within the specified Contract time.

END OF SECTION

Attachment: Holly Hill LS_13 Rehabilitation_Bid Set Specifications_04.30.19 (2019-R-38 : Lift Station #13 Rehabilitation)

SECTION 01 22 00

UNIT PRICES

PART 1 – GENERAL

A. Separate payment will be made only for the items of work described herein and listed on the Bid Form. Any related work not specifically listed, but required for satisfactory completion of the work, shall be considered to be included in the scope of the appropriate listed work items.

B. The CONTRACTOR's attention is called to the fact that cleanup is considered a part of the work of construction. No payment will be made until cleanup is essentially complete.

C. No separate payment will be made for the following items and the cost of such work shall be included in the applicable pay items of work if not shown as a separate pay item.

1. Clearing and Grubbing.

2. Excavation, including necessary pavement base removal.

3. Shoring and sheeting.

4. Dewatering and disposal of surplus water.

5. Structural Fill.

6. Backfill.

7. Grading.

8. Replacement of unpaved roadways, grass, and shrubbery plots.

9. Cleanup.

10. Testing and placing system in operation.

11. Any material and equipment required to be installed and utilized for the test.

12. Pipe, structures, pavement replacement and/or appurtenances included within the limits of lump sum work.

13. Maintaining the existing quality of service during construction.

Attachment: Holly Hill LS_13 Rehabilitation_Bid Set Specifications_04.30.19 (2019-R-38 : Lift Station #13 Rehabilitation)

14. Appurtenant work as required for a complete and operable system.

15. Maintaining or detouring of traffic.

D. No payment shall be made for work constructed outside the authorized limits of work

PART 2 – MATERIALS AND EQUIPMENT

2.01 Pre-Construction Video **Bid Item 1**

Lump sum payment will be made based on delivery to the City of two copies with documentation of the video for the project route. The contract lump sum price shall be full compensation for all materials and work necessary to complete the professional videotaping in accordance with the project specifications. Construction work shall not start until DVD's are delivered and approved by the project representative.

2.02 Demolition of Existing Lift Station **Bid Item 2**

Lump sum payment shall be made for the demolition, removal, abandonment, filling, and/or other work to existing facilities as shown on the plans and as required to complete the required work. Restoration, including fill required, shall be included. Demolished facilities shall be shown on the as-builts. City shall have right to all abandoned equipment. CONTRACTOR shall deliver to City or dispose of properly. CONTRACTOR is responsible for proper disposal of all removed materials.

2.03 Bypass Pumping **Bid Item 3**

Lump sum payment will be made at the completion of the operational lift station for temporary bypass pumping. The bypass pumping system shall be duplex pumps and each pump shall be capable of passing the flows with one unit on standby. Temporary systems shall be automatic float operated and switch over to standby, have cellular alarm notification, and have a noise level no greater than 70 dba at seven (7) meters.

2.04 Complete Lift Station **Bid Item 4**

Lump sum payment will be made for the pumps, rails, top slab, hatch, new wetwell, valves, valve vault, yard piping, mechanical equipment, restoration, and all other items necessary for a complete installation. This includes all materials, equipment and labor required to construct the station as shown on the plans and described in the specifications.

2.05 Electrical **Bid Item 5**

Lump sum payment shall be made for the installation of all Electrical equipment as shown on the plans and described in the specifications. Payment will be full compensation for furnishing all plant labor, materials, equipment, and electrical work to integrate and connect the new motors, lighting, control panels, junction boxes, cables, wiring, and miscellaneous components required

Attachment: Holly Hill LS_13 Rehabilitation_Bid Set Specifications_04.30.19 (2019-R-38 : Lift Station #13 Rehabilitation)

to complete all electrical work in accordance with the contract plans, specifications, the National Electric Code and FBC. CONTRACTOR shall obtain requisite electrical permits prior to commencement of work.

2.06 Tie-Ins **Bid Item 6**

Payment will be made at the applicable unit price for the cost of the "tie-in" performed. The lump sum price will be full compensation for all pipe, valves, fittings, materials and labor required to satisfactorily accomplish this item as detailed in the plans and specifications.

2.07 DIP Fittings (Add or Delete) **Bid Item 7**

Payment shall be made at the contract unit price per pound for all ductile iron/cast iron fittings installed by the CONTRACTORs as directed by the ENGINEER. This item is included in the CONTRACTOR cover the cost of additional fittings that are not shown on the project plans which are required to meet modified routing due to field conditions. This item includes the cost of providing and installing "restrained joints" at both ends of each additional fitting installed.

2.08 Cap and Abandon Existing Force Main **Bid Item 8**

Lump sum payment shall be made for satisfactory abandonment of the existing lines as shown on the plans. Payment shall be full compensation for grouting the abandoned portion of the existing force main as shown on the plans.

2.09 Permit Allowance **Bid Item 9**

An allowance is established to pay costs associated with building permit fees and ancillary costs associated with construction of the lift station improvements. No provisions for mark-up are included within the allowance.

2.10 As-Built Plans **Bid Item 10**

Lump sum payment will be made based on delivery of record drawings produced by a licensed surveyor conforming to the specifications. Periodical record drawings shall be submitted with each pay estimate on which the ENGINEER shall rely to ensure the improvements are constructed in accordance with the design locations and elevations. Progress payments submitted without updated record drawings to document work constructed that pay period shall be a basis for rejection of the pay request until such time as adequate record drawings are submitted.

2.11 MOT **Bid Item 11**

Payment for traffic control will be made at the contract lump sum price which price and payment shall be full compensation for the material, labor, equipment, and all other related work necessary to complete required traffic control during the period of construction affecting the flow of traffic within the project area or adjacent collector roads and highways. This item shall include the costs to prepare approved traffic control plans as well as the full cost to implement

Attachment: Holly Hill LS_13 Rehabilitation_Bid Set Specifications_04.30.19 (2019-R-38 : Lift Station #13 Rehabilitation)

the approved plans. For areas under County or State control, traffic control shall be provided in accordance with each entity's requirements. Payment shall be made based on the percent of the total construction cost completed.

2.12 Restoration **Bid Item 12**

At the completion of construction, lump sum payment shall be made for site restoration to provide positive drainage, acceptable finish grades, base and pavement restorations. Sod shall match existing materials or as called out within the plans and specifications. All pavement, sod, grading for a final site acceptable to the City and their project representative are included in this pay item.

PART 3 – EXECUTION (NOT USED)

END OF SECTION

Attachment: Holly Hill LS_13 Rehabilitation_Bid Set Specifications_04.30.19 (2019-R-38 : Lift Station #13 Rehabilitation)

SECTION 01 29 76

PROGRESS PAYMENT PROCEDURES

PART 1 – GENERAL

1.01 DESCRIPTION

A. Scope of Work: Submit Application for payment to the ENGINEER on accordance with schedule established by Conditions of the Contract and Agreement between OWNER and CONTRACTOR. CONTRACTOR shall use the Application and Certificate for Payment Form included on Section 00 84 40 as the official pay request form.

B. Related Requirements Described Elsewhere:

1. Agreement: Section 00 50 00.

2. Construction Progress Schedule: Section 01 31 00.

3. Schedule of Values: Section 01 37 00.

4. Photographic Documentation: Section 01 32 33.

5. Project Record Documents: Section 01 78 39.

1.02 FORMAT REQUIRED

A. Submit applications typed on the form provided in Division 0, Section 00 84 40: Application and Certificate for Payment Form, with itemized data typed on eight and one-half inch by 11 inch (8-1/2" x 11") or white paper continuation sheets.

B. Provide itemized data on continuation sheets of format, schedules, line items, and values specified on the Application and Certificate for Payment Form. The CONTRACTOR shall use the item descriptions and contract values included in schedule of values, approved, and accepted by the ENGINEER as a basis for preparation of the Application for Payment Form.

1.03 PREPARATION OF APPLICATION FOR EACH PROGRESS PAYMENT

A. Application Form:

1. Fill in required information, including that for Change Orders executed prior to date of submittal of application.

Attachment: Holly Hill LS_13 Rehabilitation_Bid Set Specifications_04.30.19 (2019-R-38 : Lift Station #13 Rehabilitation)

2. Fill in percent complete for each activity and dollar values to agree with respective percents.

3. Execute certification with signature of a responsible officer of CONTRACTOR.

B. Continuous Sheets:

1. Fill in total of all scheduled component items of the Work, with item number and schedule dollar value for each item.

2. Fill in dollar value in each column for each scheduled line item when Work has been performed or products stored. Round off values to nearest dollar, or as specified for Schedule of Values.

3. List each Change Order executed prior to date of submission, at the end of the continuation sheets. List by Change Order Number, and description, as for an original component item Work.

4. To receive approval for payment on component material stored on site, submit copies of the original invoices with Application and Certificate for Payment.

5. As provided for in the Application and Certificate for Payment Form, the CONTRACTOR shall certify, for each current pay request, that all previous progress payments received from the OWNER, under this Contract, have been applied by the CONTRACTOR to discharge in full, all obligations of the CONTRACTOR in connection with Work covered by prior Applications for Payment, and all materials and equipment incorporated into the Work are free and clear of all liens, claims, security interest, and encumbrances. CONTRACTOR shall attach to each Application and Certificate for Payment like affidavits by all Subcontractors.

1.04 SUBSTANTIATING DATA FOR PROGRESS PAYMENTS

A. CONTRACTOR shall submit suitable information, with a cover letter identifying:

1. Project.

2. Application number and date.

3. Detailed list of enclosures.

Attachment: Holly Hill LS_13 Rehabilitation_Bid Set Specifications_04.30.19 (2019-R-38 : Lift Station #13 Rehabilitation)

4. For stored products:

   a) Item number and identification as shown on application.
   b) Description of specific material.

B. Submit one (1) copy of data and cover letter for each copy of application.

C. The CONTRACTOR is to maintain an updated set of drawings to be used as record drawings in accordance with Section 01 78 39: Project Record Documents. As a prerequisite for monthly progress payments, the CONTRACTOR is to exhibit the updated record drawings for review by the OWNER and the ENGINEER.

D. Each monthly application for payment shall incorporate the corresponding "monthly progress status report" and updated construction schedule, prepared in accordance with the requirements of Section 01 31 00: Construction Progress Schedule.

E. As a prerequisite for payment, CONTRACTOR shall submit a duly executed letter from surety consenting to payment due and progress to date.

F. Provide construction photographs in accordance with Section 01 32 33: Photographic Documentation.

1.05 PREPARATION OF APPLICATION FOR FINAL PAYMENT

A. Fill in application form as specified for progress payments. Provide information as required by the General Conditions and Section 01 77 00: Closeout Procedures.

B. Furnish evidence of completed operations and insurance in accordance with the General Conditions.

C. Provide CONTRACTOR's Final Release of Lien (Section 00 84 90) and other close-out submittals as required by the General Conditions.

1.06 SUBMITTAL PROCEDURE

A. Submit Application for Payment to the ENGINEER at the time stipulated in the Agreement, or as agreed to at the pre-construction meeting. Review the percents complete with the ENGINEER and resolve any conflict or discrepancies.

B. Number of copies for each Application for Payment: Five (5) copies plus additional copies for CONTRACTOR's needs.

Attachment: Holly Hill LS_13 Rehabilitation_Bid Set Specifications_04.30.19 (2019-R-38 : Lift Station #13 Rehabilitation)

C. When the ENGINEER finds the Application and Certificate for Payment Form is properly completed and correct, he will execute the Certificate for Payment and transmit the forms to the OWNER, with a copy to the CONTRACTOR.

PART 2 – PRODUCTS (NOT USED)

PART 3 – EXECUTION (NOT USED)

END OF SECTION

Attachment: Holly Hill LS_13 Rehabilitation_Bid Set Specifications_04.30.19 (2019-R-38 : Lift Station #13 Rehabilitation)

SECTION 01 31 00
CONSTRUCTION PROGRESS SCHEDULES

PART 1 - GENERAL

1.01 DESCRIPTION

A. Scope of Work:

1. Promptly after award of the Contract, prepare and submit to the Engineer estimated construction progress schedules demonstrating complete fulfillment of all Contract requirements utilizing a Critical Path Method (hereinafter referred to as CPM) in planning, coordinating, and performing the Work under this Contract (including all activities of subcontractors, equipment vendors, and suppliers). The principles and definition of CPM terms used herein shall be as set forth in the Associated General Contractors of America (AGC) publication, The Use of CPM in Construction, A Manual for General Contractors and the Construction Industry, latest edition, but the provisions of this Specification shall govern the planning, coordinating, and performance of the Work.

2. Submit revised progress schedules on a monthly basis. No partial payments shall be approved until there is an approved construction progress schedule on hand.

B. Related Requirements Described Elsewhere:

1. Conditions of the Contract.
2. Summary of Work: Section 01 11 00.
3. Project Meetings: Section 01 31 19.
4. Application for Payment: Section 01 02 70
5. Shop Drawings: Section 01 33 23.
6. Schedule of Values: Section 01 37 00.

1.02 QUALIFICATIONS

A. A statement of computerized CPM capability shall be submitted in writing prior to the award of the Contract and shall verify that either Contractor's organization has in-house capability to use the CPM technique or that Contractor will employ a CPM consultant who is so qualified.

B. In-house capability shall be verified by description of construction projects to which Contractor or Contractor's consultant has successfully applied computerized CPM

Attachment: Holly Hill LS_13 Rehabilitation_Bid Set Specifications_04.30.19 (2019-R-38 : Lift Station #13 Rehabilitation)

and shall include at least two (2) projects valued at least half the expected value of this project.

1.03 FORM OF SCHEDULES

A. Prepare schedules in the form of a horizontal bar chart.

1. Provide a separate horizontal bar for each trade or operation within each structure or item.

2. Horizontal time scale:

a. Show starting and completion dates for each activity in terms of the number of days after Notice to Proceed. All completion dates shown shall be within the period specified for contract completion.

b. Identify the first work day of each month.

2. Scale and Spacing: Sufficient to allow space for notations and future revisions.

4. Maximum Sheet Size: 24 inches by 36 inches.

B. Format of Listings: The chronological order of the start of each item of work for each structure.

C. Identification of Listings: By major specification section numbers as applicable and by utility.

D. Construction Progress Schedules shall be computer generated using software equal to Primavera Project Planner for Windows by Primavera Systems, Inc., Bala Cynwyd, P.A., or approved equal.

1.04 CONTENT OF SCHEDULES

A. Construction Progress Schedule:

1. Show the complete sequence of construction by activity and by structure.

2. Show the dates for the beginning and completion of each major element of construction in no more than a two (2) week increment scale. Specifically list, but do not limit to:

a. Shop Drawing Schedule.

Attachment: Holly Hill LS_13 Rehabilitation_Bid Set Specifications_04.30.19 (2019-R-38 : Lift Station #13 Rehabilitation)

b. Installation of temporary facilities.
c. Clearing.
d. Demolition
e. Subcontractor work
f. Utility Installations
g. Paving
h. Start-Up
i. Project closeout

3. Show projected percentage of completion for each item, as of the first day of each month.

4. Show projected dollar cash flow requirements for each month of construction and for each activity as indicated by the approved Schedule of Values.

B. Submittals for construction progress schedules shall be in accordance with Section 01340: Shop Drawings. Indicate on the schedule the following:

1. The dates for Contractor's submittals.
2. The date submittals will be required for Owner-furnished products, if applicable.
3. The date approved submittals will be required from the Engineer.

C. A typewritten list of all long lead items (equipment, materials, etc.).

D. To the extent that the progress schedule or any revised progress schedule shows anything not jointly agreed upon or fails to show anything jointly agreed upon, it shall not be deemed to have been approved by the Engineer. Failure to include any element of work required for the performance of this Contract shall not excuse the Contractor from completing all work required within any applicable completion date, notwithstanding the Engineer's approval of the progress schedule.

E. Scheduling Constraints: The work within Owner's property must be completed within the maximum number of days start to finish, as indicated in the Contract. Additionally, work must proceed on a continuous basis, without stoppages, except for nights and weekends. There shall be no lapses between phases of construction.

1.05 PROGRESS REVISIONS

A. Indicate progress of each activity to date of submission.

B. Show changes occurring since previous submission of schedule:

1. Major changes in scope.

Attachment: Holly Hill LS_13 Rehabilitation_Bid Set Specifications_04.30.19 (2019-R-38 : Lift Station #13 Rehabilitation)

2. Activities modified since previous submission.
3. Revised projections of progress and completion.
4. Other identifiable changes.

C. Provide a narrative report as needed to define:

1. Problem areas, anticipated delays, and the impact on the schedule.
2. Corrective action recommended, and its effect.
3. The effect of changes on schedules of other prime contractors.

D. If the Work falls behind the critical path schedule by two (2) weeks or more, the Contractor shall prepare a recovery schedule.

1.06 SUBMISSIONS

A. Submittal Requirements.

1. Logic network and/or time-phased bar chart, computer generated.

2. Computerized network analysis:

a. Sort by early start
b. Sort by float
c. Sort by predecessor/successor

3. Narrative description of the logic and reasoning of the schedule.

B. Time of Submittals.

Within ten (10) working days after Notice to Proceed, Contractor shall submit a network diagram describing the activities to be accomplished in the project and their dependency relationships, (predecessor/successor) as well as a tabulated schedule as herein defined. The total length of time indicated on the initial CPM schedule shall equal the exact number of days in the Contract Time as defined in Section 00 50 00: Agreement. The schedule produced and submitted shall also indicate calendar dates, including project starting and completion dates, based on the Contract Commencement and completion dates indicated in the Notice to Proceed. The Engineer will complete the review of the complete schedule within fifteen (15) working days after receipt. During the review process, the Engineer may meet with a representative of Contractor to review the proposed plan and schedule to discuss any clarifications that may be necessary.

C. Within ten (10) working days after the conclusion of the Engineer's review period, Contractor shall revise the network diagram as required and resubmit the network

Attachment: Holly Hill LS_13 Rehabilitation_Bid Set Specifications_04.30.19 (2019-R-38 : Lift Station #13 Rehabilitation)

diagram and a tabulated schedule produced therefrom. The revised network diagram and tabulated schedule shall be reviewed and accepted or rejected by the Engineer within fifteen (15) working days after receipt. The network diagram and tabulated schedule, when accepted by the Engineer, shall constitute the project work schedule unless a revised schedule is required due to substantial changes in the Work, a change in Contract Time or a recovery schedule is required and requested.

D. Acceptance. The finalized schedule will be acceptable to the Engineer when, in the opinion of the Engineer, it demonstrates an orderly progression of the Work to completion in accordance with the Contract Documents. Such acceptance will neither impose on the Engineer responsibility for the progress or scheduling of the Work nor relieve Contractor from full responsibility. The finalized schedule of shop drawing submittals will be acceptable to the Engineer when, in the opinion of the Engineer, it demonstrates a workable arrangement for processing the submittals in accordance with the requirements. The finalized Schedule of Values (lump sum price breakdown), as applicable, will be acceptable to the Engineer as to form and content when, in the opinion of the Engineer, it demonstrates a substantial basis for equitably distributing the Contract Price. When the network diagram and tabulated schedule have been accepted, the Contractor shall submit to the Engineer six (6) copies of the time-scaled network diagram, six (6) copies of a computerized tabulated schedule in which the activities have been sequenced by numbers, six (6) copies of a computerized tabulated schedule in which the activities have been sequenced by early starting date, and six (6) copies of a computerized, tabulated schedule in which activities have been sequenced by total float, and six (6) copies sorted by predecessor/successor.

E. Revised Work Schedules. Contractor, if requested by the Engineer, shall provide a revised work schedule if, at any time, the Engineer considers the completion date to be in jeopardy because of "activities behind schedule." The revised work schedule shall include a new diagram and tabulated schedule conforming to the requirements of Paragraph 1.09 herein, designed to show how Contractor intends to accomplish the Work to meet the completion date. The form and method employed by Contractor shall be the same as for the original work schedule. No payment will be made if activities fall more than two (2) weeks behind schedule and a revised work schedule is not furnished.

F. Schedule Revisions. The Engineer may require Contractor to modify any portions of the work schedule that become infeasible because of "activities behind schedule" or for any other valid reason. An activity that cannot be completed by its original latest completion date shall be deemed to be behind schedule. No change may be made to the sequence, duration, or relationships of any activity without approval of the Engineer.

Attachment: Holly Hill LS_13 Rehabilitation_Bid Set Specifications_04.30.19 (2019-R-38 : Lift Station #13 Rehabilitation)

1.07 DISTRIBUTION

A. Distribute copies of the reviewed schedules to:

1. Engineer.
2. Jobsite file.
3. Subcontractors.
4. Other concerned parties.
5. Owner (two copies).

B. Instruct recipients to report promptly to the Contractor, in writing, any problems anticipated by the projections shown in the schedules.

1.08 CHANGE ORDERS

A. Upon approval of a change order, the approved changes shall be reflected in the next scheduled revision or update submittal of the construction progress schedule by the Contractor.

1.09 CPM STANDARDS

A. CPM, as required by this Section, shall be interpreted to be generally as outlined in the Associated General Contractors (AGC) publication, The Use of CPM in Construction, A Manual for General Contractors and the Construction Industry, Copyright 1976.

B. Work schedules shall include a graphic network and computerized, tabulated schedules as described below. To be acceptable the schedule must demonstrate the following:

1. A logical succession of work from start to finish.

2. Definition of each activity. Activities shall be identified by major specification section numbers, as applicable, and by major utility.

3. A logical flow of work crews/equipment (crews are to be defined by manpower category and man-hours; equipment by type and hours).

4. Show all work activities and interfaces including submittals as well as major material and equipment deliveries.

Attachment: Holly Hill LS_13 Rehabilitation_Bid Set Specifications_04.30.19 (2019-R-38 : Lift Station #13 Rehabilitation)

C. Networks.

1. The CPM network, or diagram, shall be in the form of a time-scaled diagram of the customary activity-on-type and may be divided into a number of separate pages with suitable notation relating the interface points among the pages. Notation on each activity line shall include a brief work description and duration, as described in Paragraph 1.09, D. herein.

2. All construction activities and procurement shall be indicted in a time-scaled format, and a calendar shall be shown on all sheets along the entire sheet length. Each activity arrow shall be plotted so the beginning and completion dates of said activity can be determined graphically by comparison with the calendar scale. All activities shall be shown using the symbols that clearly distinguish between critical path activities, non-critical path activities, and float for each non-critical activity. All non-critical path activities shall show estimated performances time and float time in scaled form.

D. The duration indicated for each activity shall be in calendar days and shall represent the single best time considering the scope of the work and resources planned for the activity including time for inclement weather. Except for certain non-labor activities, such as curing concrete or delivering materials, activity durations shall not exceed fourteen (14) days nor be less than one (1) day unless otherwise accepted by the Engineer.

E. Tabulated Schedules. The initial schedule shall include the following minimum data for each activity.

1. Activity Beginning and Ending Numbers (i-j numbers) (single activity numbers may be used).
2. Duration.
3. Activity Description.
4. Early Start Date (Calendar Dated).
5. Late Start Date (Calendar Dated).
6. Early Finish Date (Calendar Dated).
7. Late Finish Date (Calendar Dated).
8. Identified Critical Path.
9. Total Float (Note: No activity may show more than 20 days float).
10. Cost of Activity.
11. Equipment Hours, by type; Man-Power Hours, by crew or trade.

F. Project Information. Each tabulation shall be prefaced with the following summary data:

Attachment: Holly Hill LS_13 Rehabilitation_Bid Set Specifications_04.30.19 (2019-R-38 : Lift Station #13 Rehabilitation)

1. Project Name.
2. Contractor.
3. Type of Tabulation (Initial or Updated).
4. Project Duration.
5. Project Scheduled Completion Date.
6. Effective or Starting Date of the Schedule.
7. New Project Completion Date and Project Status (if an updated or revised schedule).
8. Actual Start Date and Actual Finish Date (for all updated schedules.)

1.10 SCHEDULE MONITORING

A. At not less than monthly intervals or when specifically requested by Engineer, Contractor shall submit to the Engineer a computer printout of an updated schedule for those activities that remain to be completed. Typically, the updated schedule will be submitted with the application for payment as specified below.

B. The updated schedule shall be submitted in the form, sequence, and number of copies requested for the initial schedule.

1.11 PROGRESS MEETINGS

A. For the monthly progress meeting, Contractor shall submit a revised CPM schedule and a three-week look-ahead schedule, showing all activities completed, in progress, uncompleted, or scheduled to be worked during the weeks. The three weeks include the current week plus the next two weeks. All activities shall be from the approved CPM and must be as shown on the CPM unless behind or ahead of schedule. One copy of the revised CPM schedule shall be submitted with each copy of that month's application for payment, six (6) copies minimum.

PART 2 - PRODUCTS (NOT USED)

PART 3 - EXECUTION (NOT USED)

END OF SECTION

Attachment: Holly Hill LS_13 Rehabilitation_Bid Set Specifications_04.30.19 (2019-R-38 : Lift Station #13 Rehabilitation)

SECTION 01 31 19

PROJECT MEETINGS

PART 1 – GENERAL

1.01 DESCRIPTION

A. Scope of Work:

1. The CONTRACTOR shall coordinate with the ENGINEER to schedule and administer the preconstruction meeting, resident meeting, utility coordination, periodic progress meetings, and specifically called meetings throughout the progress of the Work.

2. The ENGINEER shall:

a. Prepare agenda for meetings.
b. Make physical arrangements for meetings.
c. Preside at meetings.
d. Take and distribute meeting minutes.

3. The CONTRACTOR shall:

a. Attend all meetings along with pertinent subcontractors and suppliers.
b. Appoint attendees who are qualified and authorized to act on behalf of the entity each represents.
c. Provide requested information at meetings.

4. The OWNER shall:

a. Attend meetings to ascertain that the Work is expedited consistent with Contract Documents and construction schedules.

B. Related Requirements Described Elsewhere:

1. Construction Progress Schedules: Section 01 31 00.

2. Shop Drawings: Section 01 33 23.

3. Project Record Documents: Section 01 78 39.

Attachment: Holly Hill LS_13 Rehabilitation_Bid Set Specifications_04.30.19 (2019-R-38 : Lift Station #13 Rehabilitation)

1.02 PRECONSTRUCTION MEETING

A. Purpose: To initiate coordination of contractual requirements prior to start of work.

B. Scheduling: ENGINEER will schedule a preconstruction meeting after execution of the Contract. Invites shall be sent via electronic mail.

C. Location: A local site, convenient for all parties, designated by the ENGINEER.

D. Attendance:

1. OWNER's representative.

2. ENGINEER and his sub-consultants.

3. Resident project representative.

4. CONTRACTOR and his superintendent.

5. Major subcontractors.

6. Representatives of major suppliers and manufacturers, as appropriate.

7. Governmental and franchised utility representatives, as appropriate.

8. Permit agency representatives, as appropriate.

9. Funding agency representatives, as appropriate.

10. Others as requested by the CONTRACTOR, OWNER, and ENGINEER.

C. Suggested Agenda:

1. Introductions and Roles.

2. Contract Execution and Dates.

a. Contracts.
b. Contract Time/Dates.
c. Copies of Conformed Documents.

3. Communications.

a. Lines of Communication.
b. Coordination Meetings.

Attachment: Holly Hill LS_13 Rehabilitation_Bid Set Specifications_04.30.19 (2019-R-38 : Lift Station #13 Rehabilitation)

c. Contact List.
d. Requests for Information (RFIs).

4. Preconstruction Matters.

a. Submittals.
b. Material Acquisition.
c. Mobilization.
d. Permitting.

5. Construction/Coordination.

a. Working Days/Hours.
b. Change Orders.
c. Locating Existing Facilities.
d. Demolition.
e. Testing.
f. Updated Schedules.

6. Pay Requests.

a. Process.
b. Schedule of Values.
c. Stored Materials.
d. Preliminary As-Builts.

7. Contract Closeout.

a. Substantial Completion.
b. Punch-list.
c. Final Acceptance.
d. Warranty.
e. Final Payment.

1.03 RESIDENT MEETING(S)

A. Purpose: To present construction approach to effected residents and to allow residents to ask questions concerning such.

B. Scheduling: ENGINEER/OWNER will schedule resident meeting(s) after preconstruction meeting is held, but before construction begins. Invites shall be distributed via electronic mail and hard copy flyers. CONTRACTOR shall assist in the distribution of flyers.

C. Location: A local site, convenient for all parties, designated by the ENGINEER/OWNER.

Attachment: Holly Hill LS_13 Rehabilitation_Bid Set Specifications_04.30.19 (2019-R-38 : Lift Station #13 Rehabilitation)

D. Attendance:

1. OWNER's representative.
2. ENGINEER.
3. Resident project representative.
4. CONTRACTOR and his superintendent.
5. Major subcontractors, as appropriate.
6. Residents.

E. Suggested Agenda: To be determined by ENGINEER/OWNER.

1.04 UTIITY COORDINATION MEETING(S)

A. Purpose: To discuss the coordination of the construction with existing and proposed utilities.

B. Scheduling: ENGINEER will schedule utility coordination meeting(s) as needed. These meetings may be held in conjunction with Progress Meetings. Invites shall be distributed via electronic mail.

C. Location: A local site, convenient for all parties, designated by the ENGINEER.

D. Attendance:

1. OWNER's representative.
2. ENGINEER.
3. Resident project representative.
4. CONTRACTOR and his superintendent.
5. Major subcontractors, as appropriate.
6. Utility representatives.

E. Suggested Agenda: To be determined by ENGINEER.

Attachment: Holly Hill LS_13 Rehabilitation_Bid Set Specifications_04.30.19 (2019-R-38 : Lift Station #13 Rehabilitation)

1.05 PROGRESS MEETINGS

A. Purpose: To discuss the progress of the construction and projected work activities.

B. Scheduling: ENGINEER will schedule progress meetings on a regular basis at a minimum frequency of once per week and at a maximum frequency of once per month. Invites shall be distributed via electronic mail.

C. Location: A local site, convenient for all parties, designated by the ENGINEER.

D. Attendance:

1. OWNER's representative.

2. ENGINEER and sub-consultants, as appropriate.

3. Resident project representative.

4. CONTRACTOR and his superintendent.

5. Major subcontractors, as appropriate.

6. Utility representatives, as appropriate.

7. Permit agency representatives, as appropriate.

8. Funding agency representatives, as appropriate.

E. Suggested Agenda:

1. Work progress since last meeting.

2. Work scheduled this period.

3. Field observations, problems, and conflicts.

4. Construction schedule.

a. Status of current schedule.
b. Issues impacting schedule.
c. Fabrication and delivery schedules.
d. Corrective measures to regain projected schedule.

5. Submittals.

6. RFIs.

7. Pending Changes and Substitutions.

Attachment: Holly Hill LS_13 Rehabilitation_Bid Set Specifications_04.30.19 (2019-R-38 : Lift Station #13 Rehabilitation)

8. Quality Control.

9. Pay Requests.

10. Other Business.

PART 2 – PRODUCTS (NOT USED)

PART 3 – EXECUTION (NOT USED)

END OF SECTION

Attachment: Holly Hill LS_13 Rehabilitation_Bid Set Specifications_04.30.19 (2019-R-38 : Lift Station #13 Rehabilitation)

SECTION 01 32 33

PHOTOGRAPHIC DOCUMENTATION

PART 1 – GENERAL

1.01 SCOPE OF WORK

A. Scope of Work: The CONTRACTOR shall employ a competent photographer to take construction record photographs and video recording prior to start of work and periodically during the course of the Work.

B. Related Requirements Described Elsewhere:

1. Project Requirements: Section 01 00 00.

2. Summary of Work: Section 01 11 00.

3. Location, Scope, and Special Requirements: Section 01 35 00.

4. Project Record Documents: Section 01 78 39.

1.02 PHOTOGRAPHY REQUIRED

A. Digital photographs shall be taken in conformance with this Section shall be furnished to the ENGINEER with each pay request. Failure to comply will result in rejection of pay request.

B. Digital photographs shall be taken at each of the major stages of construction and as directed by the ENGINEER.

C. Digital photographs may be taken by the CONTRACTOR's personnel but must be of professional quality as herein specified. Photographs which are deemed unsatisfactory will be rejected and retakes will be required.

D. Views and Quantities Required:

1. CONTRACTOR shall supply Digital pictures on a minimum four (4) GB USB Flash Drive. One (1) view of each activity, as directed by the Resident Project Representative, up to a limit of ten activities photographed per month.

2. One (1) Digital picture of five (5) views of overall Project site monthly including any change of condition, any structural changes, relocation, and

Attachment: Holly Hill LS_13 Rehabilitation_Bid Set Specifications_04.30.19 (2019-R-38 : Lift Station #13 Rehabilitation)

all conflicts with utilities, as directed by the Resident Project Representative.

E. Digital pictures shall contain and comply with the following:

1. The CONTRACTOR shall maintain all Digital copies of photos for the entire Project and then shall convey the disks to the OWNER at the completion of the Project.

2. All disks shall be properly labeled with project name, project number, project start and end dates, CONTRACTOR's name, and OWNER's name for which work was completed.

3. The photographer shall agree to furnish additional disks to OWNER and the ENGINEER at commercial rates applicable at time of purchase.

1.03 COST OF PHOTOGRAPHY

A. The CONTRACTOR shall pay costs for specified Digital photography and any required prints.

PART 2 – PRODUCTS

2.01 DIGITAL PHOTOGRAPH AND/OR PRINTS

A. Type of Print (if required):

1. Paper: Single weight, color print paper.

2. Finish: Smooth surface, glossy.

3. Size: Four inch x six inch (4" x 6") for construction photos.

B. Identify each photograph with the following (each print shall have information listed on back of each photograph and digital pictures shall have coordinating log sheet with information):

1. Name of project.

2. Orientation of view.

3. Date and time of exposure.

4. Name and address of photographer.

5. Each photograph shall be numbered in consecutive order.

Attachment: Holly Hill LS_13 Rehabilitation_Bid Set Specifications_04.30.19 (2019-R-38 : Lift Station #13 Rehabilitation)

Note: Digital prints shall be used to clarify as-builts.

PART 3 – EXECUTION

3.01 TECHNIQUE

A. Factual Presentation.

B. Correct exposure and focus.

1. High resolution and sharpness (minimum 800 DPI).

2. Maximum depth-of-field.

3. Minimum distortion.

3.02 VIEWS REQUIRED

A. Digital photographs shall adequately illustrate condition of construction and state of progress.

1. At successive periods of photography, take at least one (1) digital photograph from the same overall view as previously photographed.

2. Consult with the ENGINEER at each period of digital photography for instructions concerning views required.

3.03 DELIVERY OF PRINTS

A. Deliver photographs, on USB Flash Drive with coordinating log, to the ENGINEER as attachment to Application for Payment. (Flash Drive will become property of ENGINEER and/or client)

B. Distribution of construction photographs, as soon as processed, is anticipated to be as follows:

1. ENGINEER [one (1) set].

2. Project record file [one (1) set to be stored by CONTRACTOR until the end of the project which shall be delivered with Project Record Documents as specified in Section 01 78 39].

3. CONTRACTOR [one (1) set].

END OF SECTION

Attachment: Holly Hill LS_13 Rehabilitation_Bid Set Specifications_04.30.19 (2019-R-38 : Lift Station #13 Rehabilitation)

SECTION 01 32 36

VIDEO MONITORING AND DOCUMENTATION

PART 1 – GENERAL

1.01 SCOPE OF WORK

A. Furnish all labor, materials, and equipment to furnish color audio video recording of the project site as specified herein.

B. Related Requirements Described Elsewhere:

1. Project Requirements: Section 01 00 00.

2. Summary of Work: Section 01 11 00.

3. Location, Scope, and Special Requirements: Section 01 35 00.

4. Project Record Documents: Section 01 78 39.

C. Furnish to the ENGINEER an original and one copy of a continuous color audio video recording on DVD around the entire project site. The recording shall be taken prior to any construction activity.

D. The ENGINEER reserves the right to reject the audio video recording because of poor quality, unintelligible audio or uncontrolled pan or zoom. Any DVD rejected by the ENGINEER shall be redone at no cost to the OWNER. Under no circumstances shall construction begin until the ENGINEER has received and accepted the audio video DVD(s).

E. The recording shall be performed by a qualified, established audio video recording firm, knowledgeable in construction practices which have a minimum of one (1) year experience in the implementation of established inspection procedures.

1.02 COLOR AUDIO VIDEO SURVEY

A. Complete coverage shall include all surface features located within the project site, easement areas, and adjacent private properties covering the extent of the project site to be utilized by the CONTRACTOR and will be supported by appropriate audio description made simultaneously with video coverage. Such coverage shall include, but not be limited to, all existing driveways, sidewalks, curbs, ditches, roadways including viaducts, landscaping, trees, culverts,

Attachment: Holly Hill LS_13 Rehabilitation_Bid Set Specifications_04.30.19 (2019-R-38 : Lift Station #13 Rehabilitation)

headwalls, and retaining walls, and buildings located within the area. Video coverage shall extend to the maximum height of all structures within this zone.

B. All recording shall be done during times of good visibility. No recording shall be done during periods of visible precipitation, or when more than ten percent of the ground area is covered with standing water, unless otherwise authorized by OWNER.

1.03 COST OF VIDEOGRAPHY

A. The CONTRACTOR shall pay costs for specified videography and any required digital copies.

PART 2 – PRODUCTS

2.01 AUDIO AND VIDEO

A. CONTRACTOR shall furnish continuous color, audio-video DVD(s) of professional quality.

B. Pre- and post-construction recording should be recorded on a DVD-R disk, 4.7 gigabits, recorded in SP mode (120 mins) or better (HQ, HSP), disk must be finalized with no editing of information and must be properly marked with date, location, CONTRACTOR's name, job site, and name of Videographer. The date and time stamp must be visible at all times on image and disk must be stored in an individual sleeve.

C. Each DVD shall begin with the OWNER's name, Contract name and number, CONTRACTOR's name, date, and location information such as street name, direction of travel, viewing side, etc.

D. Information appearing on the DVD must be continuous and run simultaneously by computer generated transparent digital information. No editing or overlaying of information at a later date will be acceptable.

E. Digital information will be as follows:

1. Upper left corner:

a. Name of CONTRACTOR.
b. Day, date, and time.
c. Name of project.

Attachment: Holly Hill LS_13 Rehabilitation_Bid Set Specifications_04.30.19 (2019-R-38 : Lift Station #13 Rehabilitation)

2. Lower left corner:

   a. Route of travel.
   b. Viewing side.
   c. Direction of travel.
   d. Stationing.

F. Time must be accurate and continuously generated.

G. Engineering station numbers must be continuous, be accurate and correspond to project stationing. The symbols should be the standard engineering symbols (i.e. 16+64).

H. Written documentation must coincide with the information on the DVD so as to make easy retrieval of location sought for at a later date.

I. The video system shall have the capability to transfer individual frames of video electronically into hard copy prints or photography negatives.

J. Audio shall be recorded at the same time as the video recording and shall have the same information as on the viewing screen. Special commentary will be given for unusual conditions of buildings, sidewalks and curbing, foundations, trees, and shrubbery, etc.

K. All DVDs and boxes shall bare labels with the following information:

   1. Recording Number.

   2. OWNER's Name.

   3. Date of Recording.

   4. Project Name and Number.

   5. Location and Standing Limit of DVD.

L. Prior to commencement of audio video recording, the CONTRACTOR shall notify the ENGINEER in writing when and where the audio video recording will begin. The ENGINEER may provide a designated representative to accompany and oversee coverage of all recording operations. Audio video recording completed without an ENGINEER representative present will be unacceptable unless specifically authorized by the ENGINEER.

Attachment: Holly Hill LS_13 Rehabilitation_Bid Set Specifications_04.30.19 (2019-R-38 : Lift Station #13 Rehabilitation)

PART 3 – EXECUTION

3.01 TECHNIQUE

A. Factual Presentation.

B. Correct exposure and focus.

1. High resolution and sharpness.

2. Maximum depth-of-field.

3. Minimum distortion.

3.02 VIEWS REQUIRED

A. Videos shall adequately illustrate condition of construction and state of progress.

1. At successive periods of videography, take at least one video from the same overall view as previously videoed.

2. Consult with the ENGINEER at each period of videography for instructions concerning views required.

3.03 DELIVERY OF VIDEOS

A. Deliver videos, on USB Flash Drive with coordinating log, to the ENGINEER as attachment to Application for Payment. (Flash Drive will become property of ENGINEER and/or client)

B. Distribution of construction videos, as soon as processed, is anticipated to be as follows:

1. ENGINEER [one (1) set].

2. Project record file [one (1) set to be stored by CONTRACTOR until the end of the project which shall be delivered with Project Record Documents as specified in Section 01 78 39].

3. CONTRACTOR [one (1) set].

END OF SECTION

Attachment: Holly Hill LS_13 Rehabilitation_Bid Set Specifications_04.30.19 (2019-R-38 : Lift Station #13 Rehabilitation)

SECTION 01 33 23

SHOP DRAWINGS

PART 1 – GENERAL

1.01 REQUIREMENTS INCLUDED

A. The CONTRACTOR shall submit to the ENGINEER for review and approval, such working drawings, shop drawings, test reports and data on materials and equipment, and material samples materials list, certificates and affidavits as are required for the proper control of work, including but not limited to those working drawings, shop drawings, data and samples for materials and equipment specified elsewhere in the Specifications and in the Contract Drawings.

B. Within 20 calendar days after the Effective Date of the Agreement, the CONTRACTOR shall submit to the ENGINEER a complete materials list of preliminary data on items for which Shop Drawings are to be submitted. Included in this materials list shall be the names of all proposed manufacturers furnishing specified items. Review of this list by the ENGINEER shall in no way be expressed or implied relief to the CONTRACTOR from submitting complete Shop Drawings and providing material, equipment, etc., fully in accordance with the Specifications. This procedure is required in order to expedite final review of Shop Drawings.

C. The CONTRACTOR shall maintain an accurate updated submittal log and will bring this log to each scheduled progress meeting with the OWNER and the ENGINEER. This log shall include the following items:

1. Submittal – Description and Number assigned.

2. Date to ENGINEER.

3. Date returned to CONTRACTOR (from ENGINEER).

4. Status of Submittal (Approved, Approved as Noted, Not Approved/Resubmit).

5. Date of Re submittal and Return (as applicable).

6. Date material release (for fabrication).

7. Projected date of fabrication.

8. Projected date of delivery to site.

Attachment: Holly Hill LS_13 Rehabilitation_Bid Set Specifications_04.30.19 (2019-R-38 : Lift Station #13 Rehabilitation)

9. Status of O&M manuals submitted.

10. Specification Section.

11. Drawings Sheet Number.

1.02 CONTRACTOR'S RESPONSIBILITY

A. It is the duty of the CONTRACTOR to check all drawings, data and samples prepared by or for him before submitting them to the ENGINEER for review. Each and every copy of the drawings and data shall bear CONTRACTOR's stamp and signature showing that they have been so checked. Shop drawings submitted to the ENGINEER without the CONTRACTOR's stamp and signature will be returned to the CONTRACTOR for conformance with this requirement. Shop drawings shall indicate any deviations in the submittal from requirements of the Contract Documents. If the CONTRACTOR takes exception to the specifications, the CONTRACTOR shall note the exception in the letter of transmittal to the ENGINEER. Shop drawings submittals shall not be used as a vehicle for requesting approval of substitute or alternative equipment and materials. Substitution requests will be considered only when submitted in accordance with the applicable provisions of Section 01 60 00.

B. Determine and Verify:

1. Field measurements.

2. Field construction criteria.

3. Catalog numbers and similar data.

4. Conformance with Specifications.

C. The CONTRACTOR shall furnish the ENGINEER a schedule of Shop Drawings submittals fixing the respective dates for the submission of shop and working drawings, the beginning of manufacture, testing and installation of materials, supplies and equipment. This schedule shall indicate those that are critical to the progress schedule.

D. The CONTRACTOR shall not begin any of the work covered by a drawing, data, or a sample returned for correction until a revision or correction thereof has been reviewed and returned to him, by the ENGINEER, with approval.

E. The CONTRACTOR shall submit to the ENGINEER all drawings and schedules sufficiently in advance of construction requirements to provide no less than 30 calendar days for checking and appropriate action from the time the ENGINEER receives them.

Attachment: Holly Hill LS_13 Rehabilitation_Bid Set Specifications_04.30.19 (2019-R-38 : Lift Station #13 Rehabilitation)

F. All submittals shall be accompanied by a transmittal letter prepared in duplicate containing the following information:

1. Date.

2. Project Title and Number.

3. CONTRACTOR's name and address.

4. The number of each Shop Drawing, Product Data, and Sample submitted.

5. Notification of deviations from Contract Documents.

6. Submittal Log Number conforming to Specification Section Numbers.

G. The CONTRACTOR shall submit five (5) copies of descriptive or product data submittals/drawings to the ENGINEER. The ENGINEER will review the submittals/drawings and return to the CONTRACTOR the sets of marked-up submittals/drawings with appropriate review comments. All shop drawings, when practical, shall be 24 inch by 36 inch (24" x 36") in size.

H. Once submittals/drawings are approved, they are to be distributed as follows:

1. OWNER: One (1) copy.

2. ENGINEER: Two (2) copies.

3. CONTRACTOR: Two (2) copies.

I. The CONTRACTOR shall be responsible for and bear all costs of damages which may result from the ordering of any material or from proceeding with any part of work prior to the completion of the review by ENGINEER of the necessary shop drawings.

J. The CONTRACTOR shall be fully responsible for observing the need for and making any changes in the arrangement of piping, connections, wiring, manner of installation, etc., which may be required by the materials/equipment he proposed to supply both as pertaining to his own work and any work affected under other parts, headings, or divisions of Drawings and Specifications.

Attachment: Holly Hill LS_13 Rehabilitation_Bid Set Specifications_04.30.19 (2019-R-38 : Lift Station #13 Rehabilitation)

1.03. ENGINEER'S REVIEW OF SHOP DRAWINGS

A. The ENGINEER's review of drawings, data and samples submitted by the CONTRACTOR will cover only general conformity to the Specifications, external connections, and dimensions which affect the installation. The ENGINEER's review and exceptions, if any, will not constitute an approval of dimensions, quantities, and details of the material, equipment, device, or item shown.

B. The review of drawings and schedules will be general, and shall not be construed:

1. As permitting any departure from the Contract requirements;

2. As relieving the CONTRACTOR of responsibility of any errors, including details, dimensions, and materials;

3. As approving departures from details furnished by the ENGINEER, except as otherwise provided herein.

C. If the drawings or schedules as submitted describe variations and show a departure from the Contract requirements which ENGINEER finds to be in the interest of the OWNER and to be so minor as not to involve a change in Contract Price or time for performance, the ENGINEER may return the reviewed drawings, without noting an exception.

D. When reviewed by the ENGINEER, each of the Shop Drawings will be identified as having received such review, being so stamped and dated. Shop Drawings stamped "NOT APPROVED/RESUBMIT" and with required corrections shown will be returned to the CONTRACTOR for correction and re-submittal.

E. Re submittals will be handled in the same manner as first submittals. On Re submittals the CONTRACTOR shall direct specific attention, in writing or on resubmitted Shop Drawings, to revisions other than the corrections requested by the ENGINEER on previous submissions. The CONTRACTOR shall make any corrections required by the ENGINEER.

F. If the CONTRACTOR considers any correction indicated on the drawings to constitute a change to the Contract Drawings or Specifications, the CONTRACTOR shall give written notice thereof to the ENGINEER.

G. Shop drawings and submittal data shall be reviewed by the ENGINEER for each original submittal and first Re submittal; thereafter review time for subsequent Re submittals shall be charged to the CONTRACTOR in accordance with the terms of the ENGINEER's Agreement with the OWNER.

H. When the Shop Drawings have been completed to the satisfaction of the

Attachment: Holly Hill LS_13 Rehabilitation_Bid Set Specifications_04.30.19 (2019-R-38 : Lift Station #13 Rehabilitation)

ENGINEER, the CONTRACTOR shall carry out the construction in accordance therewith and shall make no further changes therein except upon written instructions from the ENGINEER.

I. No partial submittals will be reviewed. Submittals not complete will be returned to the CONTRACTOR for Re submittal. Unless otherwise specifically permitted by the ENGINEER, make all submittals in groups containing all associated items for:

1. Systems.

2. Processes.

3. As indicated in Specifications Sections. All drawings, schematics, manufacturer's product data, certifications and other shop drawing submittals required by a system specification shall be submitted at one time as a package to facilitate interface checking.

1.04 SHOP DRAWINGS

A. When used in the Contract Documents, the term "shop drawings" shall be considered to mean CONTRACTOR's plans for materials and equipment which become an integral part of the Project. These drawings shall be completed and detailed. Shop drawings shall consist of fabrication, erection and setting drawings and schedule drawings, manufacturer's scale drawing, and wiring and control diagrams. Cuts, catalogs, pamphlets, descriptive literature, and performance and test data, shall be considered only as supportive to required shop drawings as defined above. As used herein, the term "manufactured" applied to standard units usually mass-produced; and "fabricate" means items specifically assembled or made out of selected materials to meet individual design requirements.

B. Manufacturer's catalog sheets, brochures, diagrams, illustrations, and other standard descriptive data shall be clearly marked to identify pertinent materials, product, or models. Delete information which is not applicable to the Work by striking or cross-hatching.

C. Drawings and schedules shall be checked and coordinated with the work of all trades involved, before they are submitted for review by the ENGINEER and shall bear the CONTRACTOR's stamp of approval as evidence of such checking and coordination. Drawings or schedules submitted without this stamp of approval shall be returned to the CONTRACTOR for resubmission.

D. Each shop drawing shall have a blank area three and one-half inch x three and one-half inch (3-1/2" x 3-1/2"), located adjacent to the title block. The title block shall display the following:

Attachment: Holly Hill LS_13 Rehabilitation_Bid Set Specifications_04.30.19 (2019-R-38 : Lift Station #13 Rehabilitation)

1. Project title and number.
2. Name of project building or structure.
3. Number and title of the shop drawing.
4. Date of shop drawing or revision.
5. Name of CONTRACTOR and subcontractor submitting drawing.
6. Supplier/manufacturer.
7. Separate detailer when pertinent.
8. Specification title and number.
9. Specification section.
10. Drawing number.

E. If drawings show variations from Contract requirements because of standard shop practice or for other reasons, the CONTRACTOR shall describe such variations in his letter of transmittal. If acceptable, proper adjustment in the Contract shall be implemented where appropriate. If the CONTRACTOR fails to describe such variations, he shall not be relieved of the responsibility for executing the work in accordance with the Contract, even though such drawings have been reviewed.

F. Data on materials and equipment include, without limitation, materials and equipment lists, catalog data sheets, cuts, performance curves, diagrams, materials of construction and similar descriptive material. Materials and equipment lists shall give, for each item thereon, the name and location of the supplier or manufacturer, trade name, catalog reference, size, finish, and all other pertinent data.

G. For all mechanical and electrical equipment furnished, the CONTRACTOR shall provide a list including the equipment name, address, and telephone number of the manufacturer's representative and service company so that service and/or spare parts can be readily obtained.

H. All manufacturers or equipment suppliers who are proposed to furnish equipment or products shall submit an installation list to the ENGINEER along with the required shop drawings. The installation list shall include at least five (5) installations where identical equipment has been installed and has been in operation for a period of at least one (1) year.

I. Only the ENGINEER will utilize the color "red" in marking shop drawing submittals.

Attachment: Holly Hill LS_13 Rehabilitation_Bid Set Specifications_04.30.19 (2019-R-38 : Lift Station #13 Rehabilitation)

1.05 WORKING DRAWINGS

A. When used in the Contract Documents, the term "working drawings" shall be considered to mean the CONTRACTOR's plan for temporary structures such as temporary bulkheads, support of open cut excavation, support of utilities, ground water control systems, forming and false work; for underpinning; and for such other work as may be required for construction but does not become an integral part of the project.

B. Copies of working drawings as noted in paragraph 1.05 A. above, shall be submitted to the ENGINEER where required by the Contract Documents or requested by the ENGINEER, and shall be submitted at least 30 calendar days (unless otherwise specified by the ENGINEER) in advance of their being required for work.

C. Working drawings shall be signed by a registered Professional Engineer, currently licensed to practice in the State of Florida and shall convey, or be accompanied by, calculation or other sufficient information to completely explain the structure, machine, or system described and its intended manner of use. Review of working drawings by the ENGINEER will not relieve the CONTRACTOR in any way from his responsibility with regard to the fulfillment of the terms of the Contract. All risks of error are assumed by the CONTRACTOR; the OWNER and ENGINEER shall have no responsibility therefore.

1.06 SAMPLES

A. The CONTRACTOR shall furnish, for the approval of the ENGINEER, samples required by the Contract Documents or requested by the ENGINEER. Samples shall be delivered to the ENGINEER as specified or directed. The CONTRACTOR shall prepay all shipping charges on samples. Materials or equipment for which samples are required shall not be used in work until approved by the ENGINEER.

B. Samples shall be of sufficient size and quantity to clearly illustrate:

1. Functional characteristics of the product, with integrally related parts and attachment devices.

2. Full range of color, texture and pattern.

3. A minimum of two (2) samples of each item shall be submitted.

C. Each sample shall have a label indicating:

1. Name of project.

2. Name of CONTRACTOR and subcontractor.

Attachment: Holly Hill LS_13 Rehabilitation_Bid Set Specifications_04.30.19 (2019-R-38 : Lift Station #13 Rehabilitation)

3. Material or equipment represented.

4. Place of origin.

5. Name of producer and brand (if any).

6. Location in project.

7. Submittal Number.

(Samples of finished materials shall have additional marking that will identify them under the finish schedules).

D. The CONTRACTOR shall prepare a transmittal letter in triplicate for each shipment of samples containing the information required in paragraph 1.06 B. above. He shall enclose a copy of this letter with the shipment and send a copy of this letter to the ENGINEER. Approval of a sample shall be only for the characteristics or use names in such approval and shall not be construed to change or modify any Contract requirements.

E. Approved samples not destroyed in testing shall be sent to the ENGINEER or stored at the site of work. Approved samples of the hardware in good condition will be marked for identification and may be used in the work. Materials and equipment incorporated in work shall match the approved samples. Samples which failed testing or were not approved will be returned to the CONTRACTOR at his expense, if so requested at time of submission.

PART 2 – PRODUCTS (NOT USED)

PART 3 – EXECUTION (NOT USED)

END OF SECTION

Attachment: Holly Hill LS_13 Rehabilitation_Bid Set Specifications_04.30.19 (2019-R-38 : Lift Station #13 Rehabilitation)

SECTION 01 35 00

LOCATION, SCOPE, AND SPECIAL REQUIREMENTS

PART 1 – GENERAL

1.01 The CONTRACTOR shall not have any right in property in any materials taken from any excavation and he shall not remove any earth, sand, or other material from the lines of the work before the excavation is refilled except upon direction of the ENGINEER. The provisions of this paragraph shall not be construed as relieving the CONTRACTOR of any kind of his obligations to remove and dispose of any of the material excavated, with or without rehandling, at his cost and expense as provided in these specifications.

1.02 From investigations, including surveys made at the site, it is assumed that physical conditions are approximately as indicated on the drawings, but the nature of the materials below the surface, the depth to satisfactory foundations, or the stability of beds or banks or quantity of groundwater are not guaranteed.

1.03 Where reference is made within these documents to government specifications, or those of well known organizations such as ASTM, ASA, ASME, etc., the latest editions shall be used, any or all references in these documents to earlier stated editions notwithstanding.

1.04 The CONTRACTOR shall take all necessary precautions to prevent damage to existing City utilities which are to remain in service during any of his construction operations. Should such utilities be damaged by the CONTRACTOR, he shall be required to replace, or repair same, to the satisfaction of the ENGINEER, at no additional cost to the OWNER.

1.05 Certain information regarding the reputed presence, size, character, and location of existing underground structure, pipes and conduits has been shown on the contract drawings. The location of underground structures shown may be inaccurate, and other obstructions than those shown may be encountered. The CONTRACTOR distinctly agrees that the ENGINEER and the OWNER are not responsible for the correctness or sufficiency of the information given; that in no event is this information to be considered as a part of the Contract; that he shall have no claim for delay or extra compensation on account of incorrectness of information given; or on account of insufficiency or absence of information regarding obstructions either revealed or not revealed by the drawings; and that he shall have no claim for relief from any obligation or responsibility under this Contract, in case the location, size or character of any pipe or other underground structure is encountered that is not shown on the drawings.

1.06 The CONTRACTOR agrees that the work shall be started not later than the date indicated in the "Notice to Proceed" and shall substantially complete all work within **150 calendar days**, with final completion within **30 days** of substantial completion.

Attachment: Holly Hill LS_13 Rehabilitation_Bid Set Specifications_04.30.19 (2019-R-38 : Lift Station #13 Rehabilitation)

A. The CONTRACTOR further agrees that for each calendar day, with the exception of Sundays and legal holidays, that any such work shall remain uncompleted after the completion time stipulated above, the sum of **One Thousand Dollars ($1,000)** per day shall be deducted by the OWNER from monies due the CONTRACTOR, not as a penalty but as liquidated damages. If the CONTRACTOR is declared in default in accordance with the provisions of the specifications, liquidated damages shall be charged as provided herein, and such amounts shall be deducted from the final amount payable to the CONTRACTOR or his Surety. Should the total amount chargeable as liquidated damages exceed the amount due or payable to the CONTRACTOR or his Surety, then such excess shall be paid to the OWNER by the CONTRACTOR or his Surety.

1.07 The City shall provide reference points as shown on the plans. CONTRACTOR shall be responsible for having a land surveyor registered in the State of Florida and approved by the ENGINEER lay out the work, shall protect and preserve the established reference points and shall make no changes or relocations without the prior written approval of the ENGINEER. CONTRACTOR shall report to ENGINEER whenever such reference point is lost or destroyed or required location because of necessary changes in grades or locations, and the CONTRACTOR shall be responsible for replacement or relocation of such reference points by professionally qualified personnel, registered in the State of Florida and approved by the ENGINEER.

1.08 At least 30 days prior to the first progress payment request, the CONTRACTOR shall submit to the OWNER a schedule of anticipated draws, which estimates as accurately as possible the amount of the anticipated "work in place" which will be completed each month. Failure to comply may result in delay in payment, as funds from several sources customarily serve as the project funding source.

1.09 All dewatering and pumping necessary to accomplish the work of this Contract shall be performed by the CONTRACTOR at no extra or additional cost to the OWNER. Any permits required shall be the responsibility of the CONTRACTOR.

1.10 Examination of Contract Documents and Site. Before submitting a Bid, each CONTRACTOR must (a) examine the Contract Documents thoroughly, (b) visit the site to familiarize himself with local conditions that may in any manner affect cost, progress, or performance of the work, (c) familiarize himself with federal, state and local laws, ordinance, rules, and regulations that may in any manner affect cost, progress or performance of the work, and (d) study and carefully correlate Bidder's observations with the Contract Documents.

1.11 Attention is directed to the requirements of the following agencies with regard to permits and construction requirements within their jurisdiction.

A. City of Holly Hill

B. Army Corps of Engineers.

Attachment: Holly Hill LS_13 Rehabilitation_Bid Set Specifications_04.30.19 (2019-R-38 : Lift Station #13 Rehabilitation)

C. St Johns River Water Management District.

D. Department of Environmental Protection.

E. The OWNER will make necessary application for permits or permit exemptions to construct such facilities. It shall be, however, the responsibility of the CONTRACTOR to construct the facilities in strict accordance with the requirements of the above-mentioned agencies, and no extra or additional payments will be made by the OWNER for this work.

1.12 Construction shall be limited to weekday "day light" working hours. No "weekend", "night time", or "holiday" work shall be performed without obtaining permission in advance from the Project Engineer. Certain non-essential items such as clean up, seeding and mulching, sodding, some well pointing operations, saw cutting of pavement, etc. may be performed by the CONTRACTOR during the above times by giving the Project Engineer "Advance Notice" of such operations. The Prime CONTRACTOR shall establish the "normal (40 hour)" work week and all subcontractors shall work only during this "normal (40 hour)" work week to allow the Project Engineer's Representative to observe the contract work during this "normal (40 hour)" work week. Any weekend, nighttime, or holiday work permitted to be performed by the CONTRACTOR shall be by agreement of both the ENGINEER and the City. Such work shall be performed in the presence of the ENGINEER's Project Representative, paid for and scheduled at least 48 hours in advance of the activity planned. The fee shall be $500 per inspector per day or any portion thereof, paid in advance directly to the ENGINEER. The fee shall only cover the activities the ENGINEER can reasonably inspect with one person. The ENGINEER solely reserves the right to determine the number of inspectors required for the number of CONTRACTOR's crews working outside of the normal 40-hour work week.

1.13 The CONTRACTOR is responsible for recording a copy of the Payment and Performance Bond in the Official Records of Volusia County, Florida and shall provide copies of the recorded documents to the ENGINEER prior to the issuance of the "Notice to Proceed". The CONTRACTOR shall be responsible for paying all costs associated with the recording of these documents and no contract payment shall be made to the CONTRACTOR for this item.

1.14 The CONTRACTOR acknowledges that he is responsible for complying with all aspects of the Florida Trench Safety Act (90-96, Laws of Fla.) effective October 1, 1990. He assumes all responsibility and costs entailed.

1.15 The proposed work indicated on the project plans may require adjustment in the field due to conflicts or field conditions. Field changes which do not substantially alter the character of the work shall not be grounds for the issuance of the change order.

Attachment: Holly Hill LS_13 Rehabilitation_Bid Set Specifications_04.30.19 (2019-R-38 : Lift Station #13 Rehabilitation)

1.16 Construction materials may be stockpiled. All arrangements and costs incurred are the responsibility of the CONTRACTOR. Prior to making arrangements with individual property owners, the CONTRACTOR shall indicate to the City and the ENGINEER which sites have been targeted for material storage. The City reserves the right to approve or disapprove the proposed locations. The CONTRACTOR shall provide a notarized written letter from the property owner approving use of the property by the property owner prior to using the property.

1.17 The CONTRACTOR is responsible for obtaining a Water Management District Permit for (dewatering) consumptive use if the CONTRACTOR's "means or methods" trip the Agency's thresholds requiring permits. No separate payment or contract time extension for the CONTRACTOR obtaining the permit shall be granted by the City.

1.18 Land disturbed shall have hay bales or "turbidity curtains" installed around the perimeter to control erosion and sediment runoff where it is likely to occur during construction at no extra cost to the OWNER.

1.19 All contract unit pricing shall remain valid for the duration of the contract.

1.20 Florida Sales Tax on materials, as well as all other customary taxes on construction activities, shall be paid for by the CONTRACTOR at no additional expense to the OWNER.

1.21 Limitations on the ENGINEER's Responsibilities:

A. Neither the ENGINEER's authority to act under this Paragraph nor any decision made by him in good faith either to exercise or not exercise such authority shall give rise to any duty or responsibility of the ENGINEER to the CONTRACTOR, any Subcontractor, any of their agents or employees or any other person performing any of the work.

B. The ENGINEER will <u>not</u> be responsible for the construction means, methods, techniques, sequences or procedures, or the safety precautions and programs incident thereto, and he will <u>not</u> be responsible for the CONTRACTOR's failure to perform the work in accordance with the Contract Documents.

C. The ENGINEER will <u>not</u> be responsible for the acts or omissions of the CONTRACTOR, any subcontractors, or any of his or their agents or employees, or any other persons performing any of the work.

1.22 Reasonable care shall be taken during construction to avoid damage to vegetation. Ornamental shrubbery and tree branches shall be temporarily tied back, where appropriate, to minimize damage. Trees which receive damage to branches shall be trimmed of those branches to improve the appearance of the tree. Tree trunks receiving damage from equipment shall be treated with a tree dressing.

Attachment: Holly Hill LS_13 Rehabilitation_Bid Set Specifications_04.30.19 (2019-R-38 : Lift Station #13 Rehabilitation)

1.23 Substantial completion is defined as materials in place tested and in use, sodding, and sidewalk and other restoration items complete.

1.24 The CONTRACTOR's forces shall be required to "hand dig" and expose all existing public/private utilities and other existing facilities which may be in conflict with the proposed construction in order to adjust the proposed facility alignments to avoid any conflicts.

1.25 All existing improved areas disturbed by construction shall be sodded with the same type sod as the existing variety of sod encountered. Payment will be made for this work under the appropriate lump sum pay item. No separate payment will be made for sodding.

1.26 The CONTRACTOR shall make his own provisions for materials security. Any City provided work areas shall be returned to its original or better condition upon the completion of the project. Sodding of any disturbed areas utilized by the CONTRACTOR for work area will be accomplished by the CONTRACTOR at no additional cost to the City. Separate payment for this work will not be made and shall be included in the appropriate contract work items by the CONTRACTOR in the bid proposal.

1.27 The OWNER shall provide copies of previous surveys for the CONTRACTOR's surveyor's use. The CONTRACTOR shall bear all costs for a registered professional surveyor to "layout" the proposed project. At project completion time, the CONTRACTOR shall bear the costs of setting property corners which were lost during construction if they were disturbed by the CONTRACTOR's construction operation.

1.28 The Contract shall perform on the site and with his own organization work equivalent to not less than 50 percent (50%) of the total dollar value of the work to be performed under this contract. The exception is specialty work may be performed by subcontractors and the cost of any such specialty work so performed by subcontract may be deducted from the total contract amount before computing the amount of work required to be performed by the CONTRACTOR with his own organization.

1.29 The CONTRACTOR shall be responsible for dust control on the project. The CONTRACTOR shall control dust when conditions as determined by the ENGINEER warrant. Water shall be provided by the City for this use in accordance with Paragraph 1.30 of this section. No separate payment shall be made for this item.

1.30 The CONTRACTOR and/or subcontractor shall not work on City's holidays. City Utility personnel are not available for emergency repairs nor are construction representatives on these holidays.

1.31 No construction trailer shall be required for this project.

1.32 All construction, manufacturing, fabrication and testing of materials shall be performed under the guidelines set forth in applicable local, state and federal codes, and/or under

Attachment: Holly Hill LS_13 Rehabilitation_Bid Set Specifications_04.30.19 (2019-R-38 : Lift Station #13 Rehabilitation)

recommendations provided in technical publications of respected professional or industry organizations. Material testing programs, where applicable, shall be presented to the ENGINEER for review and approval prior to construction. All products constructed or manufactured/supplied for the project shall be accompanied by industry acceptable warranties or guarantees.

1.33 For the purpose of these specifications. "Project Completion" is defined as completion of an agreed upon list of punch-list items compiled in a planned project walkthrough held at a time the CONTRACTOR considers the project to be "Substantially Complete". The CONTRACTOR shall notify the OWNER and ENGINEER at least 48 hours in advance of substantial completion and schedule a mutually agreeable walkthrough.

1.34 The CONTRACTOR shall maintain a clean and neat site, void of loose debris, trash, remnant parts or materials. Trash receptacles and removal service shall be maintained by the CONTRACTOR specifically for this project. Existing facilities shall not be used to maintain the project. Temporary debris piles shall be limited in number as much as practical and contained in designated areas until removal. Debris and trash shall not be scattered in areas outside the limited designated areas at anytime.

Removal of debris/trash shall be scheduled as appropriate to not allow piles to reach five feet in height or greater than ten feet in diameter. Debris individually larger than these dimensions shall be removed from the site within five working days. Receptacles shall not be allowed to overflow at any time. Where necessary, the CONTRACTOR shall employ a Maintenance of Traffic Plan (MOTP) for vehicles and pedestrians. The plan must be in writing, including sketches or drawings, and must be submitted to the OWNER, OWNER's Representative or ENGINEER for review and approval before commencement of the plan. The CONTRACTOR shall follow all applicable local, state and federal codes regarding site safety and maintenance.

END OF SECTION

Attachment: Holly Hill LS_13 Rehabilitation_Bid Set Specifications_04.30.19 (2019-R-38 : Lift Station #13 Rehabilitation)

SECTION 01 35 01

ATTACHMENTS

PART 1 – GENERAL

1.01 DESCRIPTION

A. The following attachments are hereby made part of the project specifications as fully and completely as if the same were fully set forth herein:

1. DEP Wastewater Construction Permit
2. CDBG Documents

Attachment: Holly Hill LS_13 Rehabilitation_Bid Set Specifications_04.30.19 (2019-R-38 : Lift Station #13 Rehabilitation)

SUPPLEMENTAL CONDITIONS FOR FEDERALLY ASSISTED PROJECTS

The supplemental conditions contained in this section are intended to cooperate with, to supplement, and to modify the general conditions and other specifications. In case of disagreement with any other section of this contract, the Supplemental Conditions shall govern. This contract is funded in whole or in part with federal funds made available from the U.S. Department of Housing and Urban Development (HUD). The contractor and all of its subcontractors shall comply with these federal provisions. The contractor shall include these supplemental conditions in all subcontracts.

1. Davis-Bacon Act
2. Copeland "Anti-Kick Back" Act
3. Federal Labor Standards
4. Environmental Compliance
5. Lead Based Paint Requirements
6. Historic Preservation
7. Energy Efficiency
8. Flood Disaster Protection
9. Special Equal Opportunity Provisions
10. Section 3
11. Conflict of Interest
12. Utilization of Minority and Women-owned Businesses
13. Fair Housing Laws
14. Drug Free Workplace
15. Debarred Contractors
16. Lobbying
17. Access to Records
18. Records Retention
Attachment I - Federal Labor Standards Provisions
Attachment II - Section 3 Clause

1. Davis- Bacon Act- 29 CFR Parts 1,3,5,6 and 7

The contractor agrees to comply with the requirements of the Davis-Bacon Act, which requires the payment of prevailing wage rates (which are determined by the U.S. Department of Labor) to all laborers and mechanics on federally funded construction projects in excess of $2,000. A Davis-Bacon wage decision (or wage determination) is a listing of various construction work classifications and the minimum wage rates (and fringe benefits, where prevailing) that workers who perform work in those classifications must be paid.

2. Copeland "Anti-Kickback" Act- 18 USC 874 and 40 USC 276c; 29 CFR Part 3

The contractor and subcontractor(s) shall comply with the requirements of the Copeland "Anti-Kickback" Act as supplemented in the U.S. Department of Labor regulations 29 CFR Part 3. The Copeland Act makes it a federal crime for anyone to require any laborer or mechanic (employed on a federally assisted project) to kickback (i.e. give up or pay back) any part of their wages. The Copeland Act requires every contractor and subcontractor to submit weekly payroll reports (certified payroll) and regulates permissible payroll deductions.

Attachment: Holly Hill LS_13 Rehabilitation_Bid Set Specifications_04.30.19 (2019-R-38 : Lift Station #13 Rehabilitation)

3. Federal Labor Standards

The project or program to which the construction work covered by this contract pertains is a federally assisted project and the Federal Labor Standards Provisions are included in this contract pursuant to the provisions applicable to such Federal assistance. See Attachment 1 for a complete copy of these labor standards.

4. Environmental Compliance- Section 306 of the Clean Air Act, Section 508 of the Clean Water Act and EPA Regulations- 42 U.S.C. 1857(h)

The contractor shall comply with the requirements of the Federal Clean Air Act and the Federal Water Pollution Control Act, as amended. Requirements for compliance with these regulations apply to contracts and subcontracts in amounts in excess of $100,000. all applicable standards, orders, or requirements issued under (), (33 U.S.C. 1368), Executive Order 11738, and U.S. Environmental Protection Agency regulations (40 C.F.R. Part 15).

5. Lead- Based Paint Requirements- 24 CFR Part 35

All housing that is assisted by the contractor through this project with federal funds is subject to the lead-based paint requirements, found at 24 CFR Part 35. These rules apply to properties that were constructed prior to 1978, and require:

- Certain disclosures (in the form of notices) to occupants and applicants about any known or potential lead-based paint hazards
- Testing, assessing, and stabilization or reduction of lead-based paint hazards in accordance with established procedures, based on activity type and level of Federal assistance (for rehabilitation)
- Use of safe work practices
- Certain provisions included in all contracts and subcontracts related to lead-based paint
- Ongoing maintenance to monitor controls put in place to limit the hazards associated with the presence of lead-based paint.

6. Historic Preservation- 16 USC 470; 36 CFR Part 800

The contractor's performance may be subject to the Historic Preservation requirements set forth in the National Historic Preservation Act of 1966, as amended (16 U.S.C. 470) and the procedures set forth in 36 CFR Part 800, Advisory Council on Historic Preservation Procedures for Protection of Historic Properties.

7. Energy Efficiency

The contractor shall comply with any mandatory standards and policies relating to energy efficiency, which are contained in the state energy conservation plan issued in compliance with the Energy Policy and Conservation Act (Public Law 94-163).

Attachment: Holly Hill LS_13 Rehabilitation_Bid Set Specifications_04.30.19 (2019-R-38 : Lift Station #13 Rehabilitation)

8. Flood Disaster Protection- 42 USC 4001

The contractor's performance may be subject to the Flood Disaster Protection Act of 1973 which requires that activities located in an area identified by the Federal Emergency Management Agency (FEMA) as having special flood hazards, flood insurance under the National Flood Insurance Program must be obtained and maintained as a condition of financial assistance for acquisition or construction purposes (including housing rehabilitation.)

9. Special Equal Opportunity Provisions

A. Activities and Contracts Not Subject to Executive Order 11246, as Amended

(Applicable to Federally assisted construction contracts and related subcontracts $10,000 and under.)

During the performance of this contract, the Contractor agrees as follows:

i. The Contractor shall not discriminate against any employee or applicant for employment because of race, color, religion, sex, or national origin. The Contractor shall take affirmative action to ensure that applicants for employment are employed, and that employees are treated during employment, without regard to their race, color, religion, sex, or national origin. Such action shall include, but not be limited to, the following: employment, upgrading, demotion, or transfer; recruitment or recruitment advertising; layoff or termination; rates of pay or other forms of compensation; and selection for training, including apprenticeship.

ii. The Contractor shall post in conspicuous places, available to employees and applicants for employment, notices to be provided by Contracting Officer seeking forth the provisions of this nondiscrimination clause. The Contractor shall state that all qualified applicants be considered without regard to race, color, religion, sex or national origin.

iii. Contractors shall incorporate foregoing requirements in all subcontracts.

B. Executive Order 11246 (contracts/subcontracts above $10,000)

During the performance of this contract, the contractor agrees as follows:

i. Section 202 Equal Opportunity Clause

a. The Contractor will not discriminate against any employee or applicant for employment because of race, color, religion, sex, or national origin. The Contractor will take affirmative action to ensure that applicants are employed, and that employees are

Attachment: Holly Hill LS_13 Rehabilitation_Bid Set Specifications_04.30.19 (2019-R-38 : Lift Station #13 Rehabilitation)

treated during employment, without regard to their race, color, religion, sex, or national origin. Such action shall include, but not be limited to, the following: employment, upgrading, demotion, or transfer; recruitment, or recruitment advertising; layoff or termination, rates of pay or other forms of compensation; and selection for training, including apprenticeship. The Contractor agrees to post in a conspicuous place, available to employees and applicants for employment, notices to be provided setting forth the provisions of this nondiscrimination clause.

b. The Contractor will, in all solicitations or advertisements for employees placed by or on behalf of the Contractor, state that all qualified applicants will receive consideration without regard to race, color, religion, sex, or national origin.

c. The Contractor will send to each labor union or representative of workers with which he has a collective bargaining agreement or other contract or understanding a notice to be provided by the Contract Compliance Officer advising the said labor union or workers representatives of the Contractors commitment under this section, and shall post copies of the notice in conspicuous places available to employees and applicants for employment.

d. The Contractor will comply with all provisions of Executive Order 11246 of September 24, 1965, and of the Rules, Regulations, and Relevant Orders of the Secretary of Labor.

e. The Contractor will furnish all information and reports required by Executive Order 11246 of September 24, 1965, and by rules, regulations, and orders of the Secretary of Labor, or pursuant thereto, and will permit access to his books, records, and accounts by the Department and the Secretary of Labor for purposes of investigation to ascertain compliance with such rules, regulations, and others.

C. Certification of Non-segregated Facilities- E.O. 11246; 41 CFR Part 60-1.8

By the submission of this bid, the bidder, offeror, applicant or subcontractor certifies that he/she does not maintain or provide for his/her employees any segregated facility at any of his/her establishments, and that he/she does not permit employees to perform their services at any location, under his/her control, where segregated facilities are maintained. He/She certifies further that he/she will not maintain or provide for employees any segregated facilities at any of his/her establishments, and he/she will not permit employees to perform their services at any location under his/her control where segregated facilities are maintained. The bidder, offeror, applicant or subcontractor agrees that a breach of this certification is violation of the Equal Opportunity Clause of this contract. As used in this certification, the term segregated facilities means any waiting rooms, work eating areas, time clocks, locker rooms, and other storage or dressing areas, transportation and housing facilities provided for employees

Attachment: Holly Hill LS_13 Rehabilitation_Bid Set Specifications_04.30.19 (2019-R-38 : Lift Station #13 Rehabilitation)

which are in fact segregated on the basis of race, color, religion, or otherwise. He/She further agrees that (except where he/she has obtained identical certifications from proposed subcontractors prior to the award of subcontractors have submitted identical certifications for specific time periods).

D. Equal Employment Opportunity- Title VII of the Civil Rights Act of 1964 E.O. 11246

Under Title VI of the Civil Rights Act of 1964, no person shall, on the grounds of race, color, or national origin, be excluded from participation in, be denied the benefits of, or be subjected to discrimination under any program or activity receiving Federal financial assistance.

E. Americans with Disabilities Act of 1990- E.O. 11250; 42 U.S.C 12131; 24 CFR Part 35

The contractor shall not exclude on the basis of handicap persons from participation in, be denied the benefits of, or be subjected to discrimination under any program or activity receiving Federal financial assistance.

F. Section 109 of the Housing and Community Development Act of 1974

No person in the United States shall on the grounds of race, color, national original, or sex is excluded from participation in, be denied the benefits of, or be subjected to discrimination under any program or activity funded in whole or in part with funds made available under this title.

G. Section 504 of the Rehabilitation Act of 1973- 29 USC 794, 24 CFR Parts 8 and 9

i. The Contractor will not discriminate against any employee or applicant for employment because of physical or mental handicap in regard to any position for which the employee or applicant for employment is qualified. The Contractor agrees to take affirmative action to employ, advance in employment and otherwise treat qualified handicapped individuals without discrimination based upon their physical or mental handicap in all employment practices such as the following: employment, upgrading, demotion or transfer, recruitment, advertising, layoff or termination, rates of pay or other forms of compensation, and selection for training, including apprenticeship.

ii. The Contractor agrees to comply with the rules, regulations and relevant orders of the Secretary of Labor issued pursuant to the Act.

iii. In the event of the Contractors noncompliance with the requirements of this clause, actions for noncompliance may be taken in accordance with the rules, regulations, and relevant orders of the Secretary of Labor issued pursuant to the Act.

iv. The Contractor agrees to post in conspicuous places, available to employees and applicants for employment, notices in a form to be

Attachment: Holly Hill LS_13 Rehabilitation_Bid Set Specifications_04.30.19 (2019-R-38 : Lift Station #13 Rehabilitation)

prescribed by the Director, provided by or through the contracting officer. Such notices shall state the Contractors obligation under the law to take affirmative action to employ and advance in employment qualified handicapped employees and applicants for employment, and the rights of applicants and employees.

v. The Contractor will notify each labor union or representative of workers with which it has a collective bargaining agreement or their contract understanding, that the contractor is bound by the terms of Section 503 of the Rehabilitation Act of 1973, and is committed to take affirmative action to employ and advance in employment physically and mentally handicapped individuals.

vi. The Contractor will include the provisions of this clause in every subcontract or purchase order of $2,500 or more unless exempted by rules, regulations, or orders of the Secretary issued pursuant to Section 503 of the Act, so that such provisions will be binding upon each subcontractor or vendor. The Contractor will take such action with respect to any subcontract or purchase order as the Director of the Office of Federal Contract Compliance Programs may direct to enforce such provisions, including action for noncompliance.

H. Age Discrimination Act of 1975- 42 U.S.C. 6101, et seq; 24 CFR Part 146

The contractor shall comply with the Age Discrimination Act of 1975, which provides that no person, on the basis of age be excluded from participation in, be denied the benefits of, or be subjected to discrimination under, any program, or activity receiving Federal Financial assistance.

I. NSP 3 Vicinity Hiring and Contracting Preference-

A contractor that is awarded a project involving the use of NSP3 funds, as provided by the Dodd-Frank "Wall Street Reform and Consumer Protection Act" of January 5, 2010, sec 1497 (a)(8), is required to take actions to hire employees who reside in the vicinity of NSP3-funded projects, and provide contracting opportunities to small businesses that are owned and operated by residents in this vicinity.

10. Section 3- 24 CFR Part 135

The contractor shall comply with the purposes of the Section 3 of the Housing and Urban Development Act of 1968 (12 U.S.C. 1701U) (Section 3) and ensure that employment and other economic opportunities generated by HUD funded programs, to the greatest extent feasible, and consistent with Federal, State, and local laws and regulations, be directed to low- and very-low income persons, particularly those who are recipients of government assistance for housing, and to business concerns which provide economic opportunities to low and very low-income persons. Section 3 regulations apply to all contractors and subcontractors awarded contracts for HUD assisted projects which are in excess of $100,000. **Section 3 requires that the Section 3 Clause (See Attachment II) be included in every contract that involves section 3 projects.**

Attachment: Holly Hill LS_13 Rehabilitation_Bid Set Specifications_04.30.19 (2019-R-38 : Lift Station #13 Rehabilitation)

11. Conflict Of Interest- 24 CFR Part 85.36 and 24 CFR Part 570.611

No officer or employee of the local jurisdiction or its designees or agents, no member of the governing body, and no other public official of the locality who exercises any function or responsibility with respect to this contract, during his/her tenure or for one year thereafter, shall have any interest, direct or indirect, in any contract or subcontract, or the proceeds thereof, for work to be performed. Further, the Contractor shall cause to be incorporated in all subcontracts the language set forth in this paragraph prohibiting conflict of interest.

12. Utilization Of Minority And Women Firms (M/WBE)- 24 CFR Part 85 (e)

The contractor shall take affirmative steps to assure that M/WBE firms are utilized when possible as suppliers and/or subcontractors, as applicable.

Prior to contract award, the contractor shall document efforts to utilize M/WBE firms, including identifying what firms were solicited as suppliers and/or subcontractors, as applicable. Information regarding certified M/WBE firms can be obtained from:

- State of Florida at 904-487-4698 (all goods and services)
- State of Florida at 904-921-7370 (construction services, particularly highway)
- Minority Business Development Center in most major cities
- Local government M/WBE programs in many large counties and cities

13. Fair Housing Laws

The contractor shall company with the Fair Housing Act, and related laws that prohibit discrimination on the basis of race, color, national origin, religion, sex, familial status and handicap in the provision of housing, including rental, purchase, advertising, financing, insurance and multi-family housing on the basis of race, color, national origin, religion, sex, familial status and handicap. The requirements of the Fair Housing Act (42 U.S.C. 3601-20) and implementing regulations at 24 CFR part 100; Executive Order 11063, as amended by Executive Order 12259 (3 CFR, 1958-1063 Comp., p. 652 and 3 CFR, 1980 Comp., p. 307) (Equal Opportunity in Housing) and implementing regulations at 24 CFR part 107; and title VI of the Civil Rights Act of 1964 (42 U.S.C. 2000d) (Nondiscrimination in Federally Assisted Programs) and implementing regulations issued at 24 CFR part 1 shall apply to any housing related contract awarded hereunder.

14. Drug Free Workplace- 41 USC 701, 24 CFR Part 21

The Contractor shall comply with the requirements of the Drug-Free Workplace Act of 1988. The Contractor certifies to comply with the drug-free workplace requirements in accordance with the Act, and with U.S. Department of Housing and Urban Development regulations.

Attachment: Holly Hill LS_13 Rehabilitation_Bid Set Specifications_04.30.19 (2019-R-38 : Lift Station #13 Rehabilitation)

15. Debarred Contractors

This project is subject to requirements prohibiting use of federal funds to directly or indirectly employ, award contracts to, or otherwise engage the services of any contractor, subcontractor or subrecipient during any period of federal debarment, suspension, or placement of ineligibility status. The County is required to check the eligibility status of all contractors, subcontractors, and subrecipients against the federal publication that lists debarred and ineligible contractors. This list can be found on the The System for Award Management (SAM) at https://www.sam.gov

16. Lobbying

The Contractor certifies, to the best of his or her knowledge and belief, that:

A. No federally appropriated funds have been paid or will be paid, by or on behalf of the Contractor, to any person for influencing or attempting to influence an officer or employee of any agency, a Member of Congress, an officer or employee of Congress, or an employee of a Member of Congress in connection with the awarding of any federal loan, the entering into of any cooperative agreement, or the extension, continuation, renewal, amendment, or modification of any federal contract, grant, loan or cooperative agreement.

B. If any funds other than federally appropriated funds have been paid or will be paid to any person for influencing or attempting to influence an officer or employee of any agency, a Member of Congress, an officer or employee of Congress, or an employee of a Member of Congress in connection with this federal contract, grant, loan, or cooperative agreement, the undersigned shall complete and submit Standard Form-LLL, "Disclosure Form to Report Lobbying," in accordance with its instructions.

C. The Contractor shall require that the language of this certification be included in the award documents for all sub-awards at all tiers including subcontracts, sub-grants, and contracts under grants, loans, and cooperative agreements.

D. This certification is a material representation of fact upon which reliance was placed when this contract was made or entered into. Agreement to this certification is a prerequisite for making or entering into this contract imposed by Section 1352, title 31, U.S. Code. Any person or agency that makes an expenditure prohibited by this section is subject to a civil penalty from $10,000 up to $100,000 for each failure. This penalty also applies to any person or agency that fails to submit or amend the disclosure form (LLL), when required. Failure to submit the required certification may result in payment under this contract being delayed or denied.

Attachment: Holly Hill LS_13 Rehabilitation_Bid Set Specifications_04.30.19 (2019-R-38 : Lift Station #13 Rehabilitation)

17. Access to Records- 24 CFR Part 85.42 (e) & (f)

The contractor shall give access to all records, pertinent books, documents, papers or other records related to this contract to the awarding agency, the County of Volusia, the U.S. Department of Housing and Urban Development, the Comptroller General of the United States, and any of their duly authorized representatives for the purpose of making audit, examination, excerpts, and transcriptions as needed.

18. Records Retention- 24 CFR Part 85.42 (a)-(d)

The contractor shall comply with the CDBG records retention regulations. Financial, program, supporting, and other records pertinent to this contract and the grant program shall be maintained for five years after the local government makes final payment and all other pending matters are closed.

Federal Labor Standards Provisions

U.S. Department of Housing and Urban Development
Office of Labor Relations

Applicability

The Project or Program to which the construction work covered by this contract pertains is being assisted by the United States of America and the following Federal Labor Standards Provisions are included in this Contract pursuant to the provisions applicable to such Federal assistance.

A. 1. (i) Minimum Wages. All laborers and mechanics employed or working upon the site of the work, will be paid unconditionally and not less often than once a week, and without subsequent deduction or rebate on any account (except such payroll deductions as are permitted by regulations issued by the Secretary of Labor under the Copeland Act (29 CFR Part 3), the full amount of wages and bona fide fringe benefits (or cash equivalents thereof) due at time of payment computed at rates not less than those contained in the wage determination of the Secretary of Labor which is attached hereto and made a part hereof, regardless of any contractual relationship which may be alleged to exist between the contractor and such laborers and mechanics. Contributions made or costs reasonably anticipated for bona fide fringe benefits under Section l(b)(2) of the Davis-Bacon Act on behalf of laborers or mechanics are considered wages paid to such laborers or mechanics, subject to the provisions of 29 CFR 5.5(a)(1)(iv); also, regular contributions made or costs incurred for more than a weekly period (but not less often than quarterly) under plans, funds, or programs, which cover the particular weekly period, are deemed to be constructively made or incurred during such weekly period.

Such laborers and mechanics shall be paid the appropriate wage rate and fringe benefits on the wage determination for the classification of work actually performed, without regard to skill, except as provided in 29 CFR 5.5(a)(4). Laborers or mechanics performing work in more than one classification may be compensated at the rate specified for each classification for the time actually worked therein: Provided, That the employer's payroll records accurately set forth the time spent in each classification in which work is performed. The wage determination (including any additional classification and wage rates conformed under 29 CFR 5.5(a)(1)(ii) and the Davis-Bacon poster (WH-1321) shall be posted at all times by the contractor and its subcontractors at the site of the work in a prominent and accessible, place where it can be easily seen by the workers.

(ii) (a) Any class of laborers or mechanics which is not listed in the wage determination and which is to be employed under the contract shall be classified in conformance with the wage determination. HUD shall approve an additional classification and wage rate and fringe benefits therefor only when the following criteria have been met:

(1) The work to be performed by the classification requested is not performed by a classification in the wage determination; and

(2) The classification is utilized in the area by the construction industry; and

(3) The proposed wage rate, including any bona fide fringe benefits, bears a reasonable relationship to the wage rates contained in the wage determination.

(b) If the contractor and the laborers and mechanics to be employed in the classification (if known), or their representatives, and HUD or its designee agree on the classification and wage rate (including the amount designated for fringe benefits where appropriate), a report of the action taken shall be sent by HUD or its designee to the Administrator of the Wage and Hour Division, Employment Standards Administration, U.S. Department of Labor, Washington, D.C. 20210. The Administrator, or an authorized representative, will approve, modify, or disapprove every additional classification action within 30 days of receipt and so advise HUD or its designee or will notify HUD or its designee within the 30-day period that additional time is necessary. (Approved by the Office of Management and Budget under OMB control number 1215-0140.)

(c) In the event the contractor, the laborers or mechanics to be employed in the classification or their representatives, and HUD or its designee do not agree on the proposed classification and wage rate (including the amount designated for fringe benefits, where appropriate), HUD or its designee shall refer the questions, including the views of all interested parties and the recommendation of HUD or its designee, to the Administrator for determination. The Administrator, or an authorized representative, will issue a determination within 30 days of receipt and so advise HUD or its designee or will notify HUD or its designee within the 30-day period that additional time is necessary. (Approved by the Office of Management and Budget under OMB Control Number 1215-0140.)

(d) The wage rate (including fringe benefits where appropriate) determined pursuant to subparagraphs (1)(ii)(b) or (c) of this paragraph, shall be paid to all workers performing work in the classification under this contract from the first day on which work is performed in the classification.

(iii) Whenever the minimum wage rate prescribed in the contract for a class of laborers or mechanics includes a fringe benefit which is not expressed as an hourly rate, the contractor shall either pay the benefit as stated in the wage determination or shall pay another bona fide fringe benefit or an hourly cash equivalent thereof.

(iv) If the contractor does not make payments to a trustee or other third person, the contractor may consider as part

Attachment: Holly Hill LS_13 Rehabilitation_Bid Set Specifications_04.30.19 (2019-R-38 : Lift Station #13 Rehabilitation)

of the wages of any laborer or mechanic the amount of any costs reasonably anticipated in providing bona fide fringe benefits under a plan or program, Provided, That the Secretary of Labor has found, upon the written request of the contractor, that the applicable standards of the Davis-Bacon Act have been met. The Secretary of Labor may require the contractor to set aside in a separate account assets for the meeting of obligations under the plan or program. (Approved by the Office of Management and Budget under OMB Control Number 1215-0140.)

2. Withholding. HUD or its designee shall upon its own action or upon written request of an authorized representative of the Department of Labor withhold or cause to be withheld from the contractor under this contract or any other Federal contract with the same prime contractor, or any other Federally-assisted contract subject to Davis-Bacon prevailing wage requirements, which is held by the same prime contractor so much of the accrued payments or advances as may be considered necessary to pay laborers and mechanics, including apprentices, trainees and helpers, employed by the contractor or any subcontractor the full amount of wages required by the contract In the event of failure to pay any laborer or mechanic, including any apprentice, trainee or helper, employed or working on the site of the work, all or part of the wages required by the contract, HUD or its designee may, after written notice to the contractor, sponsor, applicant, or owner, take such action as may be necessary to cause the suspension of any further payment, advance, or guarantee of funds until such violations have ceased. HUD or its designee may, after written notice to the contractor, disburse such amounts withheld for and on account of the contractor or subcontractor to the respective employees to whom they are due. The Comptroller General shall make such disbursements in the case of direct Davis-Bacon Act contracts.

3. (i) Payrolls and basic records. Payrolls and basic records relating thereto shall be maintained by the contractor during the course of the work preserved for a period of three years thereafter for all laborers and mechanics working at the site of the work. Such records shall contain the name, address, and social security number of each such worker, his or her correct classification, hourly rates of wages paid (including rates of contributions or costs anticipated for bona fide fringe benefits or cash equivalents thereof of the types described in Section l(b)(2)(B) of the Davis-bacon Act), daily and weekly number of hours worked, deductions made and actual wages paid. Whenever the Secretary of Labor has found under 29 CFR 5.5 (a)(1)(iv) that the wages of any laborer or mechanic include the amount of any costs reasonably anticipated in providing benefits under a plan or program described in Section l(b)(2)(B) of the Davis-Bacon Act, the contractor shall maintain records which show that the commitment to provide such benefits is enforceable, that the plan or program is financially responsible, and that the plan or program has been communicated in writing to the laborers or mechanics affected, and records which show the costs anticipated or the actual cost incurred in providing such benefits. Contractors employing apprentices or trainees under approved programs shall maintain written evidence of the registration of apprenticeship programs and certification of trainee programs, the registration of the apprentices and trainees, and the ratios and wage rates prescribed in the applicable programs. (Approved by the Office of Management and Budget under OMB Control Numbers 1215-0140 and 1215-0017.)

(ii) (a) The contractor shall submit weekly for each week in which any contract work is performed a copy of all payrolls to HUD or its designee if the agency is a party to the contract, but if the agency is not such a party, the contractor will submit the payrolls to the applicant sponsor, or owner, as the case may be, for transmission to HUD or its designee. The payrolls submitted shall set out accurately and completely all of the information required to be maintained under 29 CFR 5.5(a)(3)(i) except that full social security numbers and home addresses shall not be included on weekly transmittals. Instead the payrolls shall only need to include an individually identifying number for each employee (e.g., the last four digits of the employee's social security number). The required weekly payroll information may be submitted in any form desired. Optional Form WH-347 is available for this purpose from the Wage and Hour Division Web site at *http://www.dol.gov/esa/whd/forms/wh347instr.htm* or its successor site. The prime contractor is responsible for the submission of copies of payrolls by all subcontractors. Contractors and subcontractors shall maintain the full social security number and current address of each covered worker, and shall provide them upon request to HUD or its designee if the agency is a party to the contract, but if the agency is not such a party, the contractor will submit the payrolls to the applicant sponsor, or owner, as the case may be, for transmission to HUD or its designee, the contractor, or the Wage and Hour Division of the Department of Labor for purposes of an investigation or audit of compliance with prevailing wage requirements. It is not a violation of this subparagraph for a prime contractor to require a subcontractor to provide addresses and social security numbers to the prime contractor for its own records, without weekly submission to HUD or its designee. (Approved by the Office of Management and Budget under OMB Control Number 1215-0149.)

(b) Each payroll submitted shall be accompanied by a "Statement of Compliance," signed by the contractor or subcontractor or his or her agent who pays or supervises the payment of the persons employed under the contract and shall certify the following:

(1) That the payroll for the payroll period contains the information required to be provided under 29 CFR 5.5 (a)(3)(ii), the appropriate information is being maintained under 29 CFR 5.5(a)(3)(i), and that such information is correct and complete;

Attachment: Holly Hill LS_13 Rehabilitation_Bid Set Specifications_04.30.19 (2019-R-38 : Lift Station #13 Rehabilitation)

(2) That each laborer or mechanic (including each helper, apprentice, and trainee) employed on the contract during the payroll period has been paid the full weekly wages earned, without rebate, either directly or indirectly, and that no deductions have been made either directly or indirectly from the full wages earned, other than permissible deductions as set forth in 29 CFR Part 3;

(3) That each laborer or mechanic has been paid not less than the applicable wage rates and fringe benefits or cash equivalents for the classification of work performed, as specified in the applicable wage determination incorporated into the contract.

(c) The weekly submission of a properly executed certification set forth on the reverse side of Optional Form WH-347 shall satisfy the requirement for submission of the "Statement of Compliance" required by subparagraph A. 3. (ii)(b).

(d) The falsification of any of the above certifications may subject the contractor or subcontractor to civil or criminal prosecution under Section 1001 of Title 18 and Section 231 of Title 31 of the United States Code.

(iii) The contractor or subcontractor shall make the records required under subparagraph A.3.(i) available for inspection, copying, or transcription by authorized representatives of HUD or its designee or the Department of Labor, and shall permit such representatives to interview employees during working hours on the job. If the contractor or subcontractor fails to submit the required records or to make them available, HUD or its designee may, after written notice to the contractor, sponsor, applicant or owner, take such action as may be necessary to cause the suspension of any further payment, advance, or guarantee of funds. Furthermore, failure to submit the required records upon request or to make such records available may be grounds for debarment action pursuant to 29 CFR 5.12.

4. Apprentices and Trainees.

(i) Apprentices. Apprentices will be permitted to work at less than the predetermined rate for the work they performed when they are employed pursuant to and individually registered in a bona fide apprenticeship program registered with the U.S. Department of Labor, Employment and Training Administration, Office of Apprenticeship Training, Employer and Labor Services, or with a State Apprenticeship Agency recognized by the Office, or if a person is employed in his or her first 90 days of probationary employment as an apprentice in such an apprenticeship program, who is not individually registered in the program, but who has been certified by the Office of Apprenticeship Training, Employer and Labor Services or a State Apprenticeship Agency (where appropriate) to be eligible for probationary employment as an apprentice. The allowable ratio of apprentices to journeymen on the job site in any craft classification shall not be greater than the ratio permitted to the contractor as to the entire work force under the registered program. Any worker listed on a payroll at an apprentice wage rate, who is not registered or otherwise employed as stated above, shall be paid not less than the applicable wage rate on the wage determination for the classification of work actually performed. In addition, any apprentice performing work on the job site in excess of the ratio permitted under the registered program shall be paid not less than the applicable wage rate on the wage determination for the work actually performed. Where a contractor is performing construction on a project in a locality other than that in which its program is registered, the ratios and wage rates (expressed in percentages of the journeyman's hourly rate) specified in the contractor's or subcontractor's registered program shall be observed. Every apprentice must be paid at not less than the rate specified in the registered program for the apprentice's level of progress, expressed as a percentage of the journeymen hourly rate specified in the applicable wage determination. Apprentices shall be paid fringe benefits in accordance with the provisions of the apprenticeship program. If the apprenticeship program does not specify fringe benefits, apprentices must be paid the full amount of fringe benefits listed on the wage determination for the applicable classification. If the Administrator determines that a different practice prevails for the applicable apprentice classification, fringes shall be paid in accordance with that determination. In the event the Office of Apprenticeship Training, Employer and Labor Services, or a State Apprenticeship Agency recognized by the Office, withdraws approval of an apprenticeship program, the contractor will no longer be permitted to utilize apprentices at less than the applicable predetermined rate for the work performed until an acceptable program is approved.

(ii) Trainees. Except as provided in 29 CFR 5.16, trainees will not be permitted to work at less than the predetermined rate for the work performed unless they are employed pursuant ',to and individually registered in a program which has received prior approval, evidenced by formal certification by the U.S. Department of Labor, Employment and Training Administration. The ratio of trainees to journeymen on the job site shall not be greater than permitted under the plan approved by the Employment and Training Administration. Every trainee must be paid at not less than the rate specified in the approved program for the trainee's level of progress, expressed as a percentage of the journeyman hourly rate specified in the applicable wage determination. Trainees shall be paid fringe benefits in accordance with the provisions of the trainee program. If the trainee program does not mention fringe benefits, trainees shall be paid the full amount of fringe benefits listed on the wage determination unless the Administrator of the Wage and Hour Division determines that there is an apprenticeship program associated with the corresponding journeyman wage rate on the wage determination which provides for less than full fringe benefits for apprentices. Any employee listed on the payroll at a trainee rate who is not registered and participating in a training plan approved by

Attachment: Holly Hill LS_13 Rehabilitation_Bid Set Specifications_04.30.19 (2019-R-38 : Lift Station #13 Rehabilitation)

the Employment and Training Administration shall be paid not less than the applicable wage rate on the wage determination for the work actually performed. In addition, any trainee performing work on the job site in excess of the ratio permitted under the registered program shall be paid not less than the applicable wage rate on the wage determination for the work actually performed. In the event the Employment and Training Administration withdraws approval of a training program, the contractor will no longer be permitted to utilize trainees at less than the applicable predetermined rate for the work performed until an acceptable program is approved.

(iii) Equal employment opportunity. The utilization of apprentices, trainees and journeymen under 29 CFR Part 5 shall be in conformity with the equal employment opportunity requirements of Executive Order 11246, as amended, and 29 CFR Part 30.

5. Compliance with Copeland Act requirements. The contractor shall comply with the requirements of 29 CFR Part 3 which are incorporated by reference in this contract

6. Subcontracts. The contractor or subcontractor will insert in any subcontracts the clauses contained in subparagraphs 1 through 11 in this paragraph A and such other clauses as HUD or its designee may by appropriate instructions require, and a copy of the applicable prevailing wage decision, and also a clause requiring the subcontractors to include these clauses in any lower tier subcontracts. The prime contractor shall be responsible for the compliance by any subcontractor or lower tier subcontractor with all the contract clauses in this paragraph.

7. Contract termination; debarment. A breach of the contract clauses in 29 CFR 5.5 may be grounds for termination of the contract and for debarment as a contractor and a subcontractor as provided in 29 CFR 5.12.

8. Compliance with Davis-Bacon and Related Act Requirements. All rulings and interpretations of the Davis-Bacon and Related Acts contained in 29 CFR Parts 1, 3, and 5 are herein incorporated by reference in this contract

9. Disputes concerning labor standards. Disputes arising out of the labor standards provisions of this contract shall not be subject to the general disputes clause of this contract. Such disputes shall be resolved in accordance with the procedures of the Department of Labor set forth in 29 CFR Parts 5, 6, and 7. Disputes within the meaning of this clause include disputes between the contractor (or any of its subcontractors) and HUD or its designee, the U.S. Department of Labor, or the employees or their representatives.

10. (i) Certification of Eligibility. By entering into this contract the contractor certifies that neither it (nor he or she) nor any person or firm who has an interest in the contractor's firm is a person or firm ineligible to be awarded Government contracts by virtue of Section 3(a) of the Davis-Bacon Act or 29 CFR 5.12(a)(1) or to be awarded HUD contracts or participate in HUD programs pursuant to 24 CFR Part 24.

(ii) No part of this contract shall be subcontracted to any person or firm ineligible for award of a Government contract by virtue of Section 3(a) of the Davis-Bacon Act or 29 CFR 5.12(a)(1) or to be awarded HUD contracts or participate in HUD programs pursuant to 24 CFR Part 24.

(iii) The penalty for making false statements is prescribed in the U.S. Criminal Code, 18 U.S.C. 1001. Additionally, U.S. Criminal Code, Section 1 01 0, Title 18, U.S.C., "Federal Housing Administration transactions", provides in part: "Whoever, for the purpose of . . . influencing in any way the action of such Administration ..... makes, utters or publishes any statement knowing the same to be false ..... shall be fined not more than $5,000 or imprisoned not more than two years, or both."

11. Complaints, Proceedings, or Testimony by Employees. No laborer or mechanic to whom the wage, salary, or other labor standards provisions of this Contract are applicable shall be discharged or in any other manner discriminated against by the Contractor or any subcontractor because such employee has filed any complaint or instituted or caused to be instituted any proceeding or has testified or is about to testify in any proceeding under or relating to the labor standards applicable under this Contract to his employer.

B. Contract Work Hours and Safety Standards Act. The provisions of this paragraph B are applicable where the amount of the prime contract exceeds $100,000. As used in this paragraph, the terms "laborers" and "mechanics" include watchmen and guards.

(1) Overtime requirements. No contractor or subcontractor contracting for any part of the contract work which may require or involve the employment of laborers or mechanics shall require or permit any such laborer or mechanic in any workweek in which the individual is employed on such work to work in excess of 40 hours in such workweek unless such laborer or mechanic receives compensation at a rate not less than one and one-half times the basic rate of pay for all hours worked in excess of 40 hours in such workweek.

(2) Violation; liability for unpaid wages; liquidated damages. In the event of any violation of the clause set forth in subparagraph (1) of this paragraph, the contractor and any subcontractor responsible therefor shall be liable for the unpaid wages. In addition, such contractor and subcontractor shall be liable to the United States (in the case of work done under contract for the District of Columbia or a territory, to such District or to such territory), for liquidated damages. Such liquidated damages shall be computed with respect to each individual laborer or mechanic, including watchmen and guards, employed in violation of the clause set forth in subparagraph (1) of this paragraph, in the sum of $25 for each calendar day on which such individual was required or permitted to work in excess of the standard workweek of 40 hours without payment of the overtime wages required by the clause set forth in sub paragraph (1) of this paragraph.

Attachment: Holly Hill LS_13 Rehabilitation_Bid Set Specifications_04.30.19 (2019-R-38 : Lift Station #13 Rehabilitation)

(3) Withholding for unpaid wages and liquidated damages. HUD or its designee shall upon its own action or upon written request of an authorized representative of the Department of Labor withhold or cause to be withheld, from any moneys payable on account of work performed by the contractor or subcontractor under any such contract or any other Federal contract with the same prime contract, or any other Federally-assisted contract subject to the Contract Work Hours and Safety Standards Act which is held by the same prime contractor such sums as may be determined to be necessary to satisfy any liabilities of such contractor or subcontractor for unpaid wages and liquidated damages as provided in the clause set forth in subparagraph (2) of this paragraph.

(4) Subcontracts. The contractor or subcontractor shall insert in any subcontracts the clauses set forth in subparagraph (1) through (4) of this paragraph and also a clause requiring the subcontractors to include these clauses in any lower tier subcontracts. The prime contractor shall be responsible for compliance by any subcontractor or lower tier subcontractor with the clauses set forth in subparagraphs (1) through (4) of this paragraph.

C. Health and Safety. The provisions of this paragraph C are applicable where the amount of the prime contract exceeds $100,000.

(1) No laborer or mechanic shall be required to work in surroundings or under working conditions which are unsanitary, hazardous, or dangerous to his health and safety as determined under construction safety and health standards promulgated by the Secretary of Labor by regulation.

(2) The Contractor shall comply with all regulations issued by the Secretary of Labor pursuant to Title 29 Part 1926 and failure to comply may result in imposition of sanctions pursuant to the Contract Work Hours and Safety Standards Act, (Public Law 91-54, 83 Stat 96). 40 USC 3701 et seq.

(3) The contractor shall include the provisions of this paragraph in every subcontract so that such provisions will be binding on each subcontractor. The contractor shall take such action with respect to any subcontractor as the Secretary of Housing and Urban Development or the Secretary of Labor shall direct as a means of enforcing such provisions.

Attachment: Holly Hill LS_13 Rehabilitation_Bid Set Specifications_04.30.19 (2019-R-38 : Lift Station #13 Rehabilitation)

Attachment II

Section 3 requires that the following provisions ("the section 3 clause"), be included in every contract that involves section 3 projects.

A. The work to be performed under this contract is subject to the requirements of section 3 of the Housing and Urban Development Act of 1968, as amended, 12 U.S.C. 1701u (section 3). The purpose of section 3 is to ensure that employment and other economic opportunities generated by HUD assistance or HUD-assisted projects covered by section 3, shall, to the greatest extent feasible, be directed to low- and very low-income persons, particularly persons who are recipients of HUD assistance for housing.

B. The parties to this contract agree to comply with HUD's regulations in 24 CFR part 135, which implement section 3. As evidenced by their execution of this contract, the parties to this contract certify that they are under no contractual or other impediment that would prevent them from complying with the part 135 regulations.

C. The contractor agrees to send to each labor organization or representative of workers with which the contractor has a collective bargaining agreement or other understanding, if any, a notice advising the labor organization or workers' representative of the contractor's commitments under this section 3 clause, and will post copies of the notice in conspicuous places at the work site where both employees and applicants for training and employment positions can see the notice. The notice shall describe the section 3 preference, shall set forth minimum number and job titles subject to hire, availability of apprenticeship and training positions, the qualifications for each; and the name and location of the person(s) taking applications for each of the positions; and the anticipated date the work shall begin.

D. The contractor agrees to include this section 3 clause in every subcontract subject to compliance with regulations in 24 CFR part 135, and agrees to take appropriate action, as provided in an applicable provision of the subcontract or in this section 3 clause, upon a finding that the subcontract is in violation of the regulations in 24 CFR part 135. The contractor will not subcontract with any subcontractor where the contractor has notice or knowledge that the subcontractor has been found in violation of the regulations in 24 CFR part 135.

E. The contractor will certify that any vacant employment positions, including training positions, that are filled (1) after the contractor is selected but before the contract is executed, and (2) with persons other than those to whom the regulations of 24 CFR part 135 require employment opportunities to be directed, were not filled to circumvent the contractor's obligations under 24 CFR part 135.

F. Non-compliance with HUD's regulations in 24 CFR part 135 may result in sanctions, termination of this contract for default, and debarment or suspension from future HUD assisted contracts.

G. With respect to work performed in connection with section 3 covered Indian housing assistance, section 7(b) of the Indian Self-Determination and Education Assistance Act (25 U.S.C. 450e) also applies to the work to be performed under this contract. Section 7(b) requires that to the greatest extent feasible (i) preference and opportunities for training and employment shall be given to Indians, and (ii) preference in the award of contract and subcontracts shall be given to Indian organizations and Indian-owned Economic Enterprises. Parties to this contract that are subject to the provisions of section 3 and section 7(b) agree to comply with section 3 to the maximum extent feasible, but not in derogation of compliance with section 7(b).

Attachment: Holly Hill LS_13 Rehabilitation_Bid Set Specifications_04.30.19 (2019-R-38 : Lift Station #13 Rehabilitation)

Wage and Hour Division (WHD)

Instructions For Completing Payroll Form, WH-347

- WH-347 (PDF)
  OMB Control No. 1235-0008, Expires 04/30/2021.

General: Form WH-347has been made available for the convenience of contractors and subcontractors required by their Federal or Federally-aided construction-type contracts and subcontracts to submit weekly payrolls. Properly filled out, this form will satisfy the requirements of Regulations, Parts 3 and 5 (29 C.F.R., Subtitle A), as to payrolls submitted in connection with contracts subject to the Davis-Bacon and related Acts.

While completion of Form WH-347 is optional, it is mandatory for covered contractors and subcontractors performing work on Federally financed or assisted construction contracts to respond to the information collection contained in 29 C.F.R. §§ 3.3, 5.5(a). The Copeland Act (40 U.S.C. § 3145) requires contractors and subcontractors performing work on Federally financed or assisted construction contracts to "furnish weekly a statement with respect to the wages paid each employee during the preceding week." U.S. Department of Labor (DOL) Regulations at 29 C.F.R. § 5.5(a)(3)(ii) require contractors to submit weekly a copy of all payrolls to the Federal agency contracting for or financing the construction project, accompanied by a signed "Statement of Compliance" indicating that the payrolls are correct and complete and that each laborer or mechanic has been paid not less than the proper Davis-Bacon prevailing wage rate for the work performed. DOL and federal contracting agencies receiving this information review the information to determine that employees have received legally required wages and fringe benefits.

Under the Davis-Bacon and related Acts, the contractor is required to pay not less than prevailing wage, including fringe benefits, as predetermined by the Department of Labor. The contractor's obligation to pay fringe benefits may be met either by payment of the fringe benefits to bona fide benefit plans, funds or programs or by making payments to the covered workers (laborers and mechanics) as cash in lieu of fringe benefits.

This payroll provides for the contractor to show on the face of the payroll all monies to each worker, whether as basic rates or as cash in lieu of fringe benefits, and provides for the contractor's representation in the statement of compliance on the payroll (as shown on page 2) that he/she is paying for fringe benefits required by the contract and not paid as cash in lieu of fringe benefits. Detailed instructions concerning the preparation of the payroll follow:

Contractor or Subcontractor: Fill in your firm's name and check appropriate box.

Address: Fill in your firm's address.

Payroll No.: Beginning with the number "1", list the payroll number for the submission.

For Week Ending: List the workweek ending date.

Project and Location: Self-explanatory.

Project or Contract No.: Self-explanatory.

Column 1 - Name and Individual Identifying Number of Worker: Enter each worker's full name and an individual identifying number (e.g., last four digits of worker's social security number) on each weekly payroll submitted.

Attachment: Holly Hill LS_13 Rehabilitation_Bid Set Specifications_04.30.19 (2019-R-38 : Lift Station #13 Rehabilitation)

Column 2 - No. of Withholding Exemptions: This column is merely inserted for the employer's convenience and is not a requirement of Regulations, Part 3 and 5.

Column 3 - Work Classifications: List classification descriptive of work actually performed by each laborer or mechanic. Consult classification and minimum wage schedule set forth in contract specifications. If additional classifications are deemed necessary, see Contracting Officer or Agency representative. An individual may be shown as having worked in more than one classification provided an accurate breakdown or hours worked in each classification is maintained and shown on the submitted payroll by use of separate entries.

Column 4 - Hours worked: List the day and date and straight time and overtime hours worked in the applicable boxes. On all contracts subject to the Contract Work Hours Standard Act, enter hours worked in excess of 40 hours a week as "overtime".

Column 5 - Total: Self-explanatory

Column 6 - Rate of Pay (Including Fringe Benefits): In the "straight time" box for each worker, list the actual hourly rate paid for straight time worked, plus cash paid in lieu of fringe benefits paid. When recording the straight time hourly rate, any cash paid in lieu of fringe benefits may be shown separately from the basic rate. For example, "$12.25/.40" would reflect a $12.25 base hourly rate plus $0.40 for fringe benefits. This is of assistance in correctly computing overtime. See "Fringe Benefits" below. When overtime is worked, show the overtime hourly rate paid plus any cash in lieu of fringe benefits paid in the "overtime" box for each worker; otherwise, you may skip this box. See "Fringe Benefits" below. Payment of not less than time and one-half the basic or regular rate paid is required for overtime under the Contract Work Hours Standard Act of 1962 if the prime contract exceeds $100,000. In addition to paying no less than the predetermined rate for the classification which an individual works, the contractor must pay amounts predetermined as fringe benefits in the wage decision made part of the contract to approved fringe benefit plans, funds or programs or shall pay as cash in lieu of fringe benefits. See "FRINGE BENEFITS" below.

Column 7 - Gross Amount Earned: Enter gross amount earned on this project. If part of a worker's weekly wage was earned on projects other than the project described on this payroll, enter in column 7 first the amount earned on the Federal or Federally assisted project and then the gross amount earned during the week on all projects, thus "$163.00/$420.00" would reflect the earnings of a worker who earned $163.00 on a Federally assisted construction project during a week in which $420.00 was earned on all work.

Column 8 - Deductions: Five columns are provided for showing deductions made. If more than five deduction are involved, use the first four columns and show the balance deductions under "Other" column; show actual total under "Total Deductions" column; and in the attachment to the payroll describe the deduction(s) contained in the "Other" column. All deductions must be in accordance with the provisions of the Copeland Act Regulations, 29 C.F.R., Part 3. If an individual worked on other jobs in addition to this project, show actual deductions from his/her weekly gross wage, and indicate that deductions are based on his gross wages.

Column 9 - Net Wages Paid for Week: Self-explanatory.

Totals - Space has been left at the bottom of the columns so that totals may be shown if the contractor so desires.

Statement Required by Regulations, Parts 3 and 5: While the "statement of compliance" need not be notarized, the statement (on page 2 of the payroll form) is subject to the penalties provided by 18 U.S.C. § 1001, namely, a fine, possible imprisonment of not more than 5 years, or both. Accordingly, the party signing this statement should have knowledge of the facts represented as true.

Items 1and 2: Space has been provided between items (1) and (2) of the statement for describing any deductions made. If all deductions made are adequately described in the "Deductions" column above, state

Attachment: Holly Hill LS_13 Rehabilitation_Bid Set Specifications_04.30.19 (2019-R-38 : Lift Station #13 Rehabilitation)

"*See* Deductions column in this payroll." *See* "FRINGE BENEFITS" below for instructions concerning filling out paragraph 4 of the statement.

Item 4 FRINGE BENEFITS - Contractors who pay all required fringe benefits: If paying all fringe benefits to approved plans, funds, or programs in amounts not less than were determined in the applicable wage decision of the Secretary of Labor, show the basic cash hourly rate and overtime rate paid to each worker on the face of the payroll and check paragraph 4(a) of the statement on page 2 of the WH-347 payroll form to indicate the payment. Note any exceptions in section 4(c).

Contractors who pay no fringe benefits: If not paying all fringe benefits to approved plans, funds, or programs in amounts of at least those that were determined in the applicable wage decision of the Secretary of Labor, pay any remaining fringe benefit amount to each laborer and mechanic and insert in the "straight time" of the "Rate of Pay" column of the payroll an amount not less than the predetermined rate for each classification plus the amount of fringe benefits determined for each classification in the application wage decision. Inasmuch as it is not necessary to pay time and a half on cash paid in lieu of fringe benefits, the overtime rate shall be not less than the sum of the basic predetermined rate, plus the half time premium on basic or regular rate, plus the required cash in lieu of fringe benefits at the straight time rate. In addition, check paragraph 4(b) of the statement on page 2 the payroll form to indicate the payment of fringe benefits in cash directly to the workers. Note any exceptions in section 4(c).

Use of Section 4(c), Exceptions

Any contractor who is making payment to approved plans, funds, or programs in amounts less than the wage determination requires is obliged to pay the deficiency directly to the covered worker as cash in lieu of fringe benefits. Enter any exceptions to section 4(a) or 4(b) in section 4(c). Enter in the Exception column the craft, and enter in the Explanation column the hourly amount paid each worker as cash in lieu of fringe benefits and the hourly amount paid to plans, funds, or programs as fringe benefits. The contractor must pay an amount not less than the predetermined rate plus cash in lieu of fringe benefits as shown in section 4(c) to each such individual for all hours worked (unless otherwise provided by applicable wage determination) on the Federal or Federally assisted project. Enter the rate paid and amount of cash paid in lieu of fringe benefits per hour in column 6 on the payroll. See paragraph on "Contractors who pay no fringe benefits" for computation of overtime rate.

Public Burden Statement: We estimate that it will take an average of 55 minutes to complete this collection of information, including time for reviewing instructions, searching existing data sources, gathering and maintaining the data needed, and completing and reviewing the collection of information. If you have any comments regarding these estimates or any other aspect of this collection of information, including suggestions for reducing this burden, send to the Administrator, Wage and Hour Division, ESA, U.S. Department of Labor, Room S3502, 200 Constitution Avenue, N.W., Washington, D.C. 20210.

Attachment: Holly Hill LS_13 Rehabilitation_Bid Set Specifications_04.30.19 (2019-R-38 : Lift Station #13 Rehabilitation)

U.S. Department of Labor
Wage and Hour Division

PAYROLL

(For Contractor's Optional Use; See Instructions at www.dol.gov/whd/forms/wh347instr.htm)

Persons are not required to respond to the collection of information unless it displays a currently valid OMB control number.

U.S. Wage and Hour Divisi

Rev. Dec. 2008

OMB No.:1235-0(
Expires: 04/30/20

NAME OF CONTRACTOR ☐ OR SUBCONTRACTOR ☐

ADDRESS

PAYROLL NO.

FOR WEEK ENDING

PROJECT AND LOCATION

PROJECT OR CONTRACT NO.

(1) NAME AND INDIVIDUAL IDENTIFYING NUMBER (e.g., LAST FOUR DIGITS OF SOCIAL SECURITY NUMBER) OF WORKER	(2) NO. OF WITHHOLDING EXEMPTIONS	(3) WORK CLASSIFICATION	OT. OR ST.	(4) DAY AND DATE / HOURS WORKED EACH DAY							(5) TOTAL HOURS	(6) RATE OF PAY	(7) GROSS AMOUNT EARNED	(8) DEDUCTIONS FICA	WITH-HOLDING TAX			OTHER	TOTAL DEDUCTIONS	(9) NET WAGE PAID FOR WE
			O																	
			S																	
			O																	
			S																	
			O																	
			S																	
			O																	
			S																	
			O																	
			S																	
			O																	
			S																	
			O																	
			S																	
			O																	
			S																	

While completion of Form WH-347 is optional, it is mandatory for covered contractors and subcontractors performing work on Federally financed or assisted construction contracts to respond to the information collection contained in 29 C.F.R. §§ 3.3, 5.5(a). The Copeland Act (40 U.S.C. § 3145) contractors and subcontractors performing work on Federally financed or assisted construction contracts to "furnish weekly a statement with respect to the wages paid each employee during the preceding week." U.S. Department of Labor (DOL) regulations at 29 C.F.R. § 5.5(a)(3)(ii) require contractors to submit weekly a copy of all payrolls to the Federal agency contracting for or financing the construction project, accompanied by a signed "Statement of Compliance" indicating that the payrolls are correct and complete and that each lal or mechanic has been paid not less than the proper Davis-Bacon prevailing wage rate for the work performed. DOL and federal contracting agencies receiving this information review the information to determine that employees have received legally required wages and fringe bene

Public Burden Statement

We estimate that is will take an average of 55 minutes to complete this collection, including time for reviewing instructions, searching existing data sources, gathering and maintaining the data needed, and completing and reviewing the collection of information. If you have any comments regarding these estimates or any other aspect of this collection, including suggestions for reducing this burden, send them to the Administrator, Wage and Hour Division, U.S. Department of Labor, Room S3502, 200 Constitution Avenue, N.W. Washington, D.C. 20210

(over)

Date _____

I, _____ _____
(Name of Signatory Party) (Title)

do hereby state:

(1) That I pay or supervise the payment of the persons employed by

_____ on the
(Contractor or Subcontractor)

_____; that during the payroll period commencing on the
(Building or Work)

_____ day of _____, _____, and ending the _____ day of _____, _____,

all persons employed on said project have been paid the full weekly wages earned, that no rebates have been or will be made either directly or indirectly to or on behalf of said

_____ from the full
(Contractor or Subcontractor)

weekly wages earned by any person and that no deductions have been made either directly or indirectly from the full wages earned by any person, other than permissible deductions as defined in Regulations, Part 3 (29 C.F.R. Subtitle A), issued by the Secretary of Labor under the Copeland Act, as amended (48 Stat. 948, 63 Stat. 108, 72 Stat. 967; 76 Stat. 357; 40 U.S.C. § 3145), and described below:

_____

_____

_____

_____

(2) That any payrolls otherwise under this contract required to be submitted for the above period are correct and complete; that the wage rates for laborers or mechanics contained therein are not less than the applicable wage rates contained in any wage determination incorporated into the contract; that the classifications set forth therein for each laborer or mechanic conform with the work he performed.

(3) That any apprentices employed in the above period are duly registered in a bona fide apprenticeship program registered with a State apprenticeship agency recognized by the Bureau of Apprenticeship and Training, United States Department of Labor, or if no such recognized agency exists in a State, are registered with the Bureau of Apprenticeship and Training, United States Department of Labor.

(4) That:

(a) WHERE FRINGE BENEFITS ARE PAID TO APPROVED PLANS, FUNDS, OR PROGRAMS

☐ – in addition to the basic hourly wage rates paid to each laborer or mechanic listed in the above referenced payroll, payments of fringe benefits as listed in the contract have been or will be made to appropriate programs for the benefit of such employees, except as noted in section 4(c) below.

(b) WHERE FRINGE BENEFITS ARE PAID IN CASH

☐ – Each laborer or mechanic listed in the above referenced payroll has been paid as indicated on the payroll, an amount not less than the sum of the applicable basic hourly wage rate plus the amount of the required fringe benefits as listed in the contract, except as noted in section 4(c) below.

(c) EXCEPTIONS

EXCEPTION (CRAFT)	EXPLANATION

REMARKS:

NAME AND TITLE	SIGNATURE

THE WILLFUL FALSIFICATION OF ANY OF THE ABOVE STATEMENTS MAY SUBJECT THE CONTRACTOR OR SUBCONTRACTOR TO CIVIL OR CRIMINAL PROSECUTION. SEE SECTION 1001 OF TITLE 18 AND SECTION 231 OF TITLE 31 OF THE UNITED STATES CODE.

Attachment: Holly Hill LS_13 Rehabilitation_Bid Set Specifications_04.30.19 (2019-R-38 : Lift Station #13

General Decision Number: FL190137 01/04/2019 FL137

Superseded General Decision Number: FL20180180

State: Florida

Construction Type: Heavy

County: Volusia County in Florida.

HEAVY CONSTRUCTION PROJECTS (Including Sewer and Water Lines)
(EXCLUDING CAPE CANAVERAL AIR FORCE STATION, PATRICK AIR FORCE
BASE, KENNEDY SPACE FLIGHT CENTER AND MALABAR RADAR SITE)

Note: Under Executive Order (EO) 13658, an hourly minimum wage of $10.60 for calendar year 2019 applies to all contracts subject to the Davis-Bacon Act for which the contract is awarded (and any solicitation was issued) on or after January 1, 2015. If this contract is covered by the EO, the contractor must pay all workers in any classification listed on this wage determination at least $10.60 per hour (or the applicable wage rate listed on this wage determination, if it is higher) for all hours spent performing on the contract in calendar year 2019. If this contract is covered by the EO and a classification considered necessary for performance of work on the contract does not appear on this wage determination, the contractor must pay workers in that classification at least the wage rate determined through the conformance process set forth in 29 CFR 5.5(a)(1)(ii) (or the EO minimum wage rate, if it is higher than the conformed wage rate). The EO minimum wage rate will be adjusted annually. Please note that this EO applies to the above-mentioned types of contracts entered into by the federal government that are subject to the Davis-Bacon Act itself, but it does not apply to contracts subject only to the Davis-Bacon Related Acts, including those set forth at 29 CFR 5.1(a)(2)-(60). Additional information on contractor requirements and worker protections under the EO is available at www.dol.gov/whd/govcontracts.

Modification Number	Publication Date
0	01/04/2019

ENGI0673-013 05/01/2013

	Rates	Fringes
OPERATOR: Oiler	$ 20.36	10.85

---

* IRON0808-003 01/01/2018

	Rates	Fringes
IRONWORKER, STRUCTURAL	$ 26.03	13.95

LABO0517-002 05/01/2017

Attachment: Holly Hill LS_13 Rehabilitation_Bid Set Specifications_04.30.19 (2019-R-38 : Lift Station #13 Rehabilitation)

	Rates	Fringes
LABORER: Grade Checker	$ 19.20	7.85

PAIN1010-011 08/01/2018

	Rates	Fringes
Painter - Brush, Roller & Spray	$ 24.71	12.95

SUFL2009-176 06/24/2009

	Rates	Fringes
CARPENTER, Excludes Form Work	$ 13.56	1.84
CEMENT MASON/CONCRETE FINISHER	$ 12.63	0.00
ELECTRICIAN	$ 16.71	3.51
FORM WORKER	$ 11.36	0.00
LABORER: Common or General	$ 9.03	0.81
LABORER: Landscape	$ 8.44	0.00
LABORER: Pipelayer	$ 11.17	1.27
LABORER: Power Tool Operator (Hand Held Drills/Saws, Jackhammer and Power Saws Only)	$ 10.63	2.20
OPERATOR: Asphalt Paver	$ 11.88	0.00
OPERATOR: Backhoe Loader Combo	$ 16.10	2.44
OPERATOR: Backhoe/Excavator	$ 13.12	2.58
OPERATOR: Bulldozer	$ 12.88	0.00
OPERATOR: Crane	$ 14.88	3.17
OPERATOR: Grader/Blade	$ 16.00	2.84
OPERATOR: Loader	$ 13.38	0.00
OPERATOR: Mechanic	$ 13.83	2.19
OPERATOR: Roller	$ 10.50	0.00
OPERATOR: Scraper	$ 11.00	1.74
OPERATOR: Trackhoe	$ 20.92	5.50
OPERATOR: Tractor	$ 10.00	0.00
TRUCK DRIVER, Includes Dump		

Attachment: Holly Hill LS_13 Rehabilitation_Bid Set Specifications_04.30.19 (2019-R-38 : Lift Station #13 Rehabilitation)

Truck.....$ 11.07 0.00

TRUCK DRIVER: Lowboy Truck.....$ 11.00 0.00

TRUCK DRIVER: Off the Road
Truck.....$ 12.21 1.97

WELDERS - Receive rate prescribed for craft performing operation to which welding is incidental.

==========

Note: Executive Order (EO) 13706, Establishing Paid Sick Leave for Federal Contractors applies to all contracts subject to the Davis-Bacon Act for which the contract is awarded (and any solicitation was issued) on or after January 1, 2017. If this contract is covered by the EO, the contractor must provide employees with 1 hour of paid sick leave for every 30 hours they work, up to 56 hours of paid sick leave each year. Employees must be permitted to use paid sick leave for their own illness, injury or other health-related needs, including preventive care; to assist a family member (or person who is like family to the employee) who is ill, injured, or has other health-related needs, including preventive care; or for reasons resulting from, or to assist a family member (or person who is like family to the employee) who is a victim of, domestic violence, sexual assault, or stalking. Additional information on contractor requirements and worker protections under the EO is available at www.dol.gov/whd/govcontracts.

Unlisted classifications needed for work not included within the scope of the classifications listed may be added after award only as provided in the labor standards contract clauses (29CFR 5.5 (a) (1) (ii)).

The body of each wage determination lists the classification and wage rates that have been found to be prevailing for the cited type(s) of construction in the area covered by the wage determination. The classifications are listed in alphabetical order of "identifiers" that indicate whether the particular rate is a union rate (current union negotiated rate for local), a survey rate (weighted average rate) or a union average rate (weighted union average rate).

Union Rate Identifiers

A four letter classification abbreviation identifier enclosed in dotted lines beginning with characters other than "SU" or "UAVG" denotes that the union classification and rate were prevailing for that classification in the survey. Example: PLUM0198-005 07/01/2014. PLUM is an abbreviation identifier of the union which prevailed in the survey for this classification, which in this example would be Plumbers. 0198 indicates the local union number or district council number where applicable, i.e., Plumbers Local 0198. The next number,

Attachment: Holly Hill LS_13 Rehabilitation_Bid Set Specifications_04.30.19 (2019-R-38 : Lift Station #13 Rehabilitation)

005 in the example, is an internal number used in processing the wage determination. 07/01/2014 is the effective date of the most current negotiated rate, which in this example is July 1, 2014.

Union prevailing wage rates are updated to reflect all rate changes in the collective bargaining agreement (CBA) governing this classification and rate.

Survey Rate Identifiers

Classifications listed under the "SU" identifier indicate that no one rate prevailed for this classification in the survey and the published rate is derived by computing a weighted average rate based on all the rates reported in the survey for that classification. As this weighted average rate includes all rates reported in the survey, it may include both union and non-union rates. Example: SULA2012-007 5/13/2014. SU indicates the rates are survey rates based on a weighted average calculation of rates and are not majority rates. LA indicates the State of Louisiana. 2012 is the year of survey on which these classifications and rates are based. The next number, 007 in the example, is an internal number used in producing the wage determination. 5/13/2014 indicates the survey completion date for the classifications and rates under that identifier.

Survey wage rates are not updated and remain in effect until a new survey is conducted.

Union Average Rate Identifiers

Classification(s) listed under the UAVG identifier indicate that no single majority rate prevailed for those classifications; however, 100% of the data reported for the classifications was union data. EXAMPLE: UAVG-OH-0010 08/29/2014. UAVG indicates that the rate is a weighted union average rate. OH indicates the state. The next number, 0010 in the example, is an internal number used in producing the wage determination. 08/29/2014 indicates the survey completion date for the classifications and rates under that identifier.

A UAVG rate will be updated once a year, usually in January of each year, to reflect a weighted average of the current negotiated/CBA rate of the union locals from which the rate is based.

WAGE DETERMINATION APPEALS PROCESS

1.) Has there been an initial decision in the matter? This can be:

* an existing published wage determination
* a survey underlying a wage determination
* a Wage and Hour Division letter setting forth a position on a wage determination matter
* a conformance (additional classification and rate) ruling

Attachment: Holly Hill LS_13 Rehabilitation_Bid Set Specifications_04.30.19 (2019-R-38 : Lift Station #13 Rehabilitation)

On survey related matters, initial contact, including requests for summaries of surveys, should be with the Wage and Hour Regional Office for the area in which the survey was conducted because those Regional Offices have responsibility for the Davis-Bacon survey program. If the response from this initial contact is not satisfactory, then the process described in 2.) and 3.) should be followed.

With regard to any other matter not yet ripe for the formal process described here, initial contact should be with the Branch of Construction Wage Determinations. Write to:

Branch of Construction Wage Determinations
Wage and Hour Division
U.S. Department of Labor
200 Constitution Avenue, N.W.
Washington, DC 20210

2.) If the answer to the question in 1.) is yes, then an interested party (those affected by the action) can request review and reconsideration from the Wage and Hour Administrator (See 29 CFR Part 1.8 and 29 CFR Part 7). Write to:

Wage and Hour Administrator
U.S. Department of Labor
200 Constitution Avenue, N.W.
Washington, DC 20210

The request should be accompanied by a full statement of the interested party's position and by any information (wage payment data, project description, area practice material, etc.) that the requestor considers relevant to the issue.

3.) If the decision of the Administrator is not favorable, an interested party may appeal directly to the Administrative Review Board (formerly the Wage Appeals Board). Write to:

Administrative Review Board
U.S. Department of Labor
200 Constitution Avenue, N.W.
Washington, DC 20210

4.) All decisions by the Administrative Review Board are final.

==========

END OF GENERAL DECISION

Attachment: Holly Hill LS_13 Rehabilitation_Bid Set Specifications_04.30.19 (2019-R-38 : Lift Station #13 Rehabilitation)

County of Volusia
Community Assistance
110 W. Rich Avenue
DeLand, FL 32720

Minority & Women Business Reporting Form (MWBE)
Information and Instructions for Contractors & Subcontractors

Reporting

This report shall be completed by all contractors and subcontractors for reporting contract and subcontract activities for housing rehabilitation and construction projects as required by the County of Volusia Community Assistance Division. Contract/subcontracts of less than $10,000 must be reported only if such contracts represent a significant portion of the total contracting activity. Include only the contracts executed during this reporting period.

- Section 7a:
  - ✓ **Amount of Contract/Subcontract:** Enter the dollar amount rounded to the nearest dollar. If subcontractor ID number is provided in 7f, the dollar figure would be for the subcontract only and not for the prime contract.

- Section 7b:
  - ✓ **Type of Trade:** Enter the numeric code which best indicates each contractor's/subcontractor's service type. If subcontractor ID number is provided in 7f, the type of trade code would be for the subcontractor only and not for the prime contractor.

    * The "other" category includes supply, professional services, and all other activities except construction and education/training activities

- Section 7c:
  - ✓ **Business Racial/Ethnic/Gender Code:** Enter the numeric code which best indicates the racial/ethnic/gender character of the owner(s) and controller(s) of 51% of the business. When 51% or more is not owned and controlled by any single racial/ethnic/gender category, enter the code which seems most appropriate. If the subcontractor ID number is provided, the code would apply to the subcontractor and not the prime contractor

- Section 7d:
  - ✓ **Women Owned Business:** Enter "yes" or "no" to if each listed agency is women owned

- Section 7e:
  - ✓ **Contractor Identification Number:** Enter the Employer (IRS/FEIN) Number of the Prime Contractor as the unique identifier of the prime recipient of HUD funds. Note that the Employer (IRS) Number must be provided for each contract/subcontract awarded.

- Section 7f:
  - ✓ **Subcontractor Identification Number:** Enter the Employer (IRS/FEIN) Number of the subcontractor as the unique identifier for each subcontract awarded from HUD funds. When the subcontractor ID number is provided, the respective Prime Contractor ID Number must also be provided.

- Section 7g:
  - ✓ **Contractor/Subcontractor Business Name and Address:** Enter this information for each firm receiving contract/subcontract activity only one time on each report for each firm.

Attachment: Holly Hill LS_13 Rehabilitation_Bid Set Specifications_04.30.19 (2019-R-38 : Lift Station #13 Rehabilitation)

County of Volusia Community Assistance Division - Contract and Subcontract - Minority and Women Business Reporting Form

To be completed by Volusia County Staff: Project Name: Lift Station #13 Date of Award: TBD

Amount of Contract or Subcontract 7a.	Type of Trade Code (See below) 7b.	Contractor or Subcontractor Business Racial/Ethnic (See below) 7c.	Woman Owned Business (Yes or No) 7d.	Prime Contractor Identification Number (IRS/FEIN) 7e.	Subcontractor Identification Number (IRS/FEIN) 7f.	Contractor/Subcontractor Business Name and Address 7g.				
						Business Name	Street	City	State	Zip

Name/Title: _____ Signature: _____ Date: _____

7b: Type of Trade Codes: CPD

1 = New Construction
2 = Education/Training
3 = Other

7c: Racial/ Ethnic Codes

1= White Amercians
2= Black Americans
3= Native Americans
4= Hispanic American
5= Asian/Pacific American

Attachment: Holly Hill LS_13 Rehabilitation_Bid Set Specifications_04.30.19 (2019-R-38 : Lift Station #13

County of Volusia
Community Assistance
110 W. Rich Avenue
DeLand, FL 32720

Section 3 Information and Instructions

What is Section 3?

Section 3 is a provision of the Housing and Urban Development Act of 1968. The purpose of Section 3 is to ensure that employment and other economic opportunities generated by certain HUD financial assistance shall, to the greatest extent feasible, and consistent with existing Federal, State and local laws and regulations, be directed to low- and very low income persons, particularly those who are recipients of government assistance for housing, and to business concerns which provide economic opportunities to low- and very low-income persons.

What does Section 3 require contractors and subcontractors to do?

- Provide employment and training opportunities to Section 3 residents by meeting the percentage goals in 24 CFR 135.30(b)(3)
- Provide subcontracting opportunities to Section 3 businesses by meeting the percentage goals in 24 CFR 135.30(c)

In addition, all contracts with contractors and subcontractors for Section 3 covered projects must contain the Section 3 contract clause in the contracts of its contractors and subcontractors. The HUD mandated Section 3 language ("Section 3 Clause") may be found at 24 CFR §135.38. The Section 3 Clause may also be found within the Supplemental Conditions which are included in the bid documents. All contracts for U.S. Department of Housing and Urban Development funded projects will contain the Section 3 contract clause.

Volusia County Community Assistance encourages all contractors and subcontractors to extend employment and training opportunities to Section 3 residents for any new opportunities which have been created as a result of the contract award. Reporting on Section 3 opportunities is required for all contractors and subcontractors that are awarded contracts for U.S. Department of Housing and Urban Development funded projects.

What is a Section 3 Resident?

A Section 3 Resident is 1) a public housing resident, or 2) a low- or very low-income person residing in the metropolitan area or non-metropolitan county where the Section 3 covered project is expended.

What is a Section 3 business?

A Section 3 business is defined as one:

- That is 51 percent or more owned by Section 3 residents; <u>or</u>
- Whose permanent, full-time employees include persons, at least 30 percent of whom are currently Section 3 residents, <u>or</u> within three years of the date of their first employment with the business were Section 3 residents; <u>or</u>
- That provides evidence of a commitment to subcontract in excess of 25 percent of the dollar award of all subcontracts to be awarded by the business to other Section 3 businesses (see first two definitions above).

Reporting

With Bid or Quote (Solicitation documents)

- All contractors and subcontractors must submit the Section 3 Certification and Existing Workforce Form.
  - The Section 3 Resident Self-Certification form must be provided for all applicable persons

Upon project completion

- All contractors and subcontractors must submit the Section 3 New Hire Certification.
  - The Section 3 Resident Self-Certification form must be provided for all applicable persons

Attachment: Holly Hill LS_13 Rehabilitation_Bid Set Specifications_04.30.19 (2019-R-38 : Lift Station #13 Rehabilitation)

Volusia County
FLORIDA

County of Volusia
Community Assistance
110 W. Rich Avenue
DeLand, FL 32720

EQUAL HOUSING OPPORTUNITY

Section 3 Certification and Existing Workforce

The purpose of Section 3 is to ensure that employment and other economic opportunities generated by certain federally assisted projects shall, to the greatest extent feasible, and consistent with existing Federal, State and County rules and regulations, be directed to low- and very low-income persons, particularly those receiving housing assistance and to businesses that provide economic opportunities to these persons.

Any bid/proposal response for certain federally assisted projects that do not include this completed document will be considered non-responsive and not eligible for award.

Project Name: _____

Agency Name: _____

Contact person: _____ Title: _____

Address of business: _____

Telephone number: _____ Fax number: _____

E-mail address: _____

Federal Employer Identification Number/SSN: _____

1. Type of business:

(Check one) ☐ Corporation ☐ Sole Proprietorship ☐ Partnership ☐ Joint Venture

2. Check where applicable and provide required documentation:

☐ The business is **NOT** claiming a Section 3 status.

☐ The business **IS** claiming a Section 3 status based on the following:

- ☐ 51% of the business is owned by Section 3 qualified resident(s); see attached Section 3 Resident form(s)
- ☐ 30% or more of current full-time workforce qualify as section 3 residents, or did within three years of their first date of employment with the business; see attached Section 3 Resident form(s) and list of all employees
- ☐ More than 25% of the dollar award will be awarded to other qualified Section 3 businesses; see attached list of sub-contractors

3. Existing Workforce:

Attach to this form a list of existing agency employees that may work on this project. Please indicate which method of submittal is being used: ☐ Agency made employee list (or) ☐ "Existing Workforce List"

Regardless of the method, the submitted list must include the following information:

Employee Name
Employee Identification Number
Employee Wage Classification Type (title best suited to position from applicable wage determination)
Employee Phone Number
Employee Mailing Address; including city, state and zip code
Employee Section 3 status. (If claiming a Section 3 resident self-certification form is required)

I certify to the best of my knowledge that the information contained here within is true and correct.

Print name: _____

Signature: _____ Date: _____

Title: _____

NOTE: Volusia County shall maintain this form and supporting documentation a minimum of five years in the project files for review during monitoring. The contractor must retain a copy of the reports in their files for a minimum of five years after completion of the project.

Attachment: Holly Hill LS_13 Rehabilitation_Bid Set Specifications_04.30.19 (2019-R-38 : Lift Station #13 Rehabilitation)

Existing Workforce List

Project Name: _____

Agency Name: _____

The following is a list of existing agency employees that may work on this project. The list must include the following:

- Employee Name
- Employee Identification Number (e.g. last four digits of Social Security number)
- Employee Wage Classification Type (title best suited to position from applicable wage determination)
- Employee Phone Number
- Employee Mailing Address; including city, state and zip code
- Employee Section 3 status. (If claiming a Section 3 resident self-certification form is required)

Employee Name	ID #	Wage Classification	Phone Number	Mailing Address	Claimi Sectio status

Attachment: Holly Hill LS_13 Rehabilitation_Bid Set Specifications_04.30.19 (2019-R-38 : Lift Station #13

County of Volusia
Community Assistance
110 W. Rich Avenue
DeLand, FL 32720

EQUAL HOUSING OPPORTUNITY

Section 3 Resident Self-Certification

The purpose of Section 3 is to ensure that employment and other economic opportunities generated by certain HUD funded projects shall, to the greatest extent feasible, and consistent with existing Federal, State and County rules and regulations, be directed to low- and very low-income persons, particularly those receiving housing assistance and to businesses that provide economic opportunities to these persons.

A Section 3 Resident seeking training and employment opportunities provided by this part shall certify, and submit evidence to the recipient contractor or subcontractor, if requested, that the person is a Section 3 Resident, as defined in Section 135.5.

I,_____, (Print Name) am a legal resident the United States and of Volusia County, Florida and meet the income eligibility and federal guidelines for a Section 3 Resident. I am self-certifying as a Section 3 Resident because of the following reason(s):

- ☐ I am a public housing resident leaseholder – Submit copy of lease
- ☐ I live in public housing but am not on the lease – Submit copy of lease
- ☐ I am a Section 8 voucher holder – Submit copy of voucher
- ☐ My household income does not exceed the income guidelines by family size as published at the bottom of this form – Submit copy of most recent tax return or evidence of participation in a public assistance program

NOTE: Documentation of Section 3 Resident status must be submitted with this form

Name _____ Telephone _____

Home Address _____ (will be verified)
Must be Street Address - Not a P.O. Box Number)

Please check the income below that applies to your household:

FY 2018 Income Limits Summary		
Family Size	**Low Income**	**Very-Low Income**
1	☐ $31,200	☐ $19,500
2	☐ $35,650	☐ $22,300
3	☐ $40,100	☐ $25,100
4	☐ $44,550	☐ $27,850
5	☐ $48,150	☐ $30,100
6	☐ $51,700	☐ $32,350

I hereby certify that the information provided by me to be true and correct. If found to be inaccurate, I understand that I may be disqualified as an applicant and/or a certified Section 3 Resident which may be grounds for termination of training, employment, or contracts that resulted from this certification and could subject me to punishment under the law.

Print Name _____

Signature _____ Date _____

Attachment: Holly Hill LS_13 Rehabilitation_Bid Set Specifications_04.30.19 (2019-R-38 : Lift Station #13 Rehabilitation)

County of Volusia
Community Assistance
110 W. Rich Avenue
DeLand, FL 32720

EQUAL HOUSING OPPORTUNITY

Section 3 New Hire Certification

The purpose of Section 3 is to ensure that employment and other economic opportunities generated by certain HUD funded projects shall, to the greatest extent feasible, and consistent with existing Federal, State and County rules and regulations, be directed to low- and very low-income persons, particularly those receiving housing assistance and to businesses that provide economic opportunities to these persons.

All project contractors and subcontractors must complete this form upon project conclusion.

Project Name: _____

Agency Name: _____

Reporting Period: From: _____ To: _____

1. Have you hired any new employees who worked on the above mentioned project since the existing workforce list was submitted? ☐ Yes ☐ No
   (Note: this includes new employees hired specifically for this project or otherwise)

2. New Hires:
   Attach to this form a list of employees that have been hired and worked on this project since the existing workforce list was submitted. Please indicate which method of submittal is being used:
   ☐ Agency made employee list (or) ☐ "New Hire List"
   Regardless of the method, the submitted list must include the following information:
   - Employee Name
   - Employee Identification Number
   - Employee Wage Classification Type (title best suited to position from applicable wage determination)
   - Employee Phone Number
   - Employee Mailing Address; including city, state and zip code
   - Employee Section 3 status (If claiming this status, a Section 3 resident self-certification form is also required)

3. Did you recruit employees for this project? ☐ Yes ☐ No
   a. If yes, please check any of the following method(s) used to recruit new employees who live within Volusia County and meet the Section 3 criteria:

☐ Advertised to fill vacancies in a local newspaper
☐ Posted vacancies prominently at the job site
☐ Placed signs and/or posters announcing vacancies at the local public housing authorities in Volusia County
☐ Distributed employment flyers in various locations within Volusia County
☐ Posted employment flyers in various locations within Volusia County
☐ Kept a log of all applicants and for every position created by this project
☐ Retained copies of employment applications completed by Section 3 residents
☐ Other – Please provide details: _____

_____

I certify to the best of my knowledge that the information contained here within is true and correct.

Print name: _____

Signature: _____ Date: _____

Title: _____

NOTE: Volusia County shall maintain this form and supporting documentation a minimum of five years in the project files for review during monitoring. The contractor must retain a copy of the reports in their files for a minimum of five years after completion of the project.

Attachment: Holly Hill LS_13 Rehabilitation_Bid Set Specifications_04.30.19 (2019-R-38 : Lift Station #13 Rehabilitation)

New Hire List

Project Name: _____

Agency Name: _____

The following is a list of existing agency employees that may work on this project. The list must include the following:

- Employee Name
- Employee Identification Number (e.g. last four digits of Social Security number)
- Employee Wage Classification Type (title best suited to position from applicable wage determination)
- Employee Phone Number
- Employee Mailing Address; including city, state and zip code
- Employee Section 3 status. (If claiming a Section 3 resident self-certification form is required)

Employee Name	ID #	Wage Classification	Phone Number	Mailing Address	Claiming Section 3 status?

Attachment: Holly Hill LS_13 Rehabilitation_Bid Set Specifications_04.30.19 (2019-R-38 : Lift Station #13

24 CFR PART 85.36 Administrative Requirements for Grants and Cooperative Agreements to State, Local and Federally Recognized Indian Tribal Governments

https://www.hud.gov/sites/documents/24CFR85-36PROC.PDF

Compliance with the following bonding requirements is mandatory.

Proof of bonding will be verified prior to issuance of the notice to proceed.

(h) Bonding requirements.

For construction or facility improvement contracts or subcontracts exceeding the simplified acquisition threshold, the awarding agency may accept the bonding policy and requirements of the grantee or sub grantee provided the awarding agency has made a determination that the awarding agency's interest is adequately protected. If such a determination has not been made, the minimum requirements shall be as follows:

(1) A bid guarantee from each bidder equivalent to five percent of the bid price. The bid guarantee shall consist of a firm commitment such as a bid bond, certified check, or other negotiable instrument accompanying a bid as assurance that the bidder will, upon acceptance of his bid, execute such contractual documents as may be required within the time specified.

(2) A performance bond on the part of the contractor for 100 percent of the contract price. A performance bond is one executed in connection with a contract to secure fulfillment of all the contractor's obligations under such contract.

(3) A payment bond on the part of the contractor for 100 percent of the contract price. A payment bond is one executed in connection with a contract to assure payment as required by law of all persons supplying labor and material in the execution of the work provided for in the contract.

Attachment: Holly Hill LS_13 Rehabilitation_Bid Set Specifications_04.30.19 (2019-R-38 : Lift Station #13 Rehabilitation)

SECTION 01 37 00
SCHEDULE OF VALUES

PART 1 - GENERAL

1.01 DESCRIPTION

A. Scope of Work:

1. Submit to the Engineer a Schedule of Values allocated to the various lump sum portions of the Work, at the Pre-Construction Conference, and as otherwise specified or requested to be submitted earlier as evidence of the Apparent Low Bidder's qualifications.

2. Upon request of the Engineer support the values with data which will substantiate their correctness. The data shall include, but not be limited to quantity of materials, all sub-elements of the activity, and their units of measure.

3. The Schedule of Values shall establish the actual value for each activity of the Work to be completed taken from the approved Critical Path Method (CPM) Construction Schedule and shall be used as the basis for the Contractor's Applications for Payment.

B. Related Requirements Described Elsewhere:

1. Conditions of the Construction Contract.

1.02 FORM AND CONTENT OF SCHEDULE OF VALUES

A. Type schedule on 8-1/2 inch x 11 inch white paper. Contractor's standard forms and computer printouts may be considered for approval by the Engineer upon Contractor's request. Identify schedule with:

1. Title of project and location.
2. Owner and purchase order number.
3. Engineer and project number.
4. Name and address of Contractor.
5. Contract designation.
6. Date of submission.

B. Schedule shall list the installed value of the component parts of the Work in sufficient detail to serve as a basis for computing item prices for progress payments during construction.

Attachment: Holly Hill LS_13 Rehabilitation_Bid Set Specifications_04.30.19 (2019-R-38 : Lift Station #13 Rehabilitation)

C. Identify each line item with the number and the title of the respective section of the Specifications.

D. For each major item of the Work, list sub-values of major products or operations under the major item.

E. For the various portions of the Work:

1. The amount for each item shall reflect a total installed cost including a directly proportional amount of the Contractor's overhead and profit.

2. For items on which progress payments will be requested for stored materials, break down the value into:

a. The cost of the materials, delivered and unloaded, with taxes paid. Paid invoices are required for materials. Payment for materials shall be limited to the invoiced amount only.

b. The total installed value.

F. Round off figures to nearest dollar amount.

G. The sum of the costs of all items listed in the schedule shall equal the total Contract Price.

H. For each item which has an installed value of more than $15,000, provide a breakdown of costs to list major products or operations under each item.

I. The form of the Schedule of Values shall parallel the form presented in Section 00 84 50: Schedule of Values.

1.03 SUB-SCHEDULE OF UNIT MATERIAL VALUES

A. Submit a separate schedule of unit prices for materials to be stored on site and for those materials incorporated into the Work for which progress payments will be requested.

B. Format shall parallel that shown in Section 00 84 60: Materials Stored On Site Form and Section 00 84 50: Schedule of Values.

C. The unit values for the materials shall be broken down into:

1. Cost of the material, delivered and unloaded at the site, with taxes paid.

2. Copies of paid invoices for component material shall be included with the payment request in which the material first appears.

Attachment: Holly Hill LS_13 Rehabilitation_Bid Set Specifications_04.30.19 (2019-R-38 : Lift Station #13 Rehabilitation)

D. Only materials unique to the project may be billed when stored on site. Materials of standard use such as conduit, wire, small-diameter pipe, steel, etc., shall not be accepted for payment.

E. The installed unit value multiplied by the quantity listed shall equal the cost of that item in the Schedule of Values.

1.04 REVIEW AND RESUBMITTAL

A. After review by Engineer, revise and resubmit Schedule of Values and Schedule of Unit Material Values as required.

B. Resubmit revised schedules in same manner.

PART 2 - PRODUCTS (NOT USED)

PART 3 - EXECUTION (NOT USED)

END OF SECTION

Attachment: Holly Hill LS_13 Rehabilitation_Bid Set Specifications_04.30.19 (2019-R-38 : Lift Station #13 Rehabilitation)

SECTION 01 42 00

REFERENCES

PART 1 – GENERAL

1.01 GENERAL

A. Applicable Publications. Whenever in these Specifications references are made to published specifications, codes, standards, or other requirements, it shall be understood that wherever no date is specified, only the latest specifications, standards, or requirements of the respective issuing agencies which have been published as of the date that the Work is advertised for bids, shall apply; except to the extent that said standards or requirements may be in conflict with applicable laws, ordinances, or governing codes. No requirements set forth herein or shown on the Drawings shall be waived because of any provision of or omission from said standards or requirements.

B. Assignment of Specialists. In certain instances, specification test requires (or implies) that specific work is to be assigned to specialist or expert entities who must be engaged for the performance of the Work. Such assignments shall be recognized as special requirements over which the CONTRACTOR has no choice or option. These requirements shall not be interpreted so as to conflict with the enforcement of building codes and similar regulations governing the Work. They are not intended to interfere with local union jurisdiction settlements and similar conventions. Such assignments are intended to establish which party or entity involved in a specific unit of Work is recognized as "expert" for the indicated construction processes or operations. Nevertheless, the final responsibility for fulfillment of the entire set of Contract requirements remains with the CONTRACTOR.

1.02 REFERENCE SPECIFICATIONS, CODES, AND STANDARDS

A. Without limiting the generality of other requirements of the Specifications, all Work specified herein shall conform to or exceed the requirements of such referenced documents which are not in conflict with the requirements of these Specifications or applicable codes.

B. References herein to "Building Code" shall mean the latest edition of the Florida Building Code. The latest edition of the code as approved and used by the local agency as of the date of award as adopted by the agency having jurisdiction shall apply to the Work herein, including all addenda, modifications, amendments, or other lawful changes thereto.

Attachment: Holly Hill LS_13 Rehabilitation_Bid Set Specifications_04.30.19 (2019-R-38 : Lift Station #13 Rehabilitation)

C. In case of conflict between codes, reference standards, Drawings, and the other Contract Documents, the most stringent requirements shall govern. All conflicts shall be brought to the attention of the ENGINEER for clarification and directions prior to ordering or providing any materials or labor. The CONTRACTOR shall bid the most stringent requirements.

D. Applicable Standard Specifications. The CONTRACTOR shall construct the Work specified herein in accordance with the requirements of the Contract Documents and the referenced portions of those referenced codes, standards, and specifications listed.

PART 2 – PRODUCTS (NOT USED)

PART 3 – EXECUTION (NOT USED)

END OF SECTION

Attachment: Holly Hill LS_13 Rehabilitation_Bid Set Specifications_04.30.19 (2019-R-38 : Lift Station #13 Rehabilitation)

SECTION 01 45 35

TESTING AND TESTING LABORATORY SERVICES

PART 1 – GENERAL

1.01 DESCRIPTION

A. Scope of Work:

1. Contractor will employ, and pay for services of an independent testing laboratory to perform testing specifically indicated on the Contract Documents or specified in the Specifications herein and may at any other time elect to have materials and equipment tested for conformity with the Contract Documents.

2. Contractor shall cooperate with the laboratory to facilitate the execution of its required services.

3. Contractor shall provide engineer with all test results as indicated herein within five (5) days of receipt.

B. Related Requirements Described Elsewhere:

1. Testing laboratory inspection, sampling and testing is required for, but not limited to the following:

a. Excavation, Backfill, and Embankment: Section 31 23 00.
b. Trenching, Backfilling, and Compacting: Section 31 23 33.
c. Cast-in-Place Concrete: Section 03 30 00.

C. The following schedule defines the responsibility for various tests.

Attachment: Holly Hill LS_13 Rehabilitation_Bid Set Specifications_04.30.19 (2019-R-38 : Lift Station #13 Rehabilitation)

Test	Notes	Paid for By
Soil Compaction	Pipe Work: Every 300 feet (300') at each lift of compaction minimum. Beneath Structures: Each 500 SF lift of compaction minimum and each lift around structures.	Contractor
Pressure	As specified in Section 46 05 03	Contractor
Bacteriological	As required by local and state agencies	Contractor
LBR	Each 1500 SF of pavement (minimum)	Contractor
Concrete	Slump test each delivery and compressions test five (5) cylinders every 50 CY (minimum)	Contractor

D. Additional Tests: The Contractor shall pay for first tests as specified herein. In the event that first test samples do not meet the applicable material specification, the Contractor shall take measures to conform the material and equipment to the Specifications. All subsequent tests shall be paid for by the Contractor.

1.02 LABORATORY TESTS

A. The materials listed below shall require advance and periodic laboratory tests as indicated and shall be sampled in accordance with the methods of the ASTM and as directed by the Engineer. With the exception of concrete test cylinders and mixing water, duplicate advance samples of all materials requiring laboratory tests shall be submitted to the Engineer, one of which will be certified by the Engineer for submission to the testing laboratory and the other retained on the job site in suitable storage provided by the Contractor. Except as noted below, preliminary samples of materials for advance laboratory tests shall be submitted at least two (2) weeks prior to starting delivery of such materials to the site of the project. The testing laboratory shall furnish both the Engineer and the Contractor with two (2) copies of the reports showing the results of such tests, and the reports shall be considered as sufficient evidence of the acceptance or rejection of the quality of the materials tested. The specifications for, and the method of testing, will be found under the detailed specifications for the particular material involved. All samples shall be properly packed and clearly marked as to source and intended use.

Attachment: Holly Hill LS_13 Rehabilitation_Bid Set Specifications_04.30.19 (2019-R-38 : Lift Station #13 Rehabilitation)

MATERIALS	TEST FREQUENCY	SAMPLE SIZE	SHIPPING CONTAINER
Fine Aggregate	Advance, first shipment then each 100 tons	100 lbs.	Canvas Sack
Coarse Aggregate	Advance, first shipment then each 200 tons	Stone or Gravel 200 lbs.	Strong Sack
Concrete	Advance test using approved materials	Four (4) cylinders per mix, two (2) broken at seven (7) days, two (2) at 28 days	
Concrete (b) Air Entrainment	Advance test on trial mix air entraining agent is used. Test as specified under Article 405 (e)		

1.03 TESTS

A. The materials listed below shall be tested at the shop or plant of, and by, the producer. Each manufacturer of such materials shall be fully equipped to carry out the tests herein designated. Upon demand of the Engineer, the manufacturer shall perform such additional number of tests as the Engineer may deem necessary to establish the quality of the material offered for use. The Engineer shall be furnished with the certified records of reports of the results of all tests, such reports of records to contain a sworn statement that the tests have been made as specified.

MATERIAL	TEST METHOD
Cement	ASTM C 114
Ductile Iron Pipe (Centrifugally Cast)	As required under ANSI A21.51-1176
Brick	ASTM C 32
Reinforcement	ASTM A 15 & A 305

Attachment: Holly Hill LS_13 Rehabilitation_Bid Set Specifications_04.30.19 (2019-R-38 : Lift Station #13 Rehabilitation)

1.04 FIELD TESTS

A. All sewers, water lines, piping and equipment shall be tested in the field in the presence of the Engineer or his authorized assistant, in the manner prescribed in the sections of these specifications pertaining to such installations. The Engineer may also perform or have performed any other field tests necessary to determine compliance with the Contract requirements. The Contractor shall furnish all necessary labor, equipment, and materials for such tests and, with the exception of the Engineer's expenses, shall bear all the cost thereof.

1.05 PAVING TESTS

A. The following tests will be made, unless otherwise stipulated by the Engineer, by a testing laboratory approved by the Engineer.

Material	Test or Test Method	Frequency
Subbase	1) AASHO T-180 [Modified Proctor Minimum 98 percent (98%) Density]	Every 300 LF
	2) Limerock Bearing Ratio 40	Every 300 LF
Base	(Soil Cement)	
	(1) Mix Design 350 psi @ 28 days. Mix design required seven (7) days in advance.	Prior to Mixing Base
	(2) Optimum Moisture content and Maximum Density (AASHTO T-134)	Every 300 LF
	(3) LBR 100	Every 1500 SF
	(4) Depth [six inch (6") minimum]	Every 300 feet (300')
Paving	(1) Job Mix Formula. Required seven (7) days in advance and submit to Engineer	Each Job
	(2) Bitumen Content of Mix	Every 2500 SY or fraction thereof
	(3) In Place Density	Every 300 feet (300') (left, right & center)
	(4) Marshall Field Stability Index	Every 1500 SY or fraction thereof
	(5) Thickness Cores	Every 300 feet (300') (left, right & center)

Attachment: Holly Hill LS_13 Rehabilitation_Bid Set Specifications_04.30.19 (2019-R-38 : Lift Station #13 Rehabilitation)

1.06 BASIS OF PAYMENT

A. All shop tests and mill inspection shall be included in the price of the manufactured article, and no separate or extra payment will be made for such tests and inspection.

B. All laboratory and field tests will be paid for by the Contractor; he shall furnish all necessary labor, equipment, and materials for such tests and, with the exception of the Engineer's expenses, shall bear all the costs thereof.

1.07 LABORATORY DUTIES: LIMITATIONS OF AUTHORITY

A. Cooperate with Engineer and Contractor; provide qualified personnel promptly on notice.

B. Perform specified inspections, sampling and testing of materials and methods of construction:

1. Comply with specific standards; ASTM, other recognized authorities, and as specified.

2. Determine and report on compliance with requirements of Contract Documents.

C. Promptly notify the Engineer and Contractor of material or operations which do not meet the specifications.

D. Promptly submit five (5) copies of reports of inspections and tests to the Engineer including:

1. Date issued.

2. Project title and Engineer's job number.

3. Testing Laboratory name and address.

4. Name and signature of inspector.

5. Date of inspection of inspector.

6. Date of inspection or sampling.

7. Date of test.

8. Identification of product and Specification section.

9. Location in project.

Attachment: Holly Hill LS_13 Rehabilitation_Bid Set Specifications_04.30.19 (2019-R-38 : Lift Station #13 Rehabilitation)

10. Type of inspection or test.

11. Compliance with Contract Documents or not.

E. Laboratory is not authorized to:

1. Release, revoke, alter, or enlarge on requirements of Contract Documents.

2. Approve or reject any portion of work.

3. Perform any duties of the Contractor.

1.08 CONTRACTOR'S RESPONSIBILITIES

A. Cooperate with laboratory personnel; provide access to Work and manufacture's operations.

B. Secure and deliver to the laboratory adequate representational samples of materials purposed to be used and which require testing.

C. Provide to the laboratory the preliminary design mix proposed to be for concrete, and other materials mixes which require control by the testing laboratory.

D. Materials and equipment used in the performance of work under this Contract are subject to inspection and testing at the point of manufacturer of fabrication. Standard specifications for quality and workmanship are indicated in the Contract Documents. The Engineer may require the Contractor to provide statements or certificates from the manufacturers and fabricators that in full accordance with the standard specifications for quality and workmanship indicated in the Contract Documents. All costs of this testing and providing statements and certificates shall be a subsidiary obligation of the Contractor, and no extra charge to the Owner shall be allowed on account of such testing and certification.

E. Furnish incidental labor and facilities:

1. To provide access to Work to be tested.

2. To obtain and handle samples at the Project site or at the source of the product to be tested.

3. To facilitate inspections and tests.

4. For storage and curing of test samples.

Attachment: Holly Hill LS_13 Rehabilitation_Bid Set Specifications_04.30.19 (2019-R-38 : Lift Station #13 Rehabilitation)

5. Notify laboratory sufficiently in advance of operations to allow for laboratory assignment of personnel and scheduling of tests.

PART 2 – PRODUCTS (NOT USED)

PART 3 – EXECUTION (NOT USED)

END OF SECTION

Attachment: Holly Hill LS_13 Rehabilitation_Bid Set Specifications_04.30.19 (2019-R-38 : Lift Station #13 Rehabilitation)

SECTION 01 57 13

TEMPORARY EROSION AND SEDIMENTATION CONTROL

PART 1 – GENERAL

1.01 DESCRIPTION

A. Scope of Work:

1. The Work specified in this Section consists of designing, providing, maintaining, and removing temporary erosion and sedimentation controls as required by Rules and Regulations and permit conditions.

2. Temporary erosion controls include, but are not limited to, grassing, mulching, setting, watering and re-seeding on-site surfaces and soil and borrow area surfaces and providing interceptor ditches at ends of berms and at those locations which will ensure that erosion during construction will be either eliminated or maintained within acceptable limits as established by the OWNER.

3. Temporary sedimentation controls include, but are not limited to silt dams, traps, barriers, and appurtenances at the foot of sloped surfaces which will ensure that sedimentation pollution will be either eliminated or maintained within acceptable limits as established by the OWNER.

4. CONTRACTOR is responsible for providing effective temporary erosion and sediment control measures during construction or until final controls become effective.

B. Related Work Described Elsewhere:

1. Excavation, Backfill, and Embankment: Section 31 23 00.

PART 2 – PRODUCTS

2.01 EROSION CONTROL

A. Sodding is specified in Section 31 23 00.

B. Netting shall be fabricated of material acceptable to the OWNER.

Attachment: Holly Hill LS_13 Rehabilitation_Bid Set Specifications_04.30.19 (2019-R-38 : Lift Station #13 Rehabilitation)

2.02 SEDIMENTATION CONTROL

A. Bales shall be clean, seed-free cereal hay type.

B. Netting shall be fabricated of material acceptable to the OWNER.

C. Filter stone shall be crushed stone which conforms to Florida Department of Transportation (FDOT) specifications.

D. Concrete block shall be hollow, non-load bearing type.

E. Concrete shall be exterior grade not less than one inch (1") thick.

PART 3 – EXECUTION

3.01 EROSION CONTROL

A. Minimum procedures for grassing are:

1. Scarify slopes to a depth of not less than six inches (6") and remove large clods, rock, stumps, roots larger than one-half inch (1/2") in diameter and debris.

2. Sow seed within 24 hours after the ground is scarified with either mechanical seed drills or rotary hand seeders.

3. Apply mulch loosely and to a thickness of between three-quarter inches (3/4") and one and one-half inches (1-1/2").

4. Apply netting over mulched areas on sloped surfaces.

5. Roll and water seeded areas in a manner which will encourage sprouting of seeds and growing of grass. Reseed areas which exhibit unsatisfactory growth. Backfill and seed eroded areas.

3.02 SEDIMENTATION CONTROL

A. Install and maintain silt dams, traps, barriers, and appurtenances as shown on the approved descriptions and working drawings. Hay bales which deteriorate and filter stone which is dislodged shall be replaced.

3.03 PERFORMANCE

A. Should any of the temporary erosion and sediment control measures employed by the CONTRACTOR fail to produce results which comply with the requirements of the State of Florida, the OWNER or ENGINEER, the CONTRACTOR shall immediately take whatever steps are necessary to correct the deficiency at his own expense.

END OF SECTION

Attachment: Holly Hill LS_13 Rehabilitation_Bid Set Specifications_04.30.19 (2019-R-38 : Lift Station #13 Rehabilitation)

SECTION 01 60 00

MATERIAL AND EQUIPMENT

PART 1 – GENERAL

1.01 DESCRIPTION

A. Scope of Work:

1. Conform to applicable specifications and standards.

2. Comply with size, make, type and quality specified, or as specifically approved in writing by ENGINEER.

3. Manufactured and fabricated products:

a. Design, fabricate and assemble in accordance with the best engineering and shop practices.
b. Manufacture like parts of duplicate units to standard sizes and gauges, to be interchangeable.
c. Two (2) or more items of the same kind shall be identical, by the same manufacturer.
d. Products shall be suitable for service conditions.
e. Equipment capacities, sizes and dimensions shown or specified shall be adhered to unless variations are specifically approved in writing.

4. Do not use material or equipment for any purpose other than that for which it is designed or is specified.

1.02 APPROVAL OF MATERIALS

A. Only new materials and equipment shall be incorporated in the work. All materials and equipment furnished by CONTRACTOR shall be subject to the inspection and approval of ENGINEER. No material shall be delivered to the work without prior approval of ENGINEER.

B. Within 20 days after the Effective Date of the Agreement, CONTRACTOR shall submit to ENGINEER, data relating to materials and equipment he proposes to furnish for the work. Such data shall be in sufficient detail to enable ENGINEER to identify the particular product to form an opinion as to its conformity to the specifications.

C. Facilities and labor for handling and inspection of all materials and equipment shall be furnished by CONTRACTOR. If ENGINEER requires, either prior to beginning

Attachment: Holly Hill LS_13 Rehabilitation_Bid Set Specifications_04.30.19 (2019-R-38 : Lift Station #13 Rehabilitation)

or during progress of the work, CONTRACTOR shall submit samples of materials for such special tests as may be necessary to demonstrate that they conform to the specifications. Such samples shall be furnished, stored, packed and shipped as directed at CONTRACTOR's expense. Except as otherwise noted, CONTRACTOR shall make arrangements for and pay for the tests.

D. CONTRACTOR shall submit data and samples sufficiently early to permit consideration and approval before materials are necessary for incorporation in the work. Any delay of approval resulting from CONTRACTOR's failure to submit samples or data promptly shall not be used as a basis of claim against OWNER or ENGINEER.

E. In order to demonstrate the proficiency of workers or to facilitate the choice among several textures, types, finishes and surfaces, CONTRACTOR shall provide such samples of workmanship or finish as may be required.

F. The materials and equipment used on the work shall correspond to the approved samples or other data.

1.03 SUBSTITUTIONS AND PRODUCT OPTIONS

A. The substitution requirements of this Section are in addition to the requirements of the General Conditions and Supplementary Conditions.

B. The intent of these Specifications is to provide OWNER with a quality facility without discouraging competitive bidding. Substitutions may be submitted and will be evaluated as specified herein.

C. A Request for Substitution of Product may be submitted after the CONTRACTOR:

1. Has investigated the proposed product and determined that it is equal to or superior to specified product, furnishes a certification to that effect and waives all rights to additional payment or time that may subsequently become necessary due to the failure of the substituted product to perform adequately.

2. Agrees to provide same warranties or bonds for product substitution as for product specified.

3. Agrees to be responsible for coordinating and paying for any necessary changes to other work required by approved substitutions or product options which he selects and shall pay all such costs including the costs of the services of the design professional to revise the Contract Documents, if such revisions are required.

4. Waives all claims for additional costs due to substitution which may subsequently become apparent.

Attachment: Holly Hill LS_13 Rehabilitation_Bid Set Specifications_04.30.19 (2019-R-38 : Lift Station #13 Rehabilitation)

5. Is offering either a substantial credit to the OWNER for acceptance of the substitution or a convincing justification that the product to be provided as the substitution is substantially superior in quality, performance, compatibility with adjacent products, durability, vandal-resistance or in other important ways.

D. ENGINEER's Action:

1. ENGINEER will consider written requests for product substitution for a period of 45 calendar days after the effective date of the Agreement. ENGINEER will review requests for substitutions with reasonable promptness and notify CONTRACTOR in writing of OWNER's decision to accept or reject requested substitutions. Only the OWNER may accept a substitution.

2. Substitution requests made by means of shop drawings or product data submittal will not be considered.

3. After the period of 45 days has elapsed, the only substitution requests which will be considered are those which are made necessary by the removal of the specified products from the market or by other similar, unavoidable circumstances beyond the control of the CONTRACTOR.

1.04 MANUFACTURER'S INSTRUCTIONS FOR INSTALLATION

A. When Contract Documents require that installation of work shall comply with manufacturer's printed instructions, obtain, and distribute copies of such instructions to parties involved in the installation, including five copies to ENGINEER.

1. Maintain one (1) set of complete instructions at the job site during installation and until completion.

B. Handle, install, correct, clean, condition and adjust products in strict accord with such instructions and in conformity with specified requirements.

1. Should job conditions or specified requirements conflict with manufacturer's instructions, consult with ENGINEER for further instructions.

2. Do not proceed with work without clear instructions.

C. Perform work in accordance with manufacturer's instructions. Do not omit nay preparatory step or installation procedure unless specifically modified or exempted by Contract Documents.

Attachment: Holly Hill LS_13 Rehabilitation_Bid Set Specifications_04.30.19 (2019-R-38 : Lift Station #13 Rehabilitation)

1.05 TRANSPORTATION AND HANDLING

A. Arrange deliveries of products in accordance with construction schedules, coordinate to avoid conflict with work and conditions at the site.

1. Deliver products in undamaged condition, in manufacturer's original containers or packaging, with identifying labels intact and legible.

2. Immediately on delivery, inspect shipments to assure compliance with requirements of Contract Documents and approved submittals, and that products are properly protected and undamaged.

B. Provide equipment and personnel to handle products by methods to prevent soiling or damage to products or packaging.

1.06 STORAGE AND PROTECTION

A. The CONTRACTOR shall furnish a covered, weather-protected storage structure providing a clean, dry, noncorrosive environment for all mechanical equipment, valves, architectural items, electrical and instrumentation equipment, and special equipment to be incorporated into this project. Storage of equipment shall be in strict accordance with the "instructions for storage" of each equipment supplier and manufacturer including connection of heaters, placing of storage lubricants in equipment, etc. Corroded, damaged or deteriorated equipment and parts shall be replaced before acceptance of the project. Equipment and materials not properly stored will not be included in a payment estimate.

B. Store products in accordance with manufacturer's instructions, with seals and labels intact and legible.

1. Store products subject to damage by the elements in weathertight enclosures such as buildings or trailers which have a concrete or wooden floor, a roof, and fully closed walls on all sides.

2. Maintain temperature and humidity within the ranges required by manufacturer's instructions (i.e. electrical and instrumentation equipment).

3. Protect mechanical and electrical equipment from being contaminated by dust, dirt, and moisture.

4. Store fabricated products above the ground, on blocking or skids prevent soiling and staining. Cover products which are subject to deterioration with impervious sheet coverings, provided adequate ventilation to avoid condensation.

Attachment: Holly Hill LS_13 Rehabilitation_Bid Set Specifications_04.30.19 (2019-R-38 : Lift Station #13 Rehabilitation)

5. Provide heated storage space for material which would be damaged by freezing.

6. Store loose granular materials in a well-drained area on solid surfaces to prevent mixing with foreign matter.

7. Prior to the installation of equipment, it shall be stored at locations designated and approved by the ENGINEER.

C. All materials and equipment to be incorporated in the work shall be handled and stored by CONTRACTOR before, during and after shipment in a manner to prevent warping, twisting, bending, breaking, chipping, rusting, and any injury, theft, or damage of any kind whatsoever to the material or equipment.

D. Cement, sand, and lime shall be stored under a roof and off the ground and shall be kept completely dry at all times. All structural and miscellaneous steel, and reinforcing steel shall be stored of off the ground or otherwise to prevent accumulations of dirt or grease, and in a position to prevent accumulations of standing water and to minimize rusting. Beams shall be stored with the webs vertical. Precast concrete beams shall be handled and stored in a manner to prevent accumulations of dirt, standing water, staining, chipping or cracking. Brick, block, and similar masonry products shall be handled and stored in a manner to reduce breakage, chipping, cracking and spalling to a minimum.

E. All materials which, in the opinion of ENGINEER, have become so damaged as to be unfit for the use intended or specified shall be promptly removed from the site of the work, and CONTRACTOR shall receive no compensation for the damaged material or its removal.

F. Arrange storage in a manner to provide easy access for inspection. Make periodic inspections of stored materials and equipment to assure that products are maintained under specified conditions, and free from damage or deterioration.

G. Protection After Installation: Provide substantial coverings as necessary to protect installed products from damage from traffic and subsequent construction operations. Remove covering when no longer needed.

H. The CONTRACTOR shall be responsible for all material, equipment, and supplies delivered to OWNER under this Contract until final inspection of the work and acceptance thereof by OWNER. In the event, any such material, equipment and supplies are lost, stolen, damaged or destroyed prior to final inspection and acceptance, CONTRACTOR shall replace same without additional cost to OWNER.

Attachment: Holly Hill LS_13 Rehabilitation_Bid Set Specifications_04.30.19 (2019-R-38 : Lift Station #13 Rehabilitation)

I. Should CONTRACTOR fail to take proper action on storage and handling of equipment supplied under the Contract within seven (7) days after written notice to do so has been given. OWNER retains the right to correct all deficiencies noted in previously transmitted written notice and deduct the cost associated with these corrections from CONTRACTOR's Contract. These costs may be comprised of expenditures for labor, equipment usage, administrative, clerical, engineering and any other costs associated with making the necessary corrections.

1.07 SPECIAL TOOLS

A. Manufacturers of equipment and machinery shall furnish any special tools (including grease guns or other lubricating devices) required for normal adjustment, operations, and maintenance, together with instructions for their use. CONTRACTOR shall preserve and deliver to OWNER these tools and instructions in good order no later than upon completion of the Contract.

1.08 STORAGE AND HANDLING OF EQUIPMENT ON SITE.

A. Attention shall be given to the storage and handling of equipment on site. As a minimum, the procedure outlined below shall be followed:

1. Equipment shall not be shipped until approved by ENGINEER. The intent of this requirement is to reduce on-site storage time prior to installation and/or operation. Under no circumstances shall equipment be delivered to the site more than one month prior to installation without written authorization from ENGINEER. Equipment shipped to the site shall be stored in accordance with Paragraph 1.06, herein. Operation and maintenance data shall be submitted to ENGINEER for review prior to shipment of equipment.

2. All equipment having moving parts such as gears, electric motors, etc. and/or instruments shall be stored in a temperature and humidity controlled building approved by ENGINEER, until such time as the equipment is to be installed.

3. All equipment shall be stored fully lubricated with oil, grease, etc. unless otherwise instructed by the manufacturer.

4. Manufacturer's storage instructions shall be carefully studied by CONTRACTOR and reviewed with ENGINEER by him. These instructions shall be carefully followed and a written record of this kept by the CONTRACTOR.

5. Moving parts shall be rotated a minimum of once weekly to insure proper lubrication and to avoid metal-to-metal "welding". Upon installation of the equipment, CONTRACTOR shall start the equipment, at least half load, once weekly for an adequate period of time to ensure that the equipment does not deteriorate from lack of use.

Attachment: Holly Hill LS_13 Rehabilitation_Bid Set Specifications_04.30.19 (2019-R-38 : Lift Station #13 Rehabilitation)

6. Lubricants shall be changed upon completion of installation and as frequently as required thereafter during the period between installation and acceptance. Mechanical equipment to be used in the work, if stored for longer than 90 days, shall have the bearings cleaned, flushed and lubricated prior to testing and startup, at no extra cost to OWNER.

7. Prior to acceptance to the equipment, CONTRACTOR shall have the manufacturer inspect the equipment and certify that its condition has not been detrimentally affected by the long storage period. Such certifications by the manufacturer shall be deemed to mean that the equipment is judged by the manufacturer to be in a condition equal to that of equipment that has been shipped, installed, tested and accepted in a minimum time period. As such, the manufacturer will guarantee the equipment equally in both instances. If such a certification is not given, the equipment shall be judged to be defective. It shall be removed and replaced at CONTRACTOR's expense.

1.09 WARRANTY

A. For all major pieces of equipment, submit a warranty from the equipment manufacturer as specified. The manufacturer's warranty period shall be concurrent with the CONTRACTOR's for one (1) year after the time of acceptance.

1.10 SPARE PARTS

A. Spare parts for certain equipment have been specified in the pertinent sections of the Specifications. CONTRACTOR shall collect and store all spare parts so required in an area to be designated by ENGINEER. In addition, CONTRACTOR shall furnish ENGINEER an inventory listing all spare parts, the equipment they are associated with, the name and address of the supplier, and the delivered cost of each items. Spare parts shall be turned over in conjunction with the "Spare Parts List" as shown. Copies of actual invoices for each item shall be furnished with the inventory to substantiate the delivered cost.

1.11 GREASE, OIL, AND FUEL

A. All grease, oil and fuel required for testing of equipment shall be furnished with the respective equipment. OWNER shall be furnished with a year's supply of required lubricants including grease and oil of the type recommended by manufacturer with each item of equipment supplied.

B. CONTRACTOR shall be responsible for changing the oil in all drives and intermediate drives of each mechanical equipment after initial break-in of the equipment, which in no event shall be any longer than three (3) weeks of operation.

Attachment: Holly Hill LS_13 Rehabilitation_Bid Set Specifications_04.30.19 (2019-R-38 : Lift Station #13 Rehabilitation)

PART 2 – PRODUCTS (NOT USED)

PART 3 – EXECUTION (NOT USED)

END OF SECTION

Attachment: Holly Hill LS_13 Rehabilitation_Bid Set Specifications_04.30.19 (2019-R-38 : Lift Station #13 Rehabilitation)

SECTION 01 71 13

MOBILIZATION

PART 1 – GENERAL

1.01 DEFINITION AND SCOPE

A. Mobilization shall include the obtaining of all permits, insurance, and bonds; moving onto the site of all plant and equipment; furnishing and erecting plants, temporary buildings, and other construction facilities; all as required for the proper performance and completion of the Work. Mobilization shall include, but not be limited to, the following principal items.

1. Move onto the site all CONTRACTOR's plant and equipment required for first month operations.

2. Install temporary construction power, wiring, and lighting facilities.

3. Establish fire protection plan and safety program.

4. Secure construction water supply.

5. Provide field office trailers for CONTRACTOR and as may be specified for OWNER and ENGINEER.

6. Provide on-site sanitary facilities and potable water facilities as specified.

7. Arrange for and erect CONTRACTOR's work and storage yard and employee's parking facilities.

8. Submit all required insurance certificates and bonds.

9. Obtain all required permits.

10. Post all OSHA, EPA, Department of Labor, and all other required notices.

11. Have CONTRACTOR's superintendent at the job site full time.

12. Submit a detailed construction CPM schedule acceptable to the ENGINEER as specified.

Attachment: Holly Hill LS_13 Rehabilitation_Bid Set Specifications_04.30.19 (2019-R-38 : Lift Station #13 Rehabilitation)

13. Submit a schedule of values of the Work.

14. Submit a schedule of submittals.

1.02 DEMOBILIZATION

A. Demobilization is the timely and proper removal of all contractor owned material, equipment, or plant, from the job site and the proper restoration or completion of work necessary to bring the site into full compliance with the contract documents.

1.03 PAYMENT FOR MOBILIZATION/DEMOBILIZATION

A. The CONTRACTOR's attention is directed to the condition that no payment for mobilization, or any part thereof, will be approved for payment under the Contract. Mobilization/Demobilization is a subsidiary obligation of the CONTRACTOR.

PART 2 – PRODUCTS (NOT USED)

PART 3 – EXECUTION (NOT USED)

END OF SECTION

Attachment: Holly Hill LS_13 Rehabilitation_Bid Set Specifications_04.30.19 (2019-R-38 : Lift Station #13 Rehabilitation)

SECTION 01 74 00

CLEANING AND WASTE MANAGEMENT

PART 1 – GENERAL

1.01 DESCRIPTION

A. Scope of Work: Execute cleaning, during the progress of Work and at completion of the Work.

1.02 DISPOSAL REQUIREMENTS

A. Conduct cleaning and disposal operations to comply with codes, ordinances, regulations, and anti-pollution laws.

PART 2 – PRODUCTS

2.01 MATERIALS

A. Use only those cleaning materials which will not create hazards to health or property and which will not damage surfaces.

B. Use only those cleaning materials and methods recommended by manufacturer of the surface material to be cleaned.

C. Use cleaning materials only on surfaces recommended by cleaning material manufacturer.

PART 3 – EXECUTION

3.01 DURING CONSTRUCTION

A. Execute daily cleaning to keep the Work, the site, and adjacent properties free from accumulations of waste materials, rubbish, and windblown debris, resulting from construction operations or personal activities.

B. Provide on-site containers for the collection of waste materials, debris, and rubbish.

C. Remove waste materials, debris and rubbish from the site periodically, or as directed by the OWNER and dispose of at legal disposal areas away from the site.

Attachment: Holly Hill LS_13 Rehabilitation_Bid Set Specifications_04.30.19 (2019-R-38 : Lift Station #13 Rehabilitation)

3.02 DUST CONTROL

A. The CONTRACTOR shall employ construction techniques that minimize the production and distribution of dust.

B. Clean interior spaces prior to the start of finish painting and continue cleaning on an as-needed basis until painting is finished.

C. Schedule operations so that dust and other contaminants resulting from cleaning process will not fall on wet or newly-coated surfaces.

3.03 FINAL CLEANING

A. Employee skilled workman for final cleaning.

B. Remove grease, mastic, adhesives, dust, dirt, stains, fingerprints, labels, and other foreign materials from sight-exposed interior and exterior surfaces.

C. Prior to final completion, or OWNER occupancy, CONTRACTOR shall conduct an inspection of sight-exposed interior and exterior surfaces and all work areas, to verify that the entire Work site is clean.

END OF SECTION

Attachment: Holly Hill LS_13 Rehabilitation_Bid Set Specifications_04.30.19 (2019-R-38 : Lift Station #13 Rehabilitation)

SECTION 01 74 25

MISCELLANEOUS WORK AND CLEANUP

PART 1 – GENERAL

1.01 DESCRIPTION

A. Scope of Work:

1. This Section includes operations which cannot be specified in detail as separate items but can be sufficiently described as to the kind and extent to work involved. The CONTRACTOR shall furnish all labor, materials, equipment, and incidentals to complete the work under this Section.

2. The work of this Section includes, but is not limited to, the following:

a. Restoring of driveways and fences.
b. Cleaning up.
c. Incidental work.

PART 2 – PRODUCTS

2.01 MATERIALS

A. Materials required for this Section shall be of the same quality as materials that are to be restored. Where possible, the CONTRACTOR shall reuse existing materials that are removed and then replaced.

PART 3 – EXECUTION

3.01 RESTORING OF DRIVEWAYS, FENCES, AND SIDEWALKS

A. Existing public and private driveways and sidewalks disturbed by the CONTRACTOR shall be replaced. Paved drives shall be repaved to the limits and thickness existing prior to construction. Gravel drives shall be replaced and regraded. Concrete driveways and sidewalks shall be replaced.

B. The CONTRACTOR shall remove, store and replace existing fences during construction. Only the sections directed by the ENGINEER shall be removed. If any section of fence is damaged due to the CONTRACTOR's negligence, it shall be replaced with fencing equal to or better than that damaged, and the work shall be satisfactory to the ENGINEER.

Attachment: Holly Hill LS_13 Rehabilitation_Bid Set Specifications_04.30.19 (2019-R-38 : Lift Station #13 Rehabilitation)

3.02 CLEAN UP

A. The CONTRACTOR shall remove all construction material, buildings, equipment, and other debris remaining on the job as the result of construction operations and shall render the site of the work in a neat and orderly condition. All suitable excess excavated material shall remain on site.

3.03 INCIDENTAL WORK

A. Do all incidental work not otherwise specified, but obviously necessary for the proper completion of the contract as specified and as shown on the Drawings.

END OF SECTION

Attachment: Holly Hill LS_13 Rehabilitation_Bid Set Specifications_04.30.19 (2019-R-38 : Lift Station #13 Rehabilitation)

SECTION 01 75 16

START-UP PROCEDURES

PART 1 – GENERAL

1.01 DESCRIPTION

A. The Work may be segmented into several phases of construction in a logical order to meet the project schedule. Portions of the Work may be utilized prior to Substantial Completion of all the Work. Also, certain items of equipment are to be temporarily utilized in a phased segment of the Work and then relocated in a subsequent phase in a permanent installation.

PART 2 – PRODUCTS (NOT USED)

PART 3 – EXECUTION

3.01 PRELIMINARY MATTERS

A. Start-up Certification: Prior to start-up, successfully complete all testing required of the individual components of work in the presence of the Engineer or is representative.

B. Demonstrate to the Engineer that all temporary jumpers and/or bypass have been removed and that all components are operating under their own controls as designated.

C. Coordinate start-up activities with equipment suppliers, subcontractors, and the OWNER's operating personnel at the site and with the Engineer prior to commencing system start-up. All coordination is the responsibility of the CONTRACTOR.

3.02 START-UP

A. Confirm that all equipment is properly installed and that the flow path through the new work is unobstructed.

B. Make adjustments as necessary.

3.03 START-UP DEMONSTRATION AND TESTING

A. After all work components have been constructed, field tested, and started up in accordance with the individual specifications, perform the Start-Up Demonstration and Testing in the presence of the Engineer and the OWNER. The

Attachment: Holly Hill LS_13 Rehabilitation_Bid Set Specifications_04.30.19 (2019-R-38 : Lift Station #13 Rehabilitation)

demonstration shall be held upon completion of all systems at a date to be agreed upon in writing with the OWNER.

B. Acceptability of the Work's performance will be based on the Work performing as specified, under these actual and simulated operating conditions as defined in the Contract Documents. The intent of the start-up demonstration and testing is for the CONTRACTOR to demonstrate to the OWNER and the Engineer the Work will function as a complete and operable system under normal operating conditions and is ready for acceptance.

C. Certificate of Completed Demonstration: Submit five (5) copies of Demonstration Certification memo signed by the CONTRACTOR, Subcontractor and OWNER and insert one (1) copy in each Operation and Maintenance Manual.

EQUIPMENT TRAINING & STARTUP CHECKLIST

PROJECT: _____
OWNER: _____
ENGINEER: _____
CONTRACTOR: _____
DATE: _____
STRUCTURE: _____
EQUIPMENT DESCRIPTION: _____
VENDOR: _____
REPRESENTATIVE:_____ INIT.:_____

# of training days required: _____ # received: _____

STARTUP/TRAINING DESCRIPTION: _____

COMMENTS: _____

ACCEPTABLE: _____ PARTIALLY ACCEPTABLE: _____ NON-ACCEPTABLE: _____

ATTENDEES:

NAME	AFFILIATION	DATE

END OF SECTION

Attachment: Holly Hill LS_13 Rehabilitation_Bid Set Specifications_04.30.19 (2019-R-38 : Lift Station #13 Rehabilitation)

SECTION 01 77 00

CLOSEOUT PROCEDURES

PART 1 – GENERAL

1.01 DESCRIPTION

A. Scope of Work: Comply with requirement stated in Conditions of the Contract and in Specifications for administrative procedures in closing out the Work.

B. Related Requirements Described Elsewhere:

1. Cleaning and Waste Management: Section 01 74 00.

2. Start-Up Procedures: Section 01 75 16.

3. Operating and Maintenance Data: Section 01 78 23.

4. Project Record Documents: Section 01 78 39.

5. Warranties: Section 01 78 36.

1.02 SUBSTANTIAL COMPLETION

A. The Work will not be substantially complete, and CONTRACTOR may not request substantial completion inspection unless the following submittals and work is completed:

1. All Operation and Maintenance manuals have been submitted and approved to the requirements of Section 01 78 23.

2. All equipment has been checked-out by the equipment manufacturer and Certificates of Manufacturer's Check-Out have been submitted as required by Section 01 75 16.

3. All start-up and demonstration testing completed and Certificates of Completed Demonstration submitted to the requirements of Section 01 75 16.

4. Project Record Documents are complete and have been submitted and reviewed to the requirements of Section 01 78 39.

5. All training of OWNER's personnel completed.

6. All areas to be used and occupied are safe, operable in automatic and complete.

Attachment: Holly Hill LS_13 Rehabilitation_Bid Set Specifications_04.30.19 (2019-R-38 : Lift Station #13 Rehabilitation)

7. All building occupancy certificates have been issued by the appropriate building permitting agency.

8. All painting, finishes, fencing, cleanup, final grading, grassing, planting, sidewalk construction, and paving shall have been completed and ready for inspection.

9. All deficiencies noted on inspection reports or non-conformances are corrected or the correction plan approved.

B. When the conditions of paragraph 1.02 A. are met, the CONTRACTOR shall submit to the ENGINEER:

1. A written notice that he considers the Work, or portion thereof, is substantially complete, and request an inspection.

2. A punchlist of items to be corrected. (Uncompleted work which is not related to the safe, effective, efficient use of the Project may be allowed on the punchlist with the ENGINEER's approval.)

C. Within a reasonable time after receipt of such notice, the ENGINEER will make an inspection to determine the status of completion.

D. Should the ENGINEER determine that the Work is not substantially complete:

1. The ENGINEER will promptly notify the CONTRACTOR in writing, giving the reasons therefor.

2. CONTRACTOR shall remedy the deficiencies in the Work and send another written notice of substantial completion to the ENGINEER.

3. The ENGINEER will within reasonable time, re-inspect the Work. The CONTRACTOR will be liable for re-inspection fees as described in paragraph 1.04, herein.

E. When the ENGINEER finds that the Work is substantially complete, he will:

1. Schedule a walk-through of the facility to include the OWNER. ENGINEER shall determine the completeness of the punchlist and readiness of the facility for occupancy by the OWNER.

2. Prepare and deliver to OWNER a tentative Certificate of Substantial Completion with the tentative punchlist of items to be completed or corrected before final inspection.

Attachment: Holly Hill LS_13 Rehabilitation_Bid Set Specifications_04.30.19 (2019-R-38 : Lift Station #13 Rehabilitation)

3. After consideration of any objections made by the OWNER as provided in Conditions of the Contract, and when the ENGINEER considers the Work substantially complete, he will execute and deliver to the OWNER and the CONTRACTOR a definite Certificate of Substantial Completion with a revised tentative list of items to be completed or corrected. Any incomplete work allowed on a punchlist must be re-inspected upon completion and any deficiencies found will be added to the punchlist.

1.03 FINAL INSPECTION

A. Prior to CONTRACTOR's request for a final inspection the following submittals and work must be complete:

1. Project Record Documents must be approved.

2. All spare parts and maintenance materials must be suitably delivered to the OWNER per the requirements of the Technical Sections of the Specifications.

3. CONTRACTOR to submit evidence of compliance with requirements of governing authorities.

B. After satisfying the requirements of paragraph 1.03 A. and when CONTRACTOR considers the Work complete, he shall submit written certification that:

1. Contract Document requirements have been met.

2. Work has been inspected for compliance with Contract Documents.

3. Work has been completed in accordance with Contract Documents.

4. Equipment and systems have been tested in the presence of the OWNER's representative and are operational.

5. All punchlist items have been corrected or completed and the Work is ready for final inspection.

C. The ENGINEER will, within reasonable time, make an inspection to verify the status of completion with reasonable promptness after receipt of such certification.

D. Should the ENGINEER consider that the Work is incomplete or defective:

1. The ENGINEER will promptly notify the CONTRACTOR in writing, listing the incomplete or defective work.

Attachment: Holly Hill LS_13 Rehabilitation_Bid Set Specifications_04.30.19 (2019-R-38 : Lift Station #13 Rehabilitation)

2. CONTRACTOR shall take immediate steps to remedy the stated deficiencies, and send another written certification to the ENGINEER that the Work is complete.

3. The ENGINEER will, within a reasonable amount of time, re-inspect the Work and the CONTRACTOR shall be liable for re-inspection fees as described in paragraph 1.04, herein.

D. When the ENGINEER finds that the Work is acceptable under the Contract Documents, the CONTRACTOR may make closeout submittals.

1.04 RE-INSPECTION FEES

A. Should the ENGINEER perform re-inspections due to failure of the Work to comply with the claims of status of completion made by the CONTRACTOR:

1. CONTRACTOR will compensate the OWNER for such additional services.

2. OWNER will deduct the amount of such compensation from the final payment to the CONTRACTOR.

1.05 CONTRACTOR'S CLOSEOUT SUBMITTALS

A. Warranties: To requirements of Section 01 78 36.

B. Evidence of Payment and Release of Liens: To requirements of General and Supplementary Conditions.

C. Certificate of Insurance for Products and Completed Operations.

1.06 FINAL ADJUSTMENT OF ACCOUNTS

A. Submit a final statement of accounting to the ENGINEER.

B. Statement shall reflect all adjustments to the Contract Sum:

1. The original Contract Sum.

2. Additions and deductions resulting from:

a. Previous change orders or written amendment.
b. Allowances.
c. Unit prices.
d. Deductions for uncorrected work.
e. Penalties and bonuses.

Attachment: Holly Hill LS_13 Rehabilitation_Bid Set Specifications_04.30.19 (2019-R-38 : Lift Station #13 Rehabilitation)

f. Deductions for liquidated damages.
g. Deductions for re-inspection payments.
h. Other adjustments.

3. Total Contract Sum, as adjusted.

4. Previous payments.

5. Sum remaining due.

C. ENGINEER will prepare a final Change Order, reflecting approved adjustments to the Contract Sum which were not previously made by Change Orders.

1.07 FINAL APPLICATION FOR PAYMENT

A. CONTRACTOR shall submit the final Application for Payment in accordance with procedures and requirements stated in the Conditions of the Contract.

PART 2 – PRODUCTS (NOT USED)

PART 3 – EXECUTION (NOT USED)

END OF SECTION

Attachment: Holly Hill LS_13 Rehabilitation_Bid Set Specifications_04.30.19 (2019-R-38 : Lift Station #13 Rehabilitation)

SECTION 01 78 23

OPERATING AND MAINTENANCE DATA

PART 1 – GENERAL

1.01 DESCRIPTION

A. Scope of Work:

1. Compile product data and related information appropriate for OWNER's maintenance and operation of products furnished under Contract.

2. Prepare operating and maintenance data as specified in this Section and as referenced in other pertinent sections of the Specifications.

3. Instruct OWNER's personnel in maintenance of products and in operation of equipment and systems.

B. Related Requirements Described Elsewhere:

1. Section 01 33 23: Shop Drawings.

2. Section 01 78 39: Project Record Documents.

3. Section 01 78 36: Warranties.

1.02 QUALITY ASSURANCE

A. Preparation of data shall be done by personnel:

1. Trained and experienced in maintenance and operation of described products.

2. Familiar with requirements of this Section.

3. Skilled as a technical writer to the extent required to communicate essential data.

4. Skilled as draftsman competent to prepare required drawings.

Attachment: Holly Hill LS_13 Rehabilitation_Bid Set Specifications_04.30.19 (2019-R-38 : Lift Station #13 Rehabilitation)

1.03 FORM OF SUBMITTALS

A. Prepare data in form of an instructional manual for use by OWNER's personnel.

B. Hard Copy Format:

1. Size: Eight and one-half inches by 11 inches (8-1/2" x 11").

2. Paper: 20-pound minimum, white, for typed pages.

3. Text: Manufacturer's printed data, or neatly typewritten.

4. Drawings:

a. Provide reinforced punched binder tab, bind in with text.
b. Reduce larger drawings and fold to size of text pages but not larger than 14 inches x 17 inches (14" x 17").

5. Provide fly-leaf for each separate product, or each piece of operating equipment.

a. Provide typed description of products and major component parts of equipment.
b. Provide indexed tabs.

6. Cover: Identify each volume with typed or printed title "OPERATING AND MAINTENANCE INSTRUCTIONS". List:

a. Title of project.
b. Identity of separate structure as applicable.
c. Identity of general subject matter covered in the manual.

7. Binders:

a. Commercial quality three-post binders with durable and cleanable plastic covers.
b. Maximum post width: two inches (2").
c. When multiple binders are used, correlate the data into related consistent groupings.

C. Electronic Format Copy

1. Provide electronic copy of operation and maintenance data on CD/DVD. File(s) should be organized/named to correspond with hard copy.

Attachment: Holly Hill LS_13 Rehabilitation_Bid Set Specifications_04.30.19 (2019-R-38 : Lift Station #13 Rehabilitation)

1.04 CONTENT OF MANUAL

A. Neatly typewritten table of contents for each volume, arranged in systematic order.

1. CONTRACTOR, name of responsible principal, address, and telephone number.

2. A list of each product required to be included, indexed to content of the volume.

3. List, with each product, name, address, and telephone number of:

a. Subcontractor or installer.
b. A list of each product required to be included, indexed to content of the volume.
c. Identify area of responsibility of each.
d. Local source of supply for parts and replacement.

4. Identify each product by product name and other identifying symbols as set forth in Contract Documents.

B. Product Data:

1. Include only those sheets which are pertinent to the specified product.

2. Annotate each sheet to:

a. Clearly identify specific product or part installed.
b. Clearly identify data applicable to installation.
c. Delete references to inapplicable information.

C. Drawings:

1. Supplement product data with drawings as necessary to clearly illustrate:

a. Relations of component parts of equipment and systems.

2. Coordinate drawings with information in Project Record Documents to assure correct illustration of completed installation.

3. Do not use Project Record Documents as maintenance drawings.

D. Written text, as required to supplement product data for the particular installation:

1. Organize in consistent format under separate headings for different procedures.

Attachment: Holly Hill LS_13 Rehabilitation_Bid Set Specifications_04.30.19 (2019-R-38 : Lift Station #13 Rehabilitation)

2. Provide logical sequence of instructions of each procedure.

E. Copy of each warranty, bond and service contract issued.

1. Provide information sheet for OWNER's personnel, give:

a. Proper procedures in event of failure.
b. Instances which might affect validity of warranties or bonds.

1.05 MANUAL FOR MATERIALS AND FINISHES

A. Submit four (4) copies of the complete manual in final form.

B. Content: for architectural products, applied materials, and finishes:

1. Manufacturer's data, giving full information on products.

a. Catalog number, size, and composition.
b. Color and texture designations.
c. Information required for reordering special manufactured products.

2. Instructions for care and maintenance.

a. Manufacturer's recommendation for types of cleaning agents and methods.
b. Cautions against cleaning agents and methods which are detrimental to product.
c. Recommend schedule for cleaning and maintenance.

C. Content, for moisture protection and weather-exposed products:

1. Manufacturer's data, giving full information on products.

a. Applicable standards.
b. Chemical composition.
c. Details of installation.

2. Instructions for inspection, maintenance, and repair.

D. Additional requirements for maintenance data: Respective sections of the Specifications.

PART 2 – PRODUCTS (NOT USED)

PART 3 – EXECUTION (NOT USED)

END OF SECTION

Attachment: Holly Hill LS_13 Rehabilitation_Bid Set Specifications_04.30.19 (2019-R-38 : Lift Station #13 Rehabilitation)

SECTION 01 78 36

WARRANTIES

PART 1 – GENERAL

1.01 DESCRIPTION

A. Scope of Work:

1. Compile specified warranties and bonds as specified in these Specifications.

2. Co-execute submittals when so specified.

3. Review submittals to verify compliance with Contract Documents.

4. Submit to ENGINEER for review and transmittal to OWNER.

B. Related Work Described Elsewhere:

1. Instructions to Bidders: Bid Bonds.

2. Performance Bond and Payment Bond: Section 00 64 00..

1.02 SUBMITTAL REQUIREMENTS

A. Assembly warranties, bonds and service and maintenance contracts, executed by each of the respective manufacturers, suppliers, and subcontractors.

B. Number of original signed copies required: Two (2) each.

C. Table of Contents: Neatly typed, in orderly sequence. Provide complete information for each item.

1. Product of work item.

2. Firm, with name of principal, address, and telephone number.

3. Scope.

4. Date of beginning of warranty, bond, or service and maintenance contract.

Attachment: Holly Hill LS_13 Rehabilitation_Bid Set Specifications_04.30.19 (2019-R-38 : Lift Station #13 Rehabilitation)

5. Duration of warranty, bond, or service maintenance contract.

6. Provide information for OWNER's personnel:

   a. Proper procedure in case of failure.
   b. Instances which might affect the validity of warranty or bond.

7. CONTRACTOR, name of responsible principal, address, and telephone numbers.

1.03 FORM OF SUBMITTALS

A. Prepare in duplicate packets.

B. Format:

1. Size: Eight and one-half inches by 11 inches (8-1/2" x 11"), punch sheets for standard three-post binder.

   a. Fold larger sheets to fit into binders.

2. Cover: Identify each packet with typed or printed title "WARRANTIES AND BONDS". List:

   a. Title of Project.
   b. Name of CONTRACTOR.

C. Binders: Commercial quality, three (3)-post binder, with durable and cleanable plastic covers and maximum post width of two inches (2").

1.04 WARRANTY SUBMITTALS REQUIREMENTS

A. For all major pieces of equipment, submit a warranty from the equipment manufacturer. Manufacturer's warranty period shall be concurrent with CONTRACTOR's for one (1) year, unless otherwise specified, commencing at the time of final acceptance by OWNER.

B. CONTRACTOR shall be responsible for obtaining certificates for equipment warranty for all major equipment which has at least a one (1) hp motor or which lists for more than $1,000. ENGINEER reserves the right to request warranties for equipment not classified as major. CONTRACTOR shall still warrant equipment not considered to be "major" in the CONTRACTOR's one (1) year warranty period even though certificates of warranty may not be required.

Attachment: Holly Hill LS_13 Rehabilitation_Bid Set Specifications_04.30.19 (2019-R-38 : Lift Station #13 Rehabilitation)

C. In the event that the equipment manufacturer or supplier is unwilling to provide a one (1) year warranty commencing at the time of OWNER acceptance, the CONTRACTOR shall obtain from the manufacturer a two (2) year warranty commencing at the time of equipment delivery to the job site. This two (2) year warranty from the manufacturer shall not relieve the CONTRACTOR of the one (1) year warranty starting at the time of OWNER acceptance of the equipment.

D. OWNER shall incur no labor or equipment cost during the guarantee period.

E. Guarantee shall cover all necessary labor, equipment and replacement parts resulting from faulty or inadequate design, improper assembly or erection, defective workmanship and materials, leakage, breakage or other failure of all equipment and components furnished by manufacturer.

PART 2 – PRODUCTS (NOT USED)

PART 3 – EXECUTION (NOT USED)

END OF SECTION

Attachment: Holly Hill LS_13 Rehabilitation_Bid Set Specifications_04.30.19 (2019-R-38 : Lift Station #13 Rehabilitation)

SECTION 01 78 39

PROJECT RECORD DOCUMENTS

PART 1 – GENERAL

1.01 REQUIREMENTS INCLUDED

A. Maintain at the site for the OWNER one record copy of:

1. Drawings.

2. Specifications.

3. Addenda.

4. Change Orders and other modifications of the contract.

5. ENGINEER's Field Orders or written instructions.

6. Approved Shop Drawings.

7. Field Test records.

8. Construction photographs, preconstruction videos, and pipeline videos.

9. Preliminary as-built drawings.

1.02 MAINTENANCE OF DOCUMENTS AND SAMPLES

A. Store documents and samples in CONTRACTOR's field office apart from documents used for construction.

1. Provide files and racks for storage of documents.

2. Provide locked cabinet or secure storage space for storage of samples.

B. File documents and samples in accordance with CSI format with section numbers as provided herein.

C. Maintain documents in a clean, dry, legible condition, and in good order. Do not use record documents for construction purposes.

D. Make documents and samples available at all times for inspection by the ENGINEER.

Attachment: Holly Hill LS_13 Rehabilitation_Bid Set Specifications_04.30.19 (2019-R-38 : Lift Station #13 Rehabilitation)

E. As a prerequisite for monthly progress payments, the CONTRACTOR shall provide the currently updated "Record Documents" for review by the ENGINEER and OWNER.

1.03 MARKING DEVICES

A. Provide felt tip marking pens for recording information in the color code designated by the ENGINEER.

1.04 RECORDING

A. Label each document "PROJECT RECORD" in neat large printed letters.

B. Record information concurrently with construction progress. Do not conceal any work until required information is recorded.

C. Drawings: Legibly mark to record actual construction:

1. Depths of various elements of foundation in relation to finish first floor datum.

2. All underground piping with elevations and dimensions. Change to piping location. Horizontal and vertical locations of underground utilities and appurtenances, referenced to permanent surface improvements. Actual installed pipe materials, class, etc.

3. Location of internal utilities and appurtenances concealed in the construction, referenced to visible and accessible features of the structure.

4. Field changes of dimensional and detail.

5. Changes made by Field Order or by Change Order.

6. Details not on original contract drawings.

7. Equipment and piping relocations.

8. Major architectural and structural changes including relocation of doors, windows, etc.

9. Architectural schedule changes according to CONTRACTOR's records or shop drawings.

a. CONTRACTOR shall provide copies of all such recordings to the CONTRACTOR's surveyor for incorporation into the preliminary and final as-builts drawings.

Attachment: Holly Hill LS_13 Rehabilitation_Bid Set Specifications_04.30.19 (2019-R-38 : Lift Station #13 Rehabilitation)

D. Specifications and Addenda: Legibly mark each section to record:

1. Manufacturer, trade name, catalog number, and supplier of each product and item of equipment actually installed.

2. Changes made by Field Order or by Change Order.

E. Shop Drawings (after final review and approval): Provide four (4) sets of record drawings for each process equipment, piping, electrical system, and instrumentation system.

1.05 SUBMITTAL

A. Accompany each submittal with transmittal letter in duplicate, containing:

1. Date.

2. Project title and number.

3. CONTRACTOR's name and address.

4. Title and number of each Record Document.

5. Signature of CONTRACTOR or his authorized representative.

B. Preliminary As-built Drawings: The CONTRACTOR shall submit to the ENGINEER two (2) paper copies of preliminary as-built drawings prepared and signed/sealed by the CONTRACTOR's surveyor with each monthly progress payment request. Preliminary as-built drawings shall conform to the requirements of final as-built drawings and shall represent the completed work to date. Preliminary as-built drawings shall include all work which the CONTRACTOR is requesting to be paid for.

C. Final As-built Drawings: Upon project closeout and as a prerequisite to the final pay request, the CONTRACTOR shall submit to the ENGINEER final as-built drawings Administrative Code, pursuant to Section 472.027 of the Florida Statutes. The ENGINEER shall supply the CONTRACTOR copies of AutoCad files for the CONTRACTOR's use in the as-built drawing preparation. Final as-built drawings shall include all work which the CONTRACTOR is requesting to be paid for. The final as-built drawing submittal shall include:

1. Two (2) sets of paper plans signed and sealed by a professional land surveyor licensed in the State of Florida and CD(s) containing AutoCad, version 14, drawing files.

Attachment: Holly Hill LS_13 Rehabilitation_Bid Set Specifications_04.30.19 (2019-R-38 : Lift Station #13 Rehabilitation)

2. AutoCad drawing files shall include as-built information on layers separate from the original drawing layers and shall be named descriptively to represent the as-built features. (i.e.- Layer "wat ab" and "wat ab txt" for water as-built linework and text, respectively.) Drawing entities are to be shown on the correct layer. All as-built entities shall have color and line type set "bylayer". Text sizes shall be relative to the plotted scale. Additional details or exploded views shall be included to accurately and fully represent the as-built conditions.

3. Certification by surveyor that the as-built information shown is accurate and that all improvements shown were constructed within or on public rights-of-way, easements or property specifically owned by the OWNER. Certification shall be to the OWNER, ENGINEER and St. Johns River Water Management (if applicable.)

4. No linework and text shall be erased from the original design (construction) drawings during the as-built drawing preparation. Original linework or text shall be circled if accurate or stricken (not erased) if not with the accurate information noted/shown. New linework and text shall be provided to accurately show the as-built information for the constructed improvements. Revisions to design dimensions alone will not be permitted.

5. Pressure Pipeline and Utility Conduit Improvements: For utility improvement projects, horizontal locations of the constructed pipelines with respect to the right-of-way lines or other readily visible, permanent features at 100 foot (100') minimum intervals and at critical locations such as road intersections shall be shown. For treatment plant and pump station improvements, horizontal locations shall be provided at 20 foot (20') intervals. Vertical locations of the constructed pipelines by elevation of centerline of pipe for above ground/exposed pipe or with respect to finished grade over buried pipe shall be shown at 100 feet (100') minimum intervals. (i.e. final cover) For underground piping, all valves, blow-offs, stub-outs, pigging stations, fire hydrants, backflow preventers and services shall be located horizontally in relation to readily visible, permanent features with three-way horizontal dimensions less than 100 feet (100'), each. Three-way dimensions to all buried fittings on treatment plant and pump station improvement projects shall be provided. If adequate features are not available, a station and offset dimensioning system can be used if prior approval is obtained from the ENGINEER. For above ground/exposed pipe, as-built dimensions between fittings or flanges shall be provided. Separations between sanitary hazards to potable water and reclaimed water mains per FDEP shall be shown.

6. Gravity Pipeline Improvements: Show elevations for all inverts, manhole tops, inlet throats/weirs, grate tops, etc. Show size and type of each structure. As-built length, size, and type of pipes between the structures

Attachment: Holly Hill LS_13 Rehabilitation_Bid Set Specifications_04.30.19 (2019-R-38 : Lift Station #13 Rehabilitation)

shall be shown. All service laterals and cleanouts shall be located horizontally to readily visible, permanent features with three way horizontal dimensions less than 100 feet (100'), each. If adequate features are not available, a station and offset dimensioning system can be used if prior approval is obtained from the ENGINEER. A labeling and dimension table scheme is recommended for the three way or station/offset dimensioning. (i.e.-constructed feature labeled as "A", permanent feature labeled as "B", "A"-"B" dimension shown in table for distance measured between the two. Use continuous labeling and complete single table per plan sheet.) Separations between gravity "sanitary hazards" to potable water and reclaimed water mains per FDEP shall be shown.

7. Roadway Improvements: Elevation, size and location of swales, ditches, gutter flow-lines, edge of pavement, and road crown on both sides of the road if applicable shall be provided at 100 foot (100') minimum intervals and at critical areas such as intersections and inlets/flumes. As-built points of curvature, tangent and vertical intersection, along with radii of road alignment, intersecting streets and driveways and other alignment information shall be provided.

8. Stormwater Improvements: The limits, slopes, and bottom depths of stormwater ponds, swales and other retention areas shall be provided. All stormwater piping information shall conform to the Gravity Pipeline Improvement requirements. Size, type, material, and elevations of all stormwater structures, including appurtenances such as weirs, orifices, skimmer plates, etc. shall be shown. As-built information shall conform to St. Johns River Water Management District requirements.

9. Treatment Facility Improvements: Location, size, number, and type of treatment equipment and structures shall be shown. Applicable requirements of as-built information listed herein for similar improvements shall be required.

10. Building Improvements: Finished floor elevations, ceiling heights, building locations, wall opening dimensions, equipment (electrical, mechanical, plumbing) locations, etc. shall be provided. Change of material shall be specifically noted as such.

11. Landscaping Improvements: Number, type, size, and general location of installed plant material shall be provided. Change of material shall be specifically noted as such. Location of irrigation meters, services, manual valves, automatic valves, controllers, rain shut off switches, etc. shall be shown. Changes to the designed irrigation system shall be shown.

Attachment: Holly Hill LS_13 Rehabilitation_Bid Set Specifications_04.30.19 (2019-R-38 : Lift Station #13 Rehabilitation)

12. Other Improvements: Changes from the original design of other improvements such as electrical, mechanical, and structural improvements shall be noted as such on the as-built drawings with the size, number, type, and location of the constructed/installed improvements noted.

13. CONTRACTOR may be required to reimburse the OWNER for services rendered by the ENGINEER for review of multiple resubmittals per SC-6.17, 1. of Section 00 80 00: Supplementary Conditions.

PART 2 – PRODUCTS (NOT USED)

PART 3 – EXECUTION (NOT USED)

END OF SECTION

Attachment: Holly Hill LS_13 Rehabilitation_Bid Set Specifications_04.30.19 (2019-R-38 : Lift Station #13 Rehabilitation)

SECTION 03 30 00

CAST IN-PLACE AND POURED CONCRETE

PART 1 – GENERAL

1.01 WORK INCLUDED

A. The work included under this section consists of furnishing all materials, forms, transportation, and equipment, and performing all necessary labor to do all the plain and reinforced concrete work shown on the Drawings, or incidental to the proper execution of the work, or as herein specified.

B. Composition: Concrete shall be composed of cement, fine aggregate, coarse aggregate, and water so proportioned and mixed as to produce a plastic workable mixture in accordance with all requirements under this section suitable to the specific conditions of placement.

1.02 SUBMITTALS

A. All materials specified shall be certified by the producer or manufacturer that the furnished material meets the specific requirements of the specifications. Concrete mix designs shall be submitted for approval prior to placement.

1.03 CODES AND STANDARDS

A. ACI 301 "Specifications for Structural Concrete for Buildings", ACI 318 "Building Code Requirements for Structural Concrete", ACI 347 "Recommended Practice for Concrete Formwork", ACI 304 "Recommended Practice for Measuring, Mixing, Transporting, and Placing Concrete", comply with applicable provisions except as otherwise indicated.

1.04 TESTING

A. Air content shall be in accordance with American Society for Testing Materials Standard Methods C 173, one for each set of compressive strength specimens.

B. Sampling of freshly mixed concrete shall be in accordance with ASTM C 172.

C. Slump: ASTM C 143.

D. Test results will be reported in writing to ENGINEER, CONTRACTOR, OWNER, and Concrete producer on same day tests are made.

E. Laboratory Reports: Submit two (2) copies of laboratory test or evaluation reports for concrete materials and mix designs.

Attachment: Holly Hill LS_13 Rehabilitation_Bid Set Specifications_04.30.19 (2019-R-38 : Lift Station #13 Rehabilitation)

PART 2 – MATERIALS AND EQUIPMENT

2.01 Portland Cement. Shall comply with the standard specifications for Portland Cement, ASTM C 150, Type II, or Type III (high-early), where indicated on drawings.

2.02 Concrete Aggregate. Shall conform to standard specifications for concrete aggregate, ASTM C 33 or to ASTM C 330. Maximum size of aggregate shall not exceed one-fifth (1/5) of the narrowest dimension between reinforcing bars.

A. Fine Aggregate. Fine aggregate shall be clean, hard, strong, durable, uncoated particles of natural sand known as Lake Wales, Interlachen, or approved equal. The source, composition, quality, and gradation of the fine aggregate shall be subject aid the approval of the ENGINEER. Samples of the sand shall be furnished, together with certified copies of the gradation and analysis from the recognized testing laboratory.

1. The weight of extraneous or deleterious substances shall not exceed the following percentages:

Loss by Decantation	3%
Shale	1%
Clay Lumps	1%
Coat and Lignite	1%

2. The fine aggregate shall be reasonable well graded from coarse to fine and when tested by means of laboratory sieves shall meet the following requirements in percent of total weight:

Total Retained On	Percent (%) Retained
No. 4 Sieve	0 – 5
No. 10 Sieve	3 – 30
No. 30 Sieve	30 – 70
No. 50 Sieve	65 – 95
No. 100 Sieve	95 – 100

3. Deficiencies in the percentages of the fine aggregates passing the No. 50 and No. 100 Sieves may be remedied by the addition of pozzolanic or

Attachment: Holly Hill LS_13 Rehabilitation_Bid Set Specifications_04.30.19 (2019-R-38 : Lift Station #13 Rehabilitation)

cementitious materials excepting Portland cement. Such materials must meet the approval of the ENGINEER.

B. Coarse Aggregate. Coarse aggregate shall consist of hard, tough, durable components free from adherent coatings and vegetable matter, and shall not contain soft, friable, thin, or elongated particles in quantities considered deleterious by the ENGINEER. Coarse aggregate shall be properly graded from fine to coarse to produce concrete of desired strength, density, and workability. The source, composition, quality, and gradation of the coarse aggregate shall be subject to the approval of the ENGINEER. Samples of the coarse aggregate shall be furnished together with certified copies of the gradation and analysis from a recognized testing laboratory.

1. All coarse aggregate shall be washed and shall be free from disintegrated pieces, salt, alkali, vegetable matter and adherent coatings. The total percentage of all deleterious substances shall not exceed five percent (5%) by weight. The substances designated shall not be present in excess of the following amounts.

Loss by Decantation	1%
Clay Lumps or Other Soluble Materials	3%
Soft Fragments	5%

2. Where the cover over reinforcing is two inches (2") or more, the maximum size of aggregate shall be 12 inches (12"). Where the cover over reinforcing is less than two inches (2"), the maximum size of aggregate shall be three-quarter inch (3/4"). The maximum size of aggregate shall not exceed one-fifth (1/5) of the narrowest dimension between forms nor three-fourths of the minimum clear spacing between reinforcing bars. The grading of the coarse aggregate in the concrete shall be within the following limits.

Percent Passing	
Maximum Size Square Mesh Screen	97 – 100 %
2 Maximum Size Square Mesh Screen	40 – 70 %
No. 4 Sieve	0 – 6 %

2.03 WATER. Water shall be clean and free from oil, acids, alkalis, organic materials, or other injurious substances.

Attachment: Holly Hill LS_13 Rehabilitation_Bid Set Specifications_04.30.19 (2019-R-38 : Lift Station #13 Rehabilitation)

2.04 REINFORCEMENT

A. Reinforcing Bars: ASTM A 615, Grade 60, deformed bars of USA manufacture.

B. Welded Wire Fabric: ASTM A 185, gauges, spacing, and dimensions as indicated.

C. Metal Bar Supports: CRSI MSP-1, Chapter 3, Class 2, Type B, Stainless Steel Protected Bar Supports, or otherwise approved by the ENGINEER. Use concrete supports for reinforcement in concrete placed on grade.

D. Tie Wire: 16-gauge minimum, black, soft annealed.

E. Coupler Splice Devices: Cadweld tensions couplers, capable of developing the ultimate strength of the bar as manufactured by Erico Products, Incorporated, Solon, Ohio, or equal.

F. Epoxy coated or FRP rebar shall be used for all marine applications.

2.05 FORM WORK

A. Lumber: Douglas Fir or Larch, No. 2 grade, seasoned and surfaced on four sides.

B. Plywood: Plyform, Class 1, BB-Exterior type, mill oiled and edge sealed, with thickness not less than three-quarter inch (3/4").

C. Medium Density Overlay (MDO) Plywood Forms: PS-1, B-B High Density Concrete Form Overlay, Class I, unoiled.

1. Butt form panels, make contact surface fully flush and seal butting holes with sponge form tape. Chamfer edges of beams and ceilings.

2. Where MDO plywood is used to form beams, do not use MDO plywood that has been patched or damaged.

D. Drip Forms: Varnished ponderosa pine or equally rigid non-staining plastic, two-inch (2") wide on each leg.

E. Steel Forms. Uncoated steel, three-sixteenth inch (3/16") minimum thickness, fabricated to close tolerances, protected only by the specified release agent, braced so as not to bend, dent, or dimple under wet concrete load, vibrator impact, and tool impact. Maintain steel form in rust-free condition by use of steel wood and light grinding, followed by coats of specified release agent. Use forms that can be adjusted into true alignment without stops or ridges.

F. Glass Fiber Reinforced Plastic (FRP) Forms: Smooth coated forms, braced so as not to bend, dent or dimple under wet concrete loads, vibrator impact and tool impact, and at least 0.11 inch (0.11") thick. Design forms for external bracing at piers and columns, without use of form ties.

Attachment: Holly Hill LS_13 Rehabilitation_Bid Set Specifications_04.30.19 (2019-R-38 : Lift Station #13 Rehabilitation)

G. Plugged Cone Form Ties: Rod type, with ends or end fasteners which can be removed without spalling the concrete and which leave a hole equal in depth to the required reinforcement clearance. Form ties shall be of a design in which the hole left by the removed end or end fastener is easily filled to match the surface of the hardened concrete. Provide removable cones 13 inches (13") in diameter by 12 inches (12") deep. Provide preformed mortar plugs to match the color of the concrete, recessed three inches (3"), adhered with an approved two (2)-part epoxy.

H. Weep Hole Forms: PVC polyethylene, or ABS pipe, matching color of the concrete, four-inch (4") inside diameter, with outlet projecting 12 inches (12") form wall and cutoff in a plane parallel to it.

I. Circular and Elliptical Column Forms: Fabricate of two (2) pieces, clamped watertight using gaskets and without horizontal joints. Install horizontal construction joints only where indicated or as directed by the ENGINEER.

J. Beam Forms: Provide in one length without form joints and suitable for cambering up to 1/160 of span without distortion of profile or opening of seams.

K. Forms of Hammerhead Pier Caps: Provide in one (1) length with adjustable soffits, bulkheads and screens as necessary to accommodate different hammerhead beam configurations. Provide no construction joints in hammerhead pier caps. Where three or fewer identical hammerhead pier caps occur within a line section, steel braced HDO plywood forms may be substituted for steel forms if:

1. Working drawings of formwork are submitted.

2. Internal form ties are regularly spaced no less than 48 inches (48") each way, and are made watertight.

3. Form ties have removable cones, which are filled to match concrete.

4. Joints in panels are fully watertight.

5. The resulting surface matches the appearance of steel formed hammerhead caps, with no visible discoloration due to form leakage.

L. Styrofoam Board: Expanded polystyrene extruded into board form, closed cell, moisture resistant, capable of maintaining indicated clear space between concrete structures.

M. Control Joint Filler: Use epoxy joint filler equal to BurkEpoxy Joint Filler to fill voids left by saw cuts and to resist against spalling caused by vehicle traffic in concrete slabs.

Attachment: Holly Hill LS_13 Rehabilitation_Bid Set Specifications_04.30.19 (2019-R-38 : Lift Station #13 Rehabilitation)

N. Inserts: Galvanized cast steel or galvanized welded steel, complete with anchors to concrete and fittings such as bolts, wedges, and straps. Provide hanger inserts spaced to match grid of suspended ceilings.

O. Shoring: As designed and executed by CONTRACTOR to support all loads.

P. Chamfer Strips: Polyvinyl strips designed to be nailed in the forms to provide a three-quarter inch (3/4") chamfer at exposed edges of concrete members.

Q. Form Release Agent: A blend of natural and synthetic chemicals that employs a chemical reaction to provide quick, easy, and clean release of concrete from forms, and equal to Eucoslip, by the Euclid Chemical Company, or Release #1, by The Burke Company. Use a non-staining release agent that leaves the concrete with a paintable surface.

2.06 ADMIXTURES

A. Air Entraining Admixture: ASTM C 260.

B. Water Reducing and Retarding Admixture:

1. Concrete Without Superplasticizer:

a. Water Reducing Admixtures: ASTM C 494, Type A, equal to Eucon WR-75 by the Euclid Company, Pozzolith 200N by Master Builders, Plastocrete 161 by Sika Chemical Corporation, and containing no calcium chloride.

b. Water Reducing and Retarding Admixtures: ASTM C 494, Type D, equal to Eucon Retarder-75 by the Euclid Company, Pozzolith 100 XR by Master Builders, Plastiment by Sika Chemical Corporation, and containing no calcium chloride.

c. Accelerating Admixtures: ASTM C 494, Type C or E, equal to Accelguard 80 by the Euclid Company, Darex Set Accelerator by W.R. Grace, and containing no calcium chloride.

2. Concrete with Superplasticizer:

a. Water Reducing, High Range Admixtures: ASTM C 494, Type F or G, equal to Eucon 37 by the Euclid Company, Rheobild 716 by Master Builders, Daracem 100 by W.R. Grace, Sikament by Sika Chemical Corporation, and consisting of a second-generation admixture, free of chlorides and alkalis (except for those attributable to water) composed of a synthesized sulfonated complex polymer, enabling the concrete to maintain its rehoplastic state in excess of two (2) hours if necessary.

Attachment: Holly Hill LS_13 Rehabilitation_Bid Set Specifications_04.30.19 (2019-R-38 : Lift Station #13 Rehabilitation)

b. Manufacturer's Job Site Representation: Provide the services of a competent field service representative from the manufacturer of each of the admixtures selected for use to provide at the job site advice and consultation on the use of the admixture materials, including the effect on the concrete in place, including recommending maximum discharge time for superplasticizer method and procedure to induce superplasticizer into mixer, quantities of admixtures to be used if variations are required because of temperature/humidity, wind or other environmental considerations, and to be available on short call at any time requested by the OWNER, CONTRACTOR, or concrete producer.

3. Concrete used in Marine Applications:

a. Micro Silica admixtures shall be used for concrete installed in marine and coastal applications. Concrete designs shall meet the appropriate requirements of EN206-1, BS 8500 and BS 5075. CONTRACTOR shall provide plant certification for all mix designs used in marine and coastal applications.

2.07 GROUT

A. Nonshrink, Nonmetallic Grout: The Burke Company's Non-Ferrous, Non-Shrink Grout, Sauereisen F-100 Level Fill, Master Builders Masterflow 713, Euclid NS Grout, or equal pre-mixed type.

B. Nonshrink Metallic Grout: The Burke Company's Metallic Spec Grout, Master Builders Embeco 636 Grout pre-mixed type, or equal.

C. Epoxy Grout: Sikadur 42 Grout-Pak, or equal, for grouting sleeves for anchor bolts, etc.

D. Clarifier Basin Grout: Class B concrete of coarse aggregate shall pass the three-quarter inch (3/4") sieve.

2.08 MEMBRANE CURING COMPOUND. Membrane curing compound shall be wax-free, pigmented, 100 percent (100%) resin base compound such as A.C. Horn's "Horncure 30 C", Hunt Process Corporation; Southern's "All-Resin", or equal.

2.09 BONDING AGENT. Bonding agent shall be Colma Fix, as manufactured by Sika Chemical Corporation, of Passaic, New Jersey or equal. To be considered equal, the material must be a two-component epoxy-polysulphide resin system, and it must have a demonstrated record of strong adhesion to both wet and dry concrete in either the hardened or the plastic state. It must also be of equal strength.

Attachment: Holly Hill LS_13 Rehabilitation_Bid Set Specifications_04.30.19 (2019-R-38 : Lift Station #13 Rehabilitation)

2.10 ACCESSORIES

A. Precast Concrete Block Supports for Reinforcing Bars: Comply with ACI 315. Provide blocks with No. 4 dowels bent 90 degrees (90°) to support top bars.

B. Membrane: Six (6) mil polyethylene film.

C. Water Stops: Polyvinyl chloride meeting all requirements of U.S. Army Corps of Engineer's Specification CRD-C-572 and equal to Burke Water Stops as manufactured by The Burke Company. Provide flat dumbbell type and center bulb type, nine inches by three-eighth inches (9" x 3/8") at wall thickness of 12 inches (12") or greater, and six inches by three-eighth inches (6" x 3/8") at wall thickness less than 12 inches (12"). Provide six inch (6") split-ribbed with center bulb type at connections of new concrete structures with existing concrete. Provide water stops as indicated on the Drawings.

D. Preformed Expansion Joint Filler:

1. Bituminous type conforming to the requirements of ASTM D 994.

2. Non-extruding type, self-expanding cork, three-quarter inch (3/4") thick or as otherwise shown on the Drawings, conforming to the requirements of ASTM D1752, Type III, and compatible with the specified joint sealant compound.

E. Joint Sealant: A multipart gray polyurethane sealant, meeting U.S. Federal Specification TT-S-00227E (3) Type 1, Class A self-leveling for horizontal joints, and Type II, Class A, non-sag for vertical joints, and recommended by the manufacturer for continuous immersion in water. Provide sealants as manufactured by Products Research and Chemical Corporation, Mameco International, The Burke Company, W.R. Meadows, or equal.

F. Tongue and Groove Joint Forms: 24-gauge steel forms complete with steel stakes and splice plates, designed for joints not to receive a poured seal, and equal to Burke Keyed Kold Joint as manufactured by The Burke Company.

G. Inserts: Galvanized steel to fit the proposed hanger or support.

H. Mortar for Repair of Concrete: Same materials as used for concrete, except omit coarse aggregate and use not more than one (1) part cement to two and one-half (2-1/2) parts sand by damp loose volume. Use no more mixing water than is necessary for handling and placing.

I. Burlap Mats: Conform to AASHTO Specification M182.

J. Epoxy Bonding Agent: Euco #452, BurkEpoxy MV, Sikadur Hi Mod, Concresive 1001-LPL, or equal.

Attachment: Holly Hill LS_13 Rehabilitation_Bid Set Specifications_04.30.19 (2019-R-38 : Lift Station #13 Rehabilitation)

K. Powered Epoxy Coating for Anchor Bolts: Powdered epoxy resin as manufactured by the 3M Company, Scotchkote No. 213, Armstrong No. R349.

2.11 CONDUITS AND PIPES EMBEDDED IN CONCRETE

A. Conduits, pipes, and sleeves of any material not harmful to concrete shall be permitted to be embedded in concrete with approval of the ENGINEER, provided they are not considered to replace structurally the displaced concrete.

B. Conduits and pipes of aluminum shall not be embedded in structural concrete unless effectively coated or covered to prevent electrolytic action between aluminum and steel.

C. Conduits and pipes, with their fittings, embedded within a column shall not displace more than four percent (4%) of the area of cross section on which strength is calculated or which is required for fire protections.

D. Conduits, pipes, sleeves passing through a slab, wall or beam shall not impair significantly the strength of the construction.

E. Except when plans for conduits and pipes are approved by the ENGINEER, conduits and pipes embedded within a slab, wall, or beam shall satisfy the following:

1. They shall not be larger in outside dimension than one-third (1/3) overall thickness of slab, wall, or beam in which they are embedded.

2. They shall not be spaced closer than three (3) diameters or widths on center.

2.12 PIPES CONTAINING LIQUID, GAS, OR VAPOR

A. Pipes that will contain liquid, gas or vapor may be embedded in structural concrete under the following conditions:

1. Pipes and fittings shall be designed to resist effects of the material, pressure, and temperature to which they will be subjected.

2. No liquid, gas, or vapor, except water not exceeding 90°F (32°C) nor 50 psi (345 kPa) pressure, shall be placed in the pipes until the concrete has attained its design strength.

3. Concrete cover for pipes, conduits and fittings shall be not less than 12 inches (12" or 38 mm) for concrete exposed to earth or weather or in contact with ground.

4. Reinforcement with an area of not less than 0.002 times area of concrete section shall be provided normal to piping.

Attachment: Holly Hill LS_13 Rehabilitation_Bid Set Specifications_04.30.19 (2019-R-38 : Lift Station #13 Rehabilitation)

5. Piping and conduit shall be so fabricated and installed that cutting, bending or displacement of reinforced from its proper location will not be required.

PART 3 – EXECUTION

3.01 PROPORTIONING

A. The proportions of aggregate to cement shall be such as to produce a thoroughly plastic mixture which will work readily into the corners and angles of the forms and around the reinforcement but without permitting the materials to segregate or excess free water to collect on the surface. The percentage of sand shall not be less than 30 percent (30%) nor more than 50 percent (50%) of the total weight of the aggregate.

B. The total content, including the surface water contained in the aggregate, shall not exceed 5.7 gallons per sack of cement. The slump shall not exceed four inches (4"). Air-entraining admixture shall be Darex AEA as manufactured by the Dewey and Almy Chemical Company.

C. The amount of air entrained in the freshly mixed concrete shall not be less than three percent (3%) nor more than six percent (6%). The minimum cement content in sacks per cubic yard of concrete shall not be less than six (6) sacks per cubic yard for Class "A" concrete.

D. Concrete materials shall be accurately measured by weight. Measurement of materials for ready-mixed concrete shall conform to the "Standard Specifications for Ready-Mixed Concrete" (ASTM C 94).

1. Class "A" concrete for all structures shall have minimum compressive strength of 4000 psi at 28 days.

2. Class "B" concrete for sidewalks shall have minimum compressive strength of 3000 psi at 28 days.

3. All concrete shall be Class "A" unless otherwise shown on the drawings.

3.02 MIXING AND PLACING

A. Concrete shall be mixed, conveyed, and deposited in accordance with the "A.C.I. Building Code" (A.C.I. 318).

B. Prior to placing any concrete, the CONTRACTOR shall submit for the ENGINEER's approval a design mix, calculated by a recognized testing laboratory, and using the approved aggregates to produce a workable mix of the desired strength, together with certified copies of seven (7) days and 28 day tests of cylinders taken from concrete made according to the design mix. The mixes shall be designed to secure concrete having a minimum compressive strength at age 28 days.

Attachment: Holly Hill LS_13 Rehabilitation_Bid Set Specifications_04.30.19 (2019-R-38 : Lift Station #13 Rehabilitation)

C. Ready-mixed concrete delivered shall be accompanied by delivery tickets showing the following:

1.	Date and time leaving plant	Additives (if any)
2.	Type of cement and weight	Site arrival time
3.	Quantity of water and time added	Site leaving time

D. Concrete.

1. Ready-mixed concrete shall be used. All mixing requirements specified herein shall be enforced, and the OWNER's laboratory representative and the ENGINEER shall have free access to the mixing plant at all times.

2. Except for materials and/or procedures otherwise specified herein, ready-mixed concrete shall be mixed and delivered in accordance with the requirements of ASTM C 94.

3. No water shall be added to the concrete after it leaves the plant except where part of the design water was purposely omitted at the plant, and then only as approved by the ENGINEER.

E. Mixer Speed.

1. Neither the speed of any mixer nor the quantity of material loaded into any mixer shall exceed the recommendations of the manufacturer.

2. Excessive over-mixing, required additions of water to preserve the required consistency, shall be cause for rejection of the batch.

3. Concrete shall not remain in a transit mixer or agitator truck more than 90 minutes after the water has been introduced, and not for more than 45 minutes if any approved retarding agent is not used.

4. Minimum mixing time shall be 50 revolutions of drum at rated speed.

F. Measurement.

1. Equipment necessary to determine and control the actual amounts of all materials entering the concrete shall be provided by the concrete manufacturer.

2. All materials shall be measured by weight, except that water may be measured by volume calculated at eight and one-third (8-1/3) pounds per gallon. One bag of cement will be considered as 94 pounds in weight.

Attachment: Holly Hill LS_13 Rehabilitation_Bid Set Specifications_04.30.19 (2019-R-38 : Lift Station #13 Rehabilitation)

G. Mixes.

1. Mix Design: Conform to ACI 318, Section 4.3. Submit data on consecutive tests and standard deviation.

2. Maximum Water – Cement Ratio:

- 0.37 (lbs/lb) – Concrete with superplasticizer
- 0.38 (lbs/lb) – Concrete in Marine Environments
- 0.45 (lbs/lb) – Class A concrete without superplasticizer
- 0.55 (lbs/lb) – Class B concrete without superplasticizer
- 0.65 (lbs/lb) – Class C concrete without superplasticizer

3. Air Content: Five percent (5%) plus or minus one and one-half percent (±1.5%) (Class A and B).

4. Slump:

- Four inches (4") plus or minus one inch (±1") for Class A and B without superplasticizer.
- Seven inches (7") plus or minus one inch (±1") for Class A and B with superplasticizer.
- Eight inches (8") plus or minus one inch (±1") for tremie concrete or as specified by details.

H. Placing Concrete.

1. All concrete shall be placed in clean, damp forms that are not hot to the touch.

2. To prevent segregation, concrete shall be deposited as nearly as practicable in final position and not allowed to drop freely more than necessary and in no case more than five feet (5'), except in an approved funnel or tremie. All concrete shall be placed during daylight unless otherwise authorized at least four (4) hours in advance. Where the reinforcing steel above the top of the concrete being placed becomes coated with laitance or partially set-up concrete, all such concrete shall be removed from the reinforcing steel prior to placing concrete around the bars.

3. Concrete shall be packed carefully and tightly around pipe and other items to secure maximum adhesion.

4. Concrete shall be placed in layers not over 12 inches (12") deep before compacting. Concrete shall be compacted by internal vibrating equipment supplemented by spading and hand-rodding between reinforcing steel and form to eliminate air bubbles and honeycomb. Vibrators shall not be used to

Attachment: Holly Hill LS_13 Rehabilitation_Bid Set Specifications_04.30.19 (2019-R-38 : Lift Station #13 Rehabilitation)

move the concrete laterally inside the forms. Duration of vibration shall be limited to the time necessary to provide satisfactory consolidation without causing segregation, not less than five (5) and not more than 15 seconds per square foot of exposed top surface. The vibrator shall be constantly relocated and shall be placed in each specific spot only once for each layer. The CONTRACTOR shall take steps to assure that sufficient personnel are available to devote full time to operating vibrator, spading and rodding.

5. Wall concrete shall be placed in layers as indicated above, with the first lift preceded by a one-inch (1") minimum layer of one to two and one-half (1:2-1/2) cement-sand grout, with a six-inch (6") to eight-inch (8") slump, placed on existing concrete not more than 20 minutes before concrete placement. The surface of previously placed hardened concrete shall be clean and wet before grouting, or shall be treated with a bonding agent as required. Puddles of water in horizontal recessed keys shall be avoided by the use of drain recesses to outside edge of concrete. Concrete in walls and deep beams shall be placed in lifts not to exceed three (3) layers at 12 inches (12") each for the full length of the pour before proceeding higher. The placing of concrete shall not be delayed more than 20 minutes between layers or lifts.

6. Slab forms shall be thoroughly cleaned after placing wall concrete below. Concrete in beams or walls shall be placed to bottom of floor slab. After concrete in walls below floor slab has been in place for approximately 30 minutes, the concrete for the floor slab and upper portion of the beam shall be placed and vibrated.

7. When concrete is conveyed by chutes, the equipment shall be of proper size and design to insure a continuous flow in the chute. The chutes shall be metal or metal lined, and the different portions shall have approximately the same slope. The slope shall not be less than one (1) vertical to three (3) horizontal or more than one (1) vertical to two (2) horizontal, and there shall be provision for a baffle at the discharge end of the chute to prevent segregation. If the vertical distance between the discharge end of the chute and the surface of the concrete is more than five feet (5'), a spout shall be used. The lower end of the spout shall be kept as near the surface of the deposit as is practicable. All chutes and spouts shall be thoroughly cleaned before and after each run. All debris and water shall be discharged outside the forms.

3.03 CURING AND PROTECTION

A. Curing:

1. Immediately after surface defects have been repaired, apply a spray coat of curing compound to all exposed surfaces, including slabs, walls, beams and columns in accordance with the manufacturer's recommendations. Protect exposed steel keyways and other embedded items from the curing compound.

Attachment: Holly Hill LS_13 Rehabilitation_Bid Set Specifications_04.30.19 (2019-R-38 : Lift Station #13 Rehabilitation)

Water cure, as specified in paragraph B hereunder, all concrete surfaces that are to be exposed to wastewater, surfaces that are to be coated with a coal tar epoxy system, and concrete floors requiring a bond for special finishes.

2. Do not apply compound during periods of rainfall. Should the film become damaged from any cause within the required curing period, immediately repair the damaged portions with additional compound. Upon removal of forms, immediately coat the newly exposed surfaces to provide a curing treatment equal to that provided for the surface.

3. Curing and Sealing Compound: Use clear compound conforming to Federal Specification TT-C-800A, 30 percent (30%) solids content minimum, having test data from an independent laboratory indicating a maximum moisture loss of 0.030 grams per sq. cm. when applied at a coverage rate of 300 sq. ft. per gallon, and equal to Super Floor Coat or Super Pliocure by The Euclid Chemical Company or Masterseal 66 by Master Builders. Furnish manufacturer's certification as required.

4. Apply specified clear curing and sealing compound to all horizontal areas so noted on the Drawings or in the Specifications. Apply immediately after final finishing. Apply this compound to non-structural construction joints of slabs on grade to act as a bond breaker prior to placement of adjacent concrete.

B. Water Curing Method: Cure all concrete that is to be water cured by either the wet burlap method, by continuous fogging or by covering with waterproof sheet.

1. Wet Burlap Method: Cover concrete surface with a double thickness of burlap, cotton mats, or other approved material, kept thoroughly saturated with water. Keep the forms wet until removed and upon removal, start the curing specified herein immediately. Cure the concrete for a period of seven (7) days for normal Portland cement or four (4) days for high early strength cement. Do not submerge concrete poured in the dry until it has attained sufficient strength to adequately sustain the stress involved and do not subject it to flowing water across its surface until it has cured four (4) days.

2. Continuous Fogging: Perform continuous fogging by fogging with a nozzle which so atomizes the flow of water that a mist, and not a spray, is formed. Fog the concrete surface regularly without allowing any part of the surface to become dry. Take all necessary precautions to prevent erosion of the concrete surface by the water.

3. Covering with Waterproof Sheets: Keep the entire area to be cured continuously wet by fogging, as specified in the fogging paragraph above, for at least 18 hours and then immediately cover with waterproof curing sheet conforming to ASTM C 171, waterproof paper, and polyethylene film, free of holes or tears. Keep sheet fully flat, without wrinkles or air bubbles, held

Attachment: Holly Hill LS_13 Rehabilitation_Bid Set Specifications_04.30.19 (2019-R-38 : Lift Station #13 Rehabilitation)

down tautly at all edges. Do not use this method on slabs which will be exposed to view.

3.04 PLACING REINFORCEMENT

A. All reinforcement shall be detailed, fabricated and erected in accordance with the A.C.I. "Manual of Standard Practice for Detailing Reinforced Concrete Structure", (A.C.I. 315), including bar supports and spacers. At splices, all reinforcing bars shall be lapped a minimum of 24 bar diameters but not less than 12 inches (12").

B. The reinforcing shall be fabricated to the shapes and dimensions shown and shall be placed where indicated on the drawing. Before placing, all reinforced steel shall be thoroughly cleaned of rust, mill scale or coatings, which would reduce or destroy the bond. Reinforcing bars shall conform to the requirements of the latest editions of the A.C.I. Code and the CRSI Manuals.

C. Wire mesh, unless otherwise shown on the drawings or specified, shall be six inches by six inches (6" x 6") No. 10 woven or electrically welded wire fabric conforming to the requirements of ASTM A 185, latest revision.

D. Space chairs and bolsters in accordance with ACI 315 and 318 using height to furnish cover over reinforcing required. Chairs with plastic feet or stainless steel shall be used in all beams and elevated slabs. Chairs for other concrete adjacent to or on the ground may be pieces of concrete block or concrete brick compressed into subgrade with the rebars bearing directly on the pointed edge of the masonry supports, or chairs set on precast concrete pads compressed into the subgrade.

E. When placed in the forms, reinforcement shall be clean and free of all loose rust, scale, dust, dirt, paint, oil, or other foreign material, and shall be accurately and securely positioned both laterally and vertically before placing concrete. Minimum clearances between the steel and face of concrete shall be maintained as shown.

F. The rebars shall be fastened together at <u>every intersection</u> or at intervals not greater than 24 bar diameters by wire ties or by some alternate method acceptable to the ENGINEER. In areas where large bars are closer together, the wire ties may be spaced not more than 30 bar diameters apart, rather than as specified above.

3.05 FORMS

A. Installation and erection shall be in accordance with ACI 347 and as specified hereinafter.

B. Forms shall conform to shape, lines and dimensions of numbers indicated, and shall be sufficiently tight to prevent leakage of mortar. They shall not deflect under dead load weight of construction as a liquid or of construction load. Forms shall be properly braced or tied together so as to maintain position and shape within specified tolerances. Construct forms so that they can be removed steadily without hammering

Attachment: Holly Hill LS_13 Rehabilitation_Bid Set Specifications_04.30.19 (2019-R-38 : Lift Station #13 Rehabilitation)

or prying against the concrete. Forms for exposed concrete shall be carefully made and accurately placed to obtain correct shape and line.

C. Forms shall be of wood, metal, or other approved materials. Metal forms shall be of a type and manufacture acceptable to the ENGINEER. Plywood, fiberboard, or absorptive type form linings may be used where appropriate. Sectional forms shall produce a uniform surface and shall be assembled in a modular pattern. Pours will not be scheduled until all erection and bracing is complete. Walers, ties and braces shall be required for all forms. Chamfer strips made from nominal dimensional one inch by one inch (1" x 1") lumber cut on the diagonal shall be installed at the top of the forms on all exposed edges of walls, slabs, beams and other structures above grade.

D. Drip edge shall be made from wood quarter round and installed where shown. Extruded plastic fillets shall be used where detailed. Circular structures shall be formed with special care, and attention to the appearance of the finished structure. Random location of fillers, non-modular sections, and excessive deviations from true circular segments shall be cause for rejection of the forms.

E. The CONTRACTOR shall be fully responsible for the adequacy of formwork in its entirety. Forms shall support required loads and shall maintain their dimensional and surface correctness to produce members required by drawings.

F. Slots, chases, recesses, or other openings as shown on the drawings or as needed for the work of any other trades shall be boxed out.

G. Box out for all temporary openings and build forms to seal them up when and as required.

H. After sealing and immediately before the placing of reinforcing, faces of all forms in contact with the concrete shall receive a thorough coating of the liquid form releasing agent, applied in compliance with the Manufacturer's instructions.

I. Reused forms shall be thoroughly cleaned out of dirt, debris, concrete and foreign matter. Forms shall not be reused if they have developed defects which would affect their tightness and strength or desired surface finish. Used forms shall not be used for architectural concrete.

J. Forms shall be removed in a manner that will prevent injury to concrete. Supporting forms or shoring shall not be removed until the members have acquired sufficient strength to support their weight and any load thereon.

K. Removal shall be in sequence as approved by the ENGINEER. Unless test cylinders warrant another procedure, the forms shall not be removed from members prior to the time listed in the schedule hereinafter unless otherwise directed.

Attachment: Holly Hill LS_13 Rehabilitation_Bid Set Specifications_04.30.19 (2019-R-38 : Lift Station #13 Rehabilitation)

L. Bonding to Existing Surfaces: Clean existing concrete surfaces that are to have new concrete bonded thereto of all grease, oil, dust, dirt and loose particles and coat with an epoxy bonding agent just prior to placing of the new concrete. Apply the bonding agent as recommended by the manufacturer and allow the agent to become tacky before the new concrete is placed. Do not allow the bonding agent to overlap or be spilled on the surfaces to be exposed after the work is completed.

3.06 FORM REMOVAL

A. Maintain formwork in place for the following structural conditions until the concrete has attained the minimum percentage of indicated design compressive strength or for the period of time specified in the following table.

Note: Time periods in the table include all days except those in which the temperature falls below 40°F.

Structural Member or Condition	**Normal Strength Concrete**	**Normal High-Early Strength Concrete**	**Minimum Compressive Strength for Form Removal (% Design Strength)**
Cantilevers	12 days	Seven (7) days	90
Over 20 feet (20') Between Supports	12 days	Seven (7) days	90
Stairway	10 days	Five (5) days	80
Floor Slabs	Five (5) days	Three (3) days	70
Free Standing Walls, Columns, and Piers	Five (5) days	Three (3) days	70
Walls, Piers, Columns, Sides of Beams, Footings, Slabs on Grade, and Vertical Surfaces	24 – 48 hours	12 – 24 hours	70
Front Face Form of Curbs	Six (6) – 24 hours	Six (6) hours	70

Attachment: Holly Hill LS_13 Rehabilitation_Bid Set Specifications_04.30.19 (2019-R-38 : Lift Station #13 Rehabilitation)

3.07 CONCRETE FINISHINGS

A. Repair of Surface Defects:

1. General: Repair surface defects, including tie holes immediately after form removal. Dampen the area to be patched and an area at least six inches (6") wide surrounding it to prevent absorption of water from the patching mortar. Notify the ENGINEER prior to commencing operations.

2. Removal of Defective Concrete: Remove all honeycombed and other defective concrete down to sound concrete. Cut edges perpendicular to the surface or slightly under cut. Sand blast surfaces to receive repair.

3. Bonding Grout: Thoroughly dampen surfaces to be patched and apply a coat of bonding grout consisting of one (1) part cement to one (1) part fine sand passing a No. 30 sieve and having the consistency of thick cream.

4. Placing Patching Mortar: After the bonding grout begins to lose its water sheen, apply a premixed patching mortar, thoroughly consolidating it into place and striking it off so as to leave the patch slightly higher than the surrounding surface. Leave mortar undisturbed for one hour to permit initial shrinkage and then finally finish.

5. Tie Holes: After being cleaned and thoroughly dampened, fill the tie holes solid with patching mortar.

B. Concrete Finishes:

1. Formed Surfaces: After removal of forms, chip off all irregular projections, grind flush with adjacent surfaces and finish concrete surfaces in accordance with the following schedule:

Attachment: Holly Hill LS_13 Rehabilitation_Bid Set Specifications_04.30.19 (2019-R-38 : Lift Station #13 Rehabilitation)

Finish Designation	Area Applied
F-1	Exterior walls below grade not exposed to water: Repair defective concrete, fill depressions deeper than two inch (2"), and fill tie holes.
F-2	Exterior and interior walls exposed to water: Repair defective concrete, remove fins, fill depressions three inch (3") or deeper, and fill tie holes.
F-3	Walls of structures of buildings exposed to view and underside of formed floors or slabs: In addition to Finish F-2, fill depressions and airholes in mortar. Dampen surfaces and then spread a slurry consisting of one (1) part cement and one and one-half (1-1/2) parts sand by damp loose volume on the surface with clean burlap pads or sponge rubber floats. Remove any surplus by scraping and then rubbing with clean burlap.
F-4	Tops of walls, beams and similar unformed surfaces occurring adjacent to formed surfaces: Strike smooth after concrete is placed and float to a texture reasonably consistent with that of formed surfaces.

2. Slab Surfaces:

   a. General: After concrete has been consolidated, finish all concrete slabs with a floated finish. After floating, trowel finish all concrete slabs, except for areas to receive roofing, insulation, tile or topping, and immediately light broom finish. Where a finish is not indicated, provide a troweled finish.

Finish Designation	Area Applied
S-1	Slabs and floors not water bearing: Smooth steel trowel finish.
S-2	Slabs and floors which are water bearing and slab surfaces on which mechanical equipment moves: Steel trowel finish free from trowel marks and all irregularities.
S-3	Slabs, floors and stair treads of structures or buildings exposed to view: Steel trowel finish without local depressions or high points and apply a light hair-broom finish. Do not use stiff bristle brooms or brushes. Leave hair-broom lines parallel to the direction of slab drainage.
S-4	Slabs and floors at slopes greater than 10 percent (10%): Steel trowel finish without local depressions or high points. Apply a stiff bristle broom finish. Leave broom lines parallel to the direction of slope drainage.
S-5	Exposed edges of slabs, floors and tops of walls: Finish with a three-inch

Attachment: Holly Hill LS_13 Rehabilitation_Bid Set Specifications_04.30.19 (2019-R-38 : Lift Station #13 Rehabilitation)

(3") radius edge if a chamfer is not indicated.

C. Floated Finish: After concrete has been placed, consolidated, struck off and leveled, do not work the surface further until water sheen has disappeared and the surface has hardened sufficiently to permit floating. During the first floating, check the planeness of the slab with a ten-foot (10') straightedge applied at no less than two (2) angles. Cut down all high spots and fill all low spots to produce a surface having the required tolerance. Then refloat the slab to a uniform sandy texture.

D. Light Broomed Finish: After floating, power trowel slabs to receive a light broomed finish to produce a smooth surface, relatively free of defects. Before the surface sets, pass a soft broom drag over the surface to produce a surface uniform in texture and appearance.

E. Troweled Finish: After floating, power trowel slabs to receive a troweled finish to produce a smooth surface, relatively free of defects. Hand trowel after the surface has hardened sufficiently. When a ringing sound is produced as the trowel is moved over the surfaces, perform final troweling by hand to produce a surface which is thoroughly consolidated, free from trowel marks, uniform in texture and appearance and plane to a tolerance of one-eighth inch (1/8") in ten feet (10') as determined by a ten-foot (10') straightedge placed anywhere on the slab in any direction.

F. Hardener Finish: Where indicated to receive a troweled hardener finish, water cure slabs without application of curing and sealing agent. When slab is at least 20 days old and thoroughly dry, apply the hardener in accordance with the manufacturer's recommendations. Where dry-shake hardener, or slip resistant finish is required, apply the hardener or slip-resistant product prior to complete curing and finishing, in accordance with the requirements and recommendations of the product manufacturer.

G. Saw Cut Joints: Cut joints that are to be saw cut not sooner than two (2) hours after the concrete is poured and not later than eight (8) hours after the pour.

3.07 TESTS

A. Compressive strength tests shall be made by breaking standard six-inch (6") diameter by 12-inch (12") high test specimens prepared, cured, and broken in accordance with the ASTM Standard Methods C 31 and C 39, latest revision. Four (4) specimen test cylinders shall be taken from each pour of five (5) cubic yards or more. One (1) additional test shall be taken from each 30 cubic yards or fraction thereof in each pour in excess of 30 cubic yards.

B. Test specimens shall be taken from manhole bottom pours of less than five (5) cubic yards as directed by the ENGINEER. Test specimens shall be taken in the presence of the ENGINEER. One (1) cylinder from each pour shall be broken at seven (7) days, the remainder at 28 days. Additional test cylinders may be ordered for determining the characteristics of a new design mix or changes in equipment or methods, and under adverse weather or curing conditions.

Attachment: Holly Hill LS_13 Rehabilitation_Bid Set Specifications_04.30.19 (2019-R-38 : Lift Station #13 Rehabilitation)

C. Slump test shall be made in accordance with ASTM C 143, latest revision, and shall be made with each load and at time of cylinders.

D. The CONTRACTOR shall supply all cylinder molds, slump cones, tools, and labor for preparing specimen, and shall provide clean, moist sand or burlap for curing. Cylinder shall not be shipped to the testing laboratory until the third day following preparation, and shall be protected from accidental damage at all times.

E. The test cylinders shall be tested in a recognized commercial testing laboratory at the expense of the CONTRACTOR.

3.08 EXPANSION JOINTS, CONSTRUCTION JOINTS AND WATER STOPS

A. Expansion Joints shall be places as indicated on the drawings. Joint materials for surfaces exposed to water and sewage shall conform to ASTM D 175, Preformed Joint Filler, non-extruding and resilient (bituminous type), thickness as shown on the drawings. Joint materials for isolation joints, slab-on-grade joints and wall joints not exposed to water and sewage shall conform to ASTM D 994, preformed expansion joint filler for concrete (bituminous type), thickness as shown on the drawings.

B. Construction Joints shall be located in accordance with a schedule of pours which shall be prepared and submitted by the CONTRACTOR. Vertical construction joints shall be held to the minimum number consistent with good standard practice.

C. Water Stops. Material for water stops shall be nine-inch (9") PVC multi-rib center-bulb type for expansion joints, and one-quarter inch by four inches (1/4" x 4") and one-eighth inch by four inches (1/8" x 4") structural steel sheets for construction joints. PVC joint material shall be as manufactured by The Burke Company, or approved equal.

END OF SECTION

Attachment: Holly Hill LS_13 Rehabilitation_Bid Set Specifications_04.30.19 (2019-R-38 : Lift Station #13 Rehabilitation)

SECTION 03 40 00

PRECAST CONCRETE

PART 1 – GENERAL

1.01 DESCRIPTION

A. Scope of Work: The work under this Section includes the design, casting, delivery, and erection of concrete structures as indicated on the Drawings.

1.02 QUALITY ASSURANCE

A. Standards: Unless otherwise indicated, all materials, workmanship and practices shall be in accordance with the current editions of the following standards:

1. Standard Building.

2. ACI 318, "Building Code Requirements for Reinforced Concrete".

3. PCI MNL 116, "Manual for Quality Control for Plants and Production of Precast Concrete Products".

1.03 SUBMITTALS

A. The following information shall be submitted for approval. Fabrication shall not begin until submission has been approved.

1. Quality Control: Satisfactory evidence shall be submitted that plant and production methods meet the requirements of PCI MNL 116.

2. Design: Complete calculations including shear, moment, buoyancy, and camber calculations shall be submitted. All computation sheets shall bear the seal of a Professional Engineer registered in the State of Florida. Design water table shall be assumed to be at finished grade.

3. Shop Drawings: Complete fabrication and erection drawings shall be submitted. All drawings shall bear the seal of a Professional Engineer registered in the State of Florida.

Attachment: Holly Hill LS_13 Rehabilitation_Bid Set Specifications_04.30.19 (2019-R-38 : Lift Station #13 Rehabilitation)

B. Manufacturer's data sheets shall be submitted on the following:

1. Joint mastic and gaskets.

2. Pipe connections.

3. Grout material.

4. Hatches and manhole covers

1.04 DELIVERY, STORAGE, AND HANDLING

A. Transportation and erection shall be done by qualified personnel using proper equipment. Lifting and supporting shall be done only at points indicated on the shop drawings.

PART 2 – PRODUCTS

2.01 MATERIALS AND FABRICATION

A. Precast Concrete Structures:

1. Design loads shall consist of dead load, live load, impact, soil loads and loads due to water table, as well as other loads which may be imposed upon the structure. Wetwells and manholes shall be designed in accordance with ASTM C 478. The minimum wall thickness for wetwells up to seven feet (7') I.D. shall be eight inches (8"). The minimum wall thickness for wetwells eight feet zero inches (8' 0") to 12 feet zero inches (12' 0") I.D. shall be ten inches (10"). The minimum wall thickness for four foot (4') I.D. manholes shall be six inches (6"). The minimum wall thickness for valve vaults shall be six inches (6").

2. Forms used for precast concrete shall be of metal and sufficiently designed and braced to maintain their alignment under pressures of the concrete during placing. Base and first section of precast structures shall be an integral cast.

3. Aggregates: All aggregates, fine and coarse, other than lightweight aggregate shall conform to ASTM C 33. Lightweight aggregates, fine and coarse, shall conform to ASTM C 330. Aggregates shall be free of deleterious substances causing reactivity with oxidized hydrogen sulfide. Both types of aggregate shall be graded in a manner so as to produce a homogenous concrete mix. All materials are to be accurately weighed at a central batching facility for mixing.

4. Cement shall be Portland cement Type II.

Attachment: Holly Hill LS_13 Rehabilitation_Bid Set Specifications_04.30.19 (2019-R-38 : Lift Station #13 Rehabilitation)

5. Minimum compressive strength of concrete used for precast concrete structures shall be 4000 psi at 28 days.

6. Placing. All concrete shall be handled from the mixer or transport vehicle to the place of final deposit in a continuous manner, as rapidly as practicable, and without segregation or loss of ingredients, until the approved unit is completed. Maximum elapsed time from batching to placement shall be two (2) hours. Concrete shall be placed in layers not over two feet (2') deep. Each layer shall be compacted by mechanical internal or external vibrating equipment. Duration of the vibration cycle shall be limited to the time necessary to produce satisfactory consolidation without causing objectionable segregation.

7. Curing:

   a. For purposes of early reuse of forms, precast concrete may be steam cured after an initial set has taken place. The steam temperature shall not exceed 160°F, and the temperature shall be raised from normal ambient temperatures at a rate not to exceed 40°F per hour.

   b. The steam cured unit shall not be removed from the forms until sufficient strength is obtained for the unit to withstand any structural strain to which it may be subjected during the form stripping operation. After the stripping of forms, further curing by means of water spraying or a membrane curing compound may be used, and shall be of a clear or white type, conforming to ASTM C 309.

8. Reinforcing steel shall be sufficiently tied to withstand any displacement during the pouring operation. All bars shall be Grade 60.

9. Joints shall be tongue and groove pipe ends sealed with round or other flexible type natural rubber joint ring gaskets in conformance with ASTM C 433 or by a flexible performed bitumastic sealing material equal to Ram-Nek as manufactured by R.K. Snyder and Co., Houston, Texas. If rubber joint ring gaskets are used, interior and exterior voids in the pipe joints shall be sealed with flexible sealing material specified above, installed in strict accordance with the manufacturer's printed instructions. If manhole sections are sealed with a flexible preformed bitumastic sealing material, adequate material shall be applied so that "squeeze out" occurs at the interior and exterior of the joint. Rubber joint ring gaskets and flexible preformed bitumastic sealing material shall be provided by the manhole manufacturer.

10. Eccentric precast concrete cone sections shall be manufactured of precast concrete with reinforcing and joints as specified above for straight riser.

Attachment: Holly Hill LS_13 Rehabilitation_Bid Set Specifications_04.30.19 (2019-R-38 : Lift Station #13 Rehabilitation)

11. Lifting holes through the structures are not permitted. Equally spaced lifting lugs, rings or non-penetrating lift inserts shall be provided.

12. Top slabs for shallow manholes, valve vaults, and pumping station wet wells may be precast or cast-in-place. Steel reinforcing shall be as required for the dead load of the slab plus an H-20 designation live load. Concrete for top slabs shall have a compressive strength of 4000 psi at 28 days. Thickness of concrete for top slabs shall be a minimum of six inches (6") for shallow manholes and valve vaults and eight inches (8") for pumping station wet wells.

13. Manholes inverts shall be precast into the manhole base section by the manhole manufacturer unless prior approval is obtained from the ENGINEER to construct inverts in the field. The drop from inlet to outlet shall be a minimum of one inch unless approved by the ENGINEER. The channel height of the manhole invert shall match the crown of the exit sewer. Manhole benches shall be sloped a minimum of one inch per foot from the outside periphery of the manhole to the edge of the invert channel.

B. Sealing Compound and Grout: Plastic sealing compound shall comply with Federal Specification SS-SS-00210. Mortar shall comply with ASTM C 387, Type S, or use grout complying with Section 03 60 00.

C. Pipe Connections:

1. Pipe connections for wet wells and manholes shall be resilient, waterproof connections designed in accordance with ASTM C 923 “Resilient Connectors Between Reinforced Concrete Manhole Structures and Pipes”. Resilient pipe connectors shall either be cast into the manhole wall or installed following casting in a cored section of the manhole wall. Resilient connectors shall either be a gasket type connector equal to the A-Lok pipe to manhole seal as manufactured by Atlantic Concrete Products, Inc., or a flexible neoprene boot with stainless steel clamps equal to KOR-N-Seal System as manufactured by the Dukor Corporation. When the pipe is installed in the resilient manhole connector, the pipe shall be capable of 20-degree minimum deflection in any direction.

2. Pipe connections for wall penetrations for valve vaults and for manholes and wetwells where resilient connectors cannot be used shall be provided with wall sleeves and link seals or as specified in Section 46 05 04.

D. Frames and Covers: Cast iron manhole frames and covers shall be provided for manholes and aluminum access hatches shall be provided for wetwells and valve vaults as specified below:

Attachment: Holly Hill LS_13 Rehabilitation_Bid Set Specifications_04.30.19 (2019-R-38 : Lift Station #13 Rehabilitation)

1. Standard Manhole Frames and Covers: Shall be gray iron castings conforming to ASTM A 48, Class 30B for Gray Iron Castings; and shall be smooth, true to pattern, free from blow holes, sand holes, projections, and other harmful defects. The seating surfaces of both the frame and cover shall be machined so that the cover will not rock after it has been seated. The cover shall be provided with a precisely machined dovetail groove with a neoprene O-ring gasket to provide a self-sealing cover. The gasket shall be glued in place at the foundry. The manhole cover shall be solid with two non-penetrating pick holes. Manholes frames and covers shall be coated on all non-machined surfaces with three coats of coal tar epoxy as specified for the Class 7 Coating System in Section 09 91 00. Manhole frames and covers shall be U.S. Foundry and Manufacturing Corp. No. 38B, Ref. Cat. No. 225, Neenah Foundry Company No. R-1642 with a Type "B" cover or an equal approved by the ENGINEER.

   a. Anchor Bolts: Anchor bolts for bolting manhole frame to precast manholes shall be three-quarter inch (3/4") diameter galvanized all thread steel rods with a five-inch (5") hook for embedment in the precast manhole. The bolts shall be of sufficient length to provide a minimum two-inch (2") thread projection through the flange of the manhole frame. Two (2) anchor bolts shall be cast into the precast manhole top section or slab, positioned at 180 degrees, at the time of manufacturer. Manhole frames shall be drilled to match the bolt settings prior to coating.

2. Aluminum Access Hatches: Aluminum hatches shall be provided for wetwells and valve vaults sized as indicated on the Drawings. Access hatches shall be a specified in Section 33 32 20.

E. Coatings:

1. Interior and exterior surfaces of precast structures shall be coated with a primer coat and three finish coats of coal tar epoxy as specified in Section 09 91 00.

PART 3 – EXECUTION

3.01 INSTALLATION

A. Earthwork: The CONTRACTOR shall prepare an excavation large enough to accommodate the structure and permit sealing of openings, waterproofing, and backfilling operations. Earthwork shall conform to the applicable sections of Division 2.

B. Installation of Precast Concrete Structures: Precast concrete structures shall be constructed in a workmanlike manner at the locations and dimensions indicated on

Attachment: Holly Hill LS_13 Rehabilitation_Bid Set Specifications_04.30.19 (2019-R-38 : Lift Station #13 Rehabilitation)

the Drawings. Precast structures shall be set on foundation of crushed stone, 12 inches (12") thick. Crushed stone material shall be a well graded crushed stone or crushed gravel meeting the requirements of ASTM C 33, Gradation No. 67 [three-quarter inch (3/4") to No. 4 sieve]. The precast structures shall be constructed such that the structure will not transmit dead or live loads to the piping. Care shall be taken to prevent earth and other material from entering precast structures.

C. Sealing and Grouting: Fill all interior and exterior joints between precast sections with a joint sealant, as recommended by the structure manufacturer.

D. Installing Precast Sections:

1. Set each precast concrete unit plumb on a bed of sealant to make a watertight joint at least two-inch (2") thick with the concrete base or with a preceding unit. Point the inside joint and wipe off the excess sealant.

2. Assemble units so that the cover conforms to the elevations shown on the Drawings.

3. Pipe connections at precast structures shall be provided at the locations shown on the Drawings. Connections shall be resilient and waterproof.

4. All voids in interior and exterior manhole section joints and lift holes for manhole sections shall be filled with a non-shrinking, non-metallic grout. Grout shall be applied and cured in strict accordance with the manufacturer's recommendations. The grout shall be finished smooth and flush with the wall surface of the manhole.

E. Manhole Flow Channels and Bench Walls:

1. Unless prior approval is obtained from the ENGINEER, manhole flow channels (inverts) and bench walls shall be precast into the manhole base section as specified above.

2. Upon prior approval from the ENGINEER, manhole inverts may be constructed in the field. Invert channel bottoms shall be smooth and semicircular in shape conforming to inside of adjacent sewer sections. Changes in direction of flow shall be made with a smooth curve of as large radium as the size of manhole will permit. Changes in size and grade of channels shall be made gradually and evenly to give a smooth uninterrupted flow pattern through the manhole. Channel height shall match the crown of the connection sewer pipe exiting the manhole. Manhole bench walls shall be smooth and shall slope one inch per foot from the edge of the invert channel to the precast manhole wall. Invert channels may be constructed by forming in concrete or by building up brick and mortar to form the manhole bench walls on each side of the channel, and plastering over bricks with

Attachment: Holly Hill LS_13 Rehabilitation_Bid Set Specifications_04.30.19 (2019-R-38 : Lift Station #13 Rehabilitation)

cement mortar with a minimum thickness of two inches (2"). Manhole invert construction shall only be performed by experienced and qualified workmen.

3. Bricks used to construct manhole invert channels and bench walls shall be standard size [22 inches high by four inches wide by eight inches long (22" H x 4" W x 8" L] brick in conformance with ASTM C 32 "Sewer and Manhole Brick (Made from Clay and Shale)", Grade MS. Mortar used for masonry work shall be prepared by thoroughly mixing: One (1) volume of Type II Portland Cement with three (3) volumes of sand and sufficient clean water to produce a rich mass of approved consistency. Mixing mortar on the ground or any paved surface shall not be permitted. Sand to be used in making mortar shall be clean, well-graded, and shall pass a standard No. 4 sieve.

F. Setting Frames and Covers:

1. Unless otherwise indicated on the Drawings, in unpaved areas the tops of manholes shall be set 0.2 feet (0.2') above finished grade and the tops of wetwells and valve vaults shall be set 0.5 feet (0.5') above finished grade.

2. The top of all precast manholes may be brought to proper grade for receiving manhole frame by using not more than three courses of brick or precast concrete grade rings. Bricks and mortar used for manhole top grade adjustments shall be a specified above in Paragraph 3.01.E.3. Precast concrete grade rings shall be precast with steel reinforcement in conformance with ASTM C 478 and concrete with a compressive strength of 4000 psi in 28 days. Precast concrete grade rings shall be manufactured in half annular shapes for ease of handling. The grade ring dimensions shall be two inches (2") thick with an annular width of eight inches (8") and an inside diameter of 24 inches (24").

3. Masonry construction shall be performed by experienced and qualified workmen only. All work shall be laid plumb, straight, level, square and true. Brick shall be laid in full beds of mortar and shoved into place. All joints shall be full and not more than two inches (2") in thickness. The CONTRACTOR shall set in place and bond in the masonry all necessary anchor bolts and miscellaneous items specified elsewhere. The masonry walls shall be plastered on the inside and outside with a one-half inch coat of Portland Cement mortar.

4. Following curing of any masonry construction required for manhole top adjustment, set manhole frame in a bed of three- to two-inch (3-2") thick flexible bitumastic sealing material (Ram-Nek) and anchor in place with two (2) three-quarter inch (3/4") diameter anchor bolts, which shall be securely embedded in the top of the manhole. Seal the flange of the manhole ring to the top of the manhole with cement mortar.

Attachment: Holly Hill LS_13 Rehabilitation_Bid Set Specifications_04.30.19 (2019-R-38 : Lift Station #13 Rehabilitation)

G. Interior Lining: The interior coating system shall be applied following installation of the precast structures and any piping or equipment which will penetrate or attach to the walls. Surface preparation and application of the coating system shall be in strict accordance with the manufacturer's recommendations. Refer to Section 09 91 00 for additional specifications.

H. Backfill: After the structure and all appurtenances are in place and approved, backfill shall be placed to the original ground line or to the limits designated on the Drawings. Backfill material shall consist of sand or loose earth, free from stones, clods, or other deleterious material. It shall be placed in horizontal layers not exceeding 12 inches (12") in depth, and shall be moistened and thoroughly compacted to a minimum relative density.

END OF SECTION

Attachment: Holly Hill LS_13 Rehabilitation_Bid Set Specifications_04.30.19 (2019-R-38 : Lift Station #13 Rehabilitation)

SECTION 03 60 00

GROUTING

PART 1 – GENERAL

1.01 WORK INCLUDED

A. Provide all labor, materials, tools, and equipment and perform all grouting as specified hereinafter and indicated on the Drawings.

1.02 RELATED WORK

A. Section 03 30 00: Cast-In-Place and Poured Concrete.

1.03 SUBMITTALS

A. Submit manufacturer's literature for review on the following items:

1. Non-shrink grout data including grout properties, mixing, surface preparation, and installation instructions.

1.04 DELIVERY AND STORAGE

A. Deliver and store grouting materials in unbroken containers with seals and labels intact as packaged by the manufacturer.

PART 2 – PRODUCTS

2.01 MATERIALS

A. Non-shrink, Nonmetallic Grout: The Burke Company's Non-Ferrous, Non-Shrink Grout, Sauereisen F-100 Level Fill, Master Builders Masterflow 713, Euclid NS Grout, or equal pre-mixed type.

B. Non-shrink Metallic Grout: The Burke Company's Metallic Spec Grout, Master Builders Embeco 636 Grout pre-mixed type, or equal.

C. Epoxy Grout: Sikadur 42 Grout-Pak, or equal, for grouting sleeves for anchor bolts, etc.

Attachment: Holly Hill LS_13 Rehabilitation_Bid Set Specifications_04.30.19 (2019-R-38 : Lift Station #13 Rehabilitation)

PART 3 – EXECUTION

3.01 PREPARATION

A. Clean all bonding surfaces or dust and oil.

3.02 INSTALLATION

A. Non-shrink Grout:

1. Use non-shrink, nonmetallic grout for grouting precast concrete wall panel connections, column base plates, anchor bolts, reinforcing bars, pipe sleeves, machinery supports and pump base plates. Use epoxy grout for anchor bolts, etc., where indicated on the Drawings.

2. Mix and place non-shrink grout as recommended by the manufacturer.

3. Mix grout as close to the work area as possible and transport quickly to its final position in a manner which will not permit segregation of materials.

4. Cure non-shrink grout with water saturated burlap for at least three (3) days or with an application of Super Rez Seal cure and seal compound applied immediately after grout placement.

5. Do not operate machinery set on grout pads until the grout has cured for at least 24 hours.

END OF SECTION

Attachment: Holly Hill LS_13 Rehabilitation_Bid Set Specifications_04.30.19 (2019-R-38 : Lift Station #13 Rehabilitation)

SECTION 09 91 00

PAINTING

PART 1 – GENERAL

1.01 Scope

A. This specification defines the methods of surface preparation, coating systems, and methods of application for painting as outlined herein.

B. The CONTRACTOR shall furnish all supervision, labor, tools, materials, equipment, scaffolding or other structures, and supervision required for the transportation, unloading, storage, and application of the paint and associated products covered by this specification.

C. The work includes painting and finishing of interior and exterior exposed items above and below grade surfaces, such as structural steel, miscellaneous metals, ceilings, walls, floors, doors, frames, pipe, handrails, posts, fittings, valves, pumps, tanks, equipment, and all other work obviously required to be painted unless otherwise specified herein or on the drawings. The omission of minor items in the schedule of work shall not relieve the CONTRACTOR of his obligation to include such items where they come within the general intent of the specification as stated herein.

D. The following items will not be painted:

1. Any code requiring labels, such as Underwriters' Laboratories and Factory Mutual, or any equipment identification, performance rating, name, or nomenclature plates.

2. Any moving parts of operating units, mechanical and electrical parts, such as valve and damper operators, linkages, sinkages, sensing devices, motor, and fan shafts, unless otherwise indicated.

3. Aluminum handrails, walkways, windows, louvers, and grating unless otherwise specified herein.

4. Signs and nameplates.

5. Finish hardware.

6. Stainless steel angles, tubes, pipe, etc.

7. Products with polished chrome, aluminum, nickel, or stainless steel finish.

Attachment: Holly Hill LS_13 Rehabilitation_Bid Set Specifications_04.30.19 (2019-R-38 : Lift Station #13 Rehabilitation)

8. Plastic switch plates and receptacle plates.

9. Flexible couplings, lubricated bearing surfaces, insulation, and metal and plastic pipe interior.

10. Sprinkler heads.

E. All work shall be done in strict accordance with this specification, the design drawings, and the painting package, including manufacturer's printed instructions.

F. The CONTRACTOR will obtain, at its own expense, all permits, licenses, and inspections and shall comply with all laws, codes, ordinances, rules, and regulations promulgated by authorities having jurisdiction, which may bear on the work. This compliance will include Federal Public Law 91-596 more commonly known as the "Occupational Safety and Health Act of 1970."

G. Wherever the word "ENGINEER" occurs in this specification, it shall apply to the authorized representative of Mead & Hunt, Inc. Where the word "CONTRACTOR" occurs in this specification, it shall apply to the CONTRACTOR performing any part of or all of this work.

H. Surfaces to be painted (Refer to 17.0 Coating Schedule for description of surfaces to be painted and their specified coating systems and colors).

1.02 Definitions

A. Field Painting is the painting of new or rebuilt items at the job site. Field painting shall be the responsibility of the CONTRACTOR.

B. Shop Painting is the painting of new or rebuilt items in the shop prior to delivery to the jobsite.

1.03 Abbreviations

A. The abbreviations and definitions listed below, when used in this specification, shall have the following meanings:

1. SSPC – Society for Protective Coatings.

2. Exterior – Outside, exposed to weather.

3. Interior Dry – Inside, <u>not</u> subject to immersion service.

4. Interior Wet – Inside, subject to immersion service.

5. ASTM – American Society of Testing Materials.

Attachment: Holly Hill LS_13 Rehabilitation_Bid Set Specifications_04.30.19 (2019-R-38 : Lift Station #13 Rehabilitation)

6. NACE – National Association of Corrosion Engineers.

7. NSF – National Sanitation Foundation.

8. AWWA – American Water Works Associates.

PART 2 – RESOLUTION OF CONFLICTS

A. It shall be the responsibility of the CONTRACTOR to arrange a meeting prior to the start of painting, or flooring installation between the Contractors, the Paint Manufacturer whose products are to be used, and the ENGINEER. All aspects of surface preparation, application and coating systems as covered by this specification will be reviewed at this meeting.

B. Clarification shall be requested promptly from the ENGINEER when instructions are lacking, conflicts occur in the specification, or the procedure seems improper or inappropriate for any reason.

C. Copies of all manufacturer's instructions and recommendations shall be furnished to the ENGINEER by the Painting Contractor.

D. It shall be the responsibility of the Coating Manufacturer to have their factory representative meet in person with the CONTRACTOR and ENGINEER a minimum of three times during the job as a consultant on surface preparation, mil thickness of coating and proper application of coating unless meeting is determined to be unnecessary by the ENGINEER.

PART 3 – INSPECTION OF SURFACES

A. Before application of the prime coat and each succeeding coat, all surfaces to be coated shall be subject to inspection by the ENGINEER. Any defects or deficiencies shall be corrected by the CONTRACTOR before application of any subsequent coating.

B. Samples of surface preparation and of painting systems shall be furnished by the CONTRACTOR to be used as a standard throughout the job, unless omitted by the ENGINEER.

C. When any appreciable time has elapsed between coatings, previously coated areas shall be carefully inspected by the ENGINEER, and where, in his opinion, surfaces are damaged or contaminated, they shall be cleaned and recoated at the CONTRACTOR's expense. Recoating times of manufacturer's printed instructions shall be adhered to.

D. Coating thickness shall be determined by the use of a properly calibrated "Nordson-Mikrotest" "Positest" Coating Thickness Gauge (or equal) for ferrous

Attachment: Holly Hill LS_13 Rehabilitation_Bid Set Specifications_04.30.19 (2019-R-38 : Lift Station #13 Rehabilitation)

metal or an OG232 "Tooke" Paint Inspection gauge (or equal) for non-ferrous and cementitious surfaces. Please note that use of the "tooke" gauge is classified as a destructive test.

PART 4 – EQUIPMENT

A. Effective oil and water separators shall be used in all compressed air lines serving spray painting and sandblasting operations to remove oil or moisture from the air before it is used. Separators shall be placed as far as practical from the compressor.

B. All equipment for application of the paint and the completion of the work shall be furnished by the CONTRACTOR in first-class condition and shall comply with recommendations of the paint manufacturer.

C. CONTRACTOR will provide free of charge to the ENGINEER a "Nordson-Mikrotest" or "Positest" dry film thickness gauge for ferrous metal and an OG232 "Tooke" gauge or equal for non-ferrous and cementitious surface, to e used to inspect coatings by the ENGINEER and CONTRACTOR. The gauges may be used by the CONTRACTOR and returned each day to the ENGINEER. ENGINEER will return gauges to CONTRACTOR at completion of job.

PART 5 – MATERIALS

A. All materials specified herein are manufactured by the TNEMEC Company, Inc., Xypex Chemical Corporation, or Chemprobe Technologies, Inc. These products are specified to establish standards of quality and are approved for use on this project.

B. Equivalent materials of other manufacturers may be substituted on approval of the ENGINEER. Requests for substitution shall include Manufacturer's literature for each product giving the name, generic type, descriptive information and evidence of satisfactory past performance and an independent laboratory certification that their product meets the performance criteria of the specified materials. Unless otherwise noted, the latest revision of listed specifications shall be used.

1. Abrasion – Fed. Test Method Std. No. 141, Method 6192, CS-17 Wheel, 1,000 grams load.

2. Adhesion – Elcometer Adhesion Tester.

3. Exterior Exposure – Exposed at 45 degrees (45°) facing the ocean (South Florida MarineExposure).

4. Hardness – ASTM D 3363.

Attachment: Holly Hill LS_13 Rehabilitation_Bid Set Specifications_04.30.19 (2019-R-38 : Lift Station #13 Rehabilitation)

5. Humidity – ASTM D 2247.

6. Salt Spray (Fog) – ASTM B 117.

C. Bidders desiring to use coatings other than those specified shall submit their proposal in writing to the ENGINEER at least 10 days prior to the bid opening. Substitutions which decrease the film thickness, the number of coats applied, change the generic type of coating, or fail to meet the performance criteria of the specified materials will not be approved. Prime and finish coats of all surfaces shall be furnished by the same manufacturer.

D. All coatings to be shop applied must meet the requirements for volatile organic compounds (VOC) of not more than three and a half (3.5) lbs/Gallon after thinning.

E. Colors, where not specified, shall be as selected by the OWNER or their Representative.

F. All coatings in contact with potable water need to be NSF Certified in accordance with ANSI/NSF Standard 61.

PART 6 – WORKMANSHIP AND MATERIALS

A. Surface Preparation

1. The surface shall be cleaned as specified for the paint system being used. All cleaning shall be as outlined in the Steel Structures Painting Council's Surface Preparation Specification, unless otherwise noted. If surfaces are subject to contamination, other than mill scale or normal atmospheric rusting, the surfaces shall be pressure washed, and acid or caustic pH residues neutralized, in addition to the specified surface preparation.

B. Standards for Surface Preparation

1. SSPC-SP1 Chemical and/or Solvent Cleaning

a. Remove all grease, oil, salt, acid, alkali, dirt, dust, wax, fat, foreign matter, and contaminants, etc. by one of the following methods: steam cleaning, alkaline cleaning, or volatile solvent cleaning.

2. SSPC-SP2 Hand Tool Cleaning

a. Removal of loose rust, loose mill scale, and loose paint to a clean sound substrate by hand chipping, scraping, sanding, and wire brushing.

Attachment: Holly Hill LS_13 Rehabilitation_Bid Set Specifications_04.30.19 (2019-R-38 : Lift Station #13 Rehabilitation)

3. SSPC-SP3 Power Tool Cleaning

   a. Removal of loose rust, loose mill scale, and loose paint to a clean sound substrate by power tool chipping, descaling, sanding, wire brushing, and grinding.

4. SSPC-SP4 Flame Cleaning

   a. Dehydrating and removal of rust, loose mill scale, and some light mill scale by use of flame, followed by wire brushing.

5. SSPC-SP5 (NACE-1) White Metal Blast Cleaning

   a. Complete removal of all mill scale, rust, rust scale, previous coating, etc., leaving the surface a uniform gray-white color.

6. SSPC-SP6 (NACE-3) Commercial Grade Blast Cleaning

   a. Complete removal of all dirt, rust scale, mill scale, foreign matter, and previous coatings, etc., leaving only shadows and/or streaks caused by rust stain and mill scale oxides. At least 66 percent (66%) of each square inch of surface area is to be free of all visible residues, except slight discoloration.

7. SSPC-SP7 (NACE-4) Brush-Off Blast Cleaning

   a. Removal of rust scale, loose mill scale, loose rust, and loose coatings, leaving tightly bonded mill scale, rust and previous coatings. On concrete surfaces, brush-off blast cleaning shall remove all laitance, form oils, and solid contaminants. Blasting should be performed sufficiently close to the surface so as to open up surface voids, bug holes, air pockets, and other subsurface irregularities, but so as not to expose underlying aggregate.

8. SSPC-SP8 Pickling

   a. Complete removal of rust and mill scale by acid pickling, duplex pickling, or electrolytic pickling (may reduce the resistance of the surface to corrosion, if not to be primed immediately).

9. SSPC-SP10 (NACE-2) Near-White Blast Cleaning

   a. Removal of all rust scale, mill scale, previous coating, etc., leaving only light stains from rust, mill scale, and small specks of previous coating. At least 95 percent (95%) of each square inch of surface

Attachment: Holly Hill LS_13 Rehabilitation_Bid Set Specifications_04.30.19 (2019-R-38 : Lift Station #13 Rehabilitation)

area is to be free of all visible residues and the remainder shall be limited to slight discoloration.

10. SSPC-SP11 Power Tool Cleaning to Bare Metal

    a. Complete removal of rust, rust scale, mill scale, foreign matter, and previous coatings, etc., to a standard as specified on a Commercial Grade Blast Cleaning (SSPC-SP6, NACE-3) by means of power tools that will provide the proper degree of cleaning and surface profile.

11. SSPC-SP13 (NACE-6) Surface Preparation of Concrete

    a. Surface preparation of concrete by mechanical, chemical, or thermal methods prior to the application of bonded protective coating or lining systems.

C. Visual standards

1. SSPC-VIS-1 (Swedish SIS OS 5900), "Pictorial Surface Preparation Standards for Painting Steel Surfaces," and the National Association of Corrosion Engineers, "Blasting Cleaning Visual Standards" TM-01-70 and TM-01-75 shall be considered as standards for proper surface preparation.

2. Oil, grease, soil, dust, etc., deposited on the surface preparation that has been completed shall be removed prior to painting according to SSPC-SP1 Solvent Cleaning.

3. Weld flux, weld spatter and excessive rust scale shall be removed by Power Tool Cleaning as per SSPC-SP11.

4. All weld seams, sharp protrusions, and edges shall be ground smooth prior to surface preparation or application of any coatings.

5. All areas requiring field welding shall be masked off prior to shop coating, unless waived by the ENGINEER.

6. All areas which require field touch-up after erection, such as welds, burnbacks, and mechanically damaged areas, shall be cleaned by thorough Power Tool as specified in SSPC-SP11.

7. Touch-up systems will be same as original specification except that approved manufacturer's organic zinc-rich shall be used in lieu of inorganic zinc where this system was originally used. Also, strict adherence to manufacturer's complete touch-up recommendations shall be followed. Any questions relative to compatibility of products shall be

Attachment: Holly Hill LS_13 Rehabilitation_Bid Set Specifications_04.30.19 (2019-R-38 : Lift Station #13 Rehabilitation)

brought to the ENGINEER's attention; otherwise, CONTRACTOR assumes full responsibility.

PART 7 – PRE-TREATMENTS

A. When specified, the surface shall be pretreated in accordance with the specified pretreatment prior to application of the prime coat of paint.

PART 8 – STORAGE

A. Materials shall be delivered to the job site in the original packages with seals unbroken and with legible unmutilated labels attached. Packages shall not be opened until they are inspected by the ENGINEER and required for use. All painting materials shall be stored in a clean, dry, well-ventilated place, protected from sparks, flame, and direct rays of the sun or from excessive heat. Paint susceptible to damage from low temperatures shall be kept in a heated storage space when necessary. The CONTRACTOR shall be solely responsible for the protection of the materials stored by himself at the job site. Empty coating cans shall be required to be neatly stacked in areas designated by the ENGINEER and removed from the job site on a schedule determined by the ENGINEER. ENGINEER may request a notarized statement from CONTRACTOR detailing all materials used on the project.

PART 9 – PREPARATION OF MATERIALS

A. Mechanical mixers, capable of thoroughly mixing the pigment and vehicle together, shall mix the paint prior to use where required by manufacturer's instructions; thorough hand mixing will be allowed for small amounts up to one gallon. Pressure pots shall be equipped with mechanical mixers to keep the pigment in suspension, when required by manufacturer's instructions. Otherwise, intermittent hand mixing shall be done to assure that no separation occurs. All mixing shall be done in accordance with SSPC Vol. 1, Chapter 4, "Practical Aspects, Use and Application of Paints" and/or with manufacturer's recommendations.

B. Catalysts or thinners shall be as recommended by the manufacturer and shall be added or discarded strictly in accordance with the manufacturer's instruction.

PART 10 – APPLICATION

A. Paint shall be applied only on thoroughly dry surfaces and during periods of favorable weather, unless otherwise allowed by the paint manufacturer. Except as provided below, painting shall not be permitted when the atmospheric temperature is below 50°F, or when freshly painted surfaces may be damaged by rain, fog, dust, or condensation, and/or when it can be anticipated that these conditions will prevail during the drying period.

Attachment: Holly Hill LS_13 Rehabilitation_Bid Set Specifications_04.30.19 (2019-R-38 : Lift Station #13 Rehabilitation)

B. No coatings shall be applied unless surface temperature is a minimum of 5°F above dew point; temperature must be maintained during curing.

DEW POINT CALCULATION CHART

Ambient Air Temperature – Fahrenheit

Relative Humidity	20	30	40	50	60	70	80	90	100	110	120
90%	18	28	37	47	57	67	77	87	97	107	117
85%	17	26	36	45	55	65	76	84	95	103	113
80%	16	25	34	44	54	63	73	82	93	102	110
75%	15	24	33	42	52	62	71	80	91	100	108
70%	13	22	31	40	50	60	68	78	88	96	105
65%	12	20	29	38	47	57	66	76	85	93	103
60%	11	29	27	36	45	55	64	73	83	92	101
55%	9	17	25	34	43	53	61	70	80	89	98
50%	6	15	23	31	40	50	59	67	77	86	94
45%	4	13	21	29	37	47	56	64	73	82	91
40%	1	11	18	26	35	43	52	61	69	78	87
35%	-2	8	16	23	31	40	48	57	65	74	83
30%	-6	4	13	20	28	36	44	52	61	69	77

SURFACE TEMPERATURE AT WHICH CONDENSATION OCCURS

C. Dew Point

1. Temperature at which moisture will condense on surface. No coatings should be applied unless surface temperature is a minimum of 5°F above this point. Temperature must be maintained during curing.

Attachment: Holly Hill LS_13 Rehabilitation_Bid Set Specifications_04.30.19 (2019-R-38 : Lift Station #13 Rehabilitation)

D. Example.

1. If air temperature is 70°F and relative humidity is 65 percent (65%), the dew point is 57°F. No coating should be applied unless surface temperature is 62°F minimum.

E. No coatings shall be applied unless the relative humidity is below 85 percent (85%).

F. Suitable enclosures to permit painting during inclement weather may be used if provisions are made to control atmospheric conditions artificially inside the enclosure, within limits suitable for painting throughout the painting operations.

G. Field Painting in the immediate vicinity of, or on, energized electrical and rotating equipment, and equipment and/or pipes in service shall not be performed without the approval of the ENGINEER.

H. Extreme care shall be exercised in the painting of all operable equipment, such as valves, electric motors, etc., so that the proper functioning of the equipment will not be affected.

I. The CONTRACTOR's scaffolding shall be erected, maintained, and dismantled without damage to structures, machinery, equipment, or pipe. Drop cloths shall be used where required to protect buildings and equipment. All surfaces required to be clear for visual observations shall be cleaned immediately after paint application.

J. Painting shall not be performed on insulated pipe within three (3) feet of insulation operations or on insulation where covering and surface coat have not had time to set and dry. Painting shall not be performed on uninsulated pipe within one (1) foot of any type of connection until the connection has been made, except as directed by the ENGINEER.

K. The prime coat shall be applied immediately following surface preparation and in no case later than the same working day. All paint shall be applied by brushing, paint mitt and roller, conventional spraying, or airless spraying, using equipment approved by the paint manufacturer.

L. Each coat of paint shall be recoated as per manufacturer's instructions. Paint shall be considered recoatable when an additional coat can be applied without any detrimental film irregularities such as lifting or loss of adhesion.

M. Surfaces that will be inaccessible after assembly shall receive either the full specified paint system or three shop coats of the specified primer before assembly.

Attachment: Holly Hill LS_13 Rehabilitation_Bid Set Specifications_04.30.19 (2019-R-38 : Lift Station #13 Rehabilitation)

N. Finish colors shall be in accordance with the COLOR SCHEDULE and shall be factory mixed (i.e., there shall be no tinting by the CONTRACTOR, unless authorized by the ENGINEER).

O. All edges and weld seams in immersion service shall receive a "stripe coat" (applied by brush) of the 1st coat prior to application of the full 1st coat.

P. All open seams in the roof area of tanks shall be filled after application of the topcoat with a flexible caulking such as Sika Flex 1A.

PART 11 – WORKMANSHIP

A. The CONTRACTOR must show proof that all employees associated with this project shall have been employed by the CONTRACTOR for a period not less than six (6) months.

B. Painting shall be performed by experienced painters in accordance with the recommendations of the paint manufacturer. All paint shall be uniformly applied without sags, runs, spots, or other blemishes. Work, which shows carelessness, lack of skill, or is defective in the opinion of the ENGINEER, shall be corrected at the expense of the CONTRACTOR.

C. The CONTRACTOR shall provide the names of at least 6 other projects of similar size and scope that they have successfully completed under their current company name.

D. Application of Paint

1. By Brush and/or Rollers.

a. Top quality, properly styled brushes and rollers shall be used. Rollers with a baked phenohl core shall be utilized.

b. The brushing or rolling shall be done so that a smooth coat as nearly uniform in thickness as possible is obtained. Brush or roller strokes shall be made to smooth the film without leaving deep or detrimental marks.

c. Surfaces not accessible to brushes or rollers may be painted by spray, by dauber or sheepskins, and paint mitt.

d. It may require two (2) coats to achieve the specified dry film thickness if application is by brush and roller.

Attachment: Holly Hill LS_13 Rehabilitation_Bid Set Specifications_04.30.19 (2019-R-38 : Lift Station #13 Rehabilitation)

2. Air, Airless, or Hot Spray.

   a. The equipment used shall be suitable for the intended purpose, shall be capable of properly atomizing the paint to be applied and shall be equipped with suitable pressure regulators and gauges.

   b. Paint shall be applied in a uniform layer, with a 50 percent (50%) overlap pattern. All runs and sags should be brushed out immediately or the paint shall be removed and the surface resprayed.

   c. High build coatings should be applied by a crosshatch method of spray application to ensure proper film thickness of the coating.

   d. Areas inaccessible to spray shall be brushed; if also inaccessible to brush, daubs or sheepskins shall be used, as authorized by the manufacturer.

   e. Special care shall be taken with thinners and paint temperatures so that paint of the correct formula reaches the receiving surface.

   f. Nozzles, tips, etc., shall be of sizes and designs as recommended by the manufacturer of the paint being sprayed.

   g. The first coat on concrete surfaces in immersion service should be sprayed and backrolled.

PART 12 – PROTECTION AND CLEAN-UP

A. It shall be the responsibility of the CONTRACTOR to protect at all times, in areas where painting is being done, floors, materials of other crafts, equipment, vehicles, fixtures, and finished surfaces adjacent to paint work. Cover all electric plates, surface hardware, nameplates, gauge glasses, etc., before start of painting work.

B. At the option of the ENGINEER during the course of this project, the CONTRACTOR will contain all spent abrasives, old paint chips, paint overspray and debris by means suitable to the ENGINEER, including but not limited to, full shrouding of the area.

C. If shrouding is required, the CONTRACTOR must provide a complete design of the intended shroud or cover. Care must be taken not to modify or damage the structure during the use of the shroud. If damage should occur, the CONTRACTOR is held responsible for all repairs.

Attachment: Holly Hill LS_13 Rehabilitation_Bid Set Specifications_04.30.19 (2019-R-38 : Lift Station #13 Rehabilitation)

D. At completion of the work, remove all paint where spilled, splashed, splattered, sprayed, or smeared on all surfaces, including glass, light fixtures, hardware, equipment, painted, and unpainted surfaces.

E. After completion of all painting, the CONTRACTOR shall remove from job site all painting equipment, surplus materials, and debris resulting from this work.

F. The CONTRACTOR is responsible for the removal and proper disposal of all hazardous materials from the jobsite in accordance with Local, State, and Federal requirements as outlined by the Environmental Protection Agency.

G. A notarized statement shall be presented to the ENGINEER that all hazardous materials have been disposed of properly including but not limited to: Name of disposal company, disposal site, listing of hazardous materials, weights of all materials, cost per pound and EPA registration number.

PART 13 – TOUCH-UP MATERIALS

A. The CONTRACTOR shall provide at the end of the project at least one (1) gallon of each generic topcoat in each color as specified by the ENGINEER for future touch-up. Two (2) gallons may be required for two (2) component materials.

PART 14 – ON-SITE INSPECTION

A. During the course of this project the ENGINEER will reserve the option of incorporating the services of a qualified inspection service. The inspection service will be responsible for assuring the proper execution of this specification by the successful CONTRACTOR.

Attachment: Holly Hill LS_13 Rehabilitation_Bid Set Specifications_04.30.19 (2019-R-38 : Lift Station #13 Rehabilitation)

PART 15 – COATING SYSTEM SCHEDULE

15.1 STEEL – STRUCTURAL, TANKS, PIPES, AND EQUIPMENT

A. EXTERIOR EXPOSURE (NON-IMMERSION)

A.1 System No. 73-1 Epoxy/High Build Urethane

Surface Preparation: SSPC-SP6 Commercial Blast Cleaning

		DFT (Mils)
1st Coat:	66-1255 Epoxoline Primer	3.0 – 4.0
2nd Coat:	66-Color Hi-Build Epoxoline	2.0 – 3.0
3rd Coat:	73-Endura-Shield	2.0 – 3.0
	Total	7.0 – 10.0
	Minimum	**8.0 Mils**

NOTE: This system is highly resistant to abrasion, wet conditions, corrosive fumes, and chemical contact. Provides two to three (2-3) times the color and gloss retention of conventional paints. Second coat to be same color or close to finish color. Specify Series 1074 Endura-Shield for a gloss finish. Specify Series 161 in lieu of the 66 for faster recoats or lower temperature curing.

A.2 System No. 73-2 High Build Urethane For Marginally Cleaned Surfaces or Topcoating Existing Systems.

Surface Preparation: SSPC-SP6 Commercial Blast Cleaning or SSPC-SP3 Power Tool Cleaning Feather all edges.

		DFT (Mils)
Shop Coat:	Manufacturer Standard Primer (or existing coating)	1.5 – 2.0
Tie Coat:	135 Chembuild	3.0 – 5.0
Topccoat:	73-Color Endura-Shield	2.0 – 3.0
	Total	6.5 – 10.0
	Minimum	**7.5 Mils**

NOTE: This system can be used over factory finish paint or over non-sandblasted steel and offer the high performance of a urethane coating. Specify Series 1074 Endura-Shield for gloss finish. A test patch is always recommended to insure proper application.

Attachment: Holly Hill LS_13 Rehabilitation_Bid Set Specifications_04.30.19 (2019-R-38 : Lift Station #13 Rehabilitation)

A.3 System No. 82-1 Silicone Alkyd Enamel – Gloss

Surface Preparation: SSPC-SP6 Commercial Blast Cleaning

		DFT (Mils)
1st Coat:	37H-77 Chem-Prime H.S.	2.0 – 3.5
2nd Coat:	23-Color Enduratone	1.5 – 2.5
3rd Coat:	82-Color Silicone Alkyd Enamel	1.0 – 2.5
	Total	4.5 – 8.5
	Minimum	**5.5 Mils**

A.4 System 90-97 Zinc/Epoxy/Urethane

Surface Preparation: SSPC-SP6 Commercial Blast Cleaning

		DFT (Mils)
Primer:	90-97 Tneme-Zinc	2.5 – 3.5
2nd Coat:	66-Color Hi-Build Epoxoline	2.0 – 3.0
3rd Coat:	73 Endura-Shield III	2.0 – 3.0
	Total	6.5 – 9.5
	Minimum	**8.0 Mils**

NOTE: This system offers the added corrosion protection of a zinc rich primer. Series 90-97 Tneme-Zinc is an organic zinc-rich primer that can be used for field touch up of a zinc primer or for touch up of galvanized surfaces that are damaged. You can substitute Series 91-H_2O Hydrozinc for the 90-97. You can substitute Series 1074 for the Series 73 if a gloss finish is desired.

A.5 System No. 30-1 DTM Acrylic Overcoat System

Surface Preparation: Pressure Clean @ 3500 PSI
Spot SP2, SP3, SP6, or SP7
Feather all edges.

		DFT (Mils)
Spot Primer:	135 Chembuild	2.0 – 4.0
2nd Coat:	30 Spra-Saf EN	2.0 – 4.0
3rd Coat:	30 Spra-Saf EN	2.0 – 4.0
	Total	4.0 – 8.0
	Total	**6.0 – 12.0 (Spots)**

Attachment: Holly Hill LS_13 Rehabilitation_Bid Set Specifications_04.30.19 (2019-R-38 : Lift Station #13 Rehabilitation)

NOTE: This is an excellent coating system to overcoat existing unknown coating systems with limited surface preparation, using a non-stressful coating with excellent color and gloss retention. This coating should be spray applied and has excellent dry fall properties. The brush and roller version of Series 30 with a SG finish is the Series 29 Tufcryl. A test patch is always recommended to assure proper adhesion.

B. INTERIOR EXPOSURE (NON-IMMERSION)

B.1 System No. N69-1 High Solids Epoxy

Surface Preparation: SSPC-SP6 Commercial Blast Cleaning

		DFT (Mils)
1st Coat:	N69-Color Hi-Build Epoxoline II	5.0 – 7.0
2nd Coat:	N69-Color Hi-Build Epoxoline II	5.0 – 7.0
	Total	10.0 – 14.0
	Minimum	**12.0 Mils**

NOTE: This coating will provide maximum protection. It offers chemical and corrosion resistance for long-term protection against salt spray, moisture, corrosive fumes, and chemical attack. Series N69 is a polyamidoamine cured epoxy. Primer coat must be touched-up before 2nd coat is applied.

B.2 System No. 66-2 Polyamide Epoxy

Surface Preparation: SSPC-SP6 Commercial Blast Cleaning

		DFT (Mils)
1st Coat:	66-Color Hi-Build Epoxoline	3.0 – 5.0
2nd Coat:	66-Color Hi-Build Epoxoline	4.0 – 6.0
	Total	7.0 – 11.0
	Minimum	**9.0 Mils**

NOTE: This system will provide chemical and corrosion resistance against abrasion, moisture, corrosion fumes, chemical contact, and immersion in non-potable water. Primer coat must be touched-up before 2nd coat is applied. Substitute Series 161 for low temperature cure or quick recoats.

Attachment: Holly Hill LS_13 Rehabilitation_Bid Set Specifications_04.30.19 (2019-R-38 : Lift Station #13 Rehabilitation)

B.3 System No. 66-6 High Build Epoxy (Over OEM Finishes)

Surface Preparation: Spot SSPC-SP6 Commercial Blast Cleaning or SSPC-SP11 Power Tool Cleaning To Bare Metal

		DFT (Mils)
1st Coat:	Manufacturer's Standard (or existing coating)	1.0 – 2.0
2nd Coat:	135 Chembuild	3.0 – 5.0
3rd Coat:	66-Color Hi-Build Epoxoline	3.0 – 5.0
	Total	7.0 – 12.0
	Minimum	**8.0 Mils**

NOTE: This system is to be used over standard manufacturer's primer to offer a high performance epoxy finish. Excellent for areas of rust not able to be completely cleaned.

B.4 System No. 23-1 Alkyd Enamel – Semi-Gloss

Surface Preparation: SSPC-SP6 Commercial Blast Cleaning

		DFT (Mils)
1st Coat:	37H-77 Chem-Prime H.S.	2.0 – 3.5
2nd Coat:	23-Color Enduratone	1.5 – 2.5
3rd Coat:	23-Color Enduratone	1.5 – 2.5
	Total	5.0 – 8.5
	Minimum	**6.0 Mils**

Attachment: Holly Hill LS_13 Rehabilitation_Bid Set Specifications_04.30.19 (2019-R-38 : Lift Station #13 Rehabilitation)

C. IMMERSION

C.1 System No. N69-2 High Solids High Build Epoxy (Non-Potable Water)

Surface Preparation: SSPC-SP10 Near White Blast Cleaning

		DFT (Mils)
Stripe Coat:	N69-Color Hi-Build Epoxoline II (by brush and roller to all weld seams and plate edges)	3.0 – 5.0
2nd Coat:	N69-Color Hi-Build Epoxoline II	5.0 – 7.0
3rd Coat:	N69-Color Hi-Build Epoxoline II	5.0 – 7.0
	Total	10.0 – 14.0 (excluding stripe coat)
	Minimum	**12.0 Mils**

NOTE: This system provides maximum protection in immersion service. Scarify the surface before topcoating if the Series N69 has been exterior-exposed for 60 days or longer. If primer coat is damaged, it must be touched-up before 2nd coat is applied.

C.2 System No. 66-2 High Build Epoxy (Non-Potable Water)

Surface Preparation: SSPC-SP10 Near White Blast Cleaning

		DFT (Mils)
Stripe Coat:	66-Color to all weld seams and plate edges	2.0 – 4.0
1st Coat:	66-Color Hi-Build Epoxoline	3.0 – 5.0
2nd Coat:	66-Color Hi-Build Epoxoline	3.0 – 5.0
3rd Coat:	66-Color Hi-Build Epoxoline	3.0 – 5.0
	Total	9.0 – 15.0 (excluding stripe coat)
	Minimum	**11.0 Mils**

NOTE: This system will provide chemical and corrosion resistance for protection against abrasion, moisture, corrosive fumes, chemical contact, and immersion. Primer coat must be touched-up before 2nd coat is applied. Scarify the surface before topcoating if the Series 66 has been exterior-exposed for 60 days or longer. Substitute Series 161 for low temperature cure or quick recoats.

Attachment: Holly Hill LS_13 Rehabilitation_Bid Set Specifications_04.30.19 (2019-R-38 : Lift Station #13 Rehabilitation)

C.3 System No. 20-1 Epoxy-Polyamide (Potable Water)

Surface Preparation: SSPC-SP10 Near White Blast Cleaning

		DFT (Mils)
Stripe Coat:	20-1255 Pota-Pox (Beige) to all weld seams and plate edges	2.0 – 4.0
1st Coat:	20-15BL Pota-Pox (Tank White)	3.0 – 5.0
2nd Coat:	20-15BL Pota-Pox (Beige)	4.0 – 6.0
3rd Coat:	20-15BL Pota-Pox (Tank White)	4.0 – 6.0
	Total	11.0 – 17.0 (excluding stripe coat)
	Minimum	**12.0 Mils**
Caulk:	Seal all open roof seams with a flexible NSF Certified caulking such as Sika Flex 1A	

NOTE: This system meets American Water Works Association AWWA D 102 Inside Paint System Number 1. Series 20 meets the new requirements of approval for potable water use as established by the National Sanitation Foundation Standard 61. Substitute Series FC20 for low temperature cure or quick recoats.

C.4 System No. N140 High Solids Epoxy (Potable Water)

Surface Preparation: SSPC-SP10 Near White Blast Cleaning

		DFT (Mils)
Stripe Coat:	N140-15BL Pota-Pox Plus (by brush and roller to all weld seams and plate edges)	3.0 – 5.0
1st Coat:	N140-1255BL Pota-Pox Plus (Beige)	6.0 – 8.0
2nd Coat:	N140-15BL Pota-Pox Plus (Tank White)	6.0 – 8.0
	Total	12.0 – 16.0 (excluding stripe coat)
	Minimum	**14.0 Mils**

Attachment: Holly Hill LS_13 Rehabilitation_Bid Set Specifications_04.30.19 (2019-R-38 : Lift Station #13 Rehabilitation)

NOTE: Series N140 meets the new requirements of approval for potable water use as established by the National Sanitation Foundation Standard 61.

C.5 System No. 46-30 Coal Tar-Epoxy (Non-Potable Water)

Surface Preparation: SSPC-SP10 Near White Blast Cleaning*

		DFT (Mils)
One Coat:	46H-413 Hi-Build Tneme-Tar	16.0 – 20.0

NOTE: May be applied in a two-coat application. Review critical recoat time if utilized.

*SSPC-SP6 Commercial Blast Cleaning may be used for non-immersion service.

C.6 System No. 91-H_2O Zinc/Epoxy (Potable Water)

Surface Preparation: SSPC-SP10 Near White Metal Blast

		DFT (Mils)
Stripe Coat:	91-H_2O Hydrozinc 2000 (by brush and roller to all weld seams and plate edges)	2.5 – 3.5
1st Coat:	91-H_2O Hydrozinc 2000	2.5 – 3.5
2nd Coat:	20-1255 Pota-Pox (Beige)	4.0 – 6.0
3rd Coat:	20-15BL Pota-Pox (Tank White)	4.0 – 6.0
	Total	10.5 – 15.5 (excluding stripe coat)
	Minimum	**12.0 Mils**
Caulk:	Seal all open roof seems with a flexible NSF Certified caulking such as Sika-Flex 1A.	

NOTE: Can substitute Series N140, or FC20 for Series 20 if preferred. Meets AWWA D102-97 Inside Coating System No. 3.

Attachment: Holly Hill LS_13 Rehabilitation_Bid Set Specifications_04.30.19 (2019-R-38 : Lift Station #13 Rehabilitation)

15.2 OVERHEAD METAL DECKING, JOIST

D. INTERIOR EXPOSURE

D.1 System No. 115-1 Uni-Bond DF

Surface Preparation: Surfaces must be dry, clean, and free of oil, grease, and other contaminants. Allow concrete to cure 28 days. Galvanized metal decking must be scarified.

		DFT (Mils)
Coating:	115-Color Uni-Bond DF	2.0 – 4.0

NOTE: This system should be used on ceiling areas where a one-coat system is desired. Can be applied over steel, galvanized, and aluminum decking, joist, beams, conduits, and concrete.

E. EXTERIOR EXPOSURE

E.1 System No. 135-5 Epoxy/DTM Acrylic

Surface Preparation: Pressure clean to remove all dirt, oil, grease, chemicals, and foreign contaminants. Remove loose paint and all rust by hand and power tool cleaning (SSPC-SP 2 & 3). Feather all edges.

		DFT (Mils)
Spot Primer:	135 Chembuild	3.0 – 5.0
1st Coat:	30 Spra-Saf EN	2.0 – 4.0
2nd Coat:	30 Spra-Saf EN	2.0 – 4.0
	Total	4.0 – 8.0 [for two (2) coats]

NOTE: This system can be applied over a wide variety of coatings and factory finishes. It can also be applied direct to galvanized aluminum decking, joists, conduits, and tight rust.

Attachment: Holly Hill LS_13 Rehabilitation_Bid Set Specifications_04.30.19 (2019-R-38 : Lift Station #13 Rehabilitation)

15.3 MILL COATED STEEL PIPE

F. EXTERIOR/INTERIOR EXPOSURE (NON-IMMERSION)

F.1 System No. 66-3 Epoxy-Polyamide

Surface Preparation: Surface shall be clean and dry. Scarify by Brush Blasting if surface is hard and glossy.

		DFT (Mils)
1st Coat:	66-Color Hi-Build Epoxoline	3.0 – 4.0
2nd Coat:	66-Color Hi-Build Epoxoline	4.0 – 6.0
*3rd Coat:	73 Endura-Shield	(2.0 – 3.0)
	Total	9.0 – 13.0
	Minimum	**11.0 Mils for 3 coats** **9.0 Mils for 2 coats**

*Optional topcoat for exterior exposure

NOTE: This system can be applied directly to mill coated steel pipe without sandblasting for use in non-immersion. There may be some bleed through with the 1st coat. Do not apply over glossy varnish type mill coatings without thorough scarification.

15.4 GALVANIZED STEEL – PIPE AND MISCELLANEOUS FABRICATIONS

G. EXTERIOR (NON-IMMERSION)

G.1 System No. 73-2 Epoxy/High Build Urethane

Surface Preparation: SSPC-SP1 Solvent Cleaning and Scarify by Brush Off Blasting, Hand Sanding, or Chemical Treatment

		DFT (Mils)
1st Coat:	66-Color Hi-Build Epoxoline	2.0 – 4.0
2nd Coat:	73-Color Endura-Shield	2.0 – 4.0
	Total	4.0 – 8.0
	Minimum	**5.0 Mils**

NOTE: Series 66 has excellent adhesion to galvanized steel. This system is highly resistant to abrasion, wet conditions, corrosive fumes, and chemical contact. Provides two to three (2-3) times the color and gloss retention of conventional paints. First coat to be same color as or close to the finish color. Specify Series 1074 Endura-Shield for gloss finish.

Attachment: Holly Hill LS_13 Rehabilitation_Bid Set Specifications_04.30.19 (2019-R-38 : Lift Station #13 Rehabilitation)

H. INTERIOR EXPOSURE (NON-IMMERSION)

H.1 System No. 66-6 Polyamide Epoxy

Surface Preparation: SSPC-SP1 Solvent Cleaning and Scarify by Brush Off Blasting, Hand Sanding, or Chemical Treatment

		DFT (Mils)
1st Coat:	66-Color Hi-Build Epoxoline	2.0 – 4.0
2nd Coat:	66-Color Hi-Build Epoxoline	2.0 – 4.0
	Total	4.0 – 8.0
	Minimum	**5.0 Mils**

I. IMMERSION (POTABLE WATER)

I.1 System No. 20-1 Epoxy-Polyamide (Potable Water)

Surface Preparation: Solvent Clean Per SSPC-SP1 & Abrasive Blast per SSPC-SP7

		DFT (Mils)
1st Coat:	20-1255 Pota-Pox Primer	4.0 – 6.0
2nd Coat:	20-15BL Pota-Pox Finish	4.0 – 6.0
	Total	8.0 – 12.0
	Minimum	**10.0 Mils**

NOTE: Series 20 meets the new requirements of approval for potable water use as established by the National Sanitation Foundation Standard 61. Substitute Series FC20 for low temperature cure or quick recoat.

15.5 CHAIN-LINK FENCES

J. GALVANIZED STEEL & NON-FERROUS METAL

J.1 System No. 6-2 Oil Based Enamel

Surface Preparation: Surface shall be clean and dry

		DFT (Mils)
1st Coat:	80 Galv-Gard	2.5 – 4.0
2nd Coat:	80 Galv-Gard	2.5 – 4.0
	Total	5.0 – 8.0
	Minimum	**5.0 Mils**

Attachment: Holly Hill LS_13 Rehabilitation_Bid Set Specifications_04.30.19 (2019-R-38 : Lift Station #13 Rehabilitation)

15.6 CONCRETE

K. EXTERIOR – ABOVE GRADE

K.1 System No. 180-1 High Build Acrylic Emulsion – Smooth

Surface Preparation: Surface shall be clean and dry.

		DFT (Mils)
1st Coat:	180-Color W.B. Tneme-Crete	4.0 – 6.0*
2nd Coat:	180-Color W.B. Tneme-Crete	4.0 – 6.0*
	Total	8.0 – 12.0
	Minimum	**10.0 Mils**

*This coating should be spray applied to achieve the recommended DFT. Application by roller would possibly require additional coats to achieve the recommended DFT for the system.
NOTE: Series 180 is a high build decorative acrylic coating in a smooth finish. Substitute Series 181 if a sand texture finish if desired.

K.2 System No. 6-1 Acrylic Emulsion

Surface Preparation: Surface must be clean and dry.

		DFT (Mils)
1st Coat:	6-Color Tneme-Cryl	2.0 – 3.0
2nd Coat:	6-Color Tneme-Cryl	2.0 – 3.0
	Total	4.0 – 6.0
	Minimum	**5.0 Mils**

NOTE: If semi-gloss finish is desired, use Series 29 Tuf-Cryl as the 2nd coat at 1.5 – 2.0 mils DFT.

K.3 System No. 156-1 Modified Acrylic Elastomer

Surface Preparation: Surface must be clean and dry.

		DFT (Mils)
1st Coat:	156-Color Enviro-Cret	4.0 – 8.0
2nd Coat:	156-Color Enviro-Cret	4.0 – 8.0
	Total	8.0 – 16.0
	Minimum	**10.0 Mils**

Attachment: Holly Hill LS_13 Rehabilitation_Bid Set Specifications_04.30.19 (2019-R-38 : Lift Station #13 Rehabilitation)

NOTE: If texture is needed, use 157 Enviro-Crete TX (medium texture). For application over previously applied coatings, use TNEMEC Series 151 Elasto-Grip at 1.0 – 2.5 mils DFT prior to the application of Series 156 Enviro-Crete.

K.4 System No. 100 Concrete Stain

Surface Preparation: The surface must be clean, dry, sound, and free of cracks, and paint.

		SF/Gal/Ct
Sealer:	Chemprobe Prime A Pell H_2O	65 – 200
Concrete Stain:	Two (2) coats of Chemprobe Conformal Stain	75 – 200

L. EXTERIOR – BELOW GRADE

L.1 System No. 46-61 Coal Tar Pitch Solution

Surface Preparation: Surface must be clean and dry. Allow new concrete to cure at least 28 days.

		DFT (Mils)
1st Coat:	46-465 H.B. Tnemecol	8.0 – 12.0
2nd Coat:	46-465 H.B. Tnemecol	8.0 – 12.0
	Total	16.0 – 24.0
	Minimum	**16.0 Mils**

L.2 System No. 46-31 Coal Tar Epoxy

Surface Preparation: Surface shall be clean and dry. Allow New concrete to cure at least 28 days.

		DFT (Mils)
Coating:	46H-413 Hi-Build Tneme-Tar	14.0 – 20.0

L.3 System No. 100-1 Crystalline Waterproofing

Surface Preparation: Surface to be clean and opened up by Brush Blasting, Acid Etching, or Water Blasting w/Turbo Tips. Surface must be pre-wetted prior to application.

1st Coat:	XYPEX Concentrate @ (1.5 #/SY)
2nd Coat:	XYPEX Modified @ (1.5 #/SY)

Attachment: Holly Hill LS_13 Rehabilitation_Bid Set Specifications_04.30.19 (2019-R-38 : Lift Station #13 Rehabilitation)

NOTE: This system can be applied to concrete that is still wet or hasn't developed final cure. It can be used where wet surface conditions exist or where there is the potential for water intrusion due to hydrostatic pressure. Application shall be per XYPEX specification manual.

M. INTERIOR EXPOSURE (NON-IMMERSION)

M.1 System No. 6-1 Acrylic Emulsion (Interior/Exterior)

Surface Preparation: Surface shall be clean and dry. Allow concrete to cure for 28 days.

		DFT (Mils)
1st Coat:	6-Color Tneme-Cryl	2.0 – 3.0
2nd Coat:	6-Color Tneme-Cryl	2.0 – 3.0
	Total	4.0 – 6.0
	Minimum	**5.0 Mils**

NOTE: This system will provide a decorative coating with good exterior durability, color retention, and a high vapor transmission rate. For Semi-Gloss finish, substitute Series 29 Tuf-Cryl for the 2nd coat at 1.5 – 2.0 mils DFT. Apply both the Series 6 & 29 in the same color.

M.2 System No. 66-4 Epoxy-Polyamide (Interior)

Surface Preparation: Surfaces shall be clean and dry. Allow concrete to cure for 28 days.

		DFT (Mils)
1st Coat:	66-Color Hi-Build Epoxoline	3.0 – 5.0
2nd Coat:	66-Color Hi-Build Epoxoline	4.0 – 6.0
	Total	7.0 – 11.0
	Minimum	**9.0 Mils**

Attachment: Holly Hill LS_13 Rehabilitation_Bid Set Specifications_04.30.19 (2019-R-38 : Lift Station #13 Rehabilitation)

M.3 System No. 84-1 High Solids Glazed Epoxy (Interior)

Surface Preparation: Surfaces shall be clean and dry. Allow concrete to cure for 28 days.

		DFT (Mils)
1st Coat:	84-Color Ceramlon II	6.0 – 10.0
2nd Coat:	84-Color Ceramlon II	6.0 – 10.0
	Total	12.0 – 20.0
	Minimum	**14.0 Mils**

M.4 System No. 113-2 Acrylic Epoxy Semi-Gloss

Surface Preparation: Surface must be clean and dry.

		DFT (Mils)
1st Coat:	113-Color Tneme-Tufcoat	4.0 – 6.0
2nd Coat:	113-Color Tneme-Tufcoat	4.0 – 6.0
	Total	8.0 – 12.0
	Minimum	**8.0 Mils**

NOTE: Substitute Series 114 Tneme-Tufcoat for gloss finish. Multiple coats may be required if application is by roller.

N. IMMERSION – POTABLE & NON-POTABLE WATER

N.1 System No. 66-4 Epoxy-Polyamide (Non-Potable Water)

Surface Preparation: Allow concrete to cure for 28 days. Abrasive blast clean per SSPC-SP13.

		DFT (Mils)
1st Coat:	66-Color Hi-Build Epoxoline	4.0 – 6.0
2nd Coat:	66-Color Hi-Build Epoxoline	4.0 – 6.0
	Total	8.0 – 12.0
	Minimum	**10.0 Mils**

NOTE: Surface irregularities and bug holes should be filled to a smooth uniform appearance as required with TNEMEC Series 63-1500 Filler & Surfacer. First coat should be spray applied and backrolled.

Attachment: Holly Hill LS_13 Rehabilitation_Bid Set Specifications_04.30.19 (2019-R-38 : Lift Station #13 Rehabilitation)

N.2 System No. 104-5 High Solids Epoxy (Non-Potable Water)

Surface Preparation: Allow concrete to cure for 28 days. Abrasive blast clean per SSPC-SP13.

		DFT (Mils)
1st Coat:	104-1255 H.S. Epoxy Primer	6.0 – 10.0
2nd Coat:	104-Color H.S. Epoxy	6.0 – 10.0
	Total	12.0 – 20.0
	Minimum	**14.0 Mils**

NOTE: Surface irregularities and bug holes should be filled to a smooth uniform appearance as required with TNEMEC Series 63-1500 Filler & Surfacer. First coat should be spray applied and backrolled.

N.3 System No. 46-31 Coal Tar-Epoxy (Non-Potable Water)

Surface Preparation: Allow concrete to cure for 28 days. Abrasive blast clean per SSPC-SP13.

		DFT (Mils)
One Coat:	46H-413 Hi-Build Tneme-Tar	14.0 – 20.0

NOTE: May be applied in a two-coat application. Review critical recoat time if utilized. Surface irregularities and bug holes should be filled to a smooth uniform appearance as required with TNEMEC Series 63-1500 Filler & Surfacer.

N.4 System No. 20-2 Epoxy-Polyamide (Potable Water)

Surface Preparation: Allow concrete to cure for 28 days. Abrasive blast clean per SSPC-SP13.

		DFT (Mils)
1st Coat:	20-1255 Pota-Pox	4.0 – 6.0
2nd Coat:	20-15BL Pota-Pox Finish	4.0 – 6.0
	Total	8.0 – 12.0
	Minimum	**10.0 Mils**

NOTE: This system meets American Water Works Association AWWA D 102Inside System No. 1. Series 20 meets the new requirements of approval for potable water use as established by the National Sanitation Foundation Standard Surface irregularities and bug holes should be filled to a smooth uniform appearance as required with TNEMEC Series 63-1500 Filler & Surfacer. (NSF Standard 61 approved). Substitute Series FC20 for low temperature cure or quick recoats.

Attachment: Holly Hill LS_13 Rehabilitation_Bid Set Specifications_04.30.19 (2019-R-38 : Lift Station #13 Rehabilitation)

N.5 System No. N140-2 Epoxy-Polyamidoamine (Potable Water)

Surface Preparation: Allow concrete to cure for 28 days. Abrasive blast clean per SSPC-SP13.

		DFT (Mils)
1st Coat:	N140-1255 Pota-Pox Plus	6.0 – 8.0
2nd Coat:	N140-15BL Pota-Pox Plus	6.0 – 8.0
	Total	12.0 – 16.0
	Minimum	**14.0 Mils**

NOTE: Series N140 meets the new requirements of approval for potable water use as established by the National Sanitation Foundation Standard 61. Surface irregularities and bug holes should be filled to a smooth uniform appearance as required with TNEMEC Series 63-1500 Filler & Surfacer. (NSF Standard 61 approved). First coat should be sprayed and backrolled.

N.6 System No. 264-1 Elastomeric Polyurethane

Surface Preparation: Surfaces shall be clean and dry. Allow new concrete to cure for 28 days. Abrasive blast clean per SSPC-SP13 (Surface Preparation of Concrete)

		DFT (Mils)
Primer:	20-15BL (Tank White)	6.0
Coating:	264 Elasto-Shield (Black)	60.0 ±
	Total	65.0

NOTE: This system is NSF Certified for Potable Water. This flexible liner can be used to rehab tanks with leaks. Multiple passes may be required to achieve the desired thickness that can range from 50-100 mils. See Elasto-Shield Application Guide for detailed instructions.

Attachment: Holly Hill LS_13 Rehabilitation_Bid Set Specifications_04.30.19 (2019-R-38 : Lift Station #13 Rehabilitation)

O. INTERIOR EXPOSURE (NON-IMMERSION) OVER EXISTING COATINGS

O.1 System No. 6-1 Acrylic Emulsion

Surface Preparation: Surface must be clean and dry.

		DFT (Mils)
1st Coat:	6-Color Tneme-Cryl	2.0 – 3.0
2nd Coat:	6-Color Tneme-Cryl	2.0 – 3.0
	Total	4.0 – 6.0
	Minimum	**5.0 Mils**

NOTE: If semi-gloss finish is desired, use Series 29 Tuf-Cryl as the 2nd Coat at 1.5 – 2.0 mils DFT.

O.2 System No. 113-1 Acrylic-Epoxy Semi-Gloss

Surface Preparation: Surface must be clean and dry.

		DFT (Mils)
1st Coat:	113-Color Tneme-Tufcoat	2.0 – 3.0
2nd Coat:	113-Color Tneme-Tufcoat	2.0 – 3.0
	Total	4.0 – 6.0
	Minimum	**5.0 Mils**

NOTE: This system will provide high performance and can be applied directly over existing coatings without lifting. Can be used when low odor is required during application. Specify Series 114 Tneme-Tufcoat for Gloss Finish. This coating can be spray applied in a single coat at 4.0 – 6.0 mils DFT.

Attachment: Holly Hill LS_13 Rehabilitation_Bid Set Specifications_04.30.19 (2019-R-38 : Lift Station #13 Rehabilitation)

15.7 CONCRETE FLOORS

P. EPOXY FLOOR COATING

P.1 System No. 205-1 Epoxy-Polyamide

Surface Preparation: Allow concrete to cure 28 days. Acid Etch or Brush Off Blast Cleaning per SSPC-SP13.

		DFT (Mils)
1st Coat:	205 Terra-Tread FC	3.0 – 5.0
2nd Coat:	205 Terra-Tread FC	3.0 – 5.0
	Total	6.0 – 10.0
	Minimum	**6.0 Mils**

NOTE: This system will provide a durable, longwearing coating that bonds tightly to concrete and stands up under heavy foot traffic, frequent cleaning, and spillage of water, oil, grease, or chemical. For floors exposed to the sun, add a 3rd coat of Tnemec Series 291 CRU at 2.0 – 3.0 mils DFT.

NOTE: For a skid resistant finish broadcast 50 mesh dry washed silica sand into the 1st coat.

P.2 System No. 287-1 Waterborne Epoxy-Amine

Surface Preparation: Allow concrete to cure 28 days. Acid Etch or Brush Off Blast Cleaning per SSPC-SP13.

		DFT (Mils)
1st Coat:	287-Color Enviro-Tread	2.0 – 4.0
2nd Coat:	287-Color Enviro-Tread	2.0 – 4.0
	Total	4.0 – 8.0
	Minimum	**5.0 Mils**

NOTE: For a non-skid finish, add 287-300C skid resistance sand into the first coat. For floors exposed to the sun add a 3rd coat of Tnemec Series 291-CRU at 2.0 – 3.0 mils DFT.

Attachment: Holly Hill LS_13 Rehabilitation_Bid Set Specifications_04.30.19 (2019-R-38 : Lift Station #13 Rehabilitation)

P.3 System No. 291-12 Epoxy/Urethane

Surface Preparation: Allow concrete to cure 28 days. Acid Etch or Brush Off Blast Cleaning per SSPC-SP13.

		DFT (Mils)
1st Coat:	66-Color Hi-Build Epoxoline	2.0 – 3.0
2nd Coat:	66-Color Hi-Build Epoxoline	2.0 – 3.0
3rd Coat:	291-Color CRU	2.0 – 3.0
	Total	6.0 – 9.0
	Minimum	**7.0 Mils**

NOTE: This system offers a hard, chemically resistant floor coating with excellent flow properties and color and gloss retention.

P.4 System No. 280-1 High Build Polyamine-Epoxy Glaze Floor

Surface Preparation: Allow concrete to cure 28 days. Abrasive Blast Cleaning (Refer to Installation Guide of manufacturer.)

		DFT (Mils)
1st Coat:	201 Epoxoprime	6.0 – 8.0
2nd Coat:	280 Tneme-Glaze	6.0 – 8.0
3rd Coat:	280 Tneme-Glaze	6.0 – 8.0
	Total	18.0 – 24.0
	Minimum	**18.0 Mils**

Please refer to manufacturer's Installation Guide and Technical Data for proper installation.

P.5 System No. 237/281 Double Broadcast Flooring (Non-Slip)

Surface Preparation: Abrasive Blast Cleaning (Refer to Installation Guide of manufacturer.)

		DFT (Mils)
1st Coat:	201 Epoxoprime	6.0 – 8.0
2nd Coat:	237 Power-Tread	1/8" (2 coats at 1/16" each)
3rd Coat:	280 Tneme-Glaze	8.0 – 12.0
	Minimum	**1/4" +**

Please refer to manufacturer's Installation Guide and Technical Data for proper installation.

Attachment: Holly Hill LS_13 Rehabilitation_Bid Set Specifications_04.30.19 (2019-R-38 : Lift Station #13 Rehabilitation)

P.6 System No. 222/284 Multi-Color Quartz Broadcast Floor and Cove Base

Surface Preparation: Abrasive blast cleaning (Refer to Tnemec Surface Preparation and Installation Guide).

		DFT (Mils)
1st Coat:	222 Deco-Tread	1/8" (2 coats at 1/16" each)
2nd Coat:	284 Deco-Clear	8.0 – 10.0
	Minimum	**1/8" +**

15.8 POROUS MASONRY

Q. EXTERIOR/INTERIOR EXPOSURE

Q.1 System No. 180-2 Acrylic Emulsion – Smooth

Surface Preparation: Surface shall be clean and dry.

		DFT (Mils)
Block Filler:	54-562 Modified Epoxy Masonry Filler	80 SF/Gal
1st Coat:	180-Color W.B. Tneme-Crete	4.0 – 8.0
2nd Coat:	180-Color W.B. Tneme-Crete	4.0 – 8.0
	Total	8.0 – 16.0*

*Total DFT of topcoats only

NOTE: Also available in Series 181 in a sand finish. The Series 180 has to be spray applied to achieve recommended dry film thickness application; by roller would require additional coats.

Q.2 System No. 6-2 Acrylic Emulsion, Low Sheen

Surface Preparation: Surface shall be clean and dry.

		DFT (Mils)
Block Filler:	54-562 Modified Epoxy Masonry Filler	80 SF/Gal
1st Coat:	6-Color Tneme-Cryl	2.0 – 3.0
2nd Coat:	6-Color Tneme-Cryl	2.0 – 3.0
	Total	4.0 – 6.0*

*Total dry film thickness of topcoats only.

Attachment: Holly Hill LS_13 Rehabilitation_Bid Set Specifications_04.30.19 (2019-R-38 : Lift Station #13 Rehabilitation)

NOTE: This system will fill the block and provide a sealed surface. For semi-gloss finish, use Series 29 Tufcryl (SG) for the 2nd coat at 1.5 – 2.0 mils DFT.

Q.3 System No. 66-15 Epoxy-Polyamide (Interior)

Surface Preparation: Surface shall be clean and dry.

		DFT (Mils)
Block Filler:	54-660 Epoxy Masonry Filler	100 SF/Gal
1st Coat:	66-Color Hi-Build Epoxoline	4.0 – 6.0
2nd Coat:	66-Color Hi-Build Epoxoline	4.0 – 6.0
	Total	8.0 – 12.0*

*Total dry film thickness of topcoats only.

NOTE: Block filler is a polyamide epoxy designed for high moisture.

Q.4 System No. 104-6 High Solids Epoxy (Interior Only)

Surface Preparation: Surface to be clean and dry.

		DFT (Mils)
1st Coat:	104-Color H.S. Epoxy	6.0 – 10.0
2nd Coat:	104-Color H.S. Epoxy	6.0 – 10.0
	Total	12.0 – 20.0
	Minimum	**14.0 Mils**

NOTE: The surface will be tile-like for easy cleaning and will provide protection against chemical attack, corrosive fumes, and high humidity and wash down. Spray and backroll first coat to fill porosity.

Q.5 System No. 113-1 Acrylic-Epoxy Semi-Gloss (Interior Only)

Surface Preparation: Surface must be clean and dry.

		DFT (Mils)
Block Filler:	54-562 Modified Epoxy Masonry Filler	80 SF/Gal
1st Coat:	113-Color Tneme-Tufcoat	4.0 – 6.0
2nd Coat:	113-Color Tneme-Tufcoat	4.0 – 6.0
	Total	8.0 – 12.0*

*Total dry film thickness of topcoats only.

Attachment: Holly Hill LS_13 Rehabilitation_Bid Set Specifications_04.30.19 (2019-R-38 : Lift Station #13 Rehabilitation)

NOTE: Series 113 can be spray applied at 4.0 – 6.0 mils DFT. Application by brush and roller will require additional coats.

NOTE: Series 113 Tneme-Tufcoat has very low odor and can be used when painting in occupied areas. Specify Series 114 Tneme-Tufcoat for a gloss finish.

Q.6 System No. 156-1 Modified Acrylic Elastomer (Exterior)

Surface Preparation: Surface must be clean and dry.

		DFT (Mils)
Block Filler:	54-562 Modified Epoxy Masonry Filler	80 SF/Gal
1st Coat:	156-Color Enviro-Crete	4.0 – 8.0
2nd Coat:	156-Color Enviro-Crete	4.0 – 8.0
	Total	8.0 – 16.0*
	Minimum	**10.0 Mils***

*Total dry film thickness of topcoats only.

NOTE: If texture is needed, use 157 Enviro-Crete TX (medium texture). For application over previously applied coatings, use TNEMEC 151 Elasto-Grip at 1.0 – 2.5 mils DFT in place of the 54-562 block filler.

15.9 GYPSUM WALLBOARD

R. INTERIOR EXPOSURE

R.1 System No. 113-5 Acrylic-Epoxy

Surface Preparation: Surface must be clean and dry.

		DFT (Mils)
1st Coat:	51-792 PVA Sealer	1.0 – 2.0
2nd Coat:	113 H.B. Tneme-Tufcoat	2.0 – 3.0
3rd Coat:	113 H.B. Tneme-Tufcoat	2.0 – 3.0
	Total	5.0 – 8.0
	Minimum	**6.0 Mils**

NOTE: Series 113 can be spray applied in a single coat at 4.0 – 6.0 mils DFT.
Substitute Series 114 if a gloss finish is desired.

Attachment: Holly Hill LS_13 Rehabilitation_Bid Set Specifications_04.30.19 (2019-R-38 : Lift Station #13 Rehabilitation)

R.2 System No. 66-22 Hi-Build Epoxoline

Surface Preparation: Surface must be clean and dry.

		DFT (Mils)
1st Coat:	51-792 PVA Sealer	1.0 – 2.0
2nd Coat:	66-Color Hi-Build Epoxoline	4.0 – 6.0*
	Total	5.0 – 8.0
	Minimum	**5.0 Mils +**

*Two coats may be required if applied by roller.

R.3 System No. 6-1 Acrylic Emulsion, Low Sheen (Interior / Exterior Exposure)

Surface Preparation: Surface must be clean and dry.

		DFT (Mils)
1st Coat:	6-Color Tneme-Cryl	2.0 – 3.0
2nd Coat:	6-Color Tneme-Cryl	2.0 – 3.0
	Total	4.0 – 6.0
	Minimum	**5.0 Mils**

NOTE: This system is designed for mild use areas like office walls, laboratory ceilings, stairwells, etc. For semi-gloss finish, use Series 29 Tufcryl at 1.5 – 2.0 mils DFT.

15.10 WOOD

S. EXTERIOR/INTERIOR EXPOSURE

S.1 System No. 23-4 Alkyd Semi-Gloss

Surface Preparation: Surface shall be clean and dry.

		DFT (Mils)
1st Coat:	36-603 Undercoater	2.5 – 3.5
2nd Coat:	23 Enduratone	1.5 – 3.5
3rd Coat:	23 Enduratone	1.5 – 3.5
	Total	5.5 – 10.5
	Minimum	**6.0 Mils**

NOTE: Specify Series 2H Hi-Build Tneme-Gloss for High Gloss finish.

Attachment: Holly Hill LS_13 Rehabilitation_Bid Set Specifications_04.30.19 (2019-R-38 : Lift Station #13 Rehabilitation)

S.2 System No. 6-5 Acrylic Latex

Surface Preparation: Surface shall be clean and dry.

		DFT (Mils)
1st Coat:	36 Undercoater	2.0 – 3.5
2nd Coat:	6-Color Tneme-Cryl	2.0 – 3.0
3rd Coat:	6-Color Tneme-Cryl	2.0 – 3.0
	Total	6.0 – 9.5
	Minimum	**7.5 Mils**

NOTE: Substitute Series 29 Tufcryl for the third coat at 1.5 – 2.0 mils DFT if semi-gloss finish is desired.

15.11 PVC PIPE

T. EXTERIOR OR INTERIOR

T.1 System No. 73-23 Epoxy-Polyamide

Surface Preparation: Solvent clean per SSPC-SP1 & Scarify by Brush Blast or Hand Sanding.

		DFT (Mils)
1st Coat:	66-Color Hi-Build Epoxoline	2.0 – 3.0
2nd Coat:	73 Endura-Shield	2.0 – 3.0
	Total	4.0 – 6.0
	Minimum	**5.0 Mils**

15.12 INSULATED PIPE

U. INTERIOR EXPOSURE

U.1 System No. 6-1 Acrylic Emulsion, Low Sheen

Surface Preparation: Surface shall be clean and dry.

		DFT (Mils)
1st Coat:	6-Color Tneme-Cryl	2.0 – 3.0
2nd Coat:	6-Color Tneme-Cryl	2.0 – 3.0
	Total	4.0 – 6.0
	Minimum	**5.0 Mils**

Attachment: Holly Hill LS_13 Rehabilitation_Bid Set Specifications_04.30.19 (2019-R-38 : Lift Station #13 Rehabilitation)

NOTE: For semi-gloss finish, use Series 29 Tufcryl for the 2nd coat.

15.13 HIGH HEAT COATING

V. EXTERIOR/INTERIOR EXPOSURE

V.1 System No. 39-2 Silicone Aluminum (1200°F Maximum)

Surface Preparation: SSPC-SP10 Near White Blast Cleaning – 1.0 Mil Surface Profile

		DFT (Mils)
1st Coat:	39-1261 Silicone Aluminum	1.0 – 1.5
2nd Coat:	39-1261 Silicone Aluminum	1.0 – 1.5
	Total	2.0 – 3.0
	Minimum	**2.0 Mils**

NOTE: Coating must be heat cured at 400°F for one (1) hour.

V.2 System No. 39-4 Silicone Aluminum (600°F Maximum)

Surface Preparation: SSPC-SP10 Near White Blast Cleaning – 1.0 Mil Surface Profile

		DFT (Mils)
1st Coat:	39-1261 Silicone Aluminum	1.0 – 1.5
2nd Coat:	39-1261 Silicone Aluminum	1.0 – 1.5
	Total	2.0 – 3.0
	Minimum	**2.0 Mils**

NOTE: Coating must be heat cured at 400°F for one (1) hour.

V.3 System No. 90E-92 Inorganic Zinc (750°F Max)

Surface Preparation: SSPC-SP10 Near White Metal Blast Cleaning

		DFT (Mils)
Coating:	90E-02 Tneme-Zinc	2.0 – 3.5

NOTE: Coating will have a greenish gray color but will not require curing at elevated temperatures.

Attachment: Holly Hill LS_13 Rehabilitation_Bid Set Specifications_04.30.19 (2019-R-38 : Lift Station #13 Rehabilitation)

15.14 SURFACES EXPOSED TO H_2S/H_2SO_4 (SEVERE EXPOSURE/IMMERSION)

W. CEMENTITIOUS SURFACES

W.1 System No. 120-1 Vinyl Ester (Concrete)

Surface Preparation: Abrasive blast clean per SSPC-SP13 to remove all laitance, fines, and contamination.

		DFT (Mils)
1st Coat:	120-5002 Vinester Primer	6.0 – 10.0*
2nd Coat:	120-5003 Vinester F&S	As Required*
3rd Coat:	120-5002 Vinester Primer	12.0 – 18.0
4th Coat:	120-5001 Vinester Topcoat	12.0 – 18.0
	Total	30.0 – 46.0
	Minimum	**36.0 Mils +**

*First coat to be applied by roller application or spray applied followed by backrolling.

**All surface voids, cracks, pinholes, and other defects must be filled flush with the adjacent surfaces by putty knife, trowel, float, squeegee, or other suitable method.

X. FERROUS METAL SURFACES

X.1 System No. 120-2 Vinyl Ester (Steel)

Surface Preparation: SSPC-SP5 White Metal Blast Cleaning (3.0 Mil Profile)

		DFT (Mils)
1st Coat:	120-5002 Vinester Primer	12.0 – 18.0
2nd Coat:	120-5001 Vinester Topcoat	12.0 – 18.0
	Total	24.0 – 36.0
	Minimum	**30.0 Mils**

NOTE: Application of a stripe coat to all weld seams and plate edges is recommended.

Attachment: Holly Hill LS_13 Rehabilitation_Bid Set Specifications_04.30.19 (2019-R-38 : Lift Station #13 Rehabilitation)

15.15 EXTERIOR OF PRESTRESSED CONCRETE TANKS

Z.1 System No. 156-3 (New Tanks)

Surface Preparation: Surface to be clean and dry.

		DFT (Mils)
1st Coat:	156-Color Envirocrete	4.0 – 6.0
2nd Coat:	156-Color Envirocrete	4.0 – 6.0
	Total	8.0 – 12.0
	Minimum	**10.0 Mils**

Z.2 System No. 180-3 (New Tanks)

Surface Preparation: Surface to be clean and dry.

		DFT (Mils)
1st Coat:	Thoroseal or equal	1/16"
2nd Coat:	180 W.B. Tneme-Crete	2.0 – 4.0
3rd Coat:	180 W.B. Tneme-Crete	2.0 – 4.0
	Minimum	**1/16" +**

Z.3 System No. 6-6 (New Tanks)

Surface Preparation: Surfaces to be clean and dry.

		DFT (Mils)
1st Coat:	Thoroseal or equal	1/16"
2nd Coat:	6-Tneme-Cryl	2.0 – 3.0
3rd Coat:	6-Tneme-Cryl	2.0 – 3.0
	Minimum	**1/16" +**

Attachment: Holly Hill LS_13 Rehabilitation_Bid Set Specifications_04.30.19 (2019-R-38 : Lift Station #13 Rehabilitation)

Z.4 System No. 156-4 Existing Tanks (Previously Painted)

Surface Preparation: Remove all dirt, oil, grease, chalk, and loose paint per High Pressure Water Blast (Min 3500 PSI).

		DFT (Mils)
1st Coat:	151 Elasto-Grip	1.0 – 2.5
Stripe Coat:	Stripe all hairline cracks with a brushed coat of Series 156 Envirocrete	3.0 – 5.0
Topcoat:	156-Envirocrete	4.0 – 6.0
	Cracks	8.0 – 13.5
	Other	5.0 – 8.5

Z.5 System 180-4 Existing Tanks (Previously Painted)

Surface Preparation: Remove all dirt, oil, grease, chalk, and loose paint per High Pressure Water Blast (Min 3500 PSI).

		DFT (Mils)
Stripe Coat:	180 W.B. Tneme-Crete (Applied by roller to all visible cracks)	2.0 – 4.0
1st Coat:	180 W.B. Tneme-Crete	2.0 – 4.0
2nd Coat:	180 W.B. Tneme-Crete	2.0 – 4.0
	Total	6.0 – 12.0
	Minimum	**5.0 Mils (2 coats)**

NOTE: May be spray applied in a single coat at 4.0 – 8.0 mils.

Attachment: Holly Hill LS_13 Rehabilitation_Bid Set Specifications_04.30.19 (2019-R-38 : Lift Station #13 Rehabilitation)

15.16 SECONDARY CONTAINMENT AREAS

AA.1 System No. 61-4 Epoxy Polyamide (For Fuel Oils)

Surface Preparation: Surface shall be clean and dry. Allow new concrete to cure for 28 days. Abrasive Blast Clean per SSPC-SP7 (Brush Off Blast).

		DFT (Mils)
Primer:	61-5002 Tneme-Liner (Beige)	4.0 – 6.0
Topcoat:	61-5001 Tneme-Liner (Gray)	4.0 – 6.0
	Total	8.0 – 12.0
	Minimum	**10.0 Mils**

NOTE: This system will provide excellent resistance to most chemicals including petrochemicals. Use Tnemec Series 63-1500 between coats as a filler and surfacer wherever it is required.

AA.2 System No. 61-1 Amine Epoxy (For Caustics)

Surface Preparation: Surfaces shall be clean and dry. Allow new concrete to cure for 28 days. Abrasive Blast Clean per SSPC-SP6 (Brush Off Blast).

		DFT (Mils)
Primer:	61-5002 Tneme-Liner (Beige)	8.0 – 12.0
Topcoat:	61-5001 Tneme-Liner (Gray)	8.0 – 12.0
	Total	16.0 – 24.0

NOTE: This system offers superior chemical resistance to a wide range of chemicals. Use Tnemec Series 63-1500 between coats as a filler and surfacer wherever it is required.

Attachment: Holly Hill LS_13 Rehabilitation_Bid Set Specifications_04.30.19 (2019-R-38 : Lift Station #13 Rehabilitation)

AA.3 System 262-1 Flexible Polyurethane

Surface Preparation: Surfaces shall be clean and dry. Allow new concrete to cure for 28 days. Abrasive Blast Clean per SSPC-SP7 (Brush Off Blast).

		DFT (Mils)
Primer:	66 Hi-Build Epoxoline	5.0
Topcoat:	262 Elasto-Shield (Black)	50
	Total	55 Mils

NOTE: Multiple passes may be required to achieve recommended film thickness. See Elasto-Shield Application Guide for additional instructions. This product is only available in black. Repair all cracks, bugholes, and spalled areas with Series 265 Elasto-Shield TG prior to application of Series 262.

AA.4 System No. 120-3 Vinyl Ester (For Acids)

Surface Preparation: Abrasive blast clean per SSPC-SP13.

		DFT (Mils)
Filler Surfacer:	120-5003 Vinester F & S	As Required
1st Coat:	120-5002 Vinester Primer	15.0 – 18.0
2nd Coat:	120-5001 Vinester Topcoat	15.0 – 18.0
	Total	30.0 – 69.0
	Minimum	**30.0 Mils**

NOTES: Use 120-5003 Vinester F & S to fill all cracks, bugholes, and other surface voids, and smooth all rough areas.

Attachment: Holly Hill LS_13 Rehabilitation_Bid Set Specifications_04.30.19 (2019-R-38 : Lift Station #13 Rehabilitation)

AA.5 System No. 275 Fiber Reinforced Novolac Epoxy

Surface Preparation: Allow new concrete to cure 28 days. Abrasive blast clean per SSPC-SP13.

		DFT (Mils)
Filler Surfacer:	Fill all voids with Tnemec Series 201 Epoxoprime mixed with fumed silica	As Required
Prime Coat:	Tnemec Series 201 Epoxoprime	6.0 – 8.0
Body Coat:	Tnemec Series 275 Stranlok (Fiber Reinforced Novolac Epoxy) applied by spray or trowel	30.0 – 35.0
Topcoat:	Tnemec Series 282 Tneme-Glaze (Novolac Epoxy)	6.0 – 8.0
	Total	42.0 – 51.0

15.17 CLEAR WATER REPELLENT FOR CONCRETE, MASONRY & BRICK

BB.1 Silane/Siloxane Sealer (Water Based)

Surface Preparation: Allow new concrete to cure 28 days. Clean surfaces to be sealed by abrasive blasting or waterblasting.

Coating (Brick, Concrete):	PRIME A PELL H_2O	125 – 200 SF/Gal
Coating (Split Faced or Porous Masonry:	PRIME A PELL H_2O	65 – 100 SF/Gal

BB.2 Silane/Siloxane Sealer w/Concrete Stain

Sealer:	Chemprobe Prime A Pell H_2O	65 – 200 SF/Gal
Concrete Stain:	Chemprobe Conformal Stain (2 coats)	75 – 200 SF/Gal/Ct

Attachment: Holly Hill LS_13 Rehabilitation_Bid Set Specifications_04.30.19 (2019-R-38 : Lift Station #13 Rehabilitation)

15.18 MANHOLES, WET WELLS & LIFT STATIONS

CC.1 System No. 120-1 Vinyl Ester

Surface Preparation: Abrasive blast clean to remove all laitance, fines, and contamination.

		DFT (Mils)
1st Coat:	120-5002 Vinester Primer	6.0 – 10.0*
2nd Coat:	120-5003 Vinester F&S	As Required*
3rd Coat:	120-5002 Vinester Primer	12.0 – 18.0
4th Coat:	120-5001 Vinester Topcoat	12.0 – 18.0
	Total	30.0 – 46.0
	Minimum	**36.0 Mils +**

*First coat to be applied by roller application or spray applied followed by backrolling.

**All surface voids, cracks, pinholes, and other defects must be filled flush with the adjacent surfaces by putty knife, trowel, float, squeegee, or other suitable method.

CC.2 System No. 100-1 Crystalline Waterproofing

Surface Preparation: Surface to be clean and roughened by Brush Blasting, Acid Etching, or High Pressure Water Blasting (3500 PSI) with turbo tips.

1st Coat:	XYPEX Concentrate @ (1.5#/SY)	1/16" ±
2nd Coat:	XYPEX Modified @ (1.5#/SY)	1/16" ±

NOTE: This system can be applied to concrete that is still wet or has not developed final cure. It can be used where wet surface conditions exist or where there is the potential for water intrusion due to hydrostatic pressure.

Attachment: Holly Hill LS_13 Rehabilitation_Bid Set Specifications_04.30.19 (2019-R-38 : Lift Station #13 Rehabilitation)

15.19 CANAL PIPE CROSSINGS

DD.1 System 90-97 Zinc/Epoxy/Urethane for New Pipe or Pipe Requiring Removal of Existing Coatings

Surface Preparation: SSPC-SP6 Commercial Blast Cleaning

		DFT (Mils)
Primer:	90-97 Tneme-Zinc	2.5 – 3.5
2nd Coat:	66-Color Hi-Build Epoxoline	2.0 – 3.0
3rd Coat:	73-Color Endura-Shield	2.0 – 3.0
	Total	6.5 – 9.5
	Minimum	**8.0 Mils**

DD.2 System No. 135-2 High Build, High Gloss Urethane for Marginally Cleaned Surfaces or Topcoating Over Existing Systems

Surface Preparation: High Pressure Water Blast (Min 3500 PSI) or Solvent Clean (SSPC-SP1) and Spot Hand and Power Tool Clean (SSPC-SP2 & 3) or Brush Blast (SSPC-SP7). Existing coatings must be clean, dry, and tightly adhering prior to application of coatings.

		DFT (Mils)
Spot Primer:	135 Chembuild	3.0 – 4.0 (Spots)
Tie Coat:	135 Chembuild	3.0 – 4.0
2nd Coat:	73-Color Endura-Shield	2.0 – 3.0
	Total	5.0 – 7.0 ±
	Minimum	**5.0 Mils**

NOTE: A test Patch is always recommended to insure proper adhesion to existing coatings without lifting of existing coatings.

Attachment: Holly Hill LS_13 Rehabilitation_Bid Set Specifications_04.30.19 (2019-R-38 : Lift Station #13 Rehabilitation)

15.20 REPAINTING OF METAL BUILDING PANELS

EE.1 Exterior of Metal Building Panels

Surface Preparation: Pressure clean (3000 PSI) and spot SP2 & 3 Hand and Power Tool Cleaning.

		DFT (Mils)
Spot Primer:	135 Chembuild	3.0 – 5.0 (Spots)
Tie Coat:	30 Spra-Saf EN	2.0 – 4.0
2nd Coat:	30 Spra-Saf EN	2.0 – 4.0
	Total	4.0 – 8.0 ±
	Minimum	**4.0 Mils**

NOTE: Test patch is strongly recommended.

EE.2 Exterior Miscellaneous Metal Trim

Surface Preparation: Pressure clean (3000 PSI) or solvent clean per SSPC-SP1. Spot SP2 & 3 Hand & Power Tool Cleaning.

		DFT (Mils)
Spot Primer:	135 Chembuild	2.0 – 4.0 (Spots)
Tie Coat:	135 Chembuild	2.0 – 4.0
Topcoat:	73 Endura-Shield	2.0 – 3.0
	Total	4.0 – 7.0 ±
	Minimum	**4.0 Mils**

NOTE: Test patch is strongly recommended.

Attachment: Holly Hill LS_13 Rehabilitation_Bid Set Specifications_04.30.19 (2019-R-38 : Lift Station #13 Rehabilitation)

COATING SCHEDULE

SUBSTRATE	SUBSTRATE & SERVICE 3rd Clarifier	SURFACE PREPARATION	COAT [SERIES # (DFT-MILS)]		
			1st CT	2nd CT	3rd CT
C.5	Carbon Steel and Pipe (Immersion and Below Grade)	SSPC-SP10	46-413 (8.0-10.0)	46-413 (8.0-10.0)	
L.2	Precast Concrete Wet Well Top Exterior Below Grade	Surface shall be clean and dry	46-413 (14.0 - 20.0)		

END OF SECTION

Attachment: Holly Hill LS_13 Rehabilitation_Bid Set Specifications_04.30.19 (2019-R-38 : Lift Station #13 Rehabilitation)

SECTION 26 05 00

COMMON WORK RESULTS FOR ELECTRICAL

PART 1 – GENERAL

1.01 DESCRIPTION OF WORK

A. Description of Work. Extent of electrical connections (EICn) for equipment is indicated by drawings and schedules. Electric connections are hereby defined to include, but not necessarily limited to, connections for providing electrical power to equipment.

B. The foregoing "General Requirements" form a part of this contract and all the requirements set forth shall be binding upon this subcontractor.

C. The work required under this Division shall include all materials, labor and auxiliaries required to install a complete and properly operating electrical system. The electrical system required under this Division consists basically of, but is not limited to the following:

1. Complete distribution system for lighting including the necessary feeders, branch circuits, lighting fixtures, control switches and receptacles.

2. Complete distribution system for power including feeders, and connections to motors and other power loads.

3. Underground feeders to panelboards, motor control centers including necessary risers, etc.

4. A building ground system and special grounds as required.

5. Final connections to equipment as noted or required.

6. Motor control centers.

7. Connecting motors and manual control (unless otherwise specified).

8. Painting (of special equipment).

9. Electrical specialties.

Attachment: Holly Hill LS_13 Rehabilitation_Bid Set Specifications_04.30.19 (2019-R-38 : Lift Station #13 Rehabilitation)

10. Concrete work for pad mounted equipment, encased raceways, or grade mounted lighting.

11. Furnishing and installing all necessary access panels.

12. Exterior lighting system.

13. Fire alarm and fire detection system.

14. Lightning and grounding system.

15. A complete conduit and wire schedule.

D. Extent of electrical related work required by this section is indicated on drawings and schedules, and/or specified in other sections.

E. Types of electrical related work specified in this section include the following:

1. Access to Electrical Work.

2. Access doors in walls, ceiling, and floors.

3. Removable cover plates in walls, ceilings, and floors.

4. Excavating for Electrical Work:

   a. Underground electrical wiring and service tunnels.
   b. Power and lighting poles.

5. Concrete for Electrical Work:

   a. Electrical equipment foundations and mounting pads.
   b. Patching concrete which has been cut to accommodate electrical work.

6. Printing and Electrical Work:

   a. Ferrous metal surfaces (does not include stainless steel).
   b. Exterior cast-iron handhole and manhole covers and similar units are excluded from work to be painted.
   c. Aluminum, which is not specifically anodized as final finish is so indicated.
   d. Concealed work is excluded from painting, except for interior work in "high humidity" areas.

Attachment: Holly Hill LS_13 Rehabilitation_Bid Set Specifications_04.30.19 (2019-R-38 : Lift Station #13 Rehabilitation)

PART 2 – MATERIALS (NOT USED)

PART 3 – EXECUTION (NOT USED)

END OF SECTION

Attachment: Holly Hill LS_13 Rehabilitation_Bid Set Specifications_04.30.19 (2019-R-38 : Lift Station #13 Rehabilitation)

SECTION 26 05 01

ELECTRICAL REFERENCE SYMBOLS

PART 1 – GENERAL

1.01 SYMBOLS

A. The foregoing "General Requirements" form a part of this contract and all the requirements set forth shall be binding upon this subcontractor.

B. In general, the symbols used on the drawings conform to the Standard Symbols of the Institute of Electrical and Electronic Engineers, with the exception of special systems or agencies as hereinafter noted.

1. Special Symbols as shown in schedules or legends.

1.02 ABBREVIATIONS

A. The following abbreviations or initials are used:

A/C	Air Conditioning
AC	Alternating Current
AFF	Above Finished Floor
AFG	Above Finished Grade
AHU	Air Handling Unit
AIC	Amps Interrupting Capacity
AMP	Ampere
ANSI	American National Standards Institute
ATS	Automatic Transfer Switch
AUX	Auxiliary
AWG	American Wire Gauge
C	Conduit
CB	Circuit Breaker
CBM	Certified Ballast Manufacturers
Clg	Ceiling
COND	Conductor

Attachment: Holly Hill LS_13 Rehabilitation_Bid Set Specifications_04.30.19 (2019-R-38 : Lift Station #13 Rehabilitation)

Conn	Connection
CT	Current Transformer
CU	Copper
DO	Draw Out
DN	Down
DPST	Double Pole Single Throw
EC	Electrical Contractor
EMT	Electric Metallic Tubing
EO	Electrically Operated
FLA	Full Load Amperes
FM	Factory Mutual
FT	Feet
GFI	Ground Fault Interrupting
Gnd	Ground
Horiz	Horizontal
Hp	Horsepower
Hr	Hour
IEEE	Institute of Electrical and Electronic Engineers
IES	Illuminating Engineering Society
In	Inches
IPCEA	Insulated Power Cable Engineers Association
JB	Junction Box
KV	Kilovolt
KVA	Kilo-Volt-Amps
KW	Kilowatts
LBS	Pounds
Max	Maximum
MCB	Main Circuit Breaker
MCP	Motor Circuit Protector
Min	Minimum
MLO	Main Lugs Only

Attachment: Holly Hill LS_13 Rehabilitation_Bid Set Specifications_04.30.19 (2019-R-38 : Lift Station #13 Rehabilitation)

MTD	Mounted
N	Neutral
NEC	National Electric Code
NECA	National Electrical Contractors
NEMA	National Electrical Manufacturers Association
NFPA	National Fire Protection Association
NIC	Not in Contract
NF	Non-Fused
No	Number
/O	Phase
OL	Overload
OLS	Overloads
OSHA	Occupational Safety and Health Act
P	Pole
PB	Pullbox
PNL	Panel
PR	Pair
Pri	Primary
PT	Potential Transformer
PVC	Polyvinal Chloride
RMS	Root-Means-Square
Recept.	Receptacle
SCA	Short Circuit Amps
SH	Shielded
S/N	Solid Neutral
SPST	Single Pole Single Throw
SW	Switch
SWBD	Switchboard
TEL	Telephone
TYP	Typical
T/P	Twisted Pair

Attachment: Holly Hill LS_13 Rehabilitation_Bid Set Specifications_04.30.19 (2019-R-38 : Lift Station #13 Rehabilitation)

Temp	Temperature
UL	Underwriters Laboratories
V	Volt
W	Wire
WP	Weatherproof

PART 2 – MATERIALS (NOT USED)

PART 3 – EXECUTION (NOT USED)

END OF SECTION

Attachment: Holly Hill LS_13 Rehabilitation_Bid Set Specifications_04.30.19 (2019-R-38 : Lift Station #13 Rehabilitation)

SECTION 26 05 02

CODES, FEES, AND STANDARDS

PART 1 – GENERAL

1.01 CODES AND FEES

A. The foregoing "General Requirements" form a part of this contract and all the requirements set forth shall be binding upon this subcontractor.

B. Install in accordance with latest edition of the National Electric Code and the regulations of governing local, State, County, and other applicable codes. Pay for all required licenses, fees, and inspections.

1.02 STANDARDS

A. All materials shall be new and free of defects, and shall be U.L. listed, bear the U.L. label or be labeled or listed with an approved, nationally recognized Electrical Testing Agency. Where no labeling or listing service is available for certain types of equipment, test data shall be submitted to prove to the ENGINEER that equipment meets or exceeds available standards.

PART 2 – PRODUCTS (NOT USED)

PART 3 – EXECUTION (NOT USED)

END OF SECTION

Attachment: Holly Hill LS_13 Rehabilitation_Bid Set Specifications_04.30.19 (2019-R-38 : Lift Station #13 Rehabilitation)

SECTION 26 05 03

SPECIAL REQUIREMENTS

PART 1 – GENERAL

1.01 AUXILIARIES AND ACCESSORIES

A. The foregoing "Project Requirements", Div.1, Section 01 00 00, form a part of this contract and all the requirements set forth shall be binding upon this subcontractor.

B. Include all auxiliaries and accessories for complete and properly operating systems.

1.02 LAYOUT OF WORK

A. Drawings are diagrammatic. Correlate final equipment locations with governing Architectural and Structural drawings. Lay out before installation so that all trades may install equipment in spaces available. Provide coordination as required for installation in a neat and workmanlike manner.

1.03 INVESTIGATION OF SITE

A. Check site and existing conditions thoroughly before bidding. Advise ENGINEER in writing of discrepancies or questions noted.

1.04 SUPERVISION OF THE WORK

A. Provide field superintendent who has had a minimum of four (4) years previous successful experience on projects of comparable sizes and complexity. At least one (1) member of the Electrical Contracting Firm shall hold a State Master Certificate of Competency.

1.05 COORDINATION

A. Provide all required coordination and supervision where work connects to or is affected by work of others, and comply with all requirements affecting this Division. Work required under other divisions, specifications, or drawings to be performed by this Division shall be coordinated with the CONTRACTOR and such work performed at no additional cost to OWNER.

1.06 BASIS FOR WIRING DESIGN

A. The drawings and specifications describe specific sizes of switches, breakers, fuses, conduits, conductors, motor starters, and other items of wiring equipment. Wherever the CONTRACTOR provides power consuming equipment which differs from

Attachment: Holly Hill LS_13 Rehabilitation_Bid Set Specifications_04.30.19 (2019-R-38 : Lift Station #13 Rehabilitation)

drawings and specifications, the wiring and associated circuit components for such equipment shall be changed to proper sizes to match at no additional expense to the OWNER.

1.07 PROVISIONS FOR OPENINGS

A. Locate all openings required for work performed under this section. Provide sleeves, guards, or other approved methods to allow passage of items installed under this section.

1.08 CONCRETE PADS

A. Furnish and install reinforced concrete pads for transformers, and motor control centers, of size as shown on the drawings or required. Unless otherwise noted, pads shall be four inches (4") high and shall exceed dimensions of equipment being set on them, including future sections, by six inches (6") on all sides, except when equipment is flush against a wall, then the side or sides against the wall shall be flush against a wall, then the side or sides against the wall shall be flush with the equipment. Chamfer top edges one-half inch (1/2") with forms. Trowel all surface smooth.

1.09 SURFACE MOUNTED EQUIPMENT

A. Surface mount fixtures, outlets, cabinets, conduit, panels, etc., shall have finish or shall be painted as directed by ENGINEER. Paint shall be in accordance with other applicable sections of these specifications.

1.10 MATERIALS

A. Reference: “General Requirements of the Contract”, Div. 1.

1.11 SUBSTITUTIONS

A. Reference: “General Requirements of the Contract”, Div. 1.

1.12 ADDITIONAL REQUIREMENTS

A. Keep two (2) sets of white prints on the job, and neatly marked up design drawings each day as components are installed. Different colored pencils shall be used as directed for different systems. Cost of prints shall be included under this Division. All items on Progress Drawings shall be shown in actual location installed. Change any equipment schedules to agree with items actually furnished.

B. Prior to request for final payment furnish a set of neatly marked prints of drawings to General Contractor.

Attachment: Holly Hill LS_13 Rehabilitation_Bid Set Specifications_04.30.19 (2019-R-38 : Lift Station #13 Rehabilitation)

C. Submit for checking a specific set of written Operating Instructions on each item which required instructions to operate. After approval, provide one (1) additional copy for insertion in each Technical Information Brochure.

D. Submit for approval Maintenance Information consisting of manufacturer's printed instructions and parts lists for each major item of equipment. After approval, insert information in each Technical Information Brochure.

E. The work required under this Division shall include a one (1)-year guarantee unless otherwise noted. This guarantee shall be by the CONTRACTOR to the OWNER for any defective workmanship or material which has been furnished under this Contract at no cost to the OWNER for a period of one (1) year from the date of substantial completion of the System. This guarantee shall not include light bulbs in service after one (1) month from date of Substantial Completion of the System. Explain the provisions of guarantee to the OWNER at the "Demonstration of Completed System".

F. All work on the System shall be completed, and all forms and other information shall be submitted for approval one (1) week before the request for final inspection of the building.

1.13 CUTTING AND PATCHING

A. Reference: "General Requirements of the Contract", Div. 1.

B. Supplementary Requirements: Any cutting of work in place shall be patched and decorated by such mechanics and in such a manner that the quality of workmanship and finish shall be compatible with that of adjacent construction.

1.14 PROPRIETARY NAMES

A. For convenience of description and as a standard for grade, type, quality, and performance characteristics, proprietary names are included with some description. This does not imply preference to specific manufacturers (except where multiple choice is specified or where otherwise noted to match existing conditions), but minimum requirements with approval to be made by the ENGINEER.

PART 2 – PRODUCTS (NOT USED)

PART 3 – EXECUTION (NOT USED)

END OF SECTION

Attachment: Holly Hill LS_13 Rehabilitation_Bid Set Specifications_04.30.19 (2019-R-38 : Lift Station #13 Rehabilitation)

SECTION 26 05 04

DEMONSTRATION OF COMPLETED ELECTRICAL SYSTEMS

PART 1 – GENERAL

1.01 SCOPE

A. Demonstrate the essential features of the following electrical systems:

1. Communications systems.

   a. Alarms and bells.
   b. Fire detection devices, smoke detection devices.
   c. Telephone equipment.

2. Electrical entrance equipment.

   a. Circuit breakers.
   b. Fuses and fuse holders.
   c. Meter.

3. Electrical systems, controls, and equipment.

   a. Electrical power equipment.
   b. Motor control centers.
   c. Motor control devices.
   d. Relays.
   e. Special transformers.
   f. Starting devices.

4. Lighting fixtures (include relamping and replacing lenses).

   a. Exit and safety fixtures.
   b. Fixtures, indoor and outdoor.
   c. Floodlighting.

5. Lightning protection system.

Attachment: Holly Hill LS_13 Rehabilitation_Bid Set Specifications_04.30.19 (2019-R-38 : Lift Station #13 Rehabilitation)

6. Panel boards.

   a. Distribution panels.
   b. Lighting panels.
   c. Load centers.
   d. Main panels, power panels.

7. Standby Electrical Equipment.

   a. Batteries.
   b. Battery Chargers.
   c. Motor-generator sets.
   d. Transfer switch.
   e. Day Tank.
   f. Controls and alarms.

8. Wiring devices.

   a. Face plates.
   b. Low-voltage controls.
   c. Outlets: convenience, special purpose.
   d. Switches: regular, time.

B. Each system shall be demonstrated once only, after completion of testing.

1.02 TIME

A. The demonstration shall be held upon completion of all systems at a date to be agreed upon in writing by the OWNER or his representative.

1.03 ATTENDING PARTIES

A. The demonstration shall be held by this CONTRACTOR in the presence of the OWNER, and the manufacturer's representative.

1.04 DEMONSTRATION

A. Demonstrate the function and location (in the structure) of each system, and indicate its relationship to the riser diagrams and drawings.

B. Demonstrate by "start-stop operation" how to work the controls, how to reset protective devices, how to replace fuses, and what to do in the case of emergency.

Attachment: Holly Hill LS_13 Rehabilitation_Bid Set Specifications_04.30.19 (2019-R-38 : Lift Station #13 Rehabilitation)

1.05 CERTIFICATE OF COMPLETED DEMONSTRATION

A. Submit five (5) copies of "Certificate of Completed Demonstration", memo signed by the CONTRACTOR, Subcontractor, and OWNER and insert one (1) copy in each Technical Information Brochure.

PART 2 – PRODUCTS (NOT USED)

PART 3 – EXECUTION (NOT USED)

END OF SECTION

Attachment: Holly Hill LS_13 Rehabilitation_Bid Set Specifications_04.30.19 (2019-R-38 : Lift Station #13 Rehabilitation)

SECTION 26 05 06

ELECTRICAL CONNECTION FOR EQUIPMENT

PART 1 – GENERAL

A. Type of electrical power connections specified in this section includes the following:

1. To motors,

2. To motor starters,

3. From motor starters to motors,

4. To lighting fixtures,

5. To transformers, rheostats, and similar current adjustment features of equipment,

6. To ground, and

7. To master units of communication, signal, alarm, clock, public address, sound, and video systems.

PART 2 – QUALITY ASSURANCE

2.01 NEC COMPLIANCE.

A. Comply with applicable portions of NEC as to type products used and installation of electrical power connections (terminals and splices), for junction boxes, motor starters, and disconnect switches.

B. NEMA Compliance. Comply with applicable portions of NEMA standards pertaining to electrical connections for equipment.

C. ANSI Compliance. Comply with applicable ANSI standards pertaining to products and installation of electrical connections.

D. Splices and terminations of types indicted.

2.02 METAL CONDUIT, TUBING, AND FITTINGS

A. General. Provide metal conduit, tubing and fittings of types, grades, sizes, and weights (wall thicknesses) indicated for each type service. Where types and grades are not indicated, provide proper selection as determined for installer to fulfill wiring requirements; comply with NEC requirements for raceways. Provide products

Attachment: Holly Hill LS_13 Rehabilitation_Bid Set Specifications_04.30.19 (2019-R-38 : Lift Station #13 Rehabilitation)

complying with Division 26 basic materials and methods section "Raceways", and in accordance with the following listing of metal conduit, tubing, and fittings:

1. Rigid Steel Conduit Flexible Metal Conduit Fittings.

2. Rigid Metal Conduit Fittings Liquid-Tight Flexible Metal Conduit.

3. Electrical Metallic Tubing Liquid-Tight Flexible Metal Conduit Fittings.

4. Flexible Metal Conduit.

2.03 WIRE, CABLE, AND CONNECTORS

A. General. Provide wires, cables and connectors complying with Division 26 basic materials and methods section "Wire and Cables".

B. Wire. Unless otherwise indicated, provide wires/conductors for electrical connections which match wires/conductors of wiring of wiring supplying power.

C. Connectors and Terminals. Provide electrical connectors and terminals as recommended by connector and terminal manufacturer for intended applications.

2.04 ELECTRICAL CONNECTION ACCESSORIES

A. Provide electrical insulating tape, heat-shrinkable insulating tubing and boots, solder, electrical soldering flux, wire nuts and cable ties as recommended for use by accessories manufacturers for type services indicated.

PART 3 – EXECUTION

3.01 INSTALLATION OF ELECTRICAL CONNECTIONS

A. Install electrical connections as indicated; in accordance with connector manufacturer's written instructions and with recognized industry practices, and complying with requirements of NEC and NECA's "Standard of Installation" to ensure that products fulfill requirements.

B. Connect electrical power supply conductors to equipment conductors in accordance with equipment manufacturer's written instructions and wiring diagrams. Wherever possible, mate and match conductors of electrical connections for proper interface between electrical power supplies and installed equipment.

C. Coordinate installation of electrical connections for equipment with equipment installation work.

D. Cover splices with electrical insulation equivalent to, or of higher rating, than insulation on conductors being spliced.

Attachment: Holly Hill LS_13 Rehabilitation_Bid Set Specifications_04.30.19 (2019-R-38 : Lift Station #13 Rehabilitation)

E. Prepare cables and wires by cutting and stripping covering armor, jacket, and insulation properly to ensure uniform and neat appearance where cables and wires are terminated.

F. Trim cables and wires as short as practical and arrange routing to facilitate inspection, testing and maintenance.

G. Tighten wire-binding connector screws firmly.

H. Provide flexible conduit for motor connections and for other electrical equipment connections where subject to movement and vibration.

I. Provide liquid-tight flexible conduit for connection of motors and for other electrical equipment where subject to movement and vibration, and also where subjected to one or more of the following conditions:

1. Exterior location.

2. Moist or humid atmosphere where condensate can be expected to accumulate.

3. Corrosive atmosphere.

4. Subjected to water spray.

5. Subjected to dripping oil, grease, or water.

J. Refer to basic materials and methods section for identification of electrical power supply conductor terminations with markers approved as to types, colors, letter, and marker sizes, by Architect/Engineer. Affix markers at each point of termination, as close as possible to each point of connection.

END OF SECTION

Attachment: Holly Hill LS_13 Rehabilitation_Bid Set Specifications_04.30.19 (2019-R-38 : Lift Station #13 Rehabilitation)

SECTION 26 05 13

WIRES AND CABLES

PART 1 – GENERAL

1.01 DESCRIPTION OF WORK

A. Extent of electrical wire and electrical cable work is indicated by drawings and schedules.

B. Types of wire, cable and connectors in this section include the following:

1. Copper Conductors.

2. Tab Type Connectors.

3. Split-Bolt Connectors.

C. Applications for wire, cable and connectors required for project as follows:

1. Power Distribution circuitry.

2. Lighting Circuitry.

3. Appliance and Equipment circuitry.

4. Motor-Branch Circuitry.

PART 2 – QUALITY ASSURANCE

2.01 COMPLIANCE

A. Comply with NEC as applicable to construction and installation of electrical wire, cable, and connectors.

B. UL Compliance. Comply with UL standards pertaining to wire, cable and connectors.

C. UL Labels. Provide electrical wires, cables and connectors which have been UL listed and labeled.

D. NEMA/ICEA Compliance. Comply with applicable portions of NEMA/Insulated Cable Engineers Association standards pertaining to material, construction and testing of wire and cable.

Attachment: Holly Hill LS_13 Rehabilitation_Bid Set Specifications_04.30.19 (2019-R-38 : Lift Station #13 Rehabilitation)

E. ANSI/ASTM. Comply with applicable portions of ANSI/ASTM standards pertaining to construction of wire and cable.

PART 3 – EXECUTION

3.01 ACCEPTABLE MANUFACTURERS

A. Manufacturers. Subject to compliance with requirements, provide products of one of the following (for each type of wire, cable, and connector):

1. Wire and Cable.

a. General Cable Corporation.
b. Southwire Company.
c. Triangle PWC, Inc.

2. Connectors.

a. AMP, Inc.
b. Burndy Corporation.
c. Ideal Industries, Inc.
d. Thomas and Betts Company.

3.02 WIRE, CABLE, AND CONNECTORS

A. General. Except as otherwise indicated, provide wire, cable, and connectors of manufacturer's standard materials, as indicated by published product information; designed and constructed as recommended by manufacturer, and as required for installation.

B. Wire. Provide factory-fabricated wire of sizes, ratings, materials, and types indicated for each service. Where not indicated, provide proper selection as determined by installer to comply with project's installation requirements and NEC standards. Select from the following types, materials, conductors, configurations, insulation, and coverings:

1. UL Type: MTW.

2. UL Type: THHN.

3. UL Type: THWN.

Attachment: Holly Hill LS_13 Rehabilitation_Bid Set Specifications_04.30.19 (2019-R-38 : Lift Station #13 Rehabilitation)

C. Material: Copper.

1. Conductors: Solid (AWG 20 to AWG 8 only).

2. Conductors: Concentric-lay-stranded (standard flexibility).

3. Outer Covering: Thermoplastic.

D. Cable. Provide factory-fabricated, metal connectors of sizes, ratings, materials, types, and classes as indicated for each service. Where not indicated, provide proper selection as determined by installer to comply with installation requirements and NEC standards.

3.03 CONNECTORS

A. Provide factory-fabricated, metal connectors of sizes, ratings, material, types, and classes as indicated for each service. Where not indicated, provide proper selection as determined by installer to comply with installation requirements and NEC standards. Select from the following types, classes, kinds, and styles.

1. Type: Pressure.

2. Class: Non-insulated.

3. Kind: Copper (for Cu to Cu connection).

4. Style: Butt connection.

5. Style: Split-bolt parallel connection.

6. Style: Tap connection.

7. Style: Pigtail connection.

PART 4 – INSTALLATION

1.01 GENERAL

A. Install electrical cables, wires and connectors as indicated, in compliance with manufacturer's written instruction, applicable requirements of NEC and NECA's "Standard of Installation", and in accordance with recognized industry practices.

B. Coordinate cable and wire installation work with electrical raceway and equipment installation work, as necessary for proper interface.

Attachment: Holly Hill LS_13 Rehabilitation_Bid Set Specifications_04.30.19 (2019-R-38 : Lift Station #13 Rehabilitation)

C. Use pulling compound of lubricant, where necessary; compound must not deteriorate conductor or installation.

D. Keep conductor splices to a minimum.

E. Install splices and tapes which have mechanical strength and insulation rating equivalent-or-better than conductor.

F. Field Quality Control. Prior to delivery, test cable and wire for continuity of circuitry, and also for short circuits. Correct malfunctions when detected.

G. Subsequent to wire and cable hook-ups, energize circuitry and demonstrate functioning in accordance with requirements.

END OF SECTION

Attachment: Holly Hill LS_13 Rehabilitation_Bid Set Specifications_04.30.19 (2019-R-38 : Lift Station #13 Rehabilitation)

SECTION 26 05 26

GROUNDING

PART 1 – GENERAL

1.01 DESCRIPTION OF WORK

A. Extent of grounding work is indicated by drawings and schedules.

B. Application of grounding work in this section includes the following:

1. Underground Metal Piping.

2. Metal Building Frames.

3. Grounding Electrodes.

4. Separately Derived Systems.

5. Service Equipment.

6. Enclosures.

7. Equipment.

C. Requirements of this section apply to electrical grounding work specified elsewhere in these specifications.

D. Conductors. Copper cable; strand dia. 0.045 foot (0.045'); 14 strands.

E. Ground Rods. Solid copper five-eighths inch (5/8") dia. by 10 feet (10').

PART 2 – INSTALLATION

2.10 GENERAL

A. Install electrical grounding systems where shown, in accordance with applicable portion of NEC, with NECA's "Standard of Installation", and in accordance with recognized industry practices to ensure that products comply with requirements and serve intended functions.

PART 3 – EXECUTION (NOT USED)

END OF SECTION

Attachment: Holly Hill LS_13 Rehabilitation_Bid Set Specifications_04.30.19 (2019-R-38 : Lift Station #13 Rehabilitation)

SECTION 26 05 33.13

CONDUIT FOR ELECTRICAL SYSTEMS

PART 1 – GENERAL

1.01 DESCRIPTION OF WORK

A. General. Provide metal conduit, tubing and fittings of types, grades, sizes, and weights (wall thicknesses) for each service indicated. Where types and grades are not indicated, provide proper selection determined by installer to fulfill wiring requirements, and comply with applicable portions of NEC for raceways.

1. Rigid Steel Conduit. FS WW-C-0581 and ANSI C80.1.

2. Rigid Metal Conduit Fittings. FS W-F-408.

3. Use Type 1 Fittings for rain-tight connections.

4. Use Type 1 Fittings for concrete tight connections.

5. Use Type 3 Fittings for other miscellaneous connections.

6. Electrical Metallic Tubing (EMT). FS WW-C-563 and ANSI C80.3.

NOTE: IN GENERAL, EMT RACEWAYS SHALL NOT BE USED ON THIS PROJECT

B. EMT Fittings. FS W-F-408.

1. Use Type 1 Fittings for rain-tight connections.

2. Use Type 2 Fittings for concrete tight connections.

3. Use Type 3 Fittings for other miscellaneous connections.

C. Flexible Metal Conduits. FW WW-C-566, of the following type:

1. Type 2. Zinc-coated steel.

2. Flexible Metal Conduit Fittings. FS W-F-406, Type 1, Class 1, and Style A.

3. Liquid-Tight Flexible Metal Conduit. Provide liquid-tight flexible metal conduit; construct of single strip, flexible, continuous, interlocked, and double-wrapped steel; galvanized inside and outside; coat with liquid-tight jacket of flexible polyvinyl chloride (PVC).

Attachment: Holly Hill LS_13 Rehabilitation_Bid Set Specifications_04.30.19 (2019-R-38 : Lift Station #13 Rehabilitation)

PART 2 – PRODUCTS (NOT USED)

PART 3 – EXECUTION (NOT USED)

END OF SECTION

Attachment: Holly Hill LS_13 Rehabilitation_Bid Set Specifications_04.30.19 (2019-R-38 : Lift Station #13 Rehabilitation)

SECTION 26 05 33.16

BOXES FOR ELECTRICAL SYSTEMS

PART 1 – GENERAL

1.01 DESCRIPTION OF WORK

A. Extent of electrical box and electrical fittings work is indicated by drawings and schedules.

B. Types of electrical boxes and fittings in this section include the following:

1. Outlet Boxes.

2. Junction Boxes.

3. Pull Boxes.

4. Conduit Bodies.

5. Bushings.

6. Knockout Closures.

PART 2 – QUALITY ASSURANCE

2.01 COMPLIANCE

A. Comply with NEC as applicable for construction and installation of electrical wiring boxes and fittings.

B. UL Compliance. Provide electrical boxes and fittings which have been UL listed and labeled.

C. ANSI/NEMA Standards Compliance. Comply with ASNI 134.1 (NEMA Standards PUB No. OS 1) as applicable to sheet-steel outlet boxes, device boxes, covers, and box supports.

2.02 FABRICATED MATERALS

A. Interior Outlet Boxes.

1. Provide galvanized flat rolled sheet steel interior outlet wiring boxes, of types, shapes, and sizes, including box depths, to suit each respective location and installation; construct with stamped knockouts in back and sides, and

Attachment: Holly Hill LS_13 Rehabilitation_Bid Set Specifications_04.30.19 (2019-R-38 : Lift Station #13 Rehabilitation)

with thread screw holes with corrosion-resistant screws for securing box covers and wiring devices.

2. Manufacturer. Subject to compliance with requirements, provide interior outlet boxes of one of the following:

   a. Adalet-PLM Div., Scott and Fetzer Co.
   b. Appleton Electric Company.
   c. Bell Electric/Square D Co.
   d. RACO, Inc.
   e. Steel City/Midland-Ross Corp.

B. Weatherproof Outlet Boxes.

1. Provide corrosion-resistant cast metal weatherproof outlet wiring boxes, of types, shapes, and sizes, including depth of boxes, with threaded conduit ends, cast-metal face plates and spring-tipped waterproof caps suitably configured for each application, including face plate gaskets and corrosion-resistant fasteners.

2. Manufacturer. Subject to compliance with requirements, provide weatherproof outlet boxes of one of the following:

   a. Bell Electric/Square D Co.
   b. Harvey Hubbel, Inc.
   c. O-Z/ Gedney Co.

C. Junction and Pull Boxes.

1. Provide galvanized code-gauge sheet junction and pull boxes, with screw-on covers; of types, shapes, and sizes, to suit each respective location and installation; with welded seams and equipped with stainless steel nuts, bolts, screws, and washers.

2. Manufacturer. Subject to compliance with requirements, provide junction and pull boxes of one of the following:

   a. Adelet-PLM Div., Scott Fetzer Co.
   b. Appleton Electric Co.
   c. Bell Electric/ Square D Co.
   d. Spring City Elect. Mfg. Co.

D. Conduit Bodies.

1. Provide galvanized cast-metal conduit bodies, of types, shapes, and sizes, to suit respective location, construct with thread-conduit-entrance ends, removable covers, and corrosion-resistant screws.

Attachment: Holly Hill LS_13 Rehabilitation_Bid Set Specifications_04.30.19 (2019-R-38 : Lift Station #13 Rehabilitation)

2. Manufacturer. Subject to compliance with requirements, provide conduit bodies of one of the following:

   a. Appleton Electric Co.
   b. Killark Electric Mfg. Co.
   c. O-Z/Gedney Co.

E. Bushings, Knockout Closures, and Locknuts.

1. Provide corrosion-resistant punched-steel box knockout closures, conduit locknuts and malleable iron conduit bushings, offset connectors, of types and sizes, to suit respective uses and installations.

PART 3 – EXECUTION

3.01 INSTALLATION OF ELECTRICAL BOXES AND FITTINGS

A. General.

1. Install electrical boxes and fittings where indicated, complying with manufacturer's written instruction, applicable requirements of NEC and NECA's "Standard of Installation", and in compliance with recognized industry practices to ensure that products fulfill requirements.

2. Coordinate installation of electrical boxes and fittings with wire/cable and raceway installation work.

3. Provide weatherproof outlets for interior and exterior locations exposed to weather and moisture.

4. Provide knockout closure to cap unused knockout holes where blanks have been removed.

5. Install boxes and conduit bodies in those locations to ensure ready accessibility of electrical wiring.

6. Avoid using round boxes where conduit must enter box through side of box, which would result in difficult and insecure connections when fastened with locknut or bushing on rounded surface.
7. Fasten boxes rigidly to substrates or structural to which attached, or solidly embedded electrical boxes in concrete or masonry.

8. Provide electrical connections for installed boxes.

END OF SECTION

Attachment: Holly Hill LS_13 Rehabilitation_Bid Set Specifications_04.30.19 (2019-R-38 : Lift Station #13 Rehabilitation)

SECTION 26 05 43

UNDERGROUND DUCTS AND RACEWAYS FOR ELECTRICAL SYSTEMS

PART 1 – GENERAL

1.01 DESCRIPTION OF WORK

A. Underground Duct Lines.

1. Description of Assembly

a. Underground duct lines where shown shall be of individual conduits encased in concrete. The conduit shall be of plastic, unless indicated or specified otherwise. The conduit used shall not be smaller than four inches (4") in diameter, inside, unless otherwise noted. The concrete encasement surrounding the duct bank shall be reinforced as shown and rectangular in cross-section, having a minimum concrete thickness of three inches (3"). Conduit shall be separated by a minimum concrete thickness of three inches (3").

b. The concrete work shall conform to Sections on "Concrete". The top of the concrete envelope shall be not less than 18 inches (18") below grade. Concrete shall be installed in a continuous pour to eliminate joints in the duct run. Duct lines shall have a continuous slope downward toward manholes and away from buildings with a pitch of not less than 3 inches (3") in 100 feet (100'). Changes in direction of runs exceeding a total of 10 degrees (10°) either vertical or horizontal, shall be accomplished by long sweep bends having a minimum radius of curvature of 25 feet (25'), except that manufactured bends may be made up of one or more curved or straightened sections or combinations thereof. Manufactured bends shall have a minimum radius of 36 inches (36"). Right angle bends shall be rigid steel black mastic coated.

c. Conduits shall terminate in end-bells where duct lines enter manholes. Separators shall be of precast concrete, high impact polystyrene, steel, or any combination of these. The joints of the conduits shall be staggered by rows so as to provide a duct line having the maximum strength. During construction, partially complete duct lines shall be protected from the entrance of debris, such as mud, sand, and dirt by means of suitable conduit plugs. As the duct line is completed, a testing mandrel not less than 13 inches (13") long with a diameter 1/4 inch (1/4") less than the size of the stiff bristles shall be drawn through until the conduit is clear of all particles of earth, sand, or gravel; conduit plug shall then be immediately installed.

Attachment: Holly Hill LS_13 Rehabilitation_Bid Set Specifications_04.30.19 (2019-R-38 : Lift Station #13 Rehabilitation)

d. Plastic conduit, fittings and joints shall not have been stored in the sun or weather. In any excessively heated space, or unevenly supported during storage. Use and installation shall be in accordance with NEC requirements for the installation of non-metallic rigid conduit. Plastic conduit shall be protected against the direct rays of the sun prior to installation. Conduit shall be Carlon Type EB, Queen City Plastics, or equal. Conduit shall be U.L. listed and conform to NEMA Standard TC6-1972.

e. Trenches for duct banks shall be completely dry before setting conduits or pouring concrete. Well pointing as required will be provided if necessary to keep trench dry.

f. Wires and cables in manhole shall be placed on cable racks. Manhole shall be cleaned of all loose materials, dirt, and debris immediately after completion of new work and shall be in a clean condition with insulators. Racks shall be McGraw Edison NOB-LOC type, Chance, or equal.

g. Backfilling shall be in layers not more than 8 inches (8") deep, and shall be thoroughly tamped. The first layer shall be earth or sand, free from particles that would be retained on a 1/4" inch (1/4") sieve. The succeeding layers shall be excavated material having stones no larger than would pass through a 4-inch (4") ring. The backfill shall be level with adjacent surface, except that in sodded or paved areas, a space equal to the thickness of the sod or paving shall be left.

h. The surface disturbed during the installation of duct shall be restored to its original elevation and condition if not refinished in connection with site work.

i. All unused conduit openings shall be plugged or capped with a suitable device designed for the purpose; caulking compound shall not be used for plugging conduit openings.

j. One (1) No. 4 bare stranded copper counterpoise shall be run above all duct banks and shall be run into all manholes and handholes and grounded. Counterpoise shall run to building and be grounded at each building service ground.

B. Raceways.

1. Extent of raceways is indicated by drawings and schedules. Types of raceways in this section include the following:

a. Electrical Metallic Tubing.
b. Flexible Metal Conduit.
c. Intermediate Metal Conduit.
d. Liquid-Tight Flexible Metal Conduit.
e. Rigid Metal Conduit.
f. Rigid Nonmetallic Conduit.
g. Surface Metal Raceways.

Attachment: Holly Hill LS_13 Rehabilitation_Bid Set Specifications_04.30.19 (2019-R-38 : Lift Station #13 Rehabilitation)

2. NEMA Compliance. Comply with applicable requirements to NEMA standards pertaining to raceways.

3. UL Compliance and Labeling. Comply with provisions of UL safety standards pertaining to electrical raceway systems; and provide products and components which have been UL listed and labeled.

4. NEC Compliance. Comply with requirements as applicable to construction and installation of raceway systems.

NOTE: IN GENERAL, EMT RACEWAYS SHALL NOT BE USED ON THIS PROJECT

1.02 WIREWAYS

A. General. Provide electrical raceways of types, grades, sizes, weights (wall thicknesses), number of channels, for each type service indicated. Provide complete assembly of raceway including, but not necessarily limited to, couplings, offsets, elbows, expansion joints, adapters, hold-down straps, end caps and other components and accessories as needed for complete system. Where types and grades are not indicated, provide proper selection as determined by installer to fulfill wiring requirements, and comply with applicable provisions of NEC for electrical raceways.

1.03 SUBMITTALS

A. Submit shop drawings or cut sheets on:

1. Conduit.

2. Fittings.

3. Separators.

4. PVC solvent.

PART 2 – PRODUCTS

2.01 INSTALLATION OF ELECTRICAL RACEWAYS

A. Install electrical raceways where indicated; in accordance with manufacturer's written instructions, applicable requirements of NEC and NECA "Standard of Installation", and comply with recognized industry practices.

B. Coordinate with other work, including metal can concrete deck work, as necessary to interface installation of electrical raceways and components with other work.

Attachment: Holly Hill LS_13 Rehabilitation_Bid Set Specifications_04.30.19 (2019-R-38 : Lift Station #13 Rehabilitation)

C. Coat under floor metal raceways with bitumastic type protective coating prior to placing concrete.

D. Level and square raceway runs, and install at proper elevations/heights.

E. Complete installation of electrical raceways before starting installation of cables/wires within raceways.

F. Install PVC-coated conduit and fittings in highly corrosive atmospheres, and elsewhere as indicated.

G. Install flexible conduit for motor connections and for other electrical equipment connections where subject to movement and vibration.

H. Install liquid-tight flexible conduit for connection of motors and for other electrical equipment where subject to movement and vibration and also where subject to one or more of the following conditions:

1. Exterior location, moist of humid atmosphere where condensate can be expected to accumulate, corrosive atmosphere, subjected to water spray, subjected to dripping oil, grease, or water.

I. Wherever possible, install horizontal raceway runs above water and steam piping.

PART 3 – EXECUTION (NOT USED)

END OF SECTION

Attachment: Holly Hill LS_13 Rehabilitation_Bid Set Specifications_04.30.19 (2019-R-38 : Lift Station #13 Rehabilitation)

SECTION 26 05 53

ELECTRICAL IDENTIFICATION

PART 1 – GENERAL

1.01 DESCRIPTION OF WORK

A. Extent of electrical identification work is indicated by drawings and schedules.

B. Types of electrical identification work specified in this section include the following:

1. Electrical Power, Control and Communication Conductors, and Danger Signs.

2. Refer to appropriate section "Identification System", for equipment and system nameplates, and performance data, not work of this section.

PART 2 – PRODUCTS

2.01 Acceptable Manufacturers.

A. Subject to compliance with requirements, provide electrical identification products of one of the following (for each type of marker):

1. W.H. Brady Co.

2. Ideal Industries, Inc.

2.02 Cable/Conductor Identification Bands.

A. General. Provide manufacturer's standard vinyl-cloth, self-adhesive cable/conductor markers of wrap-around type, either pre-numbers plastic coated/type, or write-on type with clear plastic self-adhesive cover flap; numbered to show circuit identification.

PART 3 – EXECUTION

3.01 EQUIPMENT/SYSTEM IDENTIFICATION

A. General.

1. Install engraved plastic-laminate sign on each major unit of electrical equipment in building; including central or master unit of each electrical system including communication/control/signal systems, unless unit is

Attachment: Holly Hill LS_13 Rehabilitation_Bid Set Specifications_04.30.19 (2019-R-38 : Lift Station #13 Rehabilitation)

specified, with its own identification. Provide single line text, one-half inch (1/2") high lettering on one and a half foot (1-1/2') high sign, and white lettering in black field. Provide text matching terminology and numbering of the contract documents and shop drawings. Provide signs for each unit of the following categories or electrical work.

2. Panelboards, electrical cabinets, and enclosures. Access panel/doors to electrical facilities; major electrical switchgear; motor control centers and transformers.

3. Install signs at locations indicated or, where not otherwise indicated, at location for best convenience of viewing without interference with operation and maintenance of equipment. Secure to substrate with fasteners, except use adhesive where fasteners should not or cannot penetrate substrate.

END OF SECTION

Attachment: Holly Hill LS_13 Rehabilitation_Bid Set Specifications_04.30.19 (2019-R-38 : Lift Station #13 Rehabilitation)

SECTION 26 27 26

WIRING DEVICES

PART 1 – GENERAL

1.01 DESCRIPTION OF WORK

A. The extent of wiring device work is indicated by drawings and schedules. Wiring devices are defined as single discrete units of electrical distribution systems which are intended to carry but not utilize electric energy.

B. Types of electrical wiring devices in this section include the following:

1. Receptacles.

2. Switch.

3. Wall Plates.

4. Plugs.

5. Plug Connectors.

PART 2 – QUALITY ASSURANCE

2.01 COMPLIANCE.

A. Comply with NEC as applicable to construction and installation of electrical wiring devices.

B. UL Compliance and Labeling. Provide electrical wiring devices which have been UL listed and labeled.

C. NEMA Compliance. Comply with NEMA standards for general and specific purpose wiring devices.

D. Submittals.

1. Product Data. Submit manufacturer's data on electrical wiring devices.

Attachment: Holly Hill LS_13 Rehabilitation_Bid Set Specifications_04.30.19 (2019-R-38 : Lift Station #13 Rehabilitation)

PART 3 – PRODUCTS

3.01 MANUFACTURER

A. Subject to compliance with requirements, provide products of one of the following (for each type of wiring device):

1. Harvey Hubbell, Inc.

2. Levington Mfg. Co.

B. Fabricated Wiring Devices

1. General. Provide factory-fabricated wiring devices, in types colors, and electrical rating, for applications indicated, and complies with NEMA Standards Pub. No. WD1. Where types and grades are not indicated, provide proper selection as determined by installer to fulfill wiring requirements, and complying with NEC and NEMA standards for wiring devices. Provide ivory color devices and wall plates except as otherwise selected; color selection to be verified by CONTRACTOR with ENGINEER.

3.02 RECEPTACLES

A. Heavy-Duty Duplex. Provide heavy-duty duplex receptacles, two (2)-pole, three (3)-wire grounding, 20-amperes, 125-volts, with metal plaster ears, back wiring, NEMA configuration 5-20R, unless otherwise indicated.

B. Ground Fault Interrupter. Provide general-duty duplex receptacles, ground-fault circuit interrupters; feed-thru type, capable of protecting connected downstream receptacles on single circuit, grounding type UL-rated Class A, Group 1, 20-amperes rating, 120-volts, 60 Hz; with solid-state ground-fault sensing and signaling; with five (5) milliamperes ground-fault trip level; equip with 20-ampere plug configuration, NEMA 5-20R.

3.03 PLUGS AND CONNECTORS

A. Plugs. Provide 15-amperes, 125-volts, 3-wire grounding, armored cap plugs, parallel blades with cord clamp, and four-tenths inch (0.4") cord hole; match NEMA configuration with power sources.

B. Connectors. Provide 15-amperes, 125-volts, bakelite-body armored connectors three (3)-wire grounding, parallel blades, double wipe contact, with cord clamp, and four-tenths inch (0.4") cord hole, match NEMA configuration to mating plugs.

Attachment: Holly Hill LS_13 Rehabilitation_Bid Set Specifications_04.30.19 (2019-R-38 : Lift Station #13 Rehabilitation)

3.04 SWITCHES

A. Snap. Provide general-duty flush single-pole toggle switches, 20-ampere, 277-volts AC, with mounting yoke insulated from mechanism, equip with plaster ears, switch handle, and side wired screw terminals.

PART 4 – WIRING DEVICES

4.01 INSTALLATION

A. Install wiring devices as indicated, in compliance with manufacturer's written instructions, applicable requirements of NEC and NECA's "Standard of Installation", and in accordance with recognized industry practices to fulfill project requirements.

B. Coordinate with other work; include painting, electrical box, and wiring work, necessary to interface installation of wiring devices with other work.

C. Install wiring devices only in electrical boxes which are clean, free from excess building materials, dirt, and debris.

D. Install galvanized steel wall plates in unfinished spaces.

E. Delay installation of wiring devices until wiring work is completed.

F. Delay installation of wall plates until after painting work is completed.

4.02 GROUNDING.

A. Provide electrically continuous, tight grounding connections for wiring devices, unless otherwise indicated.

4.03 TESTING.

A. Prior to energizing circuitry, test wiring devices for electrical continuity and proper polarity connections. After energizing circuitry, test wiring devices to demonstrate compliance with requirements.

END OF SECTION

Attachment: Holly Hill LS_13 Rehabilitation_Bid Set Specifications_04.30.19 (2019-R-38 : Lift Station #13 Rehabilitation)

SECTION 31 22 00

SITE GRADING

PART 1 – GENERAL

1.01 WORK INCLUDES

A. Excavation and embankment necessary for grading the site shall be considered to include that required for roads, walks, culvert installations, and drainage ditches and channels.

PART 2 – PRODUCTS (NOT USED)

PART 3 – EXECUTION

3.01 PREPARATION

A. After the removal of topsoil, the then existing surface is to be excavated or filled to the elevations and slopes indicated on the Drawings, or as directed by the ENGINEER. Additional fill, if required, and is not available elsewhere, shall be excavated from borrow areas selected by the CONTRACTOR, but subject to the approval of the ENGINEER. Unless otherwise provided, all borrow pits shall be located entirely outside the limits of the site.

B. On areas where roadway pavement is to be placed, the subgrade therefore shall be no more than 0.10 foot (0.10') above or below the established grade; in other areas, the finished grade shall be not more than 0.15 foot (0.15') above or below the established grade.

C. Where rock is encountered at road subgrade or finished grade in areas other than roads, it shall be removed for a depth of six inches (6") below such subgrade or finished grade elevation.

D. Subgrades and shoulders for the access and service roads shall be constructed to the lines and grades indicated, and in conformance with the applicable requirements of the "Standard Specifications" for the Florida State Department of Transportation.

3.02 EMBANKMENT

A. On hillsides in which the existing slope is steeper than four (4) to one (1), the ENGINEER may require the surface to be plowed to provide binding of the embankment with the original ground. When, in the opinion of the ENGINEER, existing slopes are excessive, the ENGINEER may require the original ground to be cut into the steps or berms.

Attachment: Holly Hill LS_13 Rehabilitation_Bid Set Specifications_04.30.19 (2019-R-38 : Lift Station #13 Rehabilitation)

B. All materials removed from classes of excavation, which are determined as suitable by the ENGINEER, shall be used in the formation of embankments. Excavated material which is not required for embankments shall be disposed of by the CONTRACTOR, at his responsibility and expense, outside the limits of the site, unless the ENGINEER gives notice of some point of disposal within the site. No material shall be disposed of in any flood channel area.

C. Earth or other friable materials shall be placed in successive horizontal layers of loose material not more than nine inches (9") in depth, spread uniformly by use of graders or other approved devices, and rolled until thoroughly compacted with an approved three (3) wheel power roller weighing not less than 10 tons. The ENGINEER may permit the CONTRACTOR to use approved sheep-foot tamping rollers. Embankments at points inaccessible to the roller shall be made in horizontal layers of loose material not exceeding six inches (6") in depth and thoroughly compacted by mechanical tampers.

D. Where rock only is available, it shall be placed in loose layers not exceeding two feet (2') in depth and rolled as provided above. Rock fills shall only be considered as such where the earth or other finer materials is uniformly distributed and is considerably less than sufficient to fill the voids and interstices; otherwise it shall be considered and placed as earth fill. The top layer of rock fills shall not exceed eight inches (8") in depth, and the interstices shall be thoroughly filled with small spall, shale, gravel, or other similar approved material and thoroughly compacted. This top layer of rock shall be kept at least eight inches (8") below the elevation of subgrade for payments, and finished grade elsewhere, with the balance of the fill formed by topsoil or other approved material, as required.

E. No roots, leaves, grass, or any form of vegetation shall be placed or allowed to remain in filled or graded areas.

F. The CONTRACTOR shall be responsible for the stability of all embankments and shall replace all sections which, in the opinion of the ENGINEER, have been damaged or displaced due to carelessness or neglect on the part of the CONTRACTOR due to natural causes, such as storms.

G. During grading operations, cuts and fills shall be kept shaped and drained at all times.

END OF SECTION

Attachment: Holly Hill LS_13 Rehabilitation_Bid Set Specifications_04.30.19 (2019-R-38 : Lift Station #13 Rehabilitation)

SECTION 31 23 00

EXCAVATION, BACKFILL, AND EMBANKMENT

PART 1 – GENERAL

1.01 SCOPE

A. The work covered by this section and required by this Contract includes the completion of all excavation, backfilling and embankment to the lines and grades indicated by the drawings, as further specified below, and necessary to the following operations:

1. Stripping, storing and replacing topsoil;

2. Excavation and backfill for pipe trenches;

3. Excavation and embankment for road, grading and drainage of the site;

4. Excavation and backfill for buildings and structures; and

5. Borrow excavation.

1.02 CHARACTER OF MATERIAL.

A. The CONTRACTOR must satisfy himself regarding the character and amount of loam, clay, sand, quicksand, muck, gravel, rock, water, and all other material to be encountered in the work to be performed.

1.03 DESCRIPTION

A. The CONTRACTOR shall excavate, protect, and backfill all foundations, trenches, tunnels, and other excavations that may be necessary for completing the work to be done under this Contract. All excavation shall be in open cuts, except where and to such extent as the ENGINEER may authorize or direct that the same be done in tunnel, or where such is specified in the Special Requirements or Contract drawings. Trenches may, in general, be excavated and backfilled either by machinery, or by hand as the CONTRACTOR may elect; provided, however, that the ENGINEER shall be empowered, wherever he shall decide that such necessity exists, to direct that hand excavation by employed; and, provided, further that backfilling by hand shall be done to the extent hereinafter specified. The CONTRACTOR shall have not claim for extra compensation due to the fact that hand, instead of machine, excavation may be necessary from any cause whatever.

Attachment: Holly Hill LS_13 Rehabilitation_Bid Set Specifications_04.30.19 (2019-R-38 : Lift Station #13 Rehabilitation)

B. The CONTRACTOR shall perform all excavation of every description and of whatever substances encountered, to the lines and grades or depths indicated by the drawings, as specified herein, or as directed by the ENGINEER. Embankments shall be prepared in accordance with the Specifications, and as necessary to bring the ground surface to the subgrade elevation for roads and to finished grade elevations for other areas as shown on the drawings, or directed by the ENGINEER. All excavated material not required for backfill or embankment shall be removed and wasted or otherwise disposed of as directed or specified.

C. The term "subgrade" as used herein shall have the meaning given below:

1. The bed of a trench prepared as specified to receive pipes or other conduits;

2. The area upon which the lower surface of roadway paving, walks, gutters, or curb rests;

3. The surface of excavation or embankment areas prepared to receive topsoil; and

4. The areas upon which rest the planned bottom of footings, foundations, or slabs.

PART 2 – MATERIALS

2.01 TOPSOIL

A. Stripping. The area from which topsoil is to be stripped and the locations where it is to be stored shall be as shown on the drawings or as specified below. The topsoil shall be stripped to a depth of not less than six inches (6"). On all areas where any type of grading is to be performed, including the areas within the lines of buildings and structures, the topsoil shall be carefully removed and spread either on areas already graded or prepared for topsoil, or in stockpiles conveniently located to the areas which are later to receive application of topsoil.

B. Spreading. On areas intended to receive topsoil, the compacted subgrade shall be scarified to a depth of two inches (2") for bonding topsoil with subsoil. The topsoil shall then be evenly spread, compacted, and graded to the finished elevations shown on the drawings or as specified by the ENGINEER. Compaction shall be effected by a single pass of an approved roller.

2.02 REMOVAL AND STORAGE OF MATERIAL

A. In locations where the working space is limited, the material excavated from the first one hundred feet (100') of any trench, or from such additional length as may be required, shall upon order of the ENGINEER, be removed at the CONTRACTOR's own cost and expense, as soon as excavated. The materials subsequently excavated shall be used to refill the trench. In no case, will the CONTRACTOR be allowed to

Attachment: Holly Hill LS_13 Rehabilitation_Bid Set Specifications_04.30.19 (2019-R-38 : Lift Station #13 Rehabilitation)

cast excavated material beyond curb of right-of-way lines, or on sidewalks or lawns, and the failure or refusal of the CONTRACTOR to comply with this requirement shall be sufficient cause for the ENGINEER to stop all work under the Contract.

B. In case more material is excavated from any trench than can be backfilled over the completed sewer or can be stored within the limits of the right-of-way, leaving space for the traffic and drainage as herein provided, the excess material shall be removed to some convenient place, provided by the CONTRACTOR. The CONTRACTOR shall at his own cost and expense bring back as much of the material so removed, as may be required to properly backfill the trench, if of the proper kind; or, if so directed by the ENGINEER, the CONTRACTOR shall, at his own cost and expense, furnish such other suitable material as may be necessary.

C. When it is necessary to haul soft or wet material over the streets, the CONTRACTOR shall provide suitable tight vehicles, or a pattern approved by the ENGINEER for this purpose.

2.03 SHEETING, BRACING, AND SHORING

A. The CONTRACTOR shall furnish the material for, and do all timber shoring, bracing, and sheeting necessary to perform and protect the excavation, and as required by the ENGINEER to protect the work, other structures, the public, and the CONTRACTOR's employees. If trench protection is necessary, per OSHA requirements, the CONTRACTOR shall account for the anticipated expense in the appropriate bid item, or in the unit cost for pipe installed, or a combination of both. If the ENGINEER deems that sheeting, bracing, or shoring is necessary, it shall be supplied by the CONTRACTOR at no additional expense to the OWNER. Such sheeting, etc. may be removed as the work progresses, but where, in the opinion of the ENGINEER, damage may result through removal; it shall be left in place with payment therefore made as hereinafter provided. The right of the ENGINEER to order sheeting, etc. left in place shall not render the issuance of such order obligatory on the part of the ENGINEER.

B. All sheeting, etc. shall be arranged so that it may be withdrawn, as the trenches are backfilled, without injury to the pipe and its appurtenances, and without injury to or settlement of adjacent structures and pavements. All voids caused by withdrawal shall be immediately filled with sand or other satisfactory material and compacted by ramming or other method satisfactory to the ENGINEER.

C. No timber sheeting, bracing or shoring shall be left within 18 inches (18") of any natural ground surfaces or within 12 inches (12") of the subgrade of any rigid or flexible type pavement, or railroad roadbed. In any trench shoring system, no vertical member shall remain directly over the pipe and no horizontal member shall remain within 12 inches (12") of any pipe. After backfilling is started, no sheeting shall extend below the horizontal diameter of the pipe without the ENGINEER's approval. Sheeting left in place shall be cut off at such point as the ENGINEER may order, and the portions cut off shall be removed from the work.

Attachment: Holly Hill LS_13 Rehabilitation_Bid Set Specifications_04.30.19 (2019-R-38 : Lift Station #13 Rehabilitation)

D. If the ENGINEER determines that the material furnished is not of proper size or quality, or not properly placed, the CONTRACTOR shall furnish and place other and satisfactory material in an acceptable manner, and shall not be entitled to additional compensation for such corrective work.

PART 3 – EXECUTION

3.01 ORDER OF WORK

A. The CONTRACTOR shall submit a progress schedule as specified in Article 2.40 and shall carry on his work in strict accordance therewith. Deviations from the progress schedule may be made only with the approval of the ENGINEER.

B. Manholes shall be constructed either at the same time as the main sewer or immediately after its completion.

3.02 SEWER LINES AND GRADES.

Sewer lines and grades shall be laid out and maintained during construction in the following manner.

A. Prior to the commencement of trench excavation, the CONTRACTOR shall prepare and submit to the ENGINEER for approval, detailed cut sheets provided by the CONTRACTOR's surveyor. The surveyor shall be registered in the State of Florida. Cut sheet shall show; the beginning and ending of manholes; the distance between manholes; the grade, size and type of line, the depth of cut; etc. The form of cut sheets shall be satisfactory to the ENGINEER. All expense for the preparation of cut sheets shall be borne by the CONTRACTOR and be included in the unit price per foot of pipe. Cut sheets must be approved by the ENGINEER in writing before pipe laying operations may be permitted. It shall be the responsibility of the CONTRACTOR to prepare cut sheets far enough in advance of his anticipated trenching schedule so that avoidable delay in the work will not occur.

B. Before beginning the excavation for any run of main sewer, the CONTRACTOR's forces, under the direction of the ENGINEER, shall:

1. Set control points for line and grade as given on the Drawings or as otherwise determined by the ENGINEER. In unpaved or unsurfaced areas, these points shall be placed on the top of stakes securely driven into the ground. In paved areas, there may be spikes driven into the paving or crosses cut into the paving, and in either case, enclosed in a painted circle. Stakes or points shall be sufficiently offset from the centerline so as to be undisturbed during the excavation and pipe laying operations. The offset shall be on the side of the centerline opposite to that on which excavation will be thrown.

Attachment: Holly Hill LS_13 Rehabilitation_Bid Set Specifications_04.30.19 (2019-R-38 : Lift Station #13 Rehabilitation)

2. As the rough excavation is completed, the CONTRACTOR's surveyor shall place grade or batter boards of finished, straight lumber across the trench opposite each stake or point. The grade boards shall be securely supported so as not to be subject to accidental displacement. The top of each board shall be leveled and set at the same distance above the sewer invert. A nail shall then be driven into the top of each board on the centerline of the sewer and each nail connected by a string line pulled taut.

3. The preparation of the final subgrade and the pipe laying shall then proceed in the manner specified herein, beginning at the manhole having the lower invert and working upgrade and using the string line as control for maintaining sewer grade and horizontal alignment. A straight wooden pole suitably marked and with a right-angled offset at the bottom to project past the bell of the pipe and rest upon the pipe invert, shall be used to check the vertical distance from string line to invert.

C. The use of laser beams shall be acceptable as a method of controlling pipe alignment and grade.

3.03 WIDTH AND DEPTH OF TRENCHES

A. From the subgrade elevation to an elevation at least 12 inches (12") above the top of the outside barrel of the pipe, the banks of trenches in all cases shall be excavated to vertical lines, and the trenches shall be not less than 12 inches (12") nor more than 16 inches (16") wider nor more than eight inches (8") in width is provided on each side of the barrel of the pipe. If sheeting is required, the foregoing dimensions shall be applicable to the inside faces of the sheeting.

B. From a point twelve inches (12") above the top of the outside barrel of the pipe to the surface, the banks of trenches in all streets, roads, or highways, paved or unpaved, shall be kept as nearly vertical as possible, and in no case, shall the width of trench at the top exceed the outside diameter of the pipe plus 40 inches (40"). If the specified maximum width of trench cannot otherwise be maintained, the CONTRACTOR shall install temporary sheeting at his own cost and expense. Where sewers are to be constructed on rights-of-way or easements in open country, the specified maximum width of trench at the top may be exceeded only if the construction is kept entirely within the limits of the easements or rights-of-way and can be carried on without damage to adjoining property.

C. Except at locations where excavation of rock or unsuitable material is required, care shall be taken not to excavate below the depths specified, when rock is encountered, it shall be removed to a depth six inches (6") below the outside bottom of the pipe at the barrel. When the material encountered at subgrade is unstable, it shall be removed from under the pipe and on each side of the pipe for a distance of one (1) diameter of the pipe. Such rock or unsuitable material excavation below subgrade shall be backfilled with moist clay, sand, bankrun gravel, or other suitable material compacted to the satisfaction of the ENGINEER, and the bed thus formed shaped as required

Attachment: Holly Hill LS_13 Rehabilitation_Bid Set Specifications_04.30.19 (2019-R-38 : Lift Station #13 Rehabilitation)

above. In rock excavation, if trenches are shattered by blasting below the lines of excavation specified herein, the trench shall be refilled to subgrade with sand, well tamped earth, or concrete, if required by the ENGINEER, at the CONTRACTOR's expense. If earth trenches are excavated beyond the specified depths, they shall be backfilled to the proper grade with suitable, thoroughly tamped material at the expense of the CONTRACTOR.

3.04 PREPARATION OF FOUNDATION

A. In earth trenches, the bottom thereof shall be carefully rounded to fit the lower ninety degrees (90°) of the circumference of the pipe, i.e., so that one-fourth (1/4) of the external circumference of the pipe will rest firmly on the undisturbed soil. Bell-holes shall be excavated to ensure that the barrel of the pipe will rest for its entire length upon the trench bottom.

B. Bell-holes shall be properly cut to provide free support of the pipe barrel and shall be directed by the ENGINEER. All irregularities and cavities, either in earth or rock excavation, in the bottom of trenches or tunnels, shall be filled up to a level which will support ninety degrees (90°) of the lower pipe circumference with selected material free from large gravel, rocks, and stones, firmly compacted before pipe lines are laid therein.

C. Where, in the opinion of the ENGINEER, the ground does not afford a sufficiently firm foundation, the CONTRACTOR shall construct a timber foundation, or shall excavate the trench to such increased depth as may be directed, and then shall bring up the bottom of the trench to the required level and form with such material and in such manner as the ENGINEER may direct.

3.05 CONCRETE CRADLE AND ENCASEMENT

A. The profiles generally indicate the approximate vertical limits where concrete cradle and encasement are necessary to support the anticipated loads on completed sewers for the widths of trench as required for each size and class of pipe, based on the crushing strength of the pipe.

B. The CONTRACTOR is warned that if the trench widths or clearances between pipe and trench walls or face of sheeting, as specified above, are exceeded, he will be required to furnish in all locations at his own expense either concrete cradle or encasement as directed by the ENGINEER.

C. It is anticipated that subsurface conditions may require a cradle for a portion of the project to provide an adequate foundation, even though the ultimate anticipated load on the pipe is less than the minimum crushing strength for sand bearing. The CONTRACTOR shall place the cradle or encasement at the location, and of the materials, as directed and required by the ENGINEER. The CONTRACTOR will not be paid for any cradle beyond the required widths of trench.

Attachment: Holly Hill LS_13 Rehabilitation_Bid Set Specifications_04.30.19 (2019-R-38 : Lift Station #13 Rehabilitation)

D. All excavation made beyond the required limits shall be at the CONTRACTOR's expense.

3.06 LENGTH OF OPEN TRENCH

A. The ENGINEER shall have the right to limit the amount of trench opened in advance of pipe laying and the amount of pipe laid in advance of backfilling, but in no case, except when leakage tests are required by the ENGINEER, shall these amounts exceed three hundred feet (300') and one hundred feet (100'), respectively. Trench excavation shall be fully completed, except for the shaping of the bottom of the trench, at least 20 feet (20') in advance of the pipe placement and shall be kept free from obstructions, except that at the close of work at night, or at the discontinuance of work, the pipe laying may be completed to within five feet (5') of the end of the open trench.

B. The ENGINEER shall be empowered, at any time, to require the refilling of open trenches over completed pipe lines, if, in his judgment, such action is necessary, and the CONTRACTOR shall thereby have no claim for extra compensation even though to accomplish said refilling, he is compelled temporarily to stop excavation or other work at any place.

C. If the work is stopped on any trench, for any reason except by order of the ENGINEER, and the excavation is left open for an unreasonable length of time (in the opinion of the ENGINEER) in advance of construction, the CONTRACTOR shall, if so directed, refill such trench at his own cost and shall not again open said trench until he is ready to complete the structure therein.

3.07 ACCOMMODATION OF TRAFFIC

A. Streets shall not be unnecessarily obstructed and, unless the ENGINEER, in writing, shall authorize the complete closing of the street, the CONTRACTOR shall take such measures at his own expense as may be necessary to keep the street or road open and safe for traffic.

B. The CONTRACTOR shall construct and maintain without extra compensation such adequate and proper bridges over excavations as may be necessary or as directed for the safe accommodation of pedestrians or vehicles. The CONTRACTOR shall furnish and erect without cost to the OWNER substantial barricades at crossings of trenches, or along the trench, to protect the traveling public.

C. The CONTRACTOR shall not obstruct fire hydrants.

D. The roadway on one side of the line of work shall be kept open at all times.

E. The streets, crosswalks and sidewalks shall be kept clean, clear, and free for the passage of vehicles or pedestrians, unless otherwise authorized in writing by the ENGINEER. A straight and continuous passageway on sidewalks and over

Attachment: Holly Hill LS_13 Rehabilitation_Bid Set Specifications_04.30.19 (2019-R-38 : Lift Station #13 Rehabilitation)

crosswalks, at least three feet (3') in width, shall be preserved free from all obstruction.

F. Where deemed necessary, such additional passageway as may be directed shall be maintained free from obstructions.

G. In narrow or congested streets or alleys, when so directed, the CONTRACTOR shall complete his work up to a point designated by the ENGINEER before opening the work ahead, in order to give access to garages and other places. The CONTRACTOR shall in all cases so arrange his work as to cause the least inconvenience to property owners consistent with the proper precaution of the work as determined by the ENGINEER.

3.08 ACCOMMODATION OF DRAINAGE

A. Gutters, sewers, drains and ditches shall be kept open at all times for surface drainage. No damming or ponding of water in gutters or other waterways will be permitted, except where stream crossings are necessary and then only to an extent which the ENGINEER shall consider necessary. The CONTRACTOR will be responsible for all clean-up to existing utilities caused by their activities.

B. The CONTRACTOR shall not direct any flow of water across or over pavements except through approved pipes or properly constructed troughs and he shall, when so required at his own expense and cost, provide pipes or troughs of such sizes and lengths as may be required and place the same as directed.

C. The grading in the vicinity of sewer trenches shall be controlled so that the ground surface is properly pitched to prevent water running into trenches.

3.09 PUMPING

A. The CONTRACTOR shall keep all excavations free from water, at his own expense, while structural work is in progress, and to such extent as may be necessary while excavation work along is being carried on.

B. The CONTRACTOR shall build all dams and other devices necessary for this purpose, including lowering the water table below trench bottom by well points and pumping, and provide and operate pumps of sufficient capacity for dewatering the excavations.

C. He shall provide for the disposal of the water removed from excavation in such manner as shall not cause injury to the public health, to public or private property, to the work of other contractors, to any portion of the work completed or in progress, or produce any impediment to the use of the highways, roads, lanes, and streets by the public.

Attachment: Holly Hill LS_13 Rehabilitation_Bid Set Specifications_04.30.19 (2019-R-38 : Lift Station #13 Rehabilitation)

D. Any dewatering required shall be performed at the CONTRACTOR's expense. Payment for dewatering shall be included in the CONTRACTOR's bid prices for pipe or other structures requiring dewatering for installation. If holes made for installation of well points are installed in a roadway, shoulder, or under a structure, these holes shall be filled with lean grout prior to backfill and compaction. Any permits needed for dewatering shall be obtained and paid for by the CONTRACTOR.

3.10 EMBANKMENT

A. Where embankment is necessary to support the foundations of the pipe or structure, it shall be made to the height, width and slopes shown on the drawings, or as directed. The entire embankment, or such portion thereof as may be deemed necessary by the ENGINEER, shall be made prior to the construction of the sewer, structure, or the foundation thereof, at such time and in such order as the ENGINEER may direct; and the embankment, sewer, or structure, and appurtenances, which may be laid thereon or therein, shall be maintained by the CONTRACTOR, at his own cost and expense, until the completion of the period of one (1) year from and after the date of the Certificate of Completion and Acceptance.

B. After carefully grubbing and clearing the ground, removing all loose rock and stone, and all muck and improper material, to such a depth as the ENGINEER may determine, the embankment shall be built up of good loam, gravel or sand, or other selected and approved material, free from all stone above four inches (4") diameter, and not containing in any place a proportion of stones exceeding one (1) part stone to three (3) parts earth.

C. In cast material, which is unsatisfactory for the foundation of any embankment is encountered, said material shall be removed to such depth, and for such length and width as may be directed by the ENGINEER. Payment for the removal of material unfit for the foundation of an embankment will be made at the price bid or stipulated per cubic yard for excavation below subgrade.

D. The material for embankment shall be deposited in layers of not more than nine inches (9") in thickness; each layer shall be separately compacted by heavy, grooved iron rollers, or where such rollers cannot be used, by heavy paver's rammers. The embankment shall be watered during rolling, if so required. No breaks or irregularities in the distribution of the material or the formation of the layers will be allowed. The whole embankment shall be carried up evenly to the height given by the ENGINEER in such a manner as to make a compact and solid foundation. When pipe is to be laid in a fill, the embankment shall be brought to a height of at least one foot (1') above the proposed top of the pipe before the trench is excavated. The embankment shall then be excavated to the proper form and grade, and the sewer placed thereon; after which the embankment shall be carried up to a height of not less than three feet (3') above the top of the sewer, the material being placed and rolled or rammed in layers as above described.

Attachment: Holly Hill LS_13 Rehabilitation_Bid Set Specifications_04.30.19 (2019-R-38 : Lift Station #13 Rehabilitation)

3.11 BACKFILLING TRENCHES

A. It is the intent of the following requirements for the backfilling of trenches to specify materials and methods which will:

1. Result in thorough compaction of the backfilled material without the displacement of the grade or alignment of the sewer line and its appurtenances, and

2. Eliminate settlement of the backfilled material.

B. If displacement of the sewer or settlement of the backfilled material does occur, it will be considered as conclusive evidence of improper workmanship or the inclusion of unsuitable materials or both, and it shall be the CONTRACTOR's responsibility, at his own expense, to remove and recompact the settled material and regrade and realign the sewer. During the course of the backfilling operation, the ENGINEER may, at any location of depth of trench, make tests to determine whether the CONTRACTOR's compaction operations are sufficient to meet the requirements specified below.

C. The procedure of backfilling shall be as follows:

1. After the structure, pipe, or conduit and its appurtenances have been installed or constructed, the excavation, to a height of at least two feet (2') above the top of pipe or conduit, shall be refilled with clean earth deposited in four inch (4") layers and solidly rammed down and tamped around the pipe, or conduit and under it, with mechanical tampers and proper tools made for this purpose. The operation shall be done in such manner as not to disturb the structure. The area around the pipe shall be hand-tamped.

2. The earth, to the height specified above, shall be carefully thrown in with hand shovels; under no condition shall any other means than hand shoveling, such as pushing in with heavy equipment be used.

3. The remainder of the trench, except as described below, shall then be refilled evenly to the required height in layers, each layer not to exceed six inches (6") in thickness after compaction. Mechanical tampers shall be used so as to produce a density of backfill (as determined by weight) at the bottom of each layer of not less than 95 percent (95%) of the optimum density of that material based upon the AASHTO T-180 modified proctor. The earth shall be properly rammed as directed, and wetted as required as the work progresses.

4. Care shall be taken to carry the fill up evenly on opposite side of the sewer, other trench excavations, and around the sides of all structures.

Attachment: Holly Hill LS_13 Rehabilitation_Bid Set Specifications_04.30.19 (2019-R-38 : Lift Station #13 Rehabilitation)

D. If, in the opinion of the ENGINEER, the material being used for backfilling is of such character that satisfactory results cannot be obtained by tamping and ramming, the CONTRACTOR shall backfill and puddle the excavations in such manner and at such times as the ENGINEER may direct.

E. If the material excavated is not clean earth, as above specified, the best of the materials excavated shall be used in backfilling, in position and manner as directed by the ENGINEER.

F. In rock trenches, selected earth, sand, or gravel shall be provided and used as backfill in the manner hereinbefore described to a height of two feet (2') above the top of the sewer. The backfill for the balance of the trench in all cases shall be of good earth, sand, or gravel, which may contain stores not more than six inches (6") in largest dimensions, but not in proportion exceeding 20 percent (20%) of the total volume of backfill.

G. No bulkheads, or retaining walls for the backfilling, will be allowed in the trenches over the sewer, except for temporary use.

H. Should there be a deficiency of proper material for refilling the CONTRACTOR shall furnish acceptable material at his own cost and expense.

I. No house ashes, putrescible refuse or other material of unsatisfactory character shall be used in refilling, and the CONTRACTOR shall not permit the trench to be used as a dumping ground for refuse.

J. Testing of backfill in trenches shall be performed as deemed necessary by the ENGINEER or his representatives; the CONTRACTOR will supply and pay for the testing.

3.12 BORROW EXCAVATION

A. In cases where the amount of embankment exceeds the amount of excavation within the limits of the site as indicated by the Drawings, and where material is not available from other sources of contracts, the CONTRACTOR shall obtain sufficient, suitable material from borrow pits located entirely beyond the limits of the site unless the ENGINEER gives written permission to obtain such material from an area within the site.

B. The CONTRACTOR shall notify the ENGINEER sufficiently in advance of borrow excavation requirements to permit the ENGINEER to determine necessity and to view the proposed borrow pit.

C. Borrow obtained from within the site shall be removed to uniform lines and grades satisfactory to the ENGINEER, and in such a manner as will not to detract from the general appearance of the improvement and shall not create unsatisfactory conditions.

Attachment: Holly Hill LS_13 Rehabilitation_Bid Set Specifications_04.30.19 (2019-R-38 : Lift Station #13 Rehabilitation)

D. All borrow pits shall be stripped of brush, roots, grass and other vegetation prior to removal of material for embankment purposes.

3.13 BUILDINGS AND STRUCTURES

A. Excavation.

1. All excavation for buildings and structures shall be performed in the dimensions indicated on the Drawings. If suitable bearing is not encountered at the planned footing or foundation elevations, the excavation shall be carried to such elevations as are approved by the ENGINEER.

2. Prior to construction of foundations, the excavation shall be inspected by the ENGINEER and no foundation work shall be started prior to the ENGINEER's approval of the excavation. Care shall be exercised to avoid excavation below the depths indicated on the Drawings or as directed by the ENGINEER.

3. Where excavation is made below plan elevation or below elevations directed by the ENGINEER. Where excavation is made below plan elevation or below elevations directed by the ENGINEER, through the fault of the CONTRACTOR, the excavation shall be restored to the proper elevation in the manner described for backfill below, or the heights of walls or footings shall be increased, as may be directed by the ENGINEER, at the expense of the CONTRACTOR.

B. Drainage.

1. Grading in the vicinity of structures shall be controlled to prevent water running into excavated areas. Any accumulation of water in excavations shall be removed by pumping or other means at the CONTRACTOR's expense.

C. Backfill.

1. After completion of footings and walls, and the removal of forms, and prior to backfilling, the excavation shall be cleaned of all trash and debris.

2. Backfill material shall consist of the excavation or other materials free from trash, lumbar or other debris. It shall be placed in horizontal layers not exceeding six inches (6") in depth, moistened if required and compacted by hand or mechanical tampers to a density to prevent excessive settlement.

Attachment: Holly Hill LS_13 Rehabilitation_Bid Set Specifications_04.30.19 (2019-R-38 : Lift Station #13 Rehabilitation)

3.14 RESPONSIBILITY FOR CONDITION OF EXCAVATION

A. The CONTRACTOR shall be responsible for the condition of all excavations made by him. All slides and cave-ins shall be removed without extra compensation, at whatever time and under whatever circumstances they may occur.

B. The failure of the ENGINEER to order the use of bracing or sheeting or a better quality, grade or section, or larger sizes of steel or timber, or to order sheeting, bracing, struts, or shoring to be left in place, or the failure to give orders or directions as to the manner or methods of placing or driving sheeting, bracing jacks, wales, rangers, or other members, shall not in any way or to any extent relieve the CONTRACTOR of any responsibility concerning the condition of excavation or of any of his obligations under the Contract; nor shall any delay, whether caused by any action or want of action on the part of the CONTRACTOR, or by any act of the OWNER, or his agents, or employees, resulting in the keeping of an excavation open longer than would otherwise have been necessary, relieve the CONTRACTOR or from the necessity of properly and adequately protecting the excavation from caving or slipping, nor from any of his obligations under the Contract relating to injury of persons or property, nor entitle him to any claim for extra compensation.

3.15 PROTECTION OF PROPERTY AND STRUCTURES

A. The CONTRACTOR shall, at his own expense, sustain in their places, and protect from direct or indirect injury, all pipes, tracks, walls, buildings, and other structures or property in the vicinity of his work, whether above or below the ground, or that may appear in the excavation. He shall at all times have a sufficient quantity of timber and plank, chains, ropes, trench boxes, and other material and equipment, on the ground and shall use them as necessary for sheeting his excavations and for sustaining or supporting any structures that are uncovered, undermined, endangered, threatened or weakened.

B. The CONTRACTOR shall take all risks attending the presence of proximity of pipes, poles, tracks, walls, buildings, and other structures and property, of every kind and description, in or over his excavation, or in the vicinity of his work, whether above or below the surface of the ground; and he shall be responsible for all damages and assume all expense for direct or indirect injury, caused by his work, to any of time, or to any person or property by reason of injury to them, whether such structures are not shown on the Drawings.

C. Where necessary, in order to keep one side of the street or roadway free from any obstruction or to keep the material piled alongside the excavation from falling on private property outside the right of way, a safe and suitable fence shall be placed alongside the excavation.

D. In the event of encountering quicksand, subsurface streams or similar dangerous contingencies, or where passing especially heavy building or any structures which by their construction or position might bring a great pressure upon the excavations the

Attachment: Holly Hill LS_13 Rehabilitation_Bid Set Specifications_04.30.19 (2019-R-38 : Lift Station #13 Rehabilitation)

right is reserved by the ENGINEER to direct that such buildings, or structures, shall be underpinned, or supported and protected, or that special sheeting shall be driven in such a manner and to such depth, as may be directed, or that only a short length of excavation shall be opened at one time; and furthermore, if necessary, that the excavation shall be securely sheeted and braced on all sides, after the manner of a shaft, and that the permanent work shall be constructed in the same manner and the shaft backfilled before another opening is made. Any work done as above directed shall be at the cost and expense of the CONTRACTOR.

E. The ENGINEER reserves the right under such conditions to stop the excavation or any other part of the work, and to require the CONTRACTOR to complete the structure and the backfilling up to such a point as the ENGINEER may direct before proceeding further with the excavation; and the CONTRACTOR shall not thereby become entitled to demand or to receive any allowance or compensation, other than an extension of the contract time for as many days as the ENGINEER may determine that the work was delayed by such stoppage.

3.16 OBSTRUCTION SHOWN ON DRAWINGS

A. Certain information regarding the reputed presence, size, character, and location of existing underground structures, pipes and conduits has been shown on the Contract Drawings. There is no certainty of the accuracy of this information. The location of underground structures shown may be inaccurate and other obstructions not shown may be encountered.

B. The CONTRACTOR hereby distinctly agrees that the OWNER is not responsible for the correctness or sufficiency of the information given; that in no event is this information to be considered as a part of the Contract; that he shall have no claim for delay or extra compensation on account of incorrectness of information given, or on account of the insufficiency or absence of information regarding obstructions either revealed or not revealed by the Drawings; and that he shall have no claim for relief from an obligation of responsibility under the Contract, in case the location, size or character of any pipe or other underground structure is not as indicated on the Drawings; or in case any pipe or other underground structure is encountered that is not shown on the Drawings.

C. The CONTRACTOR is solely and completely responsible for contacting utility providers and locating services to field locate existing utilities 48 hours in advance of his activities. If inadequate locations are made, or if hand-digging of "test holes" is deemed necessary, this shall be accomplished and affected by the CONTRACTOR at no additional expense to the OWNER.

3.17 REMOVAL OF OBSTRUCTIONS

A. Should the position of any pipe, conduits, pole, or other structures, above or below the ground be such as, in the opinion of the ENGINEER, to require its removal, realignment, or change due to work to be done under the Contract, the work of

Attachment: Holly Hill LS_13 Rehabilitation_Bid Set Specifications_04.30.19 (2019-R-38 : Lift Station #13 Rehabilitation)

removal, realignment, or change will be done as extra work, or will be done by the OWNER of the obstructions, without cost to the CONTRACTOR; but the CONTRACTOR shall uncover and sustain the structures, at his own expense, before such removal and before and after such realignment or change as constituting part of the Contract; and the CONTRACTOR shall not be entitled to any claim for damage or extra compensation on account of the presence of said structure, or on account of any delay in the removal or rearrangement of the same.

B. The CONTRACTOR shall, without extra compensation, break through and reconstruct, if necessary, the invert or arch of any sewer, culver, or conduit that may be encountered, if the said structure is in such a position that in the judgment of the ENGINEER, as not to require its removal, realignment, or complete reconstruction.

C. The CONTRACTOR shall not interfere with any persons, firms, or corporations, or with the OWNER in protecting, removing, changing, or replacing their pipes, conduits, poles, or other structures; but he shall suffer said persons, firms, or corporations, or the OWNER to take all such measures as they may deem necessary or advisable for the purpose aforesaid, and the CONTRACTOR shall thereby be in no way relieved of any of his responsibilities under this Contract. At railway or railroad track crossings or paralleling, any expense to which the OWNER of the trackage is put in shoring up tracks, or in maintaining traffic, shall be borne by the CONTRACTOR, whether the same is billed directly to him, or the OWNER. Should any such bill be unpaid by the CONTRACTOR, before final payment under the Contract is made, the OWNER shall be empowered to pay said bill and retain the amount thereof, from any monies due, or to become due the CONTRACTOR.

D. Except where trees are in rights-of-way, in immediate proximity to the excavation, they shall not be cut down except by authorization of the ENGINEER and the CONTRACTOR shall have no claim for the extra compensation owing to the fact that he may be required to excavate by hand, or tunnel in the vicinity of trees that may be left standing.

3.18 CHANGE OF EXCAVATION LOCATION

A. In case the ENGINEER shall direct that the location of a trench or other excavation be changed from that shown on the Drawings, on account of the presence of an obstruction, or from other cause, or if a changed location shall be authorized upon the CONTRACTOR's request, the CONTRACTOR shall not be entitled to extra compensation, or to a claim for damage, provided that the change is made before the excavation is begun. If, however, such change, made at the direction of the ENGINEER, involves the abandonment of excavation already made, such abandoned excavation, together with the necessary refill, will be classed as miscellaneous excavation. In the event that the excavation is abandoned in favor of a new location, at the CONTRACTOR's request, the abandoned excavation and refill shall be at the CONTRACTOR's expense.

Attachment: Holly Hill LS_13 Rehabilitation_Bid Set Specifications_04.30.19 (2019-R-38 : Lift Station #13 Rehabilitation)

B. Minor changes in alignment of pipe or other structures to accommodate the actual location of existing facilities shall be considered typical of construction activities and no additional compensation will be made for changes of this nature.

3.19 CLEANUP

A. As the trenches are filled in and the work completed, the CONTRACTOR shall immediately and at his own cost and expense remove and dispose of all surplus earth, stone or other material from the work, in such manner and at such point or points, as he may select or provide, subject to the approval of the ENGINEER; or he may deposit the same, either with or without rehandling, at any point or points on the line of the work covered by the Contract, if so directed by the ENGINEER; and shall leave all roads, sidewalks and other places free, clear and in good order. In case the CONTRACTOR shall fail or neglect to do so, or to make satisfactory progress in doing so within 24 hours after the receipt of a written notice from the ENGINEER, the OWNER may remove such surplus material and clear the roadways, sidewalks and other places, and the cost of said work shall be charged to the CONTRACTOR and deducted from any monies due or to become due him under the Contract.

B. All surplus earth or other material wasted on public property shall be evenly spread and left in a neat and smooth condition. All removed materials shall become the property of the OWNER, if they so desire. If the OWNER does not want the removed materials, surplus materials will be removed by the CONTRACTOR at no extra cost to the OWNER.

C. As soon as the trenches are refilled, all surplus earth, sand or rubbish shall be removed and kept removed to a point not more than two hundred feet (200') from the head of the open trench, unless otherwise authorized by the ENGINEER.

3.20 MAINTENANCE OF BACKFILLED TRENCH SURFACES

A. The CONTRACTOR shall crown to such height, as directed by the ENGINEER, the top of all backfilled trench excavations. The CONTRACTOR shall also maintain these crowned surfaces to the satisfaction of the ENGINEER, without additional compensation, from the time of crowning operation to and including a period of eight (8) months beyond date of a Certificate of Completion of the work under this contract.

B. The CONTRACTOR shall be responsible for any injury or damage resulting from lack of required trench maintenance during the prescribed maintenance period. If the CONTRACTOR does not satisfactorily provide specified maintained surfaces or begin repairs of such surfaces when needed, within 24 hours after written notice from the ENGINEER, such work may be done by the OWNER and the cost thereof charged against the CONTRACTOR.

END OF SECTION

Attachment: Holly Hill LS_13 Rehabilitation_Bid Set Specifications_04.30.19 (2019-R-38 : Lift Station #13 Rehabilitation)

SECTION 31 23 19

DEWATERING

PART 1 – GENERAL

1.01 DESCRIPTION OF WORK

A. Scope: In general, the work specified in this section of the specifications shall consist of supplying labor, materials, and plant, and performing all work necessary to lower and control the groundwater levels and hydrostatic pressures to permit all excavations and construction specified under this Contract to be performed in the dry.

B. Examination of Site: The CONTRACTOR shall take all steps that he considers necessary to familiarize himself with the site conditions, the ground conditions, and the groundwater conditions. It is expressly understood that neither the OWNER nor the ENGINEER will be held responsible for any interpretations or conclusions drawn by the CONTRACTOR.

PART 2 – PRODUCTS

2.01 METHOD AND EQUIPMENT

A. The CONTRACTOR may use any dewatering method he deems feasible so long as it results in working in the dry and in stable soil conditions. It is the intent of these specifications that an adequate dewatering system be installed to lower and control the groundwater in order to permit excavation, construction of the structures, construction of pipelines, and the placement of the fill materials, all to be performed under dry conditions. The dewatering system shall be adequate to pre-drain the water-bearing strata above and below the bottom of the foundations, the drains, the sewers, and all other excavations. An adequate weight of fill material shall be in place prior to discontinuing operation of dewatering to prevent buoyancy of the structure.

PART 3 – EXECUTION

3.01 GENERAL

A. The CONTRACTOR shall be solely responsible for the arrangement, location, and depths of the dewatering system necessary to accomplish the work described under this section of the specifications. The dewatering shall be accomplished in a manner that will reduce the hydrostatic head below any excavation to the extent that the water level and piezometric water levels in the construction area are below the prevailing excavation surface; will prevent the loss of fines, seepage,

Attachment: Holly Hill LS_13 Rehabilitation_Bid Set Specifications_04.30.19 (2019-R-38 : Lift Station #13 Rehabilitation)

boils, quick conditions, or softening of the foundation strata; will maintain stability of the sides and bottom of the excavation; and will result in all construction operations being performed in the dry.

B. Disposal of Water: The CONTRACTOR shall promptly dispose of all water removed from the excavations in such a manner as will not endanger public health, damage public or private property, or affect adversely any portion of the work under construction or completed by him or any other Contractor. CONTRACTOR shall obtain written permission from the OWNER of any property involved before digging ditches or constructing water courses for the removal of water.

C. Siltation and Erosion:

1. The CONTRACTOR shall take steps and make suitable provisions to minimize siltation and erosion which may result from, or as a result of, his operations during the course of construction of this project.

2. The methods and provisions utilized by the CONTRACTOR to minimize siltation and erosion shall be approved by the ENGINEER and shall be in conformance with current Florida Department of Environmental Protection and St. Johns River Water Management District practices and regulations.

D. Inadequate System: If the dewatering requirements are not satisfied due to inadequacy or failure of the dewatering system, then loosening of the foundation strata, or instability of the slopes, or damage to the foundations or structures may occur. The supply of all labor, materials, and plant, and the performance of all work necessary to carry out additional work for reinstatement of the structures of foundation soil resulting from such inadequacy or failure shall be undertaken by the CONTRACTOR to the approval of the ENGINEER, and at no additional expense to the OWNER.

END OF SECTION

Attachment: Holly Hill LS_13 Rehabilitation_Bid Set Specifications_04.30.19 (2019-R-38 : Lift Station #13 Rehabilitation)

SECTION 31 23 33

TRENCHING, BACKFILLING, AND COMPACTING

PART 1 – GENERAL

1.01 DESCRIPTION OF WORK

A. The extent of trenching, backfilling, and compacting is shown on the drawings.

B. This section includes furnishing equipment, labor, and materials, and performing all operations necessary and incidental to perform the required work.

PART 2 – PRODUCTS (NOT USED)

PART 3 – EXECUTION

3.01 CLEARING OF THE SITE

A. The site of the work shall be cleared of all trees, shrubs, paving and objectionable material, which interfere with the prosecution of the proposed work. Trees and shrubs which will not interfere with construction shall be protected from damage. Clearing shall be considered as an incidental item of excavation.

3.02 EXCAVATION

A. General:

1. Perform excavation described of whatever substance encountered to the dimensions and depths specified or shown on the drawings. Undercutting will not be permitted, except when ordered by the ENGINEER. Material suitable for backfill shall be stockpiled near the site. Rock or other material undesirable for backfill shall be spoiled outside the area in a neat manner, as directed by the ENGINEER. Where it is necessary to cut roots projecting into an excavation or where it is necessary to trim branches for equipment clearance, all severed root ends, or cuts to branches over a half inch (1/2") diameter shall be treated with an asphalt base pruning paint. Backfill over exposed roots as soon as possible.

B. Rock:

1. Where encountered in the trench bed, rock shall be excavated to a depth of one-quarter (1/4) of the pipe diameter below the bottom of the pipe but in no case less than four inches (4"). All undercut trench excavation shall be

Attachment: Holly Hill LS_13 Rehabilitation_Bid Set Specifications_04.30.19 (2019-R-38 : Lift Station #13 Rehabilitation)

backfilled and tamped with materials as specified in the following paragraphs under Unstable Subgrade.

C. Unstable Subgrade:

1. In the event that unsuitable material is encountered at or below the excavation depth specified or shown on the drawings, the ENGINEER shall be notified. Such material shall be removed and replaced with suitable material. Methods and materials used for replacement shall be one of the following as directed by the ENGINEER in writing.

   a. Suitable earth or sand compacted in the trench. Materials shall be furnished as a part of the Bid Proposal item covering excavation and backfill.
   b. Gravel or crushed limerock, compacted in the trench and paid for under the appropriate item.
   c. Existing materials stabilized after removal and then replaced and compacted in the trench at no additional cost to the OWNER.

2. The ENGINEER shall determine the methods and materials to be used, based upon the condition of the excavation, the pipe structure to be supported, and the availability and character of stabilizing materials.

D. Trenches:

1. Keep pipe laying operation as close to the excavation operation as possible during the prosecution of the work. The ENGINEER reserves the right to stop the excavation at any time when, in his opinion, the excavation is opened too far in advance of the pipe laying.

2. Pipe trenches shall be only of sufficient width to provide a free working space on each side of the pipe. To prevent excess pressure on the pipe, the maximum width of trench at the top of the pipe and at the bottom of the trench shall not be greater than two feet (2') more than the greatest exterior diameter of the pipe. If this maximum width is exceeded, it shall be the CONTRACTOR's responsibility to provide, at no additional cost to the OWNER, such additional bedding or select backfill materials as the ENGINEER may require. The excavation below the spring line shall be made to conform as near as possible to the shape of the lower third of the pipe. To protect the pipe lines from unusual stresses, all work shall be done in open trenches. Excavation shall be made for bells of all pipes and of sufficient depth to permit access to the joint for construction and inspections. In no case, will the bells be used to support the body of the pipe.

Attachment: Holly Hill LS_13 Rehabilitation_Bid Set Specifications_04.30.19 (2019-R-38 : Lift Station #13 Rehabilitation)

3. In order to avoid existing utilities, at times it may be necessary for the pipe to be laid deeper than the minimum cover specified in the preceding paragraph. At such time the CONTRACTOR will not be allowed extra compensation for additional excavation involved.

4. In case excavation has been made deeper than necessary, a layer of concrete, fine gravel, or other material satisfactory to the ENGINEER shall be placed, at no extra cost, to secure a firm foundation for the lower third of each pipe. Where possible, excavated material shall be placed so as not to interfere with public travel. Bridging shall be provided to afford necessary access to public or private premises. Bridging shall be considered as part of the excavation operation and shall be supplied at no additional cost to the OWNER.

E. Structural (For inlets, manholes, and similar structures):

1. Remove sufficient material to allow proper space for erecting and removing forms. The elevations of the bottoms of footings, if shown on the drawings, shall be considered as approximate only, and the ENGINEER may order, in writing, such changes in dimensions or elevations of footings as may be deemed necessary to secure a satisfactory foundation. Excavation for structures shall be sufficient to leave at least 12 inches (12") in the clear between their outer surfaces and the embankment or timber that may be used to protect them. Backfill of earth under structures will not be permitted. Excess excavation for structures shall be filled with thoroughly compacted sand, gravel, or concrete at the expense of the CONTRACTOR.

2. After excavation for a structure is completed, the CONTRACTOR shall notify the ENGINEER to that effect. No concrete or reinforcing steel shall be placed until the ENGINEER has approved the depth of the excavation and the character of the foundation material.

F. Sheeting and Shoring:

1. The CONTRACTOR shall provide all trench and structural bracing, sheeting or shoring necessary to construct and protect the excavation, existing utilities, structures, and private property of all types and as required for the safety of the employees. Sheeting shall be removed or cut off by the CONTRACTOR during backfilling operations as directed by the ENGINEER. Removal of shoring for structures shall be done in such a manner as not to disturb or mar finished masonry or concrete surfaces.

Attachment: Holly Hill LS_13 Rehabilitation_Bid Set Specifications_04.30.19 (2019-R-38 : Lift Station #13 Rehabilitation)

3.03 DRAINAGE

A. Grading shall be controlled in the vicinity of excavations so that the surface of the ground will be properly sloped to prevent water from running into trenches or other excavated areas. Any water which accumulates in the excavations shall be removed promptly by well point or by other means satisfactory to the ENGINEER in such a manner as to not create a nuisance to adjacent property or public thoroughfare. Trenches shall be kept dry while pipe is being laid. Bridging of dewatering pipe shall be provided where necessary. Pumps and engines for well point systems shall be operated with mufflers, and at a minimum noise level suitable to a residential area. The CONTRACTOR will not be allowed to discharge water into the OWNER's storm drainage system without the written approval of the ENGINEER. Approval will be subject to the condition that the storm sewer be returned to its original condition.

B. The CONTRACTOR is responsible for carrying the water to the nearest ditch or body of water and for obtaining the necessary permission to use same. The CONTRACTOR shall be financially responsible for any nuisance created due to carrying off water from his drainage system.

3.04 BACKFILL

A. Trenches:

1. Trenches shall be backfilled immediately after the pipe is laid unless other protection for the pipe line is provided. Clean earth, sand, crushed limerock, or other material approved by the ENGINEER shall be used for backfill. Backfill material shall be selected, deposited and compacted (simultaneously on both sides of the pipe) so as to eliminate the possibility of lateral displacement of the pipe. Backfill material shall be solidly tamped around the pipes in layers to a level at least one foot (1') above the top of the pipe. Each layer shall be compacted to a maximum thickness of six inches (6").

2. In unpaved areas, the remainder of the backfill shall be deposited and then compacted by puddling, water flooding or mechanical tampers. Mechanical tamping of layers in unpaved areas shall be to a maximum thickness of 12 inches (12"). In areas to be paved or repaved, the entire depth of backfill shall be deposited in layers and compacted by hand or mechanical tampers to a maximum thickness of six inches (6"). Compaction shall be carried out to achieve a density of at least 98 percent (98%) of the maximum density as determined by AASHTO, Method T-180. Under areas to be paved, puddling may be used for backfill consolidation after tamping to one foot (1') over the pipe, as specified, provided the method is first approved by the ENGINEER and the density requirements are met.

Attachment: Holly Hill LS_13 Rehabilitation_Bid Set Specifications_04.30.19 (2019-R-38 : Lift Station #13 Rehabilitation)

3. In areas to be paved, density tests for determination of the specified compaction shall be made by a testing laboratory and spaced one in every 300 feet (300') of trench cut. It is the intent of this specification to secure a condition where no further settlement of trenches will occur. When backfilling is completed, the roadway base for pavement replacement may be placed immediately. It will be the responsibility of the CONTRACTOR to restore the surface to the original grade wherever settlement occurs.

B. Structural:

1. After completion of foundation footings and walls and other construction below the elevation of the final grades, and prior to backfilling, forms shall be removed and the excavation shall be cleared of all trash and debris. Material for backfilling shall consist of the excavation, borrow sand or other approved materials, and shall be free of trash, lumber, or other debris. Backfill shall be placed in horizontal layers not in excess of nine inches (9") in thickness, and have moisture content such that a density may be obtained to prevent excessive settlement or shrinkage. Each layer shall be compacted by hand or approved machine tampers with extreme care being exerted not to damage pipe or structures. Backfill shall be placed and compacted evenly against the exposed surfaces to prevent undue stress on any surface.

3.05 RESTORATION OF SURFACE IMPROVEMENTS

A. Roadways, including shoulders, alleys, and driveways of shell, limerock, stabilized soil or gravel, grass plots, sod, shrubbery, ornamental trees, signs, fences, or other surface improvements on public or private property which have been damaged or removed in excavating, shall be restored to conditions equal to or better than conditions existing prior to beginning work. Restoration of shoulders shall consist of sodding, seeding and mulching, or stabilizing with limerock as selected by the ENGINEER. The cost of doing this work shall be included in the cost of the various applicable items.

B. Materials for unpaved roadways, road shoulders, alleys, or drive-ways, shall be compacted to a minimum of 98 percent (98%) of the maximum density as determined by AASHTO, Method T-180. The cost of this work and furnishing new materials shall be included in the cost of the applicable items of work as no separate payment will be made, unless a separate bid item is provided.

Attachment: Holly Hill LS_13 Rehabilitation_Bid Set Specifications_04.30.19 (2019-R-38 : Lift Station #13 Rehabilitation)

3.06 FINE GRADING

A. Finished areas around structures shall be graded smooth and hand raked and shall meet the elevations and contours shown on the drawings. Lumber, earth clods, rocks, and other undesirable materials shall be removed from the site.

3.07 DISPOSAL OF MATERIAL

A. Such portions of the excavated materials as needed and as suitable shall be used for backfilling and grading about the completed work to the elevations as shown on the drawings or as directed. Excavated material in excess of the quantity required for this purpose shall be disposed of by the CONTRACTOR. The CONTRACTOR shall leave the earth over the trenches or other excavations in a neat and uniform condition acceptable to the OWNER.

3.08 TESTS

A. The CONTRACTOR shall furnish facilities for making all density tests and make such restorations as may be necessary due to test operations. All density tests on backfill or base replacement will be made by a commercial testing laboratory employed by the OWNER and at such locations as may be recommended by the ENGINEER. The CONTRACTOR shall pay for all tests where the densities, as determined by the specified tests, fall below the required minimums (failed tests).

END OF SECTION

Attachment: Holly Hill LS_13 Rehabilitation_Bid Set Specifications_04.30.19 (2019-R-38 : Lift Station #13 Rehabilitation)

SECTION 33 01 30.83

WETWELL LINING SYSTEMS

PART 1 – GENERAL

1.01 SITE ACCESS

A. Accessibility to the master lift station shall be the responsibility of the CONTRACTOR, and all expenses associated with work site accessibility should be taken into consideration as part of the CONTRACTOR's bid preparation. Damage to existing pavement surfaces and base courses, and/or other surface improvements, as a result of the CONTRACTOR's activities, shall be restored to like-new condition by the CONTRACTOR at his sole expense. The CONTRACTOR shall implement all required measures to provide the OWNER's personnel and equipment with complete access to all work site areas during the entire course of performing this project.

1.02 SCOPE OF WORK

A. The major elements of the proposed project work are summarized as follows: furnish all labor, materials, and equipment necessary to rehabilitate the interior surface areas of an existing sewer lift station structure using a structural composite liner system. The composite liner system shall consist of both a high strength structural cementitious build-up layer and a corrosion resistant 100 percent (100%) solids epoxy coating system. The work includes mobilization, bypass pumping (as Additional Pricing), removal of any existing deteriorated coating, preparation of lift station structure to be lined, furnishing and applying the specified cementitious and epoxy coating materials to the interior surface areas of the lift station, applicable QA/QC testing, clean-up, and demobilization.

1.03 INSPECTION OF THE WORK

A. The ENGINEER will provide construction observation services to monitor project quality and determine conformance of the work with the specifications. Each step of the work described herein is subject to inspection and approval by the ENGINEER prior to proceeding with subsequent phases of the work.

1.04 MATERIALS AND EQUIPMENT

A. All materials, equipment, and types of construction shall be in accordance with these Technical Specifications and shall conform to the requirements of all applicable laws, ordinances, and codes.

Attachment: Holly Hill LS_13 Rehabilitation_Bid Set Specifications_04.30.19 (2019-R-38 : Lift Station #13 Rehabilitation)

B. All materials and equipment to be incorporated into the work shall be new, unused, and properly designed for the use intended. Materials and/or equipment which, in the opinion of the ENGINEER are inferior or of a lower grade than specified, or required, will not be accepted and shall be removed immediately from the project site.

1.05 EQUIVALENT PRODUCTS AND MATERIALS

A. If "Or Equal" products are allowed herein, then all material or equipment submitted for consideration as "Or Equal" to that specified must include sufficient written information and data to demonstrate that the material or equipment conforms to the Contract Document requirements. The ENGINEER shall be the sole judge as to whether or not such material or equipment is equal to that specified or required herein.

B. Upon rejection of any material or equipment submitted as the equivalent of that specifically named in the Contract, the CONTRACTOR shall furnish the specified material or equipment at no additional cost to the OWNER.

C. Neither the approval by the ENGINEER of any alternate material or equipment as being equivalent to that specified, nor the furnishing of the material or equipment specified, shall in any way relieve the CONTRACTOR of responsibility for failure of the material or equipment, due to faulty design, material, or workmanship, to perform the functions required by the Contract Documents.

1.06 MATERIAL AND EQUIPMENT DELIVERY AND STORAGE

A. The CONTRACTOR shall deliver materials in sufficient quantities to ensure the most timely and uninterrupted progress of the work. All materials and equipment shall be stored in strict accordance with the manufacturer's recommendations. Products shall also be stored and handled according to their Material Safety Data Sheets (MSDS).

1.07 SPILL OR DISCHARGE OF WASTEWATER

A. The discharge of wastewater into the environment is prohibited. All spills or discharges of wastewater shall be immediately reported to the ENGINEER, the OWNER, and the F.D.E.P. The CONTRACTOR also shall immediately control, contain, and stop the spill or discharge and shall repair any damage at no additional cost to the OWNER.

B. The CONTRACTOR is solely responsible for all fines and labor, materials, and equipment costs incurred by the OWNER for wastewater spills or discharges to the environment resulting from the CONTRACTOR's actions or the CONTRACTOR's negligence.

Attachment: Holly Hill LS_13 Rehabilitation_Bid Set Specifications_04.30.19 (2019-R-38 : Lift Station #13 Rehabilitation)

1.08 TECHNICAL REFERENCES

A. ASTM – The published standards of the American Society for Testing and Materials, West Conshohocken, PA.

B. NACE – The published standards of National Association of Corrosion Engineers (NACE International), Houston, TX.

C. SSPC – The published standards of the Society of Protective Coatings, Pittsburgh, PA.

D. Los Angeles County Sanitation District – Evaluation of Protective Coatings for Concrete.

E. ASTM C 109 – Compressive Strength of Hydraulic Cement Mortars.

F. ASTM C 293 – Flexural Strength of Concrete.

G. ASTM C 321 – Bond Strength of Chemical Resistant Mortars.

H. ASTM C 666 – Resistance of Concrete to Rapid Freezing/Thawing.

I. ASTM C 596 – Drying Shrinkage of Mortar Containing Cement.

J. AASHTO –T277 – Rapid Chloride Permeability of Cement.

K. ASTM C 1244 – Concrete Sewer Manholes by Negative Air Pressure (Vacuum) Test.

L. ASTM D 638 – Tensile Properties of Plastics.

M. ASTM D 790 – Flexural Properties of Unreinforced and Reinforced Plastics.

N. ASTM D 695 – Compressive Properties of Rigid Plastics.

O. ASTM D 4541 – Pull-off Strength of Coatings Using a Portable Adhesion Tester.

P. ASTM D 2584 – Volatile Matter Content.

Q. ASTM D 2240 – Durometer Hardness, Type D.

R. ASTM D 543 – Resistance of Plastics to Chemical Reagents.

S. ASTM C 109 – Compressive Strength Hydraulic Cement Mortars.

Attachment: Holly Hill LS_13 Rehabilitation_Bid Set Specifications_04.30.19 (2019-R-38 : Lift Station #13 Rehabilitation)

T. ACI 506.2-77 – Specifications for Materials, Proportioning, and Application of Shotcrete.

U. ASTM C 579 – Compressive Strength of Chemically Setting Silicate and Silica Chemical Resistant Mortars.

V. NACE 6/SSPC SP13 – Joint Surface Preparation Standard - Surface Preparation of Concrete.

1.09 SUBMITTALS

A. Product Data.

1. Technical data sheet on each product proposed to be furnished demonstrating compliance with these specifications including independent ASTM test results indicating the product conforms to the published technical data.

2. MSDS for each product proposed to be furnished.

B. Application Guidelines.

1. Project specific guidelines and recommendations.

2. Proof of any required federal, state or local permits or licenses necessary for the project.

3. Design details for any ancillary systems and equipment to be used in site and surface preparation, application, and testing.

4. Written warranty.

C. Certifications.

1. Submit all Applicator Qualifications specified in Part 1.10 A.

D. "Or Equal" Submittal. In order to be considered as an equal product, said product will have to meet the minimum physical properties of the approved products as referenced in Paragraph 2.4 as measured by the applicable ASTM standards referenced in Paragraph 1.8. Testing results must be performed and presented by a third-party testing laboratory.

E. "Or Equal" products shall be submitted to the ENGINEER a minimum of two (2) weeks prior to bid date. In order for a product to be considered "equal" the submitted product must receive written approval via addendum to the current bid documents prior to the bid date. Only applicators that have been trained and

Attachment: Holly Hill LS_13 Rehabilitation_Bid Set Specifications_04.30.19 (2019-R-38 : Lift Station #13 Rehabilitation)

certified by the approved liner system manufacturers are allowed to install the structural liner system specified herein.

1.10 QUALITY ASSURANCE

A. Applicator Qualifications.

1. Manufacturer certification that Applicator has been trained and approved in the handling, mixing, and application of the products to be used.

2. Certification that the equipment to be used for applying the products has been manufactured or approved by the cement or epoxy coating manufacturer and Applicator personnel have been trained and certified for proper use of the equipment.

3. Applicator shall initiate and enforce quality control procedures consistent with applicable ASTM, NACE, and SSPC standards and both the cementitious and epoxy material manufacturer's recommendations.

4. The installer/applicator shall submit a list of at least five (5) project references including project name, location, work performed, contract amount, completion date, contact person and phone number, and where similar work as specified herein has been performed.

1.11 WARRANTY

A. The Applicator shall warrant all work against defects in materials and workmanship for a period of one (1) year, unless otherwise noted, from the date of final acceptance of the project. Applicator shall, within a reasonable time after receipt of written notice thereof, repair defects in materials or workmanship which may develop during said one (1) year period, and any damage to other work caused by such defects or the repairing of same, at his own expense and without additional cost to the OWNER.

PART 2 – LIFT STATION SURFACE CONDITION ASSESSMENT

2.01 QUALIFICATION OF APPLICABLE SURFACE REPAIR

A. The existing substrate of the master lift station to be rehabilitated under this project has been subjected to harsh biogenic hydrogen sulfide corrosion during its operational lifetime. It is anticipated that the depth of this corrosive attack and resulting degradation will likely vary by surface region throughout the interior walls, floor, and ceiling of the structure. In consideration of this variance in surface deterioration, the CONTRACTOR, in conjunction with the OWNER will conduct a surface area analysis of the existing substrate areas prior to

Attachment: Holly Hill LS_13 Rehabilitation_Bid Set Specifications_04.30.19 (2019-R-38 : Lift Station #13 Rehabilitation)

commencement of any lining application. Surface areas will be classified based on the following condition assessments.

1. Condition I Surface Areas.

   a. The surface area, once cleaned and abraded, has experienced only minor biogenic corrosion to the host substrate, and deteriorated areas do not appear to compromise the load bearing integrity of the surface area. The surface loss in the Condition I areas should not exceed one inch (1.0").

2. Condition II Surface Areas.

   a. The surface area, once cleaned and abraded, may exhibit corrosion as evidenced in Condition I, but also has some areas with moderate to severe deterioration. Degradation may include signs of initial structural fatigue; however, the existing surface area should be sufficient to sustain and support both soil and live loading. The surface loss in the Condition II areas should not exceed one and a half inches (1.5").

2.02 APPROPRIATE CONDITION BASED REPAIR METHODS

A. Subsequent to the aforementioned condition assessment, the CONTRACTOR will execute the application of the appropriate condition based repair method. The appropriate repair method shall be based on the following minimum design.

1. All surface areas identified as Condition I shall receive application of the specified calcium aluminate cementitious structural build-back material at a minimum thickness of one inch (1.0").

2. All surface areas identified as Condition II shall receive application of the specified calcium aluminate cementitious structural build-back material at a minimum thickness of one and a half inches (1.5").

3. All interior surface areas, regardless of area condition assessment, will receive an application of the approved epoxy coating material at a minimum uniform thickness of 150 mils.

PART 3 – PRODUCTS

3.01 EXISTING PRODUCTS

A. Cementitious patching and repair materials shall not be used unless proof of suitability and compatibility with the herein approved cementitious and epoxy materials is provided in writing by the cementitious and epoxy material

Attachment: Holly Hill LS_13 Rehabilitation_Bid Set Specifications_04.30.19 (2019-R-38 : Lift Station #13 Rehabilitation)

manufacturers. Project specific submittals should be provided including application, cure time, and surface preparation procedures that permit optimum bond strength with the epoxy coating.

B. Remove existing coatings prior to application of the new cementitious lining and/or epoxy coating. Applicator is to maintain strict adherence to all manufacturer's recommendations with regard to proper surface preparation and compatibility with existing coatings.

3.02 CEMENTITIOUS & EPOXY COATING MANUFACTURERS

A. Quadex, Inc., 1 Country Club Circle, Maumelle, AR (888)-831-1650 or (501) 803-9400 or FAX (501) 803- 9444, or ENGINEER approved equal.

B. Raven Lining Systems, Inc., Tulsa, Oklahoma (800)-324-2810 or (918)-584-2810 or FAX (918)-582-4311, or ENGINEER approved equal.

3.03 REPAIR MATERIALS

A. Patching and infiltration control repair materials shall be used to fill voids, structurally reinforce, and/or rebuild surfaces, etc. as determined necessary by the OWNER and CONTRACTOR. Repair materials must be compatible for use with the specified cement and/or epoxy system and shall be applied in accordance with the manufacturer's recommendations.

B. The following products may be accepted and approved as compatible repair and infiltration materials for use within the specifications:

1. Infiltration Control.

a. All fast setting infiltration control materials furnished shall be designed to be applied in dry powder form, with no prior mixing of water, directly to active leaks under hydrostatic pressure in manholes or related structures. Materials shall consist of rapid setting cements, siliceous aggregates, and various accelerating agents. Material shall not contain chlorides, gypsum, or metallic particles.

2. Invert Repair and Patching.

a. All material furnished shall be designed to fill voids and to repair or reconstruct where no hydrostatic pressure exists. Material shall consist of rapid setting cements, high density non-absorptive aggregates, and various accelerating agents. Material shall not contain chlorides, gypsum, or metallic particles.

Attachment: Holly Hill LS_13 Rehabilitation_Bid Set Specifications_04.30.19 (2019-R-38 : Lift Station #13 Rehabilitation)

3. Structural Cementitious Liner Material.

   a. Material shall consist of a one component, fiber reinforced, fused calcium aluminate mortar, enhanced with a high density, chemically stable monocrystalline quartz aggregate.

4. Epoxy Coating Material.

   a. Material shall consist of a 100 percent (100%) solid, solvent-free two (2)-component epoxy resin system that is thixotropic in nature and filled with select fillers to minimize permeability and provide sag resistance.

Product Type	Amine Cured Epoxy
Color	Light Blue
Solids Content (% volume)	100
Mix Ratio	Three to One (3:1)
Compressive Strength (psi)	18,000
Tensile Strength (psi)	7,600
Tensile Elongation (%)	One and a Half (1.5)
Flexural Strength (psi)	13,000
Hardness, Type D	88
Bond Strength – Concrete	>Tensile Strength of Concrete
Chemical Resistance	
Severe Municipal Sewer	All Types of Service

3.04 CEMENTITIOUS LINING APPLICATION EQUIPMENT

A. Only manufacturer approved low-velocity cementitious wet spray system shall be used in the application of the specified cementitious liner material. System shall consist of a batch style mixer, progressive cavity (rotor/stator) style mortar pump, and low-velocity spray nozzle. No gunite applications will be allowed.

Attachment: Holly Hill LS_13 Rehabilitation_Bid Set Specifications_04.30.19 (2019-R-38 : Lift Station #13 Rehabilitation)

3.05 EPOXY COATING APPLICATION EQUIPMENT

A. Only manufacturer approved heated plural component spray equipment shall be used in the application of the specified epoxy coating. No hand or brush application of the epoxy materials will be allowed.

PART 4 – EXECUTION

4.01 APPLICATOR QUALIFICATIONS

A. Repair material applicators shall be trained to properly apply the cementitious mortar according to manufacturer's recommendations.

B. All cementitious and epoxy materials must be applied by a Certified Applicator of the product manufacturer and according to manufacturer specifications.

4.02 SURFACE PREPARATION

A. Applicator shall inspect all specified surfaces prior to surface preparation. Applicator shall notify OWNER of any noticeable disparity in the surfaces that may interfere with the proper preparation or application of the specified repair materials.

B. Applicator personnel shall directly perform all aspects of surface preparation and shall not subcontract any element of surface preparation.

C. All contaminants including: oils, grease, incompatible existing coatings, waxes, form release, curing compounds, efflorescence, sealers, salts, or other contaminants shall be removed. All concrete or mortar that is not sound or has been damaged by chemical exposure shall be removed to a sound concrete surface or replaced.

D. Surface preparation method(s) should be based upon the conditions of the substrate, service environment and the requirements of the appropriate condition based repair method to be applied. Surfaces to receive repair materials shall be cleaned and abraded to produce a sound surface with adequate profile and porosity to provide a strong bond between the repair materials and the substrate.

E. Infiltration shall be stopped by using a material that is compatible with the appropriate and selected condition based repair method. <u>All costs associated with minor infiltration control shall be considered inclusive with the cost of the application of the appropriate cement and/or epoxy application</u>. Moderate to severe infiltration control may require the use of chemical injection grouting. If warranted, chemical injection grouting will involve a separate Payment item based of the contract unit price bid in the Itemized Proposal for each grouting application.

Attachment: Holly Hill LS_13 Rehabilitation_Bid Set Specifications_04.30.19 (2019-R-38 : Lift Station #13 Rehabilitation)

F. All surfaces shall be examined by the Inspector both during and after preparation and before the repair material is applied.

4.03 APPLICATION OF CEMENTITIOUS LINER MATERIAL

A. For each bag of product, use the amount of water required per manufacturer's recommendations following mixing procedures noted on product container and using the approved equipment for mixing and material application. The cementitious liner material will require only the addition of potable water during mixing. No other materials will be added during the mixing process without prior written consent from the material manufacturer.

B. Once materials have been mixed to an appropriate consistency, caution should be taken as to not over mix the mortar material.

C. The surface prior to application of the cementitious liner shall be clean and free of all foreign material and shall be damp without noticeable free water droplets or running water, but totally saturated just prior to application of the liner material. No application shall be made to a dry surface.

D. The material shall be spray applied in a consistent manner to create a minimum uniform thickness per appropriate surface area condition assessment.

E. Troweling of the liner material shall begin immediately following the spray voids in the manhole wall, and creating a relatively smooth finish on the surface of the liner material. Precautions should be taken not to overtrowell the material.

F. Immediately upon completion of the troweling phase, a wet-brush finish shall be applied to all surface areas of the cementitious liner material.

G. The cementitious liner material shall be cured in accordance with ACI recommendations. A water based curing compound may be used when necessary.

H. The liner material, once placed, shall have a minimum of eight (8) hours cure time before being subjected to active flow of surcharge.

I. In high traffic areas, the manhole should be barricaded and traffic withheld for a minimum of 12 hours after application is complete.

J. Caution should be taken to minimize exposure of applied product to sunlight and air movement. If application of additional materials is to be longer than 15 minutes, the structure shall be covered. At no time, should the finished product be exposed to sunlight or air movement for longer than 15 minutes before covering or closing access. In extremely hot and arid climates, the manhole shall be shaded while reconstruction is in process. In environments where humidity level is below

Attachment: Holly Hill LS_13 Rehabilitation_Bid Set Specifications_04.30.19 (2019-R-38 : Lift Station #13 Rehabilitation)

70 percent (70%), it shall be necessary to keep finished product damp for the first 72 hours.

K. No application shall be made to frozen surfaces or if freezing is expected to occur within the substrate within 24 hours after the application. Precautions shall be taken to keep the mix temperature at time of the application below 90°F. Mix water temperature shall not exceed 80°F. Mix water may be chilled with ice if necessary.

L. Payment will be made on the basis of the contract unit price bid in the Itemized Proposal for each square foot of cementitious build-back that is installed.

4.04 APPLICATION OF EPOXY COATING

A. Application procedures shall conform to the recommendations of the epoxy coating manufacturer, including material handling, mixing, and environmental controls during application, safety, and spray equipment.

B. The spray equipment shall be specifically designed to accurately ratio and apply the specified epoxy coating materials and shall be regularly maintained and in proper working order.

C. Testing for soundness of substrate: upon completion of initial surface preparation, Applicator shall make a visual examination of the surfaces that were prepared to identify areas requiring additional preparation. A screwdriver shall be used to scratch the surface. Should the screwdriver easily remove or dig into any portion of the surface, further preparation shall be required. Retest until a screwdriver cannot scratch the surface.

D. Testing for contaminants: a water drop test shall be used to test the surface for the presence of hydrophobic contaminants. Applicator shall place a drop of water on the surface in at least four representative locations in the manhole and its wetting behavior shall be observed. If the water droplet flattens out and "wets out" the surface, it is likely the surface is not contaminated. If the water droplet beads up and does not "wet out" the surface, it is likely the surface is contaminated. To remove hydrophobic contaminants the Applicator shall either add an epoxy coating manufacturer approved degreaser to the water blasting process and rewash the interior of the manhole, or utilize another process such as steam cleaning, sodium bicarbonate injection, or abrasive blasting for removal of the contaminants. If contaminants are found and removed, retest the contaminated areas using the water drop test until the contaminants are gone.

E. Ambient conditions: Applicator shall record air temperature inside the manhole and prevailing weather conditions at the time of coating application.

Attachment: Holly Hill LS_13 Rehabilitation_Bid Set Specifications_04.30.19 (2019-R-38 : Lift Station #13 Rehabilitation)

F. Specified and properly prepared surfaces shall be coated by roller or spray application of a moisture tolerant, solvent-free, 100 percent (100%) solid, epoxy primer as further described herein. Application shall cover all specified surfaces to a minimum dry film thickness of 150 mils.

G. During application, Applicator shall regularly perform and record epoxy coating thickness readings with a wet film thickness gage, such as those available through Paul N. Gardner Company, Inc. meeting ASTM D 4414 – Standard Practice for Measurement of Wet Film Thickness of Organic Coatings by Notched Gages, to ensure uniform thickness during application.

H. Top coating or additional coats of the epoxy coating should occur as soon as the prior coat becomes tack free, but no later than the recoat window for the specified products (24 hours). Additional surface preparation procedures will be required if this recoat window is exceeded.

I. Installation of the epoxy coating shall not commence until the concrete substrate has properly cured in accordance with these specifications.

J. Payment will be made on the basis of the contract unit price bid in the Itemized Proposal for each square foot of manhole epoxy application.

PART 5 – ANCILLARY LIFT STATION REPAIR ITEMS

5.01 BYPASS PUMPING

A. If warranted to facilitate any aspect of the manhole or lift station restoration process, the CONTRACTOR shall provide a bypass pumping system that is capable of handling a minimum flow of 1,000 GPM at 50 psi. The CONTRACTOR shall also provide a secondary or standby pump system that is capable of handling similar flows in the event that the primary pump system experiences flows greater than 1,000 GPM, or if the first pump fails. Both pumping units shall be provided with the following items: sound reduction compartments, floatation sensors, automatic dialers, and internal and external check valve assemblies.

B. Any requirement for bypass pumping shall be submitted by the CONTRACTOR to the ENGINEER for review and approval prior to commencement of actual sewer bypass. The ENGINEER shall have sole discretion in determining the necessity for any bypass pumping. No bypass pumping shall be executed without prior approval of the ENGINEER.

C. Payment will be made on the basis of the contract unit price bid in the Itemized Proposal for any specific structure that requires bypass pumping. Payments for manhole bypass pumping will be limited to one installment per manhole. Any subsequent or additionally required bypass pumping will be at the sole responsibility and expense of the CONTRACTOR.

Attachment: Holly Hill LS_13 Rehabilitation_Bid Set Specifications_04.30.19 (2019-R-38 : Lift Station #13 Rehabilitation)

PART 6 – INSPECTION AND PERFORMANCE TESTING

6.01 PROTECTIVE LINER INSPECTION

A. After the specified repair and rehabilitation work has been completed, the lift station shall be visually reviewed and tested by the CONTRACTOR in the presence of the OWNER. Visual review shall be for water tightness against leakage of water into the structure. All visible leaks and defects observed during the review shall be repaired to the OWNER's satisfaction. There shall be no visible infiltration.

6.02 PROTECTIVE LINER PERFORMANCE TESTING

A. In addition to the visual inspection, will be subjected to the following in-field performance testing requirements as a prerequisite for CONTRACTOR payment.

B. All equipment, materials, and work associated with the prescribed performance testing requirements shall be at the sole expense of the CONTRACTOR.

6.03 EPOXY COATING SPARK TESTING

A. The epoxy coating shall be tested using a holiday or spark test method to identify any pinholes or holidays that were not detected during the visual inspection.

B. The CONTRACTOR shall perform holiday detection on all surfaces coated with the epoxy coating in the presence of Inspector.

C. After the epoxy coating has set hard to the touch, surfaces shall first be dried; an induced holiday shall then be made on to the coated concrete surface and shall serve to determine the minimum/maximum voltage to be used to test the coating for holidays at that particular area.

D. The spark tester shall be initially set at 100 volts per one (1) mil (25 microns) of film thickness applied but may be adjusted as necessary to detect the induced holiday (ref. NACE RPO188-99).

E. All detected holidays shall be marked and repaired by abrading the coating surface with grit disk paper or other hand tooling method. After abrading and cleaning, additional epoxy coating material can be hand applied to the repair area. All touch-up/repair procedures shall follow the epoxy coating manufacturer's recommendations.

END OF SECTION

Attachment: Holly Hill LS_13 Rehabilitation_Bid Set Specifications_04.30.19 (2019-R-38 : Lift Station #13 Rehabilitation)

SECTION 33 30 00

SANITARY SEWER SYSTEMS

PART 1 – GENERAL

1.01 WORK INCLUDED

A. The work included under this section consists of furnishing all labor, equipment, and materials necessary for the construction of sanitary sewer, sewer connections, and appurtenances as shown on the drawings or specified herein.

B. Related Work Specified Elsewhere:

1. Section 31 23 00: Excavation, Backfill and Embankment.

2. Section 03 30 00: Cast-In-Place and Poured Concrete.

3. Section 03 40 00: Precast Concrete Structures.

1.02 SUBMITTALS

A. Shop drawing manufacturer's literature and other descriptive material of all equipment and materials shall be submitted in accordance with Section 01 33 23: Shop Drawings.

1. Precast manholes.

2. Manholes frames, covers, and other castings.

3. Catalog Data: Submit for pipe and fittings.

4. Manhole – Pipe Connections.

1.03 DAMAGE CONTROL – PVC PIPE

A. Transportation. Care shall be taken during transportation of the pipe that it is not cut, kinked or otherwise damaged.

B. Handling Pipe Lengths.

1. Ropes, fabric, or rubber protected slings and straps shall be used when handling pipe.

Attachment: Holly Hill LS_13 Rehabilitation_Bid Set Specifications_04.30.19 (2019-R-38 : Lift Station #13 Rehabilitation)

2. Chains, cables, or hooks inserted into the pipe ends shall not be used. Two (2) slings spread apart shall be used for lifting each length of pipe. Pipe or fittings shall not be dropped onto rocky or unprepared ground.

C. Storage. Pipes shall be stored on level ground, preferably turf or sand, free of sharp objects which could damage the pipe.

1. Stacking of the polyvinyl chloride pipe shall be limited to a height that will not cause excessive deformation of the bottom layers of pipes under anticipated temperature conditions.

2. Where necessary due to ground conditions the pipe shall be stored on wooden sleepers, spaces suitable and of such width as not to allow deformation of the pipe at the point of contact with the sleeper or between supports.

PART 2 – PRODUCTS

2.01 MATERIALS

A. Polyvinyl chloride pipes. Plastic gravity sewer pipe and fittings shall be unplasticized polyvinyl chloride (PVC) and conform to the requirements of ASTM Designation D 3034 or ASTM F 679, Type PSM, Class 12454-B or 12454-C, SDR-35 with elastomeric gasket joints. PVC pipe and fittings shall be as manufactured by Johns-Mansville, Certainteed, H&W Industries, or equal.

B. Plastic (PVC) sewer fittings shall conform to the requirements of ASTM D 3034 standard with minimum wall thickness of SDR 35. Fittings eight-inch (8") and smaller shall be molded in one (1) piece with gasket joints that are of a molded "locked in" design to prevent loss during transport or "fish mouthing" during pipe insertion. The minimum socket depths shall comply with ASTM D 3034. Fittings 10 inch (10") and larger shall be molded or fabricated in accordance with manufacturers standard pipe bells and gaskets. Gaskets shall have minimum cross sectional area of 0.20 square inch and conform to ASTM F 0477 standard. PVC material shall have a cell classification of 12364-B or C as defined in ASTM D 1784. All fittings shall be supplied by one manufacturer and shall comply with the following additional ASTM standards: ASTM F 1336, ASTM D 3212, and ASTM F 913. All PVC fittings must be certified by CSA to the CSA B182.1 and CSA B182.2 standards as third party certification.

C. Where indicated on the drawings large diameter PVC may be used conforming to the requirements of AWWA C-905.

Attachment: Holly Hill LS_13 Rehabilitation_Bid Set Specifications_04.30.19 (2019-R-38 : Lift Station #13 Rehabilitation)

D. Ductile iron pipe.

1. Ductile iron sewer pipe shall conform to the requirements of ANSI Standard A21.51, Class 50. Pipe shall be epoxy lined as specified herein. Bituminous coating shall be applied to the outside of pipe as specified in ANSI Standard A21.51. Joints shall be mechanical or push-on and conform to ANSI A21.11. Gaskets shall be of neoprene and shall have plain tips unless otherwise specified.

2. Pipe lining shall be epoxy as specified in Section 09 91 00: Painting.

E. Concrete and reinforcing steel. Concrete and reinforcing steel shall conform to the requirements of Division 3 of these specifications. Concrete classes for the various purposes shall be as follows:

1. Manhole bottoms: Class "A".

2. Pipe and riser encasement: Class "B".

3. Protective slabs: Class "B".

F. Castings. Gray iron castings for manhole frames, covers and other items shall conform to the ASTM Designation A 48, Class 30, and shall be U.S. Foundry and Manufacturing Corp., or equal. Castings shall be true and pattern in form and dimensions and free of pouring faults and other defects in positions which would impair their strength, or otherwise make them unfit for the service intended. The seating between frames and covers shall be machined to fit true. No plugging or filling will be allowed. Lifting or "pick" holes shall be provided, but shall not penetrate the cover. Casting patterns shall conform to those shown on the drawings. All manhole frames and covers shall be traffic bearing unless otherwise specified. Frames shall be suitable for the future addition of cast iron rings for upward adjustment of top elevation. Frame and cover shall have machined edges along with rubber gaskets for water-resistant closure.

G. Manholes. Refer to Section 33 05 60: Manholes.

H. Terminal manholes. Manhole frames and covers shall provide a clear opening equal to the connecting pipe and shall be round, solid lid, Neeah No. R-1974-A, or equal. Covers shall be marked "SANITARY".

I. Brick. Brick for manhole construction shall be dense, hard burned, shale or clay brick conforming to ASTM Designation C 32, Grade MS.

Attachment: Holly Hill LS_13 Rehabilitation_Bid Set Specifications_04.30.19 (2019-R-38 : Lift Station #13 Rehabilitation)

J. Cement mortar. Cement mortar for manhole construction shall be as specified in ASTM Designation C 270, Type M, except the cement shall be Portland Type II. No mortars that have stood for more than one (1) hour shall be used.

K. Miscellaneous materials. Additional items of construction such as cleanouts, special manholes and other items necessary for the complete installation of the system shall conform to specific details on the drawings and shall be constructed of first-class materials conforming to the applicable portions of these specifications.

L. Pipe connections. All opening for pipes in manholes shall be sealed watertight by Kor-N-Seal, Link Seal or equal.

PART 3 – EXECUTION

3.01 PREPARATION

A. Upon satisfactory excavation of the pipe trench, as specified in Section 31 23 00: Excavating, Backfilling and Compacting, a continuous trough for the pipe barrel and recesses for the pipe bells shall be excavated by hand digging so that, when the pipe is laid in the trench, true to line and grade, the pipe and barrel will receive continuous uniform support and the bell will receive no pressure from the trench bottom.

B. The interior of all pipe shall be thoroughly cleaned of all foreign material before being lowered in the trench and shall be kept clean during laying operations by means of plugs, other approved methods.

3.02 INSTALLATION

A. Sewer pipe.

1. General.

a. Pipe laying shall proceed upgrade with spigot ends pointing in the direction of flow. Before pipe is joined, gaskets shall be cleaned of all dirt and stones and other foreign material. The spigot ends of the pipe and/or pipe gaskets shall be lubricated lightly with a lubricant as specified by the pipe manufacturer and approved by the ENGINEER. Sufficient pressure shall be applied to the pipe so as to properly seat the socket into the bell of the pipe. All pipes shall be laid straight, true to the lines and grades shown on the drawings in each manhole section.

b. Any pipe which is disturbed or found to be defective after laying shall be taken up and relaid or replaced.

Attachment: Holly Hill LS_13 Rehabilitation_Bid Set Specifications_04.30.19 (2019-R-38 : Lift Station #13 Rehabilitation)

c. Approved utility crossing signs shall be placed on the pipe alignment at each side of a waterway crossing.

2. PVC Pipe.

a. Handling pipeline. The handling of the joined pipe line shall be in such a manner that the pipe is not damaged by dragging it over sharp and cutting objects. Section of the pipes with deep cuts and gouges shall be removed.

b. Lowering pipe into trench. Care shall be exercised when lowering pipe into the trench to prevent damage to or twisting of the pipe.

c. Special precautions. PVC pipe connected to heavy fittings, manholes and rigid structures shall be supported in such a manner that no subsequent relative movement between the pipe and the joint with the rigid structures is possible.

B. Service Connections.

1. Service connections, of the type called for on the drawings, shall be provided in accordance with the details as shown or indicated on the drawings.

2. Where called for on the drawings, sewer pipe of the size and type noted shall be extended above grade and plugged with an approved removable plastic plug. All connections and changes of direction shall be made using standard fittings designed for the purpose.

3. Where no curb exists, or is planned, locations shall be adequately marked by a method approved by the OWNER.

C. Concrete encasement. Class B concrete encasement shall be constructed in accordance with the details shown on the drawings. Encasement shall be constructed where:

1. The sewer or service crosses over, or at a depth which provides less than 18 inches (18") clear distance between pipes when crossing under potable water mains. Encasement shall extend a minimum of 10 feet (10') of each side of the point of crossing. In lieu of encasement, the sewer line may be constructed of ductile iron pipe and shall be laid such that both joints will be at least 10 feet (10') from the crossing.

2. The OWNER shall order the line encased:

a. If, through failure to provide suitable trench sheeting, or other causes, the maximum width for trench excavations, as specified

Attachment: Holly Hill LS_13 Rehabilitation_Bid Set Specifications_04.30.19 (2019-R-38 : Lift Station #13 Rehabilitation)

elsewhere in these specifications, is exceeded, the CONTRACTOR shall construct concrete encasement around the pipe for the length of the excessive excavation. No payment will be made for the concrete encasement required due to excessive trench widths.

b. The points of beginning and ending of sewer, or service pipe encasement shall be not more than six inches (6") from a pipe joint to protect the pipe from cracking due to uneven settlement of its foundation or the effects of superimposed live loads.

D. Concrete protective slabs. Concrete protective slabs as shown on the drawings shall be constructed over gravity sewers that have less than three feet (3') of cover from finish grade.

E. Manholes.

1. General. Where shown on the drawings, the CONTRACTOR shall place stub-outs for future extensions. Both the manhole and exterior ends of all such stub-outs shall be closed with watertight plugs removable without damage to the pipe. One (1) section of pipe as shown on the plans shall be laid at each manhole stub-out.

a. Outside drop connections shall be made in accordance with the details therefore shown on the drawings.

b. The invert channels shall be smooth and accurately shaped to a semicircular bottom conforming to the inside of the adjacent sewer section. Steep slopes outside the invert channels shall be avoided. Changes in size and grade shall be made gradually and evenly. Changes in the direction of the sewer or entering branch shall be a smooth curve with radius as long as practicable. Invert channels shall also be formed for pipe stub-outs.

c. Prior to backfilling, each manhole/wetwell section joint shall be wrapped with “EZ-Wrap” butyl adhesive tape as manufactured by Press-Seal Gasket Corp, Concrete Supply Products Co., Fort Wayne, IN. Installation shall be in accordance with the manufacturers’ written instructions and shall include the use of “EZ-Stik” #4 primer prior to application of adhesive tape. This requirement is in addition to the use of “Ram-Neck” sealant at each joint.

d. The interior and exterior surfaces of all manholes shall be coated prior to installation in accordance with Section 33 05 60. Upon installation, inside coating will be touched up.

e. Frames and covers shall be set accurately to grade to conform to the finished grade of the adjacent areas or final road wearing surface grade. All covers shall be watertight.

Attachment: Holly Hill LS_13 Rehabilitation_Bid Set Specifications_04.30.19 (2019-R-38 : Lift Station #13 Rehabilitation)

f. Manholes shall be completed as the work progresses so that testing as prescribed in paragraph 3.03 may be completed.

2. Manholes, precast concrete:

a. Precast manholes shall conform to the requirements of Section 33 05 60: Manholes.

b. Precast manholes tops, shall terminate at such elevations as will permit laying up brick courses under the manhole frames to make allowance for future street grade adjustments. (See plan details.)

c. Drop connections, where required on precast manholes, shall be manufactured with the manhole elements at the casting yard. The manufacturer shall submit for approval the method of drop manhole construction.

d. The first pipe joint outside the manhole shall be located a maximum distance of three feet (3') from the outside surface of the manhole base slab.

e. Where additional pipe connections or modifications of existing factory made openings are required on new or existing precast concrete manholes, penetrations shall be by coring and installation of Kor-N-Seal or Link Seal. If this method is not deemed feasible by the OWNER's representative, all cutting relative to the manhole shall be performed only by a power driven abrasive wheel or saw. It is specifically noted that such alternate connections to existing manholes shall be installed in accordance with the details for new units shown on the drawings, and shall be caulked water tight with non-shrinking grout.

F. Connections to existing structures and sewers. Proposed sewer lines shall be connected to existing manholes and pipe stubs.

3.03 FIELD QUALITY CONTROL

A. Workmanship. It is imperative that all sewers and appurtenances be built practically watertight and that the CONTRACTOR adheres rigidly to the specifications for materials and workmanship. Upon completion, the sewers, or sections thereof, will be tested and gauged and if leakage is above the allowable limits specified, the sewer will be rejected.

B. Inspection. On completion of each block or section of sewer, or such other times as the OWNER may direct the block or section of sewer shall be cleaned, tested, and inspected.

1. Each section of the sewer shall show, on examination from either end, a full circle of light between manholes.

Attachment: Holly Hill LS_13 Rehabilitation_Bid Set Specifications_04.30.19 (2019-R-38 : Lift Station #13 Rehabilitation)

2. Each manhole or other appurtenances to the system shall be of the specified size and form, be watertight (no leakage allowed by visual inspection), neatly and substantially constructed, with the top set permanently to exact position and grade. All repairs shown necessary by the inspection shall be made; broken or cracked pipe replaced; all deposits removed and the sewer left true to line and grade, entirely clean, and ready for use.

3. After the final backfill has been in place at least 30 days, polyvinyl chloride (PVC) pipe shall be tested for defection and deformation by pulling a mandrel through the entire length of the pipe. The mandrel shall have a diameter equal to 95 percent (95%) of the inside diameter of the pipe. Any pipe found to be deformed and/or deflected in excess of five percent (5%) of the nominal diameter of the pipe shall be removed and replaced with new pipe at no additional cost to the OWNER. Results of the tests shall be submitted to the OWNER and ENGINEER, in a report format approved by the Design ENGINEER. The cost of this service shall be included in the unit price bid for the particular item to which it is related.

4. Prior to final acceptance, the CONTRACTOR shall provide an acceptable video tape and log of all gravity sewer lines placed. Any bad joints or leakage visible on the tapes shall be corrected by the CONTRACTOR prior to final acceptance and payment by the OWNER.

C. Infiltration/Exfiltration Testing.

1. After completion of gravity sewer installation, all sections of pipe shall be infiltration or exfiltration tested. When groundwater is four feet (4') or more above the top of the pipe, an infiltration test will be performed. Any leakage shall be measured by a V-notch weir or similar flow measuring device. Allowable leakage is 50 gallons per day/inch diameter of pipe/mile of pipe length being tested. If groundwater is not at least four feet (4') above the top of the pipe, an exfiltration test is required. This is to be performed by plugging the manhole at the lower end of the section and filling it with water. Water depth or head of water on the section of pipe to be tested shall be four feet (4') or, if four feet (4') of head cannot be provided, to the top of the highest constraint diameter manhole section. Allowable exfiltration leakage is 50 gallons per day/inch diameter of pipe/mile of pipe length being tested. If leakage exceeds the maximum allowed, the leak must be located and repaired.

END OF SECTION

Attachment: Holly Hill LS_13 Rehabilitation_Bid Set Specifications_04.30.19 (2019-R-38 : Lift Station #13 Rehabilitation)

SECTION 33 31 00

SEWER BYPASS PUMPING

PART – GENERAL

1.01 DESCRIPTION OF WORK

A. The work covered by this section consists of providing all labor, equipment, material, and supplies and performing all operations required to bypass pump sewage around a manhole or sewer section in which work is to be performed. The CONTRACTOR shall be prepared to bypass pump sewage as part of his operations. The CONTRACTOR shall provide all pumps, piping and other equipment necessary to accomplish bypass pumping; perform all construction; obtain all permits; pay all costs; and perform complete restoration of all existing facilities to conditions equal or better than existed prior to construction and to the satisfaction of the ENGINEER. All costs to accomplish bypass pumping, at the required volume, and all associated work including restoration, shall be considered incidental to the work and no additional compensation will be allowed.

1.02 GENERAL

A. When the depth of flow in the sewer line being televised or repaired is above the maximum allowable for the proposed work, then the CONTRACTOR shall reduce the flow to the level shown below by manual operation of pump stations, plugging or blocking of the flow or by pumping and bypassing of the flow as acceptable to the ENGINEER. For manual operation of pump stations, the CONTRACTOR shall coordinate such operations with the appropriate City personnel. Plugging or blocking of the flow shall only be allowed when the CONTRACTOR can demonstrate that the upstream gravity collection system can accommodate the surcharging without any adverse impact.

B. The depth of flow in the sewer line being televised or repaired shall not exceed that shown for the respective pipe sizes and for the operations indicated.

C. Initial Television Inspection. For the initial television inspection, the sewer line shall be blocked completely. No flow, except infiltration, will be allowed through the sewer line.

D. Television Inspection Before and After Lining Installation. For the television inspection before and after lining installation the sewer line shall be blocked completely. No flow, except infiltration before lining, will be allowed through the sewer line.

Attachment: Holly Hill LS_13 Rehabilitation_Bid Set Specifications_04.30.19 (2019-R-38 : Lift Station #13 Rehabilitation)

E. Other Television Inspection, including Warranty.

Pipe Size	Maximum Depth of Flow
6" – 10" Pipe	20 Percent (20%) of Pipe Diameter
12" – 24" Pipe	25 Percent (25%) of Pipe Diameter
Above 24" Pipe	30 Percent (30%) of Pipe Diameter

F. Television Inspection After Joint Testing/Sealing. For the television inspection after joint testing/sealing the sewer line shall be blocked completely. No flow will be allowed through the sewer line.

G. Joint Testing/Sealing

Pipe Size	Maximum Depth of Flow
6" – 10" Pipe	20 Percent (20%) of Pipe Diameter
12" – 24" Pipe	30 Percent (30%) of Pipe Diameter
Above 24" Pipe	35 Percent (35%) of Pipe Diameter

H. Pipe Lining Installation. For the pipe lining installation, the sewer line shall be blocked completely. No flow, except infiltration, will be allowed through the sewer line.

I. Manhole Repairs. For manhole repairs, the flow through the manhole shall be controlled or blocked completely, as required, to properly complete the repairs as specified.

1.03 SUBMITTALS

The CONTRACTOR shall submit a written plan describing his means and methods for flow control and bypass pumping to the ENGINEER for review.

PART 2 – PRODUCTS (NOT USED)

PART 3 – EXECUTION

3.01 PLUGGING AND BLOCKING

A. A sewer line plug shall be inserted into the line upstream of the section being televised or repaired. The plug shall be so designed that all or any portion of the upstream flow can be released. During the television inspections and repair operations the flow through the line being worked shall be reduced to within the

Attachment: Holly Hill LS_13 Rehabilitation_Bid Set Specifications_04.30.19 (2019-R-38 : Lift Station #13 Rehabilitation)

maximum limits stated above. After the work has been completed, the flow shall be restored to normal.

3.02 PUMPING AND BYPASSING

A. When pumping and bypass pumping is required, as determined by the ENGINEER, the CONTRACTOR shall supply all necessary pumps, conduits, and other equipment to divert the flow around manhole section in which work is to be performed. The bypass system shall be of sufficient capacity to handle existing flow plus additional flow that may occur during rainstorm events. The CONTRACTOR will be responsible for furnishing the necessary labor and supervision to set up and operate the pumping and bypassing system. Pumps and equipment shall be continuously monitored by the CONTRACTOR during the periods that pumping and bypassing are required. If pumping is required on a 24-hour basis, engine shall be equipped in a manner to keep noise to a minimum.

3.03 FLOW CONTROL PRECAUTIONS

A. When flow in a sewer line is plugged, blocked or bypassed by the CONTRACTOR, he shall take sufficient precautions to protect the public health and to protect the sewer lines from damage that might result from sewer surcharging, Further, the CONTRACTOR shall take precautions to insure that sewer flow control operations do not cause flooding or damage to public or private property being served by the sewers involved and he shall be responsible for any damage resulting from his flow control operations.

B. When flow in a sewer line is plugged or blocked by the CONTRACTOR, he shall monitor the conditions upstream of the plug and shall be prepared to immediately start bypass pumping, if needed. Any liquid or solid matter which is bypass pumped from the sewer collection system shall be discharged to another sewer manhole or appropriate vehicle or container only. No such liquid or solid matter shall be allowed to be discharged, stored, or deposited on the ground, swale, road, stormwater drainage system or open environment. The CONTRACTOR shall protect all pumps, conduit and other equipment used for bypass pumping from traffic.

C. Should the liquid or solid matter from the sewer collection system be spilled, discharged, leaked, or otherwise deposited to the open environment as a result of the CONTRACTOR's flow control operations, he shall be responsible for all cleanup and disinfection of the affected area and all costs associated with same. The CONTRACTOR shall also be responsible for notifying the sewer system operating personnel and appropriate regulatory agencies and performing all required cleanup operations at no additional cost to the OWNER.

END OF SECTION

Attachment: Holly Hill LS_13 Rehabilitation_Bid Set Specifications_04.30.19 (2019-R-38 : Lift Station #13 Rehabilitation)

SECTION 33 32 20

COLLECTION SYSTEM SUBMERSIBLE PUMPS

PART 1 – GENERAL

1.01 WORK INCLUDED

A. The work included under this Section consists of furnishing submersible pumps, motors, and related equipment for the pump station as shown on the Drawings and specified herein. The station shall be fully tested, complete and in operating condition.

1.02 QUALITY ASSURANCE

A. Unit Integrity: The pumps, motors, lifting chains, and guide bars shall be supplied by the pump supplier to ensure unit integrity.

B. Pump Tests: The pump supplier shall perform the following tests on each pump before shipment from the supplier:

1. Megger the pump for insulation breaks or moisture.

2. Prior to submergence, the pump shall be run dry and be checked for correct rotation.

3. Pump shall be run in a submerged condition.

4. Pump shall be removed from test tank and meggered immediately for moisture.

5. A written certified test report giving the above information shall be supplied with each pump at the time of shipment.

6. All end of pump chains will then be fitted with a rubber shrink fit boot to protect chains prior to electrical installation.

C. Guaranteed Parts Stock Program: The pump supplier shall have a guaranteed parts stock program in the State of Florida. These parts shall include at least one (1) set of spare parts as listed below for each pump supplied on this contract. If the pump supplier does not have a published guaranteed part stock program, the CONTRACTOR shall furnish the specified spare parts for each pump.

Attachment: Holly Hill LS_13 Rehabilitation_Bid Set Specifications_04.30.19 (2019-R-38 : Lift Station #13 Rehabilitation)

Upper Mechanical Seal
Lower Mechanical Seal
Wear Rings
Motor Cable
Cable Entry Washer/Grommet
Complete Set of O - Rings
Inspection Plug Washers
Impeller Bolt
Impeller Key
Upper Bearing
Lower Bearing

1.03 SUBMITTALS

A. Shop Drawings: The CONTRACTOR shall submit detailed and dimensioned working shop drawings showing the construction of the proposed facility and installation of all equipment complete in every respect. Each drawing shall be indexed and/or referenced to the Contract Drawings and Specifications. No work upon the manufacture or fabrication of any equipment shall be performed until the ENGINEER's approval has been obtained. The CONTRACTOR shall submit, with the certified pump shop drawings, layout drawings showing exact installation, piping and foundation details for the pumping units being submitted.

1.04 WARRANTY

A. The pump manufacturer shall provide a prorated warranty against defects in workmanship and materials for a period of five (5) years under normal use, operation, and service. The warranty shall be in published form and apply to all similar units.

PART 2 – PRODUCTS

2.01 MATERIALS

A. The pump manufacturer shall provide a prorated warranty against defects in workmanship and materials for a period of five (5) years under normal use, operation, and service. The warranty shall be in published form and apply to all similar units.

Attachment: Holly Hill LS_13 Rehabilitation_Bid Set Specifications_04.30.19 (2019-R-38 : Lift Station #13 Rehabilitation)

2.02 PUMPS

A. The supplier shall furnish and install motor driven, totally submersible sewage pumps which meet the following requirements. Pumps shall be manufactured by ABS, or equal, as pre-approved by the design engineer of the lift station.

Lift Station #13	
Pumps Required	Two (2)
ABS Model	XFP 100C – CB1
Design Point GPM	180
Head Feet	17 feet (17')
Impeller Dia.	195 mm
Motor HP Required	2.68
Speed	1,165
Voltage	230
Phase	One (1)
Frequency Hertz	60

B. Pump Design: The heavy duty submersible wastewater pump(s) shall be capable of handling raw unscreened sewage, storm water, and other similar solids-laden fluids without clogging. The pump shall be driven by a **Premium Efficiency Motor**, providing the highest levels of operational reliability and energy efficiency.

GUIDE RAIL BASE ASSEMBLY (wet pit installation)

There shall be no need for personnel to enter the wet well to remove or reinstall the pump(s). In a wet pit installation, the discharge base & elbow assembly shall be permanently installed in the wet well and connected to the discharge piping. In order to prevent binding or separation of the pump from the guide rail system, the pump(s) shall connect to the guide rail base automatically and firmly, guided by two (2) two-inch (2") guide pipe extending from the base elbow to the top of the station. Systems using guide cable in lieu of rigid guide bars or pipes shall not be considered acceptable. The sliding guide bracket shall be a separate part of the pumping unit, capable of being attached to standard six inch (6") ANSI class 125 or metric DN150 pump flanges, so that the pump mounting is non-proprietary, and any pump with a standard discharge flange can be mounted on the base assembly. Base or bracket

Attachment: Holly Hill LS_13 Rehabilitation_Bid Set Specifications_04.30.19 (2019-R-38 : Lift Station #13 Rehabilitation)

assemblies with proprietary or non-standard flange dimensions shall not be considered acceptable.

A field replaceable Nitrile (Buna-N) rubber profile gasket or O-ring shall accomplish positive sealing of the pump flange/guide rail bracket to the discharge elbow. Base assemblies which rely solely on metal to metal contact between the pump flange and discharge base elbow as a means of sealing are inherently leak prone, and shall not be equal. No portion of the pump shall bear directly on the floor of the sump. The guide rail system shall be available in an optional non-sparking version, approved by Factory Mutual for use in NEC Class 1, Division 1, Group C&D hazardous locations.

C. Pump Construction:

1. Major pump components shall be of gray cast iron, EN-GJL-250 (ASTM A-48, Class 35B) with smooth surfaces devoid of porosity or other irregularities. All exposed fasteners shall be stainless steel 1.4401 (AISI type 316) construction. All metal surfaces coming into contact with the pumped media (other than the stainless steel components) shall be protected by a factory applied spray coating of zinc phosphate primer followed by a high solids two (2) part epoxy paint finish on the exterior of the pump. The pump shall be equipped with an open lifting hoop suitable for attachment of standard chain fittings, or for hooking from the wet well surface. The hoop shall be stainless steel 1.4401 (AISI 316), and shall be rated to lift a minimum of four times (4x) the pump weight.

   Sealing design for the pump/motor assembly shall incorporate machined surfaces fitted with Nitrile (Buna-N) rubber O-rings. Sealing will be the result of controlled compression of rubber O-rings in two (2) planes of the sealing interface. Housing interfaces shall meet with metal to metal contact between machined surfaces, and sealing shall be accomplished without requiring a specific torque on the securing fasteners. Rectangular cross sectioned gaskets requiring specific torque limits to achieve compression shall not be considered equal. No secondary sealing compounds shall be required or used.

2. Impeller: The ABS ContraBlock Plus impeller shall be of gray cast iron, EN-GJL-250 (ASTM A-48, Class 35B). The impeller shall be of the semi-open, non-clogging, single vane design, meeting the Ten State Standards requirement for minimum solids passage size of three inches (3"). The impeller shall be capable of passing a minimum of 3.9 inch (3.9") diameter spherical solids as are commonly found in waste water. The impeller shall have a slip fit onto the motor shaft and drive key, and shall be securely fastened to the shaft by a stainless steel bolt which is mechanically prevented from loosening by a positively engaged ratcheting washer assembly. The head of the impeller bolt shall be effectively recessed within the impeller bore

Attachment: Holly Hill LS_13 Rehabilitation_Bid Set Specifications_04.30.19 (2019-R-38 : Lift Station #13 Rehabilitation)

to prevent disruption of the flow stream and loss of hydraulic efficiency. The impeller shall be dynamically balanced to the ISO 10816 standard to provide smooth vibration free operation. Impeller designs which do not meet the Ten State Standards requirement for three inch (3") solids passage size, those that rely on retractable impeller designs to pass three inch (3") solids, or those that rely on fins or pins protruding into the suction path to assist in the handling of fibrous material shall not be considered equal.

3. Self-Cleaning Wear Plate: The ABS ContraBlock Plus wear plate shall be constructed from gray cast iron, EN-GJL-250 (ASTM A-48, Class 35B). The wear plate shall be designed with an inlet incorporating strategically placed cutting grooves and an outward spiral V-shaped groove on the side facing the impeller, to shred and force stringy solids outward from the impeller and through the pump discharge. The wear plate shall be mounted to the volute with three (3) stainless steel securing screws and three (3) stainless steel adjusting screws to permit close tolerance adjustment between the wear plate and impeller for maximum pump efficiency. The wear plate shall be factory mounted to the volute in a fixed position with metal to metal contact on machined surfaces to insure optimal clearance and efficiency at startup. Future adjustments shall be easily accomplished by removing three (3) securing screws and rotating the plate 45 degrees (45°) to the adjustment position. Adjustment to allow for wear and restore peak pumping performance shall then be accomplished using standard tools, and without requiring disassembly of the pump. The use of fixed or non-adjustable wear plates or rings, or systems that require disassembly of the pump or shimming of the impeller to facilitate adjustment shall not be considered equal. The suction flange shall be integrated into the wear plate and its bolt holes shall be drilled and threaded to accept standard six inch (6") ANSI class 125 flanged fittings.

4. Pump Volute: The pump volute shall be single piece gray cast iron, EN-GJL-250 (ASTM A-48, Class 35B) non-concentric design with centerline discharge. Passages shall be smooth and large enough to pass any solids which may enter the impeller. Discharge size shall be as specified on the pump performance curve. The discharge flange design shall permit attachment to standard ANSI or metric flanges/appurtenances. The discharge flange shall be slotted to accept both six inch (6") ANSI class 125 and metric DN150 (PN 10) metric flanged fittings. Proprietary or non-standard flange dimensions shall not be considered acceptable. The minimum working pressure of the volute and pump assembly shall be 10 bar (145 psi).

D. PREMIUM EFFICIENCY MOTOR

The Premium Efficiency motor shall meet efficiency standards in accordance with IEC 60034-30, level IE3 and NEMA Premium*. Motor rating tests shall be

Attachment: Holly Hill LS_13 Rehabilitation_Bid Set Specifications_04.30.19 (2019-R-38 : Lift Station #13 Rehabilitation)

conducted in accordance with IEC 60034-2-1 requirements and shall be certified accurate and correct by a third party certifying agency. A certificate shall be available upon request.

* IE3 and NEMA Premium efficiency levels are equivalent, however the NEMA Premium standard is intended to cover dry installed motors only, not integrated submersible motors.

The Premium Efficiency motor shall be housed in a water tight gray cast iron, EN-GJL-250 (ASTM A-48, Class 35B) enclosure capable of continuous submerged operation underwater to a depth of 20 meters [65 feet (65')], and shall have an IP68 protection rating. The motor shall be of the squirrel-cage induction design, NEMA type B, Premium Efficiency. The copper stator windings shall be insulated with moisture resistant Class H insulation materials, rated for 18°C (356°F). The stator shall be press fitted into the stator housing. The use of bolts, pins or other fastening devices requiring penetration of the stator housing is unacceptable. The rotor bars and short circuit rings shall be made of cast aluminum.

The motor shall be designed for continuous duty. The maximum continuous temperature of the pumped liquid shall be 40°C (104°F), and intermittently up to 50°C (122°F). The motor shall be capable of handling up to 12 evenly spaced starts per hour without overheating. The service factor (as defined by the NEMA MG1 standard) shall be **1.3**. The motor shall have a voltage tolerance of plus or minus 10 percent (±10%) from nominal, and a phase to phase voltage imbalance tolerance of one percent (1%). The motor shall be FM and CSA approved for use in NEC Class I, Division I, Groups C & D hazardous locations. The surface temperature rating shall be T3C.

For submerged (wet pit) applications, the motor shall be self-cooling via the process fluid surrounding the motor. For unsubmerged (dry pit) applications, an integrated oil cooling system shall be utilized to enhance heat transfer, and allow the motor to operate at full rated power continuously without the need for de-rating or reduced duty cycle. No external coolant supply or external cooling jacket shall be required for dry pit applications. The motor shall have a NEMA Class A temperature rise for submerged service, and class B rise for dry pit service, providing cool operation under all operating conditions.

1. Thermal Protection: Each phase of the motor shall contain a normally closed bi-metallic temperature monitor switch imbedded in the motor windings. These thermal switches shall be connected in series and set to open at 140°C (284°F) plus or minus five degrees (±5°C). They shall be connected to the control panel, and used in conjunction with, and supplemental to, external motor overload.

Attachment: Holly Hill LS_13 Rehabilitation_Bid Set Specifications_04.30.19 (2019-R-38 : Lift Station #13 Rehabilitation)

2. Mechanical Seals: Each pump shall be equipped with a tandem mechanical shaft seal system consisting of two (2) totally independent seal assemblies. The seals shall operate in a lubricant reservoir that hydro-dynamically lubricates the lapped seal faces at a constant rate. The lower, primary seal unit, located between the pump and the lubricant chamber, shall contain one (1) stationary industrial duty **silicon-carbide** seal ring and one (1) rotating industrial duty **silicon-carbide** seal ring. The stationary ring of the primary seal shall be installed in a seal holding plate of gray cast iron EN-GJL-250 (ASTM A-48, Class 35B). The seal holding plate shall be equipped with swirl disruption ribs to prevent abrasive material from prematurely wearing the seal plate. The upper, secondary seal unit, located between the lubricant chamber and motor housing, shall contain one (1) stationary industrial duty **silicon-carbide** seal ring, and one (1) rotating industrial duty **silicon-carbide** seal ring. Each seal interface shall be held in contact by its own spring system. The seals shall not require routine maintenance, or adjustment, and shall not be dependent on the direction of rotation for proper sealing. Each pump shall be provided with a lubricant chamber for the shaft sealing system which shall provide superior heat transfer and maximum seal cooling. The lubricant chamber shall be designed to prevent overfilling, and to provide lubricant expansion capacity. The drain and inspection plug shall have a positive anti-leak seal, and shall be easily accessible from the outside of the pump. The seal system shall not rely upon the pumped media for lubrication and shall not be damaged when the pump is run dry. Lubricant in the chamber shall be environmentally safe non-toxic material.

   The following seal types shall not be considered equal: Seals of proprietary design, or seals manufactured by other than major independent seal manufacturing companies. Seals requiring set screws, pins, or other mechanical locking devices to hold the seal in place, conventional double mechanical seals containing either a common single or double spring acting between the upper and lower seal faces, any system requiring a pressure differential to seat the seal and ensure sealing.

3. Mechanical Seal Protection System: The primary mechanical seal shall be protected from interference by particles in the waste water, including fibrous materials, by an active Seal Protection System integrated into the impeller. The back side of the impeller shall be equipped with a sinusoidal cutting ring, forming a close clearance cutting system with the lower submersible motor housing or seal plate. This sinusoidal cutting ring shall spin with the pump impeller providing a minimum of 75 shearing actions per pump revolution. Large particles or fibrous material which attempt to lodge behind the impeller, or wrap around the mechanical seal shall be effectively sheared by the active cutting system into particles small enough the prevent interference with the mechanical seal. The Seal Protection System shall operate whenever the pump operates, and shall not require adjustment or maintenance in order

Attachment: Holly Hill LS_13 Rehabilitation_Bid Set Specifications_04.30.19 (2019-R-38 : Lift Station #13 Rehabilitation)

to function. Submersible pump designs which do not incorporate an active cutting system to protect the primary mechanical seal shall not be considered acceptable for wastewater service.

4. Seal Failure Early Warning System: The integrity of the mechanical seal system shall be continuously monitored during pump operation and standby time. An electrical probe shall be provided in a sensing chamber positioned between the primary and secondary mechanical seals for detecting the presence of water contamination within the chamber. The sensing chamber shall be filled with environmentally safe non-toxic oil. A solid-state relay mounted in the pump control panel or in a separate enclosure shall send a low voltage, low amperage signal to the probe, continuously monitoring the conductivity of the liquid in the sensing chamber. If sufficient water enters the sensing chamber through the primary mechanical seal, the probe shall sense the increase in conductivity and signal the solid state relay in the control panel. The relay shall then energize a warning light on the control panel, or optionally, cause the pump shut down. This system shall provide an early warning of mechanical seal leakage, thereby preventing damage to the submersible pump, and allowing scheduled rather than emergency maintenance. Systems utilizing float switches or any other monitoring devices located in the stator housing rather than in a sensing chamber between the mechanical seals are not considered to be early warning systems, and shall not be considered equal.

5. Shaft: The pump shaft and motor shaft shall be an integral, one (1) piece unit adequately designed to meet the maximum torque required at any normal start-up condition or operating point in the system. The shaft shall have a full shutoff head design safety factor of 1.7, and the maximum shaft deflection shall not exceed 0.05 mm [0.002 inch (0.002")] at the lower seal during normal pump operation. Each shaft shall be stainless steel 1.4021 (AISI 420) material, and shall have a polished finish with accurately machined shoulders to accommodate bearings, seals, and impeller. Carbon steel, chrome plated, or multi piece welded shafts shall not be considered adequate or equal.

6. Bearings: Each pump shaft shall rotate on high quality permanently lubricated, greased bearings. The upper bearing shall be a deep grooved ball bearing and the lower bearings shall be a heavy duty double row angular contact ball bearing. Bearings shall be of sufficient size and properly spaced to transfer all radial and axial loads to the pump housing and minimize shaft deflection. L-10 bearing life shall be a minimum of 50,000 hours at flows ranging from one-half (1/2) of BEP flow to one and a half (1-1/2) times BEP flow (BEP is best efficiency point). The bearings shall be manufactured by a major internationally known manufacturer of high quality bearings, and shall be stamped with the manufacturer's name and size designation on the race.

Attachment: Holly Hill LS_13 Rehabilitation_Bid Set Specifications_04.30.19 (2019-R-38 : Lift Station #13 Rehabilitation)

Generic or unbranded bearings from other than major bearing manufacturers shall not be considered acceptable.

E. Power Cable: The power cables shall be sized according to NEC and CSA standards and shall be of sufficient length to reach the junction box without requiring splices. The outer jacket of the cable shall be oil and water resistant, and shall be capable of continuous submerged operation underwater to a depth of 65 feet (65').

F. Cable Entry System: The cable entry system shall consist of a submersible plug assembly which allows the cable be easily disconnected from the pump for service or replacement. Cable sealing shall be accomplished by a Nitrile compression grommet with both cylindrical and conical sealing surfaces, flanked by a stainless steel washer and an integrated strain relief. A brass (C3604) compression nut shall be threaded into to the cast iron EN-GJL-250 (ASTM A-48, Class 35B) cable plug housing, compressing the grommet ID to the cable while the grommet OD seals against the bore of the cable entry housing. Cable conductors shall be terminated in copper pin connectors which are separated and retained by a circular pin retainer fabricated from high dielectric strength Polyamid [30 percent (30%) GF]. Each pin shall pass through its own hole in the pin retainer, maintaining perfect alignment with the mating pins in the motor body. The corresponding motor body pin assembly shall be manufactured from high dielectric strength Polyamid [30 percent (30%) GF], with copper connector pins. The pin assembly shall be sealed with an O-ring to prevent water entry into the motor, and retained in the motor housing bore via a retaining ring. Attachment of the plug assembly to the motor shall engage the corresponding copper pins, creating a complete circuit between the motor and cable. The plug assembly shall be fastened with stainless steel fasteners, and shall be sealed by an O-ring.

The cable plug and sealed entry system as part of the motor shall be FM and CSA approved for use in NEC Class I, Division I, Groups C & D hazardous locations. The system shall be anti-wicking by design, and shall prevent any water that enters the cable through damage to the jacket from entering the motor. Cable entry designs which utilize potting compounds to provide a water tight seal, or those which do not allow the cable to be easily changed in the field shall not be considered equal.

2.03 ACCESSORIES

A. The pump manufacturer shall supply related pump accessories for the lift station as shown on the plan drawings.

1. Standard pump accessories may include, but not limited to, upper guides, rails, float brackets, floats, lift chains, lifting bails, anchor bolts, and hardware; all to be supplied in type 316 stainless steel materials.

Attachment: Holly Hill LS_13 Rehabilitation_Bid Set Specifications_04.30.19 (2019-R-38 : Lift Station #13 Rehabilitation)

2. The integral base elbows and pump rail brackets are to be construction of cast iron material.

3. The access covers are defined under Section 05 30 05.

2.03 CONTROL PANEL

A. GENERAL

1. The work included in this Section consists of furnishing all labor, equipment, tools, materials, and performing all operations required for furnishing control cabinet.

2. The Drawings are diagrammatic in character but should be adhered to as closely as possible consistent with fabrication of the control panel.

3. All work shall be executed in workmanlike manner by skilled personnel and the work shall present a neat and professional appearance when completed.

4. The term "provide" shall mean to furnish completely unless otherwise indicated.

5. The Vendor shall provide a detailed shop drawing.

6. In general, electrical materials and apparatus shall comply with all applicable tests, ratings, specifications, and requirements of the appropriate standards listed in section 1.02 herein. Underwriter's Laboratories, Inc. (UL) listed electrical components or assemblies shall be used and shall bear the approved device label of UL, and conform to UL 508A standards. The standards herein are minimums; the Vendor may exceed such minimums with prior approval of the County.

7. All work shall comply with applicable requirements and recommendations of standards published by listed agencies and trade associations, except to the extent more detailed and stringent requirements are indicated or required by local governing regulations. The control cabinets furnished herein shall be fully FDEP compliant.

8. All work shall comply with the latest editions of the NEC, National Fire Protection Association NFPA 70, NFPA 79, the National Electrical Safety Code (NESC), and all applicable state, municipal, and local codes. Work shall be subject to inspection and approval requirements of the local authority having jurisdiction.

Attachment: Holly Hill LS_13 Rehabilitation_Bid Set Specifications_04.30.19 (2019-R-38 : Lift Station #13 Rehabilitation)

9. Vendor shall guarantee all work and rectify any defects due to faulty materials or workmanship for a period of 18 months after delivery of control cabinet.

B. CONTROLS AND INSTRUMENTATION

1. The Duplex pump station control panel shall be designed for 240 Volt, single (1) phase. The panel shall also be designed for two (2) 3 horsepower pumps with 10 full load amps. Across the line starters shall be used to start the pumps up to full speed and off as necessary to maintain level in the pump station, using pump controller and level sensor.

2. The duplex control panel shall be manufactured for Hydra Service USA, Sanford, Florida, or approved equal to these specifications. The panel shall be constructed in accordance with UL 508A requirements for enclosed industrial control panels and shall bear the serialized UL label, with all components being U/L listed or Recognized for use in Industrial Control Panels.

C. ENCLOSURE:

1. All controls for the station operation shall be enclosed in a single tamper-resistant, NEMA 3R 304 stainless steel enclosure. The outer door shall have three-point latch mechanism with roller bar and heavy duty lockable handle. The door shall be able to be held open position at 90 degrees (90° minimum) with mechanical latches. The panel shall be sufficiently large to accept all control components without crowding. Larger enclosures shall contain door and panel stiffeners as required.

2. The enclosure shall have a hinged full-height inner door fabricated from high quality aluminum 5052-H32 0.125-inch (0.125") thick, shall be powder coat Iron Gray Texture. All holes shall be in accordance with UL 508A to maintain proper fitting of devices, i.e. notches to prevent turning. All components exposed for access shall have symmetrical cut outs with clean and de-burred edges.

3. All circuit breakers, control switches, indicator lights and other control devices shall be identified permanently with etched engraving on the dead front cover of the control panel. The door shall have a continuous aluminum piano type hinge with two (2) twist type latches.

4. The enclosure shall have a twelve gauge steel, formed, removable subpanel. The subpanel shall be degreased, cleaned, treated with a phosphatizing process, then primed and painted with white industrial grade baking enamel.

Attachment: Holly Hill LS_13 Rehabilitation_Bid Set Specifications_04.30.19 (2019-R-38 : Lift Station #13 Rehabilitation)

The enclosure and mounting system shall be designed to withstand wind loads as required by applicable building codes.

D. CONTROLS:

1. The panel shall consist of the following components:

a. SC-2000 Pump Controller with Operator Interface (one)

b. Liquid Level Sensor (one).

c. Motor Starters (one per pump).

d. Thermal Magnetic Circuit Breaker (one per pump).

e. Manual Transfer Assembly (one interlocked Main and Emergency Breaker).

f. Control Transformer with Primary and Secondary Circuit Breaker protection (one).

g. Generator Receptacle (one).

h. Duplex Convenience Outlet, GFI (one).

i. HOA Selector Switches (one per pump, float backup, and panel light).

j. Elapse Time Meters (one per pump).

k. Pilot Lights:

1) Run (one per pump - green).

2) Seal Fail (one per pump - amber).

3) Over-Temperature (one).

4) Fault (one per pump - amber).

5) Backup Float Enable (one - red).

6) Control Power Available (one - green).

7) Alarm Light (one).

Attachment: Holly Hill LS_13 Rehabilitation_Bid Set Specifications_04.30.19 (2019-R-38 : Lift Station #13 Rehabilitation)

8) Audible Alarm (one).

9) Lightning/Surge Arrestor (one).

10) Moisture Sensors (one per pump).

11) Heat Sensors (one per pump).

12) Power/Phase Monitor (one).

13) Power Supply (one).

14) Work Lamp (one).

E. GENERAL COMPONENTS:

1. Pump Control Module: The pump control module shall be a controller that is designed for the wastewater industry and provides set point adjustment for starting and stopping of up to four (4) pumps, set points for low and high level alarms, and selection of lead pump alternation. It shall include a user-friendly operator interface to enter set points and see liquid level. It shall contain outputs for pumps/alarms, 4-20 mA input for level signals, and digital inputs for float switches. It shall also be capable of in/outflow pump capacity calculation and interfacing with SCADA and /or Telemetry systems via an RS 232 serial port. The pump control module shall be an MPE SC2000 controller or pre-approved equal.

2. Liquid Level Sensor: The primary liquid level sensor shall be a submersible pressure transducer that is designed for the wastewater industry. It shall be a submersible hydrostatic type with a 316L Stainless casing. The transducer element shall be made of ceramic material. The level sensor shall provide a 4-20 mA output signal proportional to liquid level. It shall also provide transient protection. The level sensor shall be an “ABS”, Model HSC2 pressure transducer or pre-approved equal.

3. Motor Starters: The panel shall contain a motor starter for each motor. The motor starter shall be across the line non-reversing magnetic starter with individual mechanical overload protection on each power leg with reset installed through the dead front inner door unit. The Motor Starters shall be “Square D”, series, or pre-approved equal.

4. Thermal Magnetic Circuit Breakers: The circuit breakers shall be quick-make, quick-brake and trip free. The thermal and magnetic elements shall operate independently and be designed with a common trip bar breaking all

Attachment: Holly Hill LS_13 Rehabilitation_Bid Set Specifications_04.30.19 (2019-R-38 : Lift Station #13 Rehabilitation)

poles when a fault is received on any pole. "H" frame circuit breakers shall contain a self-test "Trip Selector" permitting a mechanical simulation of the over current tripping device. Each circuit breaker shall be mounted with the handles extending through the inner door. The circuit breakers shall be "Square D" LAL, JDL, or HDL series, or pre-approved equal.

5. Manual Transfer Assembly: If an automatic generator is not specified, a manual transfer interlock assembly shall be supplied. The assembly shall provide one (1) normal power circuit breaker, one (1) emergency power circuit breaker and interlock to prevent both circuit breakers from be energized at the same time.

6. Generator Receptacle: A 100 amp Russell Stoll #JRS1044FR receptacle and JAAB10 angle adapter panel mounted receptacle and flap cover shall be provided. The generator receptacle shall not be required if generator set is installed.

7. Duplex Convenience Outlet: Provide a convenience outlet, duplex receptacle with integral ground fault interrupter, to be mounted on the inner door. The receptacle shall be rated 15A, 120VAC and shall be manufactured by "Hubbell", or pre-approved equal.

8. HOA Selector Switches: A three (3)-position selector switch shall be provided for each pump. A two (2)-position selector switch shall be provided for the Backup Float Enable feature and the panel work lamp. These switches shall be 30 mm, NEMA 4X, maintained type switches. The HOA switches shall be manufactured by "Square D", series 9001, KS12B, and KS43B, or pre-approved equal.

9. Elapse Time Meters: Five (5) digit, non-resettable elapse time meters interfaced with the appropriate motor starters shall be mounted on the inner door. One (1) time meter for each pump. The elapse time meter shall be ENM, model T-50, or pre-approved equal.

10. Pilot Lights: Pilot lights shall be provided to indicate run and alarm status of the pumps/motors and the use of the float backup system. The lights shall have a removable lens and replaceable lamp. The lights shall be 30 mm, NEMA 4, 120VAC, full voltage type. The pilot lights shall be "Square D", series 9001, KP38G31, KP38A31, KP38R31, or pre-approved equal.

11. Alarm Light: A red strobe alarm light pipe mounted on the panels left side, unless otherwise shown on the drawings, shall be provided to indicate a high water condition. The unit shall consist of Ingram CTO15F-R strobe light, OLB one-half inch (1/2") conduit body, six inch (6") aluminum pipe, one-half inch (1/2") Myers hub, or pre-approved equal.

Attachment: Holly Hill LS_13 Rehabilitation_Bid Set Specifications_04.30.19 (2019-R-38 : Lift Station #13 Rehabilitation)

12. Audible Alarm: A Horn shall be provided to sound upon a high level condition. The horn shall be piezo type and shall be rated 45 db at 10 feet (10'). A silence pushbutton shall be mounted on the left side of the enclosure used to energize a relay to disconnect the horn when pressed. The silence pushbutton shall be individually labeled on the outside of the enclosure with a custom laser printed label that has been laminated for protection. The label color shall be white with black letters and black border. This label shall meet the requirements of the "Component Labels" section listed below. The pushbutton switch shall be 30 mm, NEMA 4X, flush type, black in color, and manufactured by "Square D", series 9001, KR1B, or pre-approved equal. The horn shall be a Federal Signal model 350-120-30 with trim ring (TR), or pre-approved equal.

13. Lightning/Surge Arrestor: A secondary arrestor, complying with UL 1449, 3rd Edition - latest, shall be installed on the line side of the main breaker in accordance with manufacturer's instructions. Arrestor shall be "Square D", model SDSA3650, or pre-approved equal.

14. Moisture Sensors: The panel shall be equipped with moisture sensing relays for each pump energizing red status indicator lights mounted on the inner door. The relays shall be "ECS" model 1110016, or pre-approved equal.

15. Heat Sensors: The panel shall be equipped to accept a thermal signal from each pump/motor. This signal shall shutdown the pump and energizes a red status indicator for the appropriate pump/motor.

16. Power/Phase Monitor: A power monitor relay shall be installed and connected to the control logic. When the relay is deactivated, it shall disconnect control power to the motor starters. The relay shall be deactivated in the event that any of the following conditions occur:

    a. Phase loss (single phasing).

    b. Phase reversal (sequence).

    c. Low voltage (brown out).

    The phase monitor relay shall be an "ORCO", model 001-230-1212 for 240VAC, 001-480-1212 for 480VAC, no equal.

17. Work Lamp: A work lamp shall be provided in the control panel. The work lamp shall be a fluorescent light fixture, 18 inches (18") wide, and have a single lamp. It shall be mounted inside of the top of the enclosure and centered from left to right. Mounting shall be welded studs mounted to the

Attachment: Holly Hill LS_13 Rehabilitation_Bid Set Specifications_04.30.19 (2019-R-38 : Lift Station #13 Rehabilitation)

roof of the enclosure. Drilling holes into the roof of the enclosure will not be accepted. The work lamp shall be provided with a manual operator type, two (2)-position switch (see HOA switches) located on the dead front and be labeled per the label specifications listed below. The work lamp shall be manufactured by "Utilitech", part number 069486, or pre-approved equal.

18. Battery Backup: Include battery backup system with 12 pin socket, battery, and signal system. Battery to maintain pump controller and accessories for minimum four (4) hours.

F. MISCELLANEOUS REQUIREMENTS:

1. Wiring: All wiring shall be color-coded using MTW #16 AWG minimum. Control wiring shall be numbered/lettered at each end. Wire numbers/letters shall be Panduit shrink sleeve or pre-approved equal. All wiring shall be routed through a wiring duct system to provide wire protection and an organized appearance.

2. Terminals: A 10 pole terminal block mounted on a 30-degree (30°) angle shall be provided as a minimum for interface with field installed equipment for the ease of field connection. If additional terminals are required, then additional 10 pole terminals must be used to meet the additional requirements unless there are less than seven (7) additional terminals required. If less than seven (7) additional terminals are needed, then terminal blocks of lesser poles of the same brand may be used to make up the difference needed. Individual pole terminal blocks supplied to meet the total connections required will not be allowed.

   Terminal blocks shall be mounted with a minimum of two inches (2") from both enclosure sides and a minimum of one inch (1") from the bottom of the enclosure for easy access to terminal screws.

3. Component Labels: All back panel components shall be labeled using UL approved yellow polyester laser/ink jet labels. The labels shall be manufactured by "Panduit", part number series C100 - C200. The nameplates shall be etched or engraved for the inner door components and logos. The labeling system shall be computer controlled to provide logos, post-script type or custom designs.

4. Control Panel Label: The control panel shall be provided with a job name or pump station name/number nameplate. This nameplate shall be located on the front door of the enclosure. The nameplate shall be a laminated two (2)-part system using black letters on a white background providing protection against fading, peeling, or warping. The labeling system shall be computer controlled to provide logos, post-script type or custom designs. The use of engraved plastic type nameplates is not acceptable.

Attachment: Holly Hill LS_13 Rehabilitation_Bid Set Specifications_04.30.19 (2019-R-38 : Lift Station #13 Rehabilitation)

5. Warning Label: A "Danger!! High Voltage Inside" label shall be provided on the inner door of the enclosure. The label shall be a laminated two (2)-part system using black letters on a goldenrod background providing protection against fading, peeling, or warping. This label shall meet the requirements of the "Component Labels" section listed above.

6. Drawings/Schematics: The control system shall have complete drawing/schematics using AutoCad®. The drawing shall have a complete Bill of Material, front panel view with component locations, sub-panel view with component locations and electrical schematic. References to the Bill of Material shall be located for each component. These drawings/schematics shall also be provided as laminated sheets that shall be affixed to the inside of the enclosure door.

7. Print Pocket: A plastic print pocket shall be provided and mounted on the inside of the front door for all stainless steel enclosures. This print pocket shall be mounted by welding three (3) threaded studs onto the inside of the front door of the enclosure. One (1) stud will be used for each side of the print pocket as well as one (1) used for the bottom edge of the print pocket. No self- tapping screws, adhesive tapes, or Velcro will be accepted for the mounting of the print pocket.

8. Mounting Hardware: All mounting hardware such as screws or bolts used in the manufacturing of the control panel shall be stainless steel. All holes in the back plate and dead front shall be drilled and tapped. No self-tapping screws, adhesive tapes, glues, epoxy, or Velcro will be accepted for the mounting of any hardware.

G. OPERATION:

1. Duplex Operation: Under normal conditions, the submersible transducer will provide a 4-20 mA output signal that is proportional to level to the pump controller. The pump controller will then provide signals to the starters to start the pumps up to full speed as needed to maintain the water level in the wet well. The pump controller will provide start and stop set points and alarm set points for all pumps. The pump controller will also provide alternation of the two (2) pumps to ensure equal runtime of all pumps. If the incoming flow exceeds the pump capacity of the lag pump, and the high-level float is activated a high-level alarm shall be activated on control panel visual and audible and by remote through the pump controller to alert maintenance personnel to the condition. A silence button shall be provided to turn off the horn, but the alarm beacon shall remain on until the high level condition is corrected. If the high-level float is activated for more than the time set on the backup float timer (10 sec.), control will transfer to float backup operation

Attachment: Holly Hill LS_13 Rehabilitation_Bid Set Specifications_04.30.19 (2019-R-38 : Lift Station #13 Rehabilitation)

regardless of the position of the "Select Controller / Floats" switch. Control will remain on backup floats until manually reset.

2. Redundant Float Backup Operation: Four (4) Floats (off, lead, lag, and high) shall be utilized to send a signal to the motor starters to operate the pump only if the level rises above the floats designated for the controller operation. Contingent upon wet well level, the lowest float shall signal the lead pump to shut down. Upon sump level rise, the next higher float shall signal the alternator to select and start a pump. If after the lead pump starts and the level continues to rise to the Lag Pump start contact, the float shall send a signal to the alternator to start the lag pump and both pumps shall run simultaneously. The level shall be lowered until the Stop Float is reached and the controller shall shutdown both the appropriate control contacts and the Alternator manufactured by Macromatic, ECS part number 1110011, or equal, will start and run the pumps simultaneously.

2.04 PUMP ACCESS HATCH

A. General

1. Door opening sizes, number, and direction of swing of door leaves, and locations shall be as shown on the Drawings. The Drawings shall indicate the clear opening requirements.

2. All doors shall be aluminum (mill finish) unless otherwise noted.

3. Openings larger than 42 inches (42") in either direction shall have double leaf doors.

4. Doors shall be designed for flush mounting and for easy opening from both inside and outside.

5. All doors shall be provided with an automatic hold-open arm with release handle.

6. Double leaf doors shall be provided with Type 316 stainless steel safety chains to go across the open sides of the door, when in the open position. Brackets shall be provided on the underside of the doors to hold the safety bars when not in use.

7. All hardware, including but not limited to, all parts of the latch and lifting mechanism assemblies, hold open arms and guides, brackets, hinges, springs, pins, and fasteners shall be Type 316 stainless steel.

8. Cylinder locks with keyway protected by a cover plug shall be provided with all hatches.

Attachment: Holly Hill LS_13 Rehabilitation_Bid Set Specifications_04.30.19 (2019-R-38 : Lift Station #13 Rehabilitation)

9. Door leafs shall be one-quarter inch (1/4") aluminum diamond plate, minimum, stiffened and designed for 300 psi.

10. Mill finish with bituminous coating finish applied to the exterior.

11. Hatches covers to be manufactured by USF Fabrication or Halliday.

PART 3 – EXECUTION

3.01 INSTALLATION

A. The equipment shall be installed and mounted by the CONTRACTOR in accordance with the manufacturer's drawings and instructions. All equipment shall be installed as shown in the drawings and in accordance with the manufacturer's recommendations. Piping shall be run as shown on the plans and be connected to all units in a manner to prevent leakage of water or sewage. Any departures from the locations or arrangements of units or connections there to, as shown on the plans, shall be detailed by the CONTRACTOR and approval there of obtained from the ENGINEER.

B. All units shall be factory assembled by the pump manufacturer.

3.02 MANUFACTURER'S FIELD SERVICES

A. Manufacturer's Service Representative shall provide competent personnel for a period of one (1) day in one (1) trip to:

1. Check installation of equipment.

2. Provide start-up of equipment.

3. Run specified tests (if any).

4. Train personnel in operation and maintenance of equipment.

3.03 TESTING

A. After installation of the sewage pumps, the pumps shall be given a running test in the presence of the ENGINEER during which time they shall demonstrate their ability to:

1. Perform without vibration or overheating at the specified conditions.

2. Load test, check amperage, phase to voltage test and insulation test.

Attachment: Holly Hill LS_13 Rehabilitation_Bid Set Specifications_04.30.19 (2019-R-38 : Lift Station #13 Rehabilitation)

3. Flow test based on timed drawdown of the wetwell and force main pressure.

B. All defects revealed by or noted during the tests shall be corrected or equipment replaced promptly at no additional expense to the OWNER.

C. CONTRACTOR shall furnish all labor, piping, equipment, and materials necessary for conducting the tests.

D. In case the CONTRACTOR is unable to demonstrate to the satisfaction of the ENGINEER that the units will satisfactorily perform the service required, the units may be rejected. CONTRACTOR shall remove and replace the equipment, at his own expense.

E. Prior to acceptance of the lift station, the as-built shop drawings, curves, details, and the operation and maintenance manuals shall be submitted. Provide, as a minimum, a set of four (4) manufacturer's manuals. In an effort to conserve environmental resources, and to minimize carbon footprint on the environment, an electronic file in PDF formatted manual can be supplied by email upon request.

3.03 SPARE PARTS

A. CONTRACTOR shall provide the following spare parts:

1. One (1) SC 2000 controller

2. One (1) impeller

3. One (1) UPS battery backup for the control panel

END OF SECTION

Attachment: Holly Hill LS_13 Rehabilitation_Bid Set Specifications_04.30.19 (2019-R-38 : Lift Station #13 Rehabilitation)

SECTION 46 05 04

PROCESS AND UTILITY PIPING, FITTINGS, VALVES, AND ACCESSORIES

PART 1 – GENERAL

1.01 DESCRIPTION

A. Scope of Work: The work included in this Section consists of furnishing all labor, equipment, and materials and in performing all operations necessary for the construction or installation of all process and utility piping, valves, valve boxes and all castings and appurtenances within, complete and ready for operation as shown on the Drawings and specified herein.

1.02 QUALITY ASSURANCE

A. Construction Requirements:

1. All underground lines shall be installed with at least 30 inches (30") of cover or as detailed on the drawings.

2. For underground utilities changes in pipe alignment and use of fittings may be allowed, subject to approval of the Engineer as to layout. Deflection shall not exceed 80 percent (80%) of the maximum allowable deflection as stated in the pipe manufacturer's installation instructions.

B. Pipe Inspection:

1. The Contractor shall obtain from the pipe manufacturers a certificate of inspection to the effect that the pipe and fittings supplied for this Contract have been inspected at the plant and that they meet the requirements of these specifications. Certification shall be stamped with corporate seal.

2. All pipe and fitting shall be subject to visual inspection at time of delivery by rail or truck and also just before they are lowered into the trench to be laid. Joints or fittings that do not conform to these specifications will be rejected and must be removed immediately by the Contractor.

3. The entire product of any plant may be rejected when, in the opinion of the Engineer, the methods of manufacture fail to secure uniform results, or where the materials used are such as to produce inferior pipe or fittings.

Attachment: Holly Hill LS_13 Rehabilitation_Bid Set Specifications_04.30.19 (2019-R-38 : Lift Station #13 Rehabilitation)

1.03 SUBMITTALS

A. Shop Drawings:

1. In general, six (6) copies of the following shop drawings shall be submitted to the Engineer for approval prior to construction:

   a. Mill test certificates or certified test reports on pipe and fittings.
   b. Details of restrained and flexible joints.
   c. Valve vaults.
   d. Valve boxes.
   e. All gate, plug, ball, solenoid, check valves, and automatic air release valves.
   f. Couplings.
   g. Service saddles, curb & corp stops.
   h. Flexible expansion joints.
   i. Pressure gauges.
   j. Identification tape.
   k. Joint lubricant.
   l. Detailed piping layout drawings and pipe laying schedule.
   m. Temporary plug and anchorage system for hydrostatic pressure test.
   n. Tie rods.
   o. Reduces pressure backflow preventers.

2. A separate shop drawing submittal will be required for each major item listed above and for each different type of an item within a major item. For example, separate submittals will be required for gate, plug, ball, solenoid, check and automatic air release valves. All submittals shall be in accordance with the General Conditions and the Supplementary Conditions.

B. Acceptance of Material:

1. The Contractor shall furnish an "Affidavit of Compliance" certified by the pipe manufacturer that the pipe, fittings and specials furnished under this Contract comply with all applicable provisions of current AWWA and ASTM Standards and these Specifications. No pipe or fittings will be accepted for use in the work on this project until the Affidavit has been submitted and approved by the Engineer.

2. The Owner reserves the right to sample and test any pipe or fitting after delivery and to reject all pipe and fittings represented by any sample which fails to comply with the specified requirements.

Attachment: Holly Hill LS_13 Rehabilitation_Bid Set Specifications_04.30.19 (2019-R-38 : Lift Station #13 Rehabilitation)

C. Operation and Maintenance Manuals:

1. Submit copies of operation and maintenance manuals for all the items requiring routine maintenance.

1.04 DELIVERY, STORAGE, AND HANDLING

A. During shipping, delivering and installing pipe, fittings, valves, backflow preventers, and accessories, they shall be handled in such manner as to ensure a sound undamaged condition.

B. Particular care shall be taken not to damage the pipe coating.

C. Insides of valves and backflow preventers shall be kept free of dirt and debris.

1.05 JOB CONDITIONS

A. Water in Excavation:

1. Water shall not be allowed in the trenches while underground pipes are being laid and/or tested. The Contractor shall not open more than 100 feet (100') of trench than the available pumping facilities are able to dewater to the satisfaction of the Engineer. The Contractor shall assume responsibility for disposing of all water so as not to interfere with the normal drainage of the territory in which he is working.

2. In no case, shall the pipelines being installed be used as drains for such water, and the ends of the pipe shall be kept properly and adequately plugged during construction by the use of approved stoppers and not by improvised equipment. All necessary precautions shall be taken to prevent the entrance of mud, sand, or other obstructing matter into the pipelines. If on completion of the work any such materials have entered the pipelines, it must be cleaned as directed by the Engineer so that the entire system will be left clean and unobstructed.

PART 2 – PRODUCTS

2.01 DUCTILE IRON PIPE AND FITTINGS

A. Ductile Iron Pipe: Ductile iron pipe shall conform to the requirements of ANSI/AWWA C150/A21.50, latest revision. The minimum thickness class for all pipe greater than twelve inches (12") diameter shall be pressure Class 250, and all pipe twelve inches (12") or less in diameter shall be pressure Class 350.

Attachment: Holly Hill LS_13 Rehabilitation_Bid Set Specifications_04.30.19 (2019-R-38 : Lift Station #13 Rehabilitation)

Pipe shall have a minimum rated water working pressure of 250 psi and shall be furnished in laying lengths of 20 feet (20') or less, unless specifically shown otherwise on the Drawings. The pipe shall be lined and coated as specified below.

1. Interior Lining for Raw Activated Sludge (RAS), Sludge Lines, and Force Mains: Ductile iron fittings and specials shall be coated with 40 mils nominal dry film thickness of Protecto 401 or approved equal in accordance with the manufacturers recommended actions.

2. Interior Lining for Potable and Reclaimed Water Piping: Ductile iron pipe, fittings and specials shall be cement lined in accordance with ASNI/AWWA C104, current revision, "Cement-Mortar Lining for Ductile Iron and Gray Iron Pipe and Fittings for Water". The cement lining shall have a standard thickness and after curing the lining shall have a seal coat of bituminous material in accordance with ANSI/AWWA C104, current revision.

3. Exterior Coatings: The exterior of ductile iron pipe fittings and specials to be installed underground shall be coated at the factory with standard bitumastic coating.

4. Polyethylene Encasement: Where indicated the Contractor shall utilize polyethylene encasement in accordance with ANSI/AWWA C105-T1. The polyethylene shall conform to ASTM D 1248 and be color coded to the service application.

5. Ductile iron pipe, fittings, and specials to be installed aboveground shall be furnished with a shop applied primer on the exterior. The shop primer shall be as specified in accordance with manufacturers recommendations.

B. Fittings: Fittings for ductile iron pipe shall be either mechanical joint, restrained joint or flanged joint as indicated on the Drawings and shall have a minimum working pressure of 250 psi. Fittings shall be ductile iron and shall conform to ANSI/AWWA C110, ANSI/AWWA C111 and ANSI/AWWA C153, latest revisions for flanged and mechanical joint pipe. Fittings shall be coated and lined as specified above for ductile iron pipe. The rubber gaskets for flanged, mechanical, and push on joints shall be as described below.

C. Push-On Joints: Pipe using push-on joints shall be in strict accordance with ANSI/AWWA C111, latest revision and shall be as manufactured by American Cast Iron Pipe Company (Fastite Joint), United States Pipe Company (Tyton Joint), or Clow Corporation (Super Bell Tite Joint). Jointing materials shall be provided by the pipe manufacturer and installation shall be in strict accordance with the manufacturer's recommended practice.

Attachment: Holly Hill LS_13 Rehabilitation_Bid Set Specifications_04.30.19 (2019-R-38 : Lift Station #13 Rehabilitation)

D. Mechanical Joints: Jointing materials for mechanical joints shall be provided by the pipe and fitting manufacturer. Materials assembly and bolting shall be in strict accordance with ANSI/AWWA C111 and ANSI/AWWA C153, latest revisions. Tee head bolts and nuts for mechanical joints shall be manufactured of CORTEN, high strength, low alloy, and corrosion resistant steel as manufactured by NSS Industries, Plymouth, Michigan or an equal approved by the Engineer.

E. Flanged Joints: Flanges shall be American Standard for 125-pound steam pressure with any special drilling and tapping as required to insure correct alignment and bolting. Gaskets shall be rubber full face type, minimum thickness of one-eighth inch (1/8"). Flanged joints shall be made with bolts and nuts, studs with a nut on each end, or studs with nuts where the flange is tapped.

The number of size of bolts shall conform to the same American National Standard as the flanges. Unless noted otherwise, bolts and nuts shall be Grade B conforming to the ASTM Specifications for Steel Machine Bolts and Nuts and Tap Bolts, Designation A 307. Bolts and studs shall be of the same quality as machine bolts. Bolts and nuts shall have hexagonal heads. Where noted on the Drawings or where flanges are underground, stainless steel nuts and bolts shall be used for flanges. Stainless steel shall be Type 316 in accordance with ASTM A 320, Class 2.

1. Machined Surfaces: Machined surfaces shall be cleaned and coated with a suitable rust preventative coating at the shop immediately after being machined.

F. Restrained Joints: Restrained joints shall be provided for all buried piping systems at the location required to restrain the system thrust. Pipe joints and fitting shall be restrained as specified below.

1. Manufactured Restrained Joints: Manufactured restrained joints shall be Flex-Ring, Lok-Ring or Lok-Fast manufactured by the American Cast Iron Pipe Company, Lok-Tyte or Tr-Flex Type manufactured by the United States Pipe Company as manufactured by McWane, or an equal approved by the Engineer. Joints shall be manufacturer's standard specifically modified push-on type joints with joint restraint provided by ductile iron retainer rings joined together by corrosion resistant, high strength steel tee head bolts and nuts or with joint restraint provided by a welded on retainer ring and a split flexible ring assembled behind the retainer ring.

Restrained joint pipe and fittings shall be ductile iron only and shall comply with applicable portions of this specification. Manufactured restrained joints shall be capable of deflection during assembly. Deflection shall not exceed 80 percent (80%) of the manufacturer's recommendations.

Attachment: Holly Hill LS_13 Rehabilitation_Bid Set Specifications_04.30.19 (2019-R-38 : Lift Station #13 Rehabilitation)

Tee head bolts and nuts for restrained joints shall be manufactured of CORTEN, high strength, low alloy, corrosion resistant steel as manufactured by NSS Industries, Plymouth, Michigan, or an equal approved by the Engineer.

2. Alternate Restrained Joints:

a. When prior approval is obtained from the Engineer, ductile iron pipe and fittings with mechanical joints may be restrained using a follower gland which includes a restraining mechanism. When actuated during installation, the restraining device shall impart multiple wedging actions against the pipe wall which increases resistance as internal pressure in the pipeline increases. The pipe must be suitable for use with the proposed device.

The joint shall maintain flexibility after installation. Glands shall be manufactured of ductile iron conforming to ASTM A 536 and restraining devices shall be of head treated ductile iron with a minimum hardness of 370 BHN. The gland shall have standard dimension and bolting patterns for mechanical joints conforming to ASNI/AWWA C111 and C153, latest revisions.

Tee head bolts and nuts shall be manufactured of corrosion resistant, high strength, low alloy CORTEN steel in accordance with ASTM A 242.

The restraining wedges shall have twist off nuts to insure proper torquing. The mechanical joint restraint device shall have a minimum working pressure rating of 250 psi with a minimum safety factor of two to one (2:1) and shall be MEGALUG® as manufactured by EBBA Iron, Inc. No other retainer gland type device will be acceptable. After installation prior to backfilling, all parts of the joint restraint system shall be coated with coal tar epoxy equal to Kop-Coat Bitumastic No. 300-M.

b. When prior approval is obtained from the Engineer, ductile iron pipe and fittings with push on joints may be restrained using a restraining gasket similar to the “Field Lok” gasket manufactured by U.S. Pipe & Foundry. The device must be suitable for the pipe and pressure rating intended and is subject to approval by the Engineer. The required length of restrained joint pipe shall be provided on either side of all valves and fittings employing restraining devices. Restrained lengths shall be calculated per DIPRA standards based on Type II laying conditions and an operating pressure of 150 psi, unless otherwise indicated.

Attachment: Holly Hill LS_13 Rehabilitation_Bid Set Specifications_04.30.19 (2019-R-38 : Lift Station #13 Rehabilitation)

2.02 POLYVINYL CHLORIDE (PVC) PIPE AND FITTINGS

A. Gravity Drainage Piping: PVC pipe used for gravity drainage piping installed underground shall be SDR 26 pipe. Fittings shall be as specified in another section.

B. Small PVC Pressure Piping: Unless otherwise specified, all PVC pressure pipe smaller than four inches (4") nominal diameter shall be Schedule 80 PVC or Endot Endpure HDPE, (as shown). Schedule 80 pipe shall have either solvent welded or threaded joints. PVC pressure pipe shall bear the approved seal of the National Sanitation Foundation (NSF). PVC pipe that is exposed to sunlight shall be manufactured with additives to provide resistance to ultraviolet deterioration. No glued joint pipe shall be installed below ground, unless otherwise specified. All water pipe is to be Class 200 (DR 21) gasketed bell and spigot pipe blue in color.

C. Fittings: Socket type, solvent welded fittings for Schedule 80 PVC pipe shall be in conformance with ASTM D 2467. Threaded type fittings for Schedule 80 PVC pipe shall be in conformance with ASTM D 2464. All solvent welded or threaded joints shall be watertight.

D. Flanges: Flanges for Schedule 80 PVC pipe shall be rated for a 150-psi working pressure with ANSI B16.1 dimensions and bolting pattern. Flanges shall be connected to PVC piping with either solvent welded or threaded joints in accordance with ASTM D 2467 or ASTM D 2464, respectively. Gaskets shall be neoprene, full faced type with a minimum thickness of one-eighth inch (1/8"). Nuts and bolts shall be hexagonal with machine threads, manufactured of Type 316 stainless steel in accordance with ASTM A320, Class 2. Type 316 stainless steel flat washers with lock washers shall be used against PVC flanges.

E. Solvent Cement: PVC solvent cement shall be in compliance with ASTM D 2564 and in accordance with the pipe manufacturer's recommendations.

F. Thread Lubricant: Lubricant for Schedule 80 threaded joints shall be Teflon tape only.

G. Polyvinyl Chloride Pipe Four Inches (4") and Larger in Size for Pressure Service: Polyvinyl chloride pipe for nominal diameters four inches (4") to 12 inches (12") in size shall conform to the requirements of AWWA C900 with a dimension ratio of DR 18, pressure class 150, and gasketed integral bell ends. For PVC pipe larger than 12 inches (12") for pressure service, the pipe shall conform to the requirements of AWWA C-905 with a minimum DR of 25, pressure rating of 165 psi, with gasketed integral bell ends. Pipe shall be designed for maximum working pressure of not less than 150 psi and with not less than a four (4) to one (1) sustained hydrostatic pressure safety factor. Fittings for C-900 PVC pipe shall

Attachment: Holly Hill LS_13 Rehabilitation_Bid Set Specifications_04.30.19 (2019-R-38 : Lift Station #13 Rehabilitation)

be ductile iron fittings with restrained joint ends for potable water or reclaimed water lines, and restrained PVC fittings for sanitary force mains.

H. All PVC pipe installed shall be color coded for the service intended. Potable water piping shall be extruded blue, reclaimed water shall be lavender, force main white, and gravity sewer green. Care shall be taken to avoid exposure to sunlight. Pipe should be marked for its use in three places on the pipe barrel.

I. Joints [Four Inches (4") and Larger PVC Pipe]:

1. Bell and Spigot:

a. Pipe joints shall be made with integral bell and spigot pipe ends. The bell shall consist of an integral thickened wall section designed to be at least as strong as the pipe wall. The bell shall be supplied with factory glued rubber ring gasket with conforms to the manufacturer's standard dimensions and tolerances. The gasket shall meet the requirements of ASTM F 477 "Elastomeric Seals (Gaskets) for Joining Plastic Pipe". PVC joints shall be "Ring-Tite" as manufactured by J-M Manufacturing Company, Inc. or an equal approved by the Engineer.

2. Restrained Joints:

Where indicated on Drawings, to prevent pipe joints and fittings from separating under pressure, pipe joints and fittings shall be restrained as follows:

a. PVC pipe bell and spigot joints shall be restrained with EBBA Iron MEGALUG® Series 1500 Restrainer or an equal approved by the Engineer. The restraining device and Tee head bolts shall be manufactured of high strength ductile iron meeting ASTM A 536, Grade 65-42-10. Clamping bolts and nuts shall be manufactured of corrosion resistant high strength, low alloy CORTEN steel meeting the requirements of ASTM A 242.

b. Cast iron mechanical joint fittings used with PVC pipe shall be restrained with the EBBA Iron MEGALUG® Series 2000 PV Restrainer or an equal approved by the Engineer. The restraining device and Tee head bolts shall be manufactured of high strength ductile iron meeting ASTM A 536, Grade 65-42-10. Clamping bolts and nuts shall be manufactured of corrosion resistant high strength, low alloy CORTEN steel meeting the requirements of ASTM A 242.

Attachment: Holly Hill LS_13 Rehabilitation_Bid Set Specifications_04.30.19 (2019-R-38 : Lift Station #13 Rehabilitation)

c. Thrust Blocking. Provided concrete reaction or thrust backing on all pressure pipe lines four inches (4") in diameter or larger (except those having flanged joints or restrained joints) at all tees, plugs, caps, and at bends defecting 222 degrees (222°) or more, or movement shall be prevented by attaching suitable metal rods or straps as directed by the Engineer. Concrete used for this purpose shall be Class "C". Reference reaction blocking table is shown on construction plan details.

d. Joint restraint. Push on joints on either side of valves and fittings restrained by mechanical restraining devices shall be restrained with "Uni-Flange" mechanisms. The number of restrained joints shall be determined by DIPRA methods and a laying schedule shall be provided for approval by the Engineer prior to installation of joint restraint.

2.03 PVC FITTINGS [FOUR INCHES (4") AND LARGER PVC PIPE]

A. Fittings shall be PVC and manufactured of the same design as the PVC pipe. PVC fittings four inches (4") through 36 inches (36") shall be PVC injection molded made of materials meeting or exceeding the requirements of cell class 12454-B material as defined in ASTM D 1784. Fittings shall be manufactured with pipe that meets or exceeds AWWA C-905 standard. All PVC fittings must comply with or exceed ANSI/AWWA C907, Uni-B-12, and Uni-B-14 standards. All PVC fittings must be certified by CSA to the CSA B137.3 standard as third party certification. The fittings must be of the same design as the PVC pipe with an HDB of 4000 psi and minimum SDR 25 wall thickness design. All fittings must have UL-FM approval, and shall comply with or exceed all ASTM Standards for fittings. Fittings must have NSF-61 certification for contact with potable water. PVC fittings shall be pressure rated to 165 psi or greater.

B. All restrained joint systems shall be pressure rated the same as the PVC pipe and fittings. All components of the restraint system shall meet or exceed all requirements of ANSI/AWWA C-111/A21.11 latest revision. Restraints shall provide a full 360 degree contact on the pipe with sufficient gripping action to secure the clamp to the pipe and be designed so that the restraint action is increased as a result of increases in the line pressure. Restraint devices for PVC pipe and fittings shall consist of split restraint ring installed on the spigot, connected to a split ring which seats behind the gasket race of the fitting. The split restraint ring shall incorporate a series of machined serrations (not "as cast") on the inside diameter to provide positive restraint, exact fit and 360 degree contact and support of the pipe wall. The two halves of the split backup ring shall interlock without the need for additional bolts and shall form a beveled leading edge to assure exact fit behind the fitting gasket race. Restraint devices shall be of ductile iron, ASTM A 536, Grade 65-45-12 and connecting bolts shall be of high strength, low alloy material in accordance with ASNI/AWWA C111/A21.11.

Attachment: Holly Hill LS_13 Rehabilitation_Bid Set Specifications_04.30.19 (2019-R-38 : Lift Station #13 Rehabilitation)

Restraint devices shall be Uni-Flange 1300 series or other approved restrained joint devices.

2.04 WALL SLEEVES, SEALS, PIPES, AND NON-STANDARD CASTINGS

A. Wall Sleeves: Wall sleeves shall be of cast iron, ductile iron, or carbon steel. The sleeve shall be hot dipped galvanized after fabrication and shall have a waterstop located in the center of the wall. Sleeves shall be provided with seals and shall be sized as required for the installation of seals. Sleeves shall terminate flush with finished surfaces of walls and ceilings, and shall extend two inches (2") above the finished floor unless otherwise shown on the Drawings.

1. Wall sleeves shall be installed for all piping passing through building walls and floors, except where noted on the Drawings. Sleeves shall be of sufficient size to pass the pipe without binding. Escutcheons shall be provided at walls and floor to completely conceal the sleeves smaller than three inches (3"). Escutcheons shall be 304 SS split-type.

B. Wall Sleeve Seals: Wall sleeve seals shall be modular mechanical type consisting of interlocking synthetic rubber links shaped to continuously fill the annular space between the pipe and wall sleeve. Links shall be loosely assembled with bolts to form a continuous rubber belt around the pipe with a pressure plate under each bolt head and nut. After the seal assembly is positioned in the sleeve, tightening of the bolts shall cease the rubber sealing elements to expand and provide an absolutely water-tight seal between the pipe and wall sleeve. The synthetic rubber shall be suitable for exposure to sludge and groundwater. Bolts, nuts, and hardware shall be 18-8 stainless steel. The seals shall be Link Seal as manufactured by Thunderline Corporation or equal, and the wall sleeve and seal shall be sized as recommended by the seal manufacturer.

C. Wall Pipes: Wall pipes shall be of the size and types indicated on the Drawings. All wall pipes shall be of ductile iron and shall have a central fin not less than two inches (2") thick and the same diameter as the bolting flange cast midway of the length to form a waterstop. Each wall pipe shall be of the same grade, thickness, and interior coating as the piping to which it is joined. Those portions of the wall pipes that are buried shall have a coal tar epoxy outside coating.

D. Non-Standard Fittings and Castings: Fittings having non-standard dimensions and cast especially for this project shall be of an approved design. Fittings shall be manufactured to meet the requirements of the same specifications and shall have the same diameter and thickness as standard fittings but laying lengths and types of ends shall be determined by positions in the pipelines and by the particular piping to which it is connected. Flange facing and drilling shall conform to the 125-pound American National Standards Institute. Where require, flanges shall be drilled and tapped for studs. Other dimensions shall be substantially equal to corresponding parts of standard bell and spigot fittings.

Attachment: Holly Hill LS_13 Rehabilitation_Bid Set Specifications_04.30.19 (2019-R-38 : Lift Station #13 Rehabilitation)

2.05 PIPE COUPLINGS

A. Couplings:

1. Pipe couplings used to join two (2) pieces of plain end pipe shall be sized to suit the outside diameter of the pipe ends to be jointed. Transition couplings shall be used to join pipes of different outside diameters. Pipe couplings shall be bolted type with steel middle ring and end followers. The couplings shall be restrained for the test pressure of line using approved retaining system.

2. All carbon steel parts of the coupling shall be coated on the interior and exterior with a fusion bonded thermosetting epoxy coating with a 12-mil nominal coating thickness. The coating shall be equal to AL-CLAD as manufactured by Dresser Industries, Inc.

3. Gaskets for the coupling shall be wedge type manufactured of Buna-N resilient rubber.

4. Bolts shall be manufactured of high strength Type 304 stainless steel with Type 316 stainless steel hexagonal nuts. Bolts and nuts shall conform dimensionally to ANSI/AWWA C111, latest revision.

5. Couplings shall be Style 38 as manufactured by Dresser Industries, Inc. or an equal approved by the Engineer.

2.06 PVC BALL AND BALL CHECK VALVES

A. PVC Ball Valves: All PVC ball valves two inch (2") through four inch (4") in size shall be of a one-piece capsule type manufactured of Type 1, Grade 1 PVC. Ball valves shall be true union design with two-way blocking capability and shall have solvent welded socket or NPT threaded ends. Ball valves shall have Teflon seats with Viton backing cushions and Viton O-ring seals, and shall be designed for a 150-psi water working pressure at 120°F. Valves shall be supplied with ABS lever operating handles. PVC ball valves shall be manufactured by Asahi/America, or equal approved by the Engineer.

B. PVC Ball Check Valves: All PVC ball check valves one inch (1") through two and one-half inch (2-1/2") in size shall be of a solid thermoplastic construction manufactured of Type 1, Grade 1 PVC. Ball check valves shall be true union design with solvent welded socket or NPT threaded ends. Ball check valves shall be furnished with a solid thermoplastic ball. Ball seat shall be Teflon coated Viton. The same seal shall function as both the ball seat and the union seal. PVC ball check valves shall be designed for a 150-psi water working pressure at 120°F. Valves shall be manufactured by Asahi/America, or an equal approved by the Engineer.

Attachment: Holly Hill LS_13 Rehabilitation_Bid Set Specifications_04.30.19 (2019-R-38 : Lift Station #13 Rehabilitation)

2.07 GATE VALVES

A. Bronze Gate Valves: Gate valves installed aboveground, less than two inches (2") in size and smaller, shall be Class 150 all bronze valves conforming to Fed. Spec. WW-V-54d, Type I, Class B designed for a non-shock water pressure of 300 psi. Bronze for valve body and internals shall be in accordance with ASTM B 16.18. Valves shall be furnished with screwed ends, handwheel operator, non-rising stem, one-piece solid wedge disc and screwed bonnet. Valves shall be as manufactured by Crane, Powell or an approved equal.

B. Ductile Iron Gate Valves:

1. Ductile iron gate valves shall open by turning to the left (counter-clockwise), when viewed from the stem. When fully open, gate valves shall have a clear waterway equal to the nominal diameter of the pipe. Operating nut or hand wheel shall have an arrow cast in the metal indicating the direction of opening. Each valve shall have the manufacturer's distinctive marking, pressure rating and year of manufacture cast in the body. Prior to shipment from the factory, each valve shall be tested by applying to it a hydrostatic pressure equal to twice the specified working pressure. Hydrostatic and leakage tests shall be conducted in strict accordance with ANSI/AWWA C509/515, latest revisions.

2. Gate valves with nominal sizes from two to 24 inches (2-24") shall conform to ASNI/AWWA C509/C515, latest revision, and shall be designed for a minimum working pressure of 250 psi. Valves sixteen inches (16") and larger shall be AWWA C515 resilient seat only. Valves shall be ductile iron body resilient seat type with O-ring stem seals. The valve stem, stem nut, glands and bushings shall be manufactured of ASTM B 763 copper alloy with a zinc content of less than ten percent (<10%). Valve disc shall be constructed to assure uniform seating pressure between disc and body seating surface. Resilient seat of valve shall be formed by an EPDM which is permanently bonded to and completely encapsulates a ductile iron valve disc. Interior of valve body shall be coated with a fusion bonded, thermosetting epoxy coating in accordance with AWWA C550, latest revision. Coating shall be six to 12 (6-12) mils nominal thickness. Surfaces shall be clean, dry, and free from rust and grease before coating. Exterior surfaces shall be coated as specified hereinafter. Resilient seated type gate valves shall be as manufactured by U.S. Pipe, Clow, or American Darling, unless specifically required otherwise by City standards.

3. Valve Joints: All gate valves shall have either mechanical joint, restrained joint or flanged ends to fit the pipe run in which they are to be used. Gate

Attachment: Holly Hill LS_13 Rehabilitation_Bid Set Specifications_04.30.19 (2019-R-38 : Lift Station #13 Rehabilitation)

valves installed on push on joint pipe shall have mechanical joint ends unless otherwise specified.

4. Valve Operators: Gate valves shall open left (counter-clockwise) when viewed from the stem. Unless otherwise shown on the Drawings or specified herein, gate valves shall have non-rising stems. Buried gate valves shall be furnished with a two inch (2") square AWWA standard nut operator with a valve box and cover. Gate valves located aboveground or inside structures shall be furnished with a handwheel operator which shall have an arrow cast in the metal indicating the direction of opening. Gate valves used as isolation valves for reduced pressure backflow preventers shall be of the open screw and yoke (OS&Y) design with a handwheel operator.

5. Exterior Valve Coatings: All exterior surfaces of iron body gate valves shall be clean, dry, and free from rust and grease before coating. For buried service, the exterior ferrous parts of all valves shall be coated at the factory with fusion bonded epoxy in compliance with ANSI/AWWA C550. Prior to backfilling, all uncoated units, bolts, glands, rods, and other parts of joints shall be coated in the field with coal tar epoxy equal to Kop-Coat Bitumastic No. 300-M. For valves installed aboveground, the exterior ferrous parts of all valves shall be shop primed at the factory with one coat, minimum dry film thickness one and one-half (1.5) mils, of a primer with rust-inhibitive pigments and synthetic resins. Following installation, aboveground valves shall be finish painted in accordance with manufactures recommendations.

2.08 PINCH CHECK VALVES

A. Valves are to be of the flow operated check type with flanged joint ends on both check sleeve and metal body. Port areas shall be 100 percent (100%) of the mating pipe port area. The port area shall contour down to a duckbill which shall allow passage of flow in one direction and prevent reverse flow in the other direction. The flexible duckbill sleeve shall be one-piece rubber construction with fabric reinforcement. The flange shall be drilled to ASNI B16.1, Class 125/ANSI B16.5 Class 150 standard. Valve body shall be drilled and tapped for flushing connection on top and bottom of the housing. Valve body shall be two-piece split body construction. The two (2) halves shall be sealed by diamond shaped cross section rubber gaskets permanently locked by a groove cast in the valve body. Company name and location shall be cast onto the valve body. The valve shall be designed for a maximum back pressure of 100 psi. The valve shall be red valve series 33 or equal.

B. Interior Valve Coating: Prior to shipment from the factory, the interior ferrous surfaces of the valve, except for finished, non-ferrous or bearing surfaces, shall be coated with a fusion bonded, thermosetting epoxy coating in accordance with

Attachment: Holly Hill LS_13 Rehabilitation_Bid Set Specifications_04.30.19 (2019-R-38 : Lift Station #13 Rehabilitation)

AWWA C550, latest revision. Coating shall be holiday free with a minimum thickness of 12 mils. Surfaces shall be clean, dry, and free from rust and grease before coating.

C. Exterior Valve Coating: All exterior surfaces of swing check valves shall be clean, dry, and free from rust and grease before coating. For valves installed in below ground valve vaults, the exterior ferrous parts of all valves shall be coated at the factory with coal tar epoxy with a minimum total finish dry film thickness of 20 mils. Following installation, all uncoated nuts, bolts, glands, rods, and other parts of joints shall be coated in the field with coal tar epoxy equal to Kop-Coat Bitumastic No. 300-M. For valves installed aboveground, the exterior ferrous parts of all valves shall be shop primed at the factory with one coat, minimum dry film thickness one and one-half (1.5) mils, of a primer with rust-inhibitive pigments and synthetic resins. Following installation aboveground valves shall be finish painted in accordance with manufacturer's recommendations.

2.09 PLUG VALVES

A. General: Plug valves shall be non-lubricated eccentric type with flanged or mechanical joint ends as specified below. Valves shall open by turning to the left (counter-clockwise), when viewed from the stem. Port area of valves shall be a minimum of 80 percent (80%) of full pipe area. Valve pressure ratings, body flanges and wall thicknesses shall be in full conformance with ASNI B16.1, latest revision. Valves shall seal leak-tight against full rated pressure in both directions. Prior to shipment from the factory, each valve shall be hydrostatically tested as follows: Valve seats shall be tested to provide leak tight shut off to 175 psi for valves through 12 inch (12") and 150 psi for valves 14 inches (14") and larger, with pressure in either direction. In addition, a hydrostatic shell test shall be performed with a plug open to a pressure twice that of rating specified above to demonstrate overall pressure integrity of the valve body. Plug valves shall be eccentric plug valves as manufactured by DeZurik, Milliken, or approved equal.

B. Eccentric Plug Valves: Eccentric plug valves shall be Series 100 as manufactured by DeZurik or equal. Valve bodies shall be constructed of high strength cast iron conforming to ASTM A 126, Class B and AWWA C504, latest revisions. Valve bodies shall be cast with raised eccentric seats which have a corrosion resistant welded in overlay of not less than 90 percent (90%) pure nickel on all surfaces contacting the plug face. Valve seats shall be in accordance with AWWA C504 and AWWA C507, latest revisions. Valves shall be furnished with resilient faced plugs with Neoprene facing, suitable for use with sludge. Valves shall be furnished with replaceable, permanently lubricated, stainless steel, sleeve-type bearings in the upper and lower plug stem journals. Plug stem bearings shall comply with AWWA C504 and C507, latest revisions. Valves shall be bolted bonnet design. Valves shaft seals shall be designed so that they can be repacked without removing the bonnet and the packing shall be adjustable. Packing material shall be Buna-Vee type packing. Valve shaft seals shall be in accordance

Attachment: Holly Hill LS_13 Rehabilitation_Bid Set Specifications_04.30.19 (2019-R-38 : Lift Station #13 Rehabilitation)

with AWWA C504 and AWWA C507, latest revisions. All exposed valve nuts, bolts, springs, washers, and the like shall be Type 304 stainless steel.

C. Interior Valve Lining: All interior ferrous surfaces of the valve that will have contact with the leachate except the valve seating surfaces shall be coated with a factory applied, fusion bonded, thermosetting epoxy coating in accordance with AWWA C550, latest revisions. Coating shall be holiday free with a minimum thickness of 12 mils. Surfaces shall be clean, dry, and free from rust, oil, and grease before coating.

D. Exterior Valve Coating: All exterior surfaces of plug valves shall be clean, dry, and free from rust and grease before coating. For buried service, the exterior ferrous parts of all valves shall be coated at the factory with coal tar epoxy with a minimum total finish dry film thickness of 20 mils. Prior to backfilling, all uncoated nuts, bolts, glands, rods, and other parts of joints shall be coated in the field with coal tar epoxy equal to Kop-Coat Bitumastic No. 300-M. For valves installed above ground, the exterior ferrous parts of all valves shall be shop primed at the factory with one coat, minimum dry film thickness one and one-half (1.5) mils, of a primer with rust inhibitive pigments and synthetic resins. Following installation aboveground valves shall be finish painted in accordance with manufacturer's recommendations.

E. Valve Joints: All plug valves installed aboveground, in valve vaults or on flanged piping shall have flanged ends. Flanges shall comply with facing, drilling and thickness of ANSI Standards for Class 125 dimension. Nuts and bolts for flanged connections in valve vaults or corrosive atmospheres shall be Type 316 stainless steel in accordance with ASTM A 320, Class 2. Nuts and bolts for aboveground installations or non-corrosive atmospheres shall be carbon steel in accordance with ASTM A 307, Grade B. All buried plug valves shall have mechanical joint ends with dimensions, bolting patterns, and assembly in strict accordance with ANSI/AWWA C111, latest revision. Tee head bolts and nuts for mechanical joints shall be manufactured of CORTEN-A, high strength, low alloy, and corrosion resistant steel as manufactured by NSS Industries, Plymouth, Michigan or an equal approved by the Engineer.

F. Mechanical Valve Actuators:

1. All plug valves installed in valve vaults or buried underground shall have actuators designed for buried and submerged service. Valves shall have seals on all shafts and gaskets on valve and actuator covers to prevent entry of water and dirt. Actuator mounting brackets for buried and submerged service shall be totally enclosed and shall have gasket seals. All exposed valve nuts, bolts, springs, washers, and the like shall be Type 304 stainless steel.

Attachment: Holly Hill LS_13 Rehabilitation_Bid Set Specifications_04.30.19 (2019-R-38 : Lift Station #13 Rehabilitation)

2. All plug valves six inches (6") in size and larger shall be furnished with mechanical gear actuators. Gear actuators shall be furnished with AWWA Standard two inch (2") square operating nuts for buried valves, or handwheel, chainwheel, or two inch (2") square nut operators for aboveground or valve vault installation, as shown on the Drawings. Gear actuator shall be sized for the maximum pressure differential across the valve, equal to the pressure rating of the valve. All gearing shall be enclosed in a high strength cast iron housing, suitable for running in a lubricant. Housing shall be provided with seals on all shafts to prevent the entry of dirt and water into the actuator. Actuator shaft and quadrant shall be supported on permanently lubricated bronze bearings. Actuator shall clearly indicate valve position for aboveground and valve vault installations and an adjustable stop shall be provided to set closing torque. Actuator shall be capable of withstanding an over-torque without damage up to 450 foot pounds for two inch (2") square nut operators and to 300 foot pounds for handwheel or chainwheel operators.

3. Four inch (4") and smaller aboveground valves shall be furnished with manual actuators, one-quarter (1/4) turn to open. Actuator shall be supplied with an AWWA Standard two inch (2") operating nut with a standard valve operating lever.

2.10 BUTTERFLY VALVES

A. General: All butterfly valves shall be of the tight closing, rubber seat type with rubber seats that are securely fastened to the valve body or disc. No metal to metal seating surfaces will be permitted. Valves shall be bubble tight at rated pressures with flow in either direction, and shall be satisfactory for applications involving throttling service and/or frequent operation and for applications involving valve operation after long periods of inactivity and for buried installation. Valve discs shall rotate 90 degrees (90°) from the full open position to the tight shut position. Valves shall meet the full requirements of AWWA Standard C 504 for Class 150B, short body, flanged or mechanical joint as required. Wafer design valves are not acceptable, except when indicated on the Drawings. The manufacturer shall have manufactured tight closing, rubber seat butterfly valves for a period of at least five (5) years. All valves shall be Henry Pratt Company, DeZurik, Mueller, or equal.

B. Valve Body: Valve bodies shall be constructed of cast iron ASTM A 126 Class B or ASTM A 48 Class 40. Ends shall be mechanical joint for buried service and flanged for aboveground use. Flange drilling shall be 125 pound in accordance with ANSI B16.1. Two (2) trunnions for shaft bearings shall be integral with each valve body. When disc has the rubber seat, the valve body shall have an 18-8 Type 304 stainless steel body seat. The port diameter shall be no smaller than one inch (1") less than the nominal valve size.

Attachment: Holly Hill LS_13 Rehabilitation_Bid Set Specifications_04.30.19 (2019-R-38 : Lift Station #13 Rehabilitation)

C. Valve Shaft: The valve shaft may consist of a one-piece unit extending completely through the valve unit or may be the “stub shaft” type. Materials to be stainless steel 18-8 Type 304.

D. Valve Discs: Valve discs shall be constructed either of cast iron ASTM A 126 Class B, ductile iron ASTM A 536 or cast iron ASTM A 48 each with Type 316 stainless steel seating edge or the entire disc may be constructed of cast 316 stainless steel. The stainless steel seating edge is not applicable to rubber seat disc type valves.

E. Valve Seats: Valve seats shall be of a synthetic or natural rubber compound and can be mounted on the valve body.

F. Valve Bearings: Valves shall be fitted with sleeve type bearings. Bearings shall be corrosion resistant and self-lubricating.

G. Valve Packings: Packing shall be self-adjusting Chevron type or of the O-ring type.

H. Interior and Exterior Valve Coatings: The valve shall be coated similarly as described in Section 2-05 C and D.

2.11 SWING CHECK VALVES

A. Swing check valves two through 12 inch (2-12") in size shall conform to AWWA C-508, latest revision, and shall be designed for a minimum water working pressure of 150 psi. Check valves shall have cast iron body, swing type and ends shall be flanged, Class 125 in accordance with ANSI B16.1. When open, the valve shall have a straight way passage with a minimum flow area equal to the full pipe area. Swing check valves shall be completely bronze fitted with renewable bronze seat ring and a rubber faced disc; valve hinge pin shall be stainless steel. Check valves shall be supplied with an outside lever and weight.

B. Swing check valves shall absolutely prevent the return of water back through the valve when the inlet pressure decreases below the downstream pressure. The check valve shall be constructed such that the disc and body seat ring may be easily removed and replaced without removing the valve from the line. Each valve shall by hydrostatically tested at the factory, at a test pressure of 300 psi.

C. Interior Valve Coating: Prior to shipment from the factory, the interior ferrous surfaces of the valve, except for finished, non-ferrous or bearing surfaces, shall be coated with a fusion bonded, thermosetting epoxy coating in accordance with AWWA C-550, latest revision. Coating shall be holiday-free with a minimum thickness of 12 mils. Surfaces shall be clean, dry, and free from rust and grease before coating.

Attachment: Holly Hill LS_13 Rehabilitation_Bid Set Specifications_04.30.19 (2019-R-38 : Lift Station #13 Rehabilitation)

D. Exterior Valve Coating: All exterior surfaces of swing check valves shall be clean, dry, and free from rust and grease before coating. For valves installed in below ground valve vaults, the exterior ferrous parts of all valves shall be coated at the factory with coal tar epoxy with a minimum total finish dry film thickness of 20 mils. Following installation, all uncoated nuts, bolts, glands, rods, and other parts of joints shall be coated in the field with coal tar epoxy equal to Kop-Coat Bitumastic No. 300-M. For valves installed aboveground, the exterior ferrous parts of all valves shall be shop primed at the factory with one coat, minimum dry film thickness one and one-half (1.5) mils, of a primer with rust-inhibitive pigments and synthetic resins. Following installation aboveground valves shall be finish painted in accordance with manufacturer's recommendations.

2.12 SERVICE SADDLES AND CORPORATION STOPS

A. Service Saddles: Service saddles shall have ductile iron bodies in accordance with ASTM A 536, latest revision, with double stainless steel straps. Bodies shall be brass or ductile iron; body shall have a fusion bonded nylon coating with a minimum thickness of 12 mils. Straps shall be Type 304 stainless steel with premium grade Type 304 L stainless steel bolts and Type 304 stainless steel washers and nuts. The nuts shall be Teflon coated. The gasket material shall be an elastomeric compound resistant to degradation by oil, natural gas, acids, alkalies, most aliphatic fluids and leachate. The outlet of the saddle shall have NPT threads. Service saddles shall be Rockwell No. 317, Ford or an equal approved by the Engineer.

B. Corporation Stops: Corporation stops shall be all bronze construction in accordance with AWWA C80, latest revision. Inlet threads shall be NPT iron pipe threads and the outlet connections shall be of the packed joint type suitable for use with Schedule 80 PVC pipe. Corporation stops shall be Ford Ball Corp Type FB 1102, McDonald or an equal approved by the Engineer.

C. Polyethylene Tubing. Service tubing shall be nominal wall polyethylene tubing conforming to the requirements of ASTM D 2737 and AWWA C-901. Tubing shall be manufactured from prime virgin PE-3408 high density polyethylene (HDPE) resin. Each coil of tubing shall be spiral wrapped with four inch (4") wide black .004 polyethylene film with minimum two percent (2%) carbon black content to shield the tubing from ultraviolet and violet light. Reclaimed water service tubing shall be lavender in color.

D. Tubing shall be DR 9.0 CTS OD and supplied in 100 foot (100') rolls. Tubing shall conform to all requirements set forth in AWWA C901. Tubing shall be marked with the following information at not more than five foot (5') intervals: nominal size, material code designation, dimension ration and diameter base, AWWA pressure class, AWWA designation and manufacturer's name or trademark and product record code.

Attachment: Holly Hill LS_13 Rehabilitation_Bid Set Specifications_04.30.19 (2019-R-38 : Lift Station #13 Rehabilitation)

E. Fittings for use with polyethylene (PE) tubing shall be brass containing a pressure sealing O-ring and undirectional grip ring and shall be designed for “press-on” or “stab-on” installation, and manufactured by Ford Meter Box Company.

2.13 SOLENOID VALVES

A. Solenoid valves shall be two-way type for normally closed operation designed for not less than a 150-psi water working pressure. The valves shall have forged stainless steel Series 300 bodies for three-quarter inch (3/4") and smaller and brass bodies for one inch (1”) and larger with NPT threaded ends, Buna N seals/disks and NEMA 4X Red hat II solenoid enclosures. The valves shall operate on 120 VAC power, shall have threaded conduit hubs, standby manual operators and shall not require a minimum operating pressure differential for standby operation. The valves shall be provided with a manual override. The valves shall be Series 8210G for three-quarter inch (3/4") and smaller and Series 8221G for one inch (1") and larger as manufactured by Automatic Switch Company or approved equal.

2.14 FLEXIBLE EXPANSION JOINTS

A. Flexible expansion joints shall be of the molded wide arch design manufactured of chloroprene (neoprene) rubber with polyester reinforcement. Chloroprene (neoprene) body shall be supplied with a hypalon coating. Joints shall be flanged suitable for 150 psi water working pressure and in accordance with ANSI B16.1 dimensions and bolting patterns. Flanged ends shall be furnished and galvanized, split ductile iron retaining rings.

B. Provide limit restraint bolts on all pump suction and discharge lines. Expansion joints six inches (6") and larger in size shall have a minimum of four (4) limit restraint bolts. Restraint bolts and nuts shall be Type 304 stainless steel.

Attachment: Holly Hill LS_13 Rehabilitation_Bid Set Specifications_04.30.19 (2019-R-38 : Lift Station #13 Rehabilitation)

C. Minimum performance for flexible expansion joints shall be as follows:

Size (Inches)	Axial Compression (Inches)	Axial Elongation (Inches)	Lateral Deflection (Inches)	Angular Deflection (Degrees)
2	1-3/4	3/4	3/4	30
3	d.o.	d.o.	d.o.	30
4	d.o.	d.o.	d.o.	25
5	d.o.	d.o.	3/4	25
6	d.o.	d.o.	1	20
8	d.o.	d.o.	d.o.	20

D. Flexible expansion joints shall be Style 1015 Maxi-Joint as manufactured by General Rubber Corporation, Style 100 Metrasphere as manufactured by the Metraflex Company or an equal approved by the Engineer. Flexible joints for pump suction and discharge piping shall be designed for leachate service at 250°F.

2.15 PRESSURE GAUGE ASSEMBLIES

A. Pressure gauges shall have the following design features: glycerin filled, two-inch (2") dial, aluminum dial with black numerals on white background, Type 316 stainless steel bourdon tube and movement, 300 series stainless steel case and ring, safety glass lens, threaded lens retaining ring, adjustable pointer with over-pressure stop and zero pointer stop, blowout protection, two-inch (2") Type 316 stainless steel stem mounting and 1.0 percent (1.0%) accuracy based on full scale. Provide Type 316 stainless steel pressure snubbers on all gauges not protected by seals. Pressure gauges shall be as manufactured by U.S. Gauge, Ashcroft, Marshalltown, Marsh, or approved equal.

B. Pressure Gauge Service and Ranges: Pressure gauges shall be furnished for the following services with the indicated ranges. Diaphragm seals shall be furnished for gauges as indicated.

2.16 VALVE BOXES

A. Furnish, assemble, and place a valve box over the operating nut for each buried valve. The valve box shall be designed so as to prevent the transmission of surface loads directly to the valve or piping.

Attachment: Holly Hill LS_13 Rehabilitation_Bid Set Specifications_04.30.19 (2019-R-38 : Lift Station #13 Rehabilitation)

B. Valve boxes shall be of the adjustable slide type of suitable length with an interior diameter of not less than five inches (5"). The valve boxes shall be manufactured of cast iron and shall be of the two-piece design including a bottom section and top section with cover. The cast iron cover shall be shaped and labeled for the appropriate service designation. The top section shall be adjustable for elevation and shall be set to allow equal movement above and below finished grade.

C. The castings shall be manufactured of clean, even grain, gray cast iron conforming to ASTM A 48, Class 30B for Gray Iron Castings; and shall be smooth, true to pattern, free from blow holes, sand holes, projections, and other harmful defects. The seating surfaces of both the cover and the top section shall be machined so that the cover will not rock after it has been seated.

D. The valve boxes shall be coated inside and outside with an asphaltic coating prior to machining, so that the machined seating surfaces will be free of any coating. Cast iron valve box assemblies shall be Clow Corp. No F2452, Tyler Corp. Series 6855 or 6865 or an approved equal.

E. Valve extension stems shall be provided for all buried valves when operating nut is deeper than three feet (3') below final grade.

2.17 PIPE AND VALVE IDENTIFICATION SYSTEMS

A. Not Included.

2.18 GLOBE VALVES AND ANGLE VALVES

A. Globe valves and angle valves shall be suitable for throttling flows of liquid, oil, gas, and air lines. Valves shall have end connections as indicated on the Drawings and shall be suitable for a working pressure of not less than 150 psi.

B. Each valve shall have self-lubricating TFE-impregnated asbestos packing to provide a tight stem steel. Valves shall have a removable bonnet in order to facilitate dismantling and reassembly of the valves.

C. Globe valves shall be Crane Model No. 1, Stockham Valves Figures B-16, or equal. Angle valves shall be Crane Model No. 2, Stockham Valves Figure B-216, or equal.

2.19 TIE RODS

A. When prior approval is obtained from the Engineer, ductile iron pipe, fittings, and valves may be restrained using tie bolt joint restraint. Joint restraint materials for this method of restraint shall be the Super-Star SST Series Joint Restraint Joint System as manufactured by Star National Products, a Division of Star Industries, Inc., Columbus, Ohio, or an equal approved by the Engineer.

Attachment: Holly Hill LS_13 Rehabilitation_Bid Set Specifications_04.30.19 (2019-R-38 : Lift Station #13 Rehabilitation)

B. All bolts, nuts, washers, tie rods and other fasteners for the joint restraint system shall be manufactured of CORTEN high strength, low alloy, corrosion resistant steel in conformance with ASTM A 242. Tie bolts shall be manufactured of heat treated CORTEN steel. Tie rods and all fasteners for the system shall be galvanized in conformance with the requirements of ASTM A 123. Tie rods shall have a minimum diameter of three-quarter inch (3/4"). The number of tie rods required per joint shall be as recommended by the manufacturer.

C. Prior to backfilling after installation, all parts of the joint restraint system shall be coated with coal tar epoxy equal to Kop-Coat Bitumastic No. 300-M, for a minimum dry film thickness of 20 mils.

2.20 TAPPING SLEEVES AND VALVES

A. Tapping sleeves shall be designed for a water working pressure of 150 psi and shall be mechanical joint end type. Tap shall be done under pressure and without interruptions of service. Taps shall be tested at factory to 175 psi.

B. Tapping valves shall be as specified herein under Gate Valves.

C. The manufacturer shall furnish the services of a supervisor who will direct all operations for the installation of material, attachment of tapping machine and operation of the machine in making the connection. The Contractors shall bear all such rental and supervision costs, and all other related costs.

D. Tapping sleeves and valves shall be the product of one of the following manufacturers, or equal: Mueller, Clow, and M&H.

2.21 FLANGED ADAPTERS (WHEN APPLICABLE)

A. For joining plain end or grooved end pipe to flanged pipes and fittings.

B. Adapters shall conform in size and bolt hole placement to ANSI standards for steel and/or cast iron flanges 125- or 150-pound standard unless otherwise required for connections.

C. Exposed Sleeve Type:

1. Constructed from steel.

2. Coating: In accordance with manufacturer's recommendations.

3. Bolts: Carbon steel.

4. Acceptable Manufacturers:

Attachment: Holly Hill LS_13 Rehabilitation_Bid Set Specifications_04.30.19 (2019-R-38 : Lift Station #13 Rehabilitation)

a. Dresser Manufacturing Company - Style 128 for cast iron ductile iron and steel pipes with diameters of two inches (2") through 96 inches (96").
b. Or equal.

PART 3 – EXECUTION

3.01 INSPECTION

A. All pipe, fittings, valves, and other material shall be subject to inspection and approval by the Engineer after delivery, and no broken, cracked, imperfectly coated, or otherwise damaged or unsatisfactory material shall be used. When a defect or crack is discovered, the injured portion shall not be installed. Cracked pipe shall have the defect cut off at least 12 inches (12") from the break in the sound section of the barrel.

3.02 GENERAL INSTALLATION REQUIREMENTS

A. Pipe Cradle: Upon satisfactory installation of the pipe bedding material as specified, a continuous trough for the pipe barrel and recesses for the pipe bells or couplings shall be excavated by hand digging. When the pipe is laid in the prepared trench, true to line and grade, the pipe barrel shall receive continuous, uniform support and no pressure will be exerted on the pipe joints from the trench bottom.

B. Cover for underground piping shall not be less than that indicated on the Drawings. The minimum cover for pipe shall be 36 inches (36"). In areas where other piping conflicts preclude the maximum cover desired, the piping shall be laid to provide the maximum cover obtainable.

C. Pipe, fittings, valves, and accessories shall be installed as shown or indicated on the Drawings.

D. All connections to existing piping systems shall be made as shown or indicated on the Drawings after consultation and cooperation with authorities of the Owner.

E. Pipe Joint Deflection: Whenever it is desirable, and approved by the Engineer, to deflect pipe joints to avoid obstructions or to maintain required alignment, the amount of the joint deflection shall not exceed 80 percent (80%) of the maximum limits allowed by the pipe manufacturer.

F. In preparation for pipe installation, placement (stringing) of pipe should be as close to the trench as practical on the opposite side of the trench from the excavated material. The bell ends of the pipe should point in the direction of the work progress.

Attachment: Holly Hill LS_13 Rehabilitation_Bid Set Specifications_04.30.19 (2019-R-38 : Lift Station #13 Rehabilitation)

G. Pipe and fittings shall be laid accurately to the lines and grades indicated on Drawings or required. Where grades for the pipeline are not indicated on the Drawings, maintain a uniform depth of cover with respect to finish grade. Care shall be taken to insure a good alignment both horizontally and vertically and to give the pipe a firm bearing along its entire length. Any pipe which has its grade or joint disturbed after laying shall be taken up and relaid.

H. All pipe and fittings shall be cleared of sand, dirt, and debris before laying. All precautions shall be taken to prevent sand, dirt, or other foreign material from entering the pipe during installation. If necessary, a heavy, tightly woven canvas bag of suitable size shall be placed over each end of the pipe before lowering into the trench and left there until the connection is made to the adjacent pipe. Any sand, dirt, or other foreign material that enters the pipe shall be removed from the pipe immediately. Interior of all pipe and fittings shall be kept clean after installation until acceptable in the complete work.

I. Any time that pipe installation is not in progress, the open ends of pipe shall be closed by a watertight plug or other method approved by the Engineer. Plugs shall remain in pipe ends until all water is removed from the trench. No pipe shall be installed when trench conditions are unsuitable for such work, including standing water, excess mud, or rain.

J. After pipe has been laid, inspected, and found satisfactory, sufficient backfill shall be placed along the pipe barrel to hold the pipe securely in place while conducting the preliminary hydrostatic test. No backfill shall be placed over the joints until the preliminary test is satisfactorily completed, leaving them exposed to view for the detection of visible leaks.

K. Upon satisfactory completion of the hydrostatic test, backfilling of the trench shall be completed.

L. Aboveground and Exposed Piping: Piping shall be cut accurately to measurements established at the job site and shall be worked into place without springing or forcing, properly clearing all equipment access areas and openings. Changes in sizes shall be made with appropriate reducing fittings. Pipe connections shall be made in accordance with the details shown and manufacturer's recommendations. Open ends of pipe lines shall be properly capped or plugged during installation to keep dirt and other foreign material out of the system. Pipe supports and hangers shall be provided where indicated or as required to insure adequate support of the piping.

Attachment: Holly Hill LS_13 Rehabilitation_Bid Set Specifications_04.30.19 (2019-R-38 : Lift Station #13 Rehabilitation)

3.03 INSTALLATION OF DUCTILE IRON PIPE

A. Handling and Cutting Pipe:

1. Care shall be taken in handling, cutting, and laying ductile iron pipe and fittings to avoid damaging the pipe and interior coal tar epoxy or cement mortar lining, scratching, or marring machined surfaces, and abrasion of the pipe coating. All cracked pipe and fittings shall be removed at once from the work at no additional cost to the Owner.

2. Pipe cutting shall be done in a neat workmanlike manner without creating damage to the pipe and interior coal tar epoxy or cement mortar lining. Ductile iron pipe may be cut using an abrasive pipe saw, rotary wheel cutter, guillotine pipe saw, milling wheel saw or oxyacetylene torch. Cut ends and rough edges of ductile iron pipe shall be ground smooth. For push-on joint connections, the cut end shall be beveled to prevent gasket damage during joint assembly. Interior lining shall be repaired at cut ends per the manufacturer's instructions prior to joint assembly.

B. Laying Pipe and Fittings:

1. Bedding for Ductile Iron Pipe: Minimum bedding requirements shall be Type 2 as defined in ANSI/AWWA C600, latest revision. Provide proper bedding required, in accordance with thickness class of pipe being laid and depth of cover. Proper pipe laying conditions shall be in accordance with ANSI/AWWA C150 and C151, latest revision, and ANSI/AWWA C600, latest revision.

2. All ductile iron pipe and fittings shall be laid in accordance with American Water Works Association Standard ANSI/AWWA C600, latest revision, entitled "Standard for Installation of Ductile Iron Water Mains and Their Appurtenances", with the following sections specifically applying:

   a. Section 3.3 - Pipe Installation.
   b. Section 3.4 - Joint Assembly.

C. Ductile Iron Pipe Joints:

1. Type: The joints of all pipelines shall be made absolutely tight. The particular joint used shall be approved by the Engineer prior to installation. Where shown on the Drawings or where, in the opinion of the Engineer, settlement or vibration is likely to occur, all pipe joints shall be bolted mechanical type or restrained type as specified above, or as indicated on the Drawings.

Attachment: Holly Hill LS_13 Rehabilitation_Bid Set Specifications_04.30.19 (2019-R-38 : Lift Station #13 Rehabilitation)

2. Push-on Joints: Push-on joints shall be made in strict accordance with the manufacturer's recommendations. Lubricant, if required, shall be an inert, non-toxic, water soluble compound incapable of harboring, supporting, or culturing bacterial life. Manufacturer's installation recommendations shall be submitted to the Engineer for review and approval before commencing work. The bell of the pipe shall be cleaned of excess tar or other obstructions and wiped out before the cleaned and prepared spigot of the next pipe is inserted. The new pipe shall be shoved firmly into place until properly seated and held securely until the joint has been completed.

3. Mechanical Joint: All types of mechanical joint pipes shall be laid and jointed in full conformance with manufacturer's recommendations, which shall be submitted to the Engineer for review and approval before work is begun. Only skilled workmen shall be permitted to makeup mechanical joints. Torque wrenches, set as specified ion AWWA Standard C111, shall be used; or spanner type wrenches not longer than specified therein may be used without the permission of the Engineer.

4. Flanged Joints: Flanged joints shall be made up by inserting the gasket between the flanges. The threads of the bolts and the faces of the gaskets shall be coated with suitable lubricant immediately before installation.

5. Restrained Joints: Restrained joints shall be provided where indicated on the Drawings. Joint assembly shall be made in strict accordance with the manufacturer's instructions, which shall be submitted to the Engineer for review and approval before commencing work.

3.04 INSTALLATION OF PVC PIPE

A. Storage and Handling:

1. PVC pipe shall be delivered to the site in unbroken bundles packaged in such manner as to provide protection against damage. When possible, pipe should be stored at the job site in the unit packages until ready for use. Packaged units shall be handled using a forklift or a spreader bar with fabric straps. Packaged units shall not be stacked at the job site higher than two (2) units high.

2. When it is necessary to store PVC pipe for long periods of time, exposure to direct sunlight shall be prevented by covering the pipe with an opaque material. Adequate air circulation above and around the pipe shall be provided as required to prevent excessive heat accumulation. PVC pipe shall not be stored close to heat sources of hot objects such as heaters, fires, boiler, or engine exhaust. Pipe gaskets shall be protected from excessive exposure to heat, direct sunlight, ozone, oil, and grease. The

Attachment: Holly Hill LS_13 Rehabilitation_Bid Set Specifications_04.30.19 (2019-R-38 : Lift Station #13 Rehabilitation)

interior and all sealing surfaces of pipe, fittings, and other appurtenances shall be kept clean and free of dirt and foreign matter.

3. Care shall be taken in handling and laying pipe and fittings to avoid severe impact blows, crushing, abrasion damage, gouging or cutting. Pipe shall be lowered, not dropped, from trucks or into trenches. All cracked, damaged, or defective pipe and fittings, or any length of PVC pipe having a gouge, scratch, or other permanent indentation of more than 10 percent (10%) of the wall thickness in depth, shall be rejected and removed at once from the work and replaced with new acceptable pipe at no additional cost to the Owner.

B. Field Cutting PVC Pipe: Field cutting of pipe shall be done in a neat workmanlike manner without creating damage to the pipe. The pipe shall be cut square with a fine-toothed hand or power saw or other cutter or knife designed for use with plastic pipe. Prior to cutting, the pipe shall be marked around its entire circumference or a square in vise shall be used to ensure the pipe end is cut square. Remove burrs by smoothing edges with a knife, file, or sandpaper.

1. Field Cutting Bell and Spigot PVC Pipe: Bevel the cut end of the pipe using a pipe beveling tool, wood rasp, or portable sander to prevent damage to the gasket during joint assembly. A factory finished beveled end should be used as a guide to ensure proper beveling angle and correct depth of bevel. Round off any sharp edges on the leading edge of the bevel with a knife or file.

C. Laying PVC Pipe:

1. Pipe Bedding: Bedding for PVC pipe shall be as specified using granular pipe bedding material.

2. All PVC pipe shall be laid in accordance with the pipe manufacturer's published installation guide, the AWWA Manual of Practice No. M23 "PVC Pipe-Design and Installation" and the Uni-Bell Plastic Pipe Association Installation Recommendations.

D. PVC Pipe Joint Assembly for Rubber Gasketed Bell and Spigot Pipe:

1. The PVC bell and spigot joint shall be assembled in accordance with the pipe manufacturer's installation instructions. Clean the interior of the bell, the gasket, and the spigot of the pipe to be jointed with a rag to remove any dirt or foreign material before assembling. Inspect the gasket, pipe spigot bevel, gasket groove and sealing surfaces for damage or deformation.

Attachment: Holly Hill LS_13 Rehabilitation_Bid Set Specifications_04.30.19 (2019-R-38 : Lift Station #13 Rehabilitation)

2. Lubricate the spigot end of the pipe with a lubricant supplied or specified by the pipe manufacturer for use with gasketed PVC pipe in potable water systems. The lubricant should be supplied as specified by the pipe manufacturer. After then spigot end is lubricated, it must be kept clean and free of dirt and sand. If dirt and sand adhere to the lubricated end, the spigot must be wiped clean and re-lubricated.

3. Insert the spigot into the bell so that it contacts the gasket uniformly. Align the pipe sections and push the spigot end into the bell until the manufacturer's reference mark on the spigot is flush with the end of the bell. The pipe should be pushed into the bell using a bar and wood block. The joint shall not be assembled by "stabbing" or swinging the pipe into the bell, nor shall construction machinery be used to push the pipe into the bell.

4. If undue resistance to insertion of the spigot end is encountered or if the reference mark does not reach the flush position, disassemble the joint and check the position of the gasket. If the gasket is twisted or pushed out of its seat, inspect the components, repair or replace damaged items, clean the components, and repeat the assembly steps. Be sure the pipe is in proper alignment during assembly. If the gasket was not out of position, check the distance between the spigot end and the reference mark and relocate the mark if it is out of position.

E. PVC Pipe Joint Assembly for Threaded and Solvent Welded Pipe

1. All threaded and solvent welded joints shall be made watertight. All pipe cutting, threading and jointing procedures for threaded and solvent welded PVC pipe joints shall be in strict accordance with the pipe and fitting manufacturer's printed installation instructions. Thread lubricant for threaded joints shall be Teflon tape only.

2. At threaded joints between PVC and metal pipes, the metal side shall contain the socket end and the PVC side the spigot. A metal spigot shall not, under any circumstances, be screwed into a PVC socket.

F. PVC forcemains underground shall be strapped every 10 feet (10') or spiral wrapped with an insulated green No. 14 gauge copper ground wire for future location. The wire shall be stubbed out at each valve box or manhole.

3.05 FITTING INSTALLATION FOR UNDERGROUND PIPING

A. The weight of ductile iron fittings shall not be carried by the pipe on which they are installed. The fitting shall be supported by a concrete cradle as shown on the standard details. Concrete used for supports shall have a minimum compressive

Attachment: Holly Hill LS_13 Rehabilitation_Bid Set Specifications_04.30.19 (2019-R-38 : Lift Station #13 Rehabilitation)

strength of 3000 psi at 28 days. Concrete for support cradle shall be poured against undisturbed soil.

B. All glands, clamps, bolts, nuts, studs, and other uncoated parts of fitting joints for underground installation shall be coated with two coats, 10 mils DFT per coat, of coal tar epoxy equal to Kop-Coat Bitumastic No. 300-M.

3.06 CONCRETE PIPE ENCASEMENT

A. Concrete for concrete pipe encasement shall have a minimum strength of 3000 psi at 28 days and encasement shall be constructed in accordance with details shown on the Drawings. Encasement shall be constructed where:

1. Indicated on the Drawings.

2. The Engineer shall order the pipeline encased.

B. The points of beginning and ending of concrete pipe encasement shall be not more than six inches (6") from a pipe joint to protect the pipe from cracking due to uneven settlement of its foundation or the effects of superimposed live loads. Pipe shall be wrapped in visqueen.

C. Pipe encasement shall provide a minimum coverage of six inches (6") all around the pipe including pipe bells.

3.07 INSTALLATION OF PIPE SLEEVES, WALL CASTINGS AND COUPLINGS

A. Pipe sleeves and wall castings shall be provided at the locations called for on the Drawings. These units shall be as detailed and of the material as noted on the Drawings. They shall be accurately set in the concrete or masonry to the elevations shown. All wall sleeves and castings required in the walls shall be in place when the walls are poured. Ends of all wall castings and wall sleeves shall be of a type consistent with the piping to be connected to them.

B. Link seals for wall sleeves shall be installed in strict accordance with the manufacturer's printed installation instructions. For watertight applications in tanks or treatment units, the link seal installation shall be tested hydrostatically for leaks at the same time as the tank or treatment unit. Any leaks that occur during the test period shall be repaired by checking the link seals for proper installation and replacement of unit(s) found to be defective at no additional cost to the Owner.

C. Pipe couplings shall be installed in strict accordance with the manufacturer's published instructions and recommendations.

Attachment: Holly Hill LS_13 Rehabilitation_Bid Set Specifications_04.30.19 (2019-R-38 : Lift Station #13 Rehabilitation)

3.08 INSTALLATION OF VALVES

A. Valves of the size and type shown on the Drawings shall be set plumb and installed at the locations indicated on the Drawings. Valves shall be installed in accordance with manufacturer's installation instructions and with the Details shown on the Drawings.

B. Valves shall be installed such that they are supported properly in their respective positions, free from distortion and strain. Valves shall be installed such that their weight is not borne by pumps and equipment that are not designed to support the weight of the valve.

C. Valves shall be carefully inspected during installation; they shall be opened wide and then tightly closed and the various nuts and bolts shall be tested for tightness. Special care shall be taken to prevent any foreign matter from becoming lodged in the valve seat. Check and adjust all valves for smooth operation.

D. Install valves with the operating stem in either horizontal or vertical position.

E. Allow sufficient clearance around the valve operator for proper operation.

F. Clean iron flanges by wire brushing before installing flanged valves. Clean carbon steel flange bolts and nuts by wire brushing, lubricate threads with oil or graphite, and tighten nuts uniformly and progressively. Clean threaded joints by wire brushing or swabbing. Apply Teflon joint compound or Teflon tape to pipe threads before installing threaded valves. Joints shall be watertight.

G. For buried valves, a valve box shall be centered accurately over the operating nut and the entire assembly shall be plumb. The tops of valve boxes shall be adjusted to the proper elevation as specified below and as shown on the Drawings.

1. In paved areas, tops of valve box covers shall be set flush with pavement. Following paving operations, a 16-inch (16") square shall be neatly cut in the pavement around the box and the paving removed. The top of the box shall then be adjusted to the proper elevation and a 30-inch (30") square by six inch (6") thick concrete pad poured around the box cover. Concrete pads in traffic areas shall be reinforced with No. 4 reinforcement bars as shown on the Drawings. Concrete for the pad shall be 3000 psi compressive strength.

2. In unpaved areas, tops of valve box covers shall be set two inches (2") above finished grade. After the top of the box is set to the proper elevation, a 16-inch (16") square by six-inch (6") thick concrete pad shall be poured around the box cover. Concrete for the pad shall be 3000 psi compressive strength.

Attachment: Holly Hill LS_13 Rehabilitation_Bid Set Specifications_04.30.19 (2019-R-38 : Lift Station #13 Rehabilitation)

H. Valves shall be tested hydrostatically, concurrently with the pipeline in which they are installed. Protect or isolate any parts of valves, operators, or control and instrumentation system whose pressure rating is less than the pressure test(s). If valve joints leak during pressure testing, loosen, or remove the nuts and bolts, reseat or replace the gasket, reinstall or retighten the bolts and nuts and hydrostatically retest the joints.

I. Following installation, all aboveground valves shall be painted in accordance with the painting system specified in accordance with manufacturer's recommendations. Following installation of buried valves or valves installed in valve vaults, repair any scratches, marks, and other types of surface damage, etc., with a coating equal to the original coating supplied by the manufacturer. Prior to backfilling, all nuts, bolts, and other parts of the valve joints shall be coated with two (2) coats, 10 mils DFT per coat, of coal tar epoxy equal to Kop-Coat Bitumastic No. 300-M.

3.09 SEPARATION OF NON-POTABLE WATER MAINS AND POTABLE WATER MAINS

A. Reclaimed water mains shall be installed with at least a three foot (3') horizontal separation from any potable water main. Force mains and gravity sewers shall have a six-foot (6') separation from potable mains. At crossings, the installation shall provide of a minimum vertical separation distance of 12 inches (12") between the outside of the crossing non-potable and potable water mains. This separation shall be provided where the potable water main is either below or above the non-potable water main. When the 12-inch (12") minimum vertical separation distance cannot be maintained, the potable water main shall be encased in concrete. Concrete encasement shall be as specified above. The potable water main shall be encased for ten feet (10') each way of the crossing.

3.10 MAIN CLEANING AND FLUSHING

A. Following the hydrostatic and leakage tests, all the mains constructed under this contract shall be cleaned and flushed to remove sand, loose dirt, and other debris. Flushing velocity shall be a minimum of two and one-half (2.5) fps. Flushing shall continue until clean water flows from the main. However, the Contractor shall endeavor to use the minimum amount of flushing water required to complete the work. To increase the efficiency of the cleaning and flushing operation, the Contractor shall use a pipeline pigging device of the proper size and designed to clean the intended pipeline. The pigging device shall be capable of turning through a standard 90 degree (90°) MJ bend. The type of pipeline pigging device and the method of operation shall be approved by the Engineer.

B. Upon completion of testing for the gravity drain line system, drain lines shall be flushed to remove dirt, sand, stones, and other debris which may have entered the lines during construction and settled out in the lines and manholes. Materials and

Attachment: Holly Hill LS_13 Rehabilitation_Bid Set Specifications_04.30.19 (2019-R-38 : Lift Station #13 Rehabilitation)

debris flushed from the drain lines shall be removed from a downstream manhole or basin and disposed of at an approved disposal area.

C. Water for flushing shall be clean water provided by the Contractor from a source approved by the Engineer and the owner prior to beginning connections for flushing operations. Flushing shall only be completed upon approval by the Owner.

D. Temporary blowoffs may be required for the purpose of flushing mains. Temporary blowoffs shall be installed as close as possible to the ends of the main being flushed. Blowoffs installed on the main shall be the same diameter as the main. Temporary blowoffs shall be removed and plugged after the main is flushed. All costs for installing and removing temporary blowoffs shall be at no additional cost to the Owner.

E. The Owner shall be notified at least three (3) working days prior to flushing mains.

F. Blowoffs and temporary drainage piping used for flushing shall not be discharged into any gravity sewer or pumping station wetwell. The Contractor shall obtain prior approvals from the Engineer and the Owner as to the methods and locations of flushing water discharge.

3.11 INSTALLATION OF TIE RODS

A. Tie rods shall be installed in strict accordance with the manufacturer's written installation requirements. Unless otherwise indicated on the Drawings, the size and number of tie rods for a joint or installation shall be as recommended by the manufacturer’s design chart for a working pressure of 150 psi.

B. Following installation and prior to backfilling, all parts of the tie rod joint restraint system, including tie rods, tie bolts, nuts, washers, and other fasteners, shall be coated with two (2) coats, 10 mils DFT per coat, of coal tar epoxy equal to Kop-Coat Bitumastic No. 300-M.

3.12 INSTALLATION OF REDUCED PRESSURE BACKFLOW PREVENTERS

A. Backflow preventers shall be installed at the locations shown on the Drawings. Backflow preventers shall be installed in accordance with the manufacturer’s written installation instructions and as shown on the Drawings.

B. Reduced pressure principle backflow preventers shall be installed horizontally with an 18-inch (18") minimum clearance between the finished grade and the lowest point on the bottom of the unit. Reduced pressure backflow preventers shall be installed with provisions for a suitable drain arrangement to drain off discharges from the relief valve, so that discharges are not objectionable.

Attachment: Holly Hill LS_13 Rehabilitation_Bid Set Specifications_04.30.19 (2019-R-38 : Lift Station #13 Rehabilitation)

Backflow preventers shall be installed such that they are easily accessible for testing, maintenance, and repair.

C. Piping and fittings for units three inches (3") and larger in size shall have flanged joints. Piping, fittings, and valves shall be properly supported with pipe support stands as shown on the Drawings.

D. Following installation of the reduced pressure backflow preventer, piping, fittings and valves, the entire aboveground assembly shall be finished painted in accordance with manufacturer's recommendations.

END OF SECTION

Attachment: Holly Hill LS_13 Rehabilitation_Bid Set Specifications_04.30.19 (2019-R-38 : Lift Station #13 Rehabilitation)

Project: Lift Station #13 Rehabilitation
Client: City of Holly Hill – Walt Smyser
Bid No.: 19WW05

M&H Project Manager: Kevin Lee, PE
M&H Project No.: 1000710-181066.01

Bid Opening June 6, 2019

	CONTRACTOR	BASE BID	BID ALT 1	TOTAL BID
1	DANUS UTILITIES, INC. Sanford, FL	$ 240,430.00	$ 20,700.00	**$ 261,130.00**
2	MCMAHAN CONSTRUCTION, INC. DeLand, FL	$ 256,800.00	$ 16,000.00	**$ 272,800.00**
3	CAIN ENTERPRISES LLC dba ENGINEERING SOLUTIONS INTERNATIONAL Ocala, FL	$ 237,820.00	$ 36,778.00	**$ 274,598.00**
4	J&H WATERSTOP UTILITIES, INC. Orange City, FL	$ 283,200.00	$ -	**$ 283,200.00**
5	CONSTANTINE CONSTRUCTORS, INC. Fort Walton Beach, FL	$ 285,656.75	$ 12,928.71	**$ 298,585.46**
6	WPC INDUSTRIAL CONTRACTORS, LLC Jacksonville, FL	$ 267,092.00	$ 32,000.00	**$ 299,092.00**
7	THADCON LLC Daytona Beach, FL	$ 275,900.00	$ 24,232.00	**$ 300,132.00**
8	UTILITY TECHNICIANS, INC. Umatilla, FL	$ 274,181.00	$ 40,825.00	**$ 315,006.00**
9	HINTERLAND GROUP, INC. Riviera Beach,FL	$ 293,000.00	$ 24,500.00	**$ 317,500.00**
10	RCM UTILITIES, LLC Eustis, FL	$ 331,086.00	$ 26,306.00	**$ 357,392.00**
11	FORCE ENTERPRISES, INC. Palm Beach, FL	$ 399,781.00	$ 15,000.00	**$ 414,781.00**

FLORIDA DEPARTMENT OF Environmental Protection

Central District
3319 Maguire Boulevard, Suite 232
Orlando, Florida 32803-3767

Ron DeSa
Governor

Jeanette Nuñez
Lt. Governor

Noah Valenstein
Secretary

NOTIFICATION OF ACCEPTANCE OF USE OF A GENERAL PERMIT

PERMITTEE:		**PERMIT NUMBER:**	0202632-022-DWC/CG
Walt Smyser, Deputy Director		**ISSUE DATE:**	05/06/2019
City of Holly Hill Public Works		**EXPIRATION DATE:**	05/05/2024
453 LGPA Boulevard		**COUNTY:**	Volusia
Holly Hill, Florida 32117		**PROJECT NAME:**	City of Holly Hill Lift Station #13 Rehabilitation
		CONNECTED TO:	City of Holly Hill
Email: swmyser@hollyhillfl.org		**FACILITY ID:**	FL0027677-014-DW1P

Dear Mr. Smyser:

This letter acknowledges receipt of your Notification/Application for Constructing a Domestic Wastewater Collection/Transmission System for the subject project. Our office received the Notice on 05/06/2019. This project includes: A) Replacement of Lift Station #13 including the conversion of existing can-type lift station to a duplex submersible lift station.

This is to advise you that the Department does not object to your use of such General Permit.

Please note the attached requirements apply to your use of this General Permit for constructing the proposed domestic wastewater collection/transmission system.

You are further advised that the construction activity must conform to the description contained in your Notification/Application for Constructing a Domestic Wastewater Collection/Transmission System and that any deviation will subject the permittee to enforcement action and possible penalties.

Sincerely,

Charles LeGros
Environmental Manager
Permitting and Waste Cleanup Program

CRL/AMC

cc: Kevin A. Lee, P.E., Mead and Hunt, Inc., kevin.lee@meadhunt.com
Charles LeGros, DEP, Charles.LeGros@dep.state.fl.us
Allison Chancy, DEP , Allison.Chancy@FloridaDEP.gov

REQUIREMENTS FOR USE OF THE GENERAL PERMIT FOR DOMESTIC WASTEWATER COLLECTION/TRANSMISSION SYSTEMS:

1. This general permit is subject to the general permit conditions of Rule 62-4.540, F.A.C., as applicable. This rule is available at the Department's Internet site at: http://www.dep.state.fl.us/legal/Rules/shared/62-4/62-4.pdf [62-4.540]

2. This general permit does not relieve the permittee of the responsibility for obtaining a dredge and fill permit where it is required. [62-604.600(6)(b)1]

3. This general permit cannot be revised, except to transfer the permit. [62-604.600(6)(b)2]

4. This general permit will expire five years from the date of issuance. If the project has been started and not completed by that time, a new permit must be obtained before the expiration date in order to continue work on the project. [62-4.030]

5. Upon completion of construction of the collection/transmission system project, and before placing the facilities into operation for any purpose other than testing for leaks or testing equipment operation, the permittee shall submit to the Department's Central District Office Form 62-604.300(8)(b), Request for Approval to Place a Domestic Wastewater Collection/Transmission System into Operation. This form is available at the Department's Internet site at: http://www.dep.state.fl.us/water/wastewater/dom/dw-forms.htm. [62-604.700(2)]

   Please submit the entire clearance document package in electronic format to DEP_CD@dep.state.fl.us, with a copy to Allison.Chancy@FloridaDEP.gov. If the file is very large, you may post it to the Wastewater Electronic Applications folder on the following ftp site at:

   ftp://ftp.dep.state.fl.us/pub/wastewater/

   After posting the document, send an e-mail to DEP_CD@dep.state.fl.us, with a copy to Allison.Chancy@FloridaDEP.gov, alerting us that it has been posted. Any submitted drawings (should be sized 11" x 17") and the engineer of record's signed seal and dates on the required document must be legible for acceptance.

   For further clarification contact:
   Allison Chancy, (407) 897-2968
   3319 Maguire Blvd, Suite 232
   Orlando, Florida 32803-3767

6. The new or modified collection/transmission facilities shall not be placed into service until the Department clears the project for use. [62-604.700(3)]

7. Abnormal events shall be reported to the Department's Central District Office in accordance with Rule 62-604.550, F.A.C. For unauthorized spills of wastewater in excess of 1000 gallons per incident, or where information indicates that public health or the environment may be endangered, oral reports shall be provided to the STATE WATCH OFFICE TOLL FREE NUMBER (800)320-0519 as soon as practical, but no later than 24 hours from the time the permittee or other designee becomes aware of the circumstances. Unauthorized releases or spills less than 1000 gallons per incident are to be reported orally to the Department's Central District Office within 24 hours from the time the permittee, or other designee becomes aware of the circumstances. [62-604.550]

Addendum 1

Project name:	Lift Station #13 Rehabilitation	Client:	City of Holly Hill
Project location:	Holly Hill	Client representative:	Walt Smyser
Project number:	RFQ 19-WW-05	Mead & Hunt, Inc. manager:	Kevin A. Lee
Date:	May 10, 2019	Mead & Hunt Inc. phone:	(386) 761-6810

TO ALL BIDDERS: You are requested to make all changes and/or additions contained in this Addendum to the Bidding Documents. Failure to acknowledge this Addendum in Proposal shall result in rejection of bid.

I. GENERAL

A. FDEP General Permit for Domestic Wastewater Collection/Transmission is included with this addendum. The Contractor shall comply with all conditions of the permit.

BID DATE AND TIME SHOULD CORRESPOND TO DATE AND TIME INDICATED IN ADVERTISEMENT FOR BIDS, UNLESS DATE AND TIME HAS BEEN CHANGED IN THIS OR PREVIOUS ADDENDUMS.

QUESTIONS

1. What are the approximate lengths, sizes and types of the pipes to be installed on the project?

   Answer: Refer to Plan Set for specifics regarding piping.

2. Are there any portions of the project that will need to be Bored?

   Answer: No

3. Are the crossings to be Jack & Bored or Directionally Bored?

   Answer: This project does not have any crossings.

4. What are the approximate lengths and diameters of the portions to be bored?

   Answer: N/A, see question two above.

Attachment: Holly Hill Lift Station 13 - Addendum 1 (2019-R-38 : Lift Station #13 Rehabilitation)

5. How much is the required bid bond for the project?

   Answer: Invitation to Bid states, a certified check or bank draft, payable to the City of Holly Hill, Florida, or a satisfactory bid bond executed by the Bidder and an acceptable surety, in an amount equal to five percent (5%) of the bid, shall be submitted with each bid.

6. How much is the cost estimate of the project?

   Answer: $292,000.00

7. Do you have any further details you wish to provide?

   Answer: See Plans and Specifications for any further details.

END OF ADDENDUM

Disclaimer: This addendum was posted on Vendor Link. It is the sole responsibility of the bidder to confirm that all addenda have been received prior to submitting bid and acknowledge such in the bid documents.

Attachment: Holly Hill Lift Station 13 - Addendum 1 (2019-R-38 : Lift Station #13 Rehabilitation)

FLORIDA DEPARTMENT OF Environmental Protection

Central District
3319 Maguire Boulevard, Suite 232
Orlando, Florida 32803-3767

Ron DeSa
Governor

Jeanette Nuñez
Lt. Governor

Noah Valenstein
Secretary

NOTIFICATION OF ACCEPTANCE OF USE OF A GENERAL PERMIT

PERMITTEE:		**PERMIT NUMBER:**	0202632-022-DWC/CG
Walt Smyser, Deputy Director		**ISSUE DATE:**	05/06/2019
City of Holly Hill Public Works		**EXPIRATION DATE:**	05/05/2024
453 LGPA Boulevard		**COUNTY:**	Volusia
Holly Hill, Florida 32117		**PROJECT NAME:**	City of Holly Hill Lift Station #13 Rehabilitation
		CONNECTED TO:	City of Holly Hill
Email:	swmyser@hollyhillfl.org	**FACILITY ID:**	FL0027677-014-DW1P

Dear Mr. Smyser:

This letter acknowledges receipt of your Notification/Application for Constructing a Domestic Wastewater Collection/Transmission System for the subject project. Our office received the Notice on 05/06/2019. This project includes: A) Replacement of Lift Station #13 including the conversion of existing can-type lift station to a duplex submersible lift station.

This is to advise you that the Department does not object to your use of such General Permit.

Please note the attached requirements apply to your use of this General Permit for constructing the proposed domestic wastewater collection/transmission system.

You are further advised that the construction activity must conform to the description contained in your Notification/Application for Constructing a Domestic Wastewater Collection/Transmission System and that any deviation will subject the permittee to enforcement action and possible penalties.

Sincerely,

Charles LeGros
Environmental Manager
Permitting and Waste Cleanup Program

CRL/AMC

cc: Kevin A. Lee, P.E., Mead and Hunt, Inc., kevin.lee@meadhunt.com
Charles LeGros, DEP, Charles.LeGros@dep.state.fl.us
Allison Chancy, DEP , Allison.Chancy@FloridaDEP.gov

Attachment: Holly Hill Lift Station 13 - Addendum 1 (2019-R-38 : Lift Station #13 Rehabilitation)

REQUIREMENTS FOR USE OF THE GENERAL PERMIT FOR DOMESTIC WASTEWATER COLLECTION/TRANSMISSION SYSTEMS:

1. This general permit is subject to the general permit conditions of Rule 62-4.540, F.A.C., as applicable. This rule is available at the Department's Internet site at: http://www.dep.state.fl.us/legal/Rules/shared/62-4/62-4.pdf [62-4.540]

2. This general permit does not relieve the permittee of the responsibility for obtaining a dredge and fill permit where it is required. [62-604.600(6)(b)1]

3. This general permit cannot be revised, except to transfer the permit. [62-604.600(6)(b)2]

4. This general permit will expire five years from the date of issuance. If the project has been started and not completed by that time, a new permit must be obtained before the expiration date in order to continue work on the project. [62-4.030]

5. Upon completion of construction of the collection/transmission system project, and before placing the facilities into operation for any purpose other than testing for leaks or testing equipment operation, the permittee shall submit to the Department's Central District Office Form 62-604.300(8)(b), Request for Approval to Place a Domestic Wastewater Collection/Transmission System into Operation. This form is available at the Department's Internet site at: http://www.dep.state.fl.us/water/wastewater/dom/dw-forms.htm. [62-604.700(2)]

   Please submit the entire clearance document package in electronic format to DEP_CD@dep.state.fl.us, with a copy to Allison.Chancy@FloridaDEP.gov. If the file is very large, you may post it to the Wastewater Electronic Applications folder on the following ftp site at:

   ftp://ftp.dep.state.fl.us/pub/wastewater/

   After posting the document, send an e-mail to DEP_CD@dep.state.fl.us, with a copy to Allison.Chancy@FloridaDEP.gov, alerting us that it has been posted. Any submitted drawings (should be sized 11" x 17") and the engineer of record's signed seal and dates on the required document must be legible for acceptance.

   For further clarification contact:
   Allison Chancy, (407) 897-2968
   3319 Maguire Blvd, Suite 232
   Orlando, Florida 32803-3767

6. The new or modified collection/transmission facilities shall not be placed into service until the Department clears the project for use. [62-604.700(3)]

7. Abnormal events shall be reported to the Department's Central District Office in accordance with Rule 62-604.550, F.A.C. For unauthorized spills of wastewater in excess of 1000 gallons per incident, or where information indicates that public health or the environment may be endangered, oral reports shall be provided to the STATE WATCH OFFICE TOLL FREE NUMBER (800)320-0519 as soon as practical, but no later than 24 hours from the time the permittee or other designee becomes aware of the circumstances. Unauthorized releases or spills less than 1000 gallons per incident are to be reported orally to the Department's Central District Office within 24 hours from the time the permittee, or other designee becomes aware of the circumstances. [62-604.550]

Addendum 2

Project name:	Lift Station #13 Rehabilitation	Client:	City of Holly Hill
Project location:	Holly Hill	Client representative:	Walt Smyser
Project number:	RFQ 19-WW-05	Mead & Hunt, Inc. manager:	Kevin A. Lee
Date:	May 30, 2019	Mead & Hunt Inc. phone:	(386) 761-6810

TO ALL BIDDERS: You are requested to make all changes and/or additions contained in this Addendum to the Bidding Documents. Failure to acknowledge this Addendum in Proposal shall result in rejection of bid.

I. GENERAL

1. Specification 00 31 00 Schedule of Unit Prices – Revised specification attached.
2. Specification 01 22 00 Unit Prices – Revised specification attached.
3. Specification 33 01 30.83 Wetwell Lining Systems – Paragraph 3.02 Acceptable Manufacturers revised to include Spectrashield, Raven, and GML
4. Plan Sheet C-301 Note 7 – DR11 HDPE Pipe is acceptable.
5. Plan Sheet E-001
    a. Four conduits to wetwell shall be 2”.
    b. 1-1/2” Unistrut is acceptable.
6. Existing forcemain valves to be open and abandoned in place and valve box removed.

BID DATE AND TIME SHOULD CORRESPOND TO DATE AND TIME INDICATED IN ADVERTISEMENT FOR BIDS, UNLESS DATE AND TIME HAS BEEN CHANGED IN THIS OR PREVIOUS ADDENDUMS.

QUESTIONS

1. Is power available for bypass pumping?

   Answer: Yes, single phase 240V is available.

2. There is no riprap quantity given for ditch bank. How will this be paid for?

   Answer: See revised specification sections 00 31 00 Schedule of Unit Prices and 01 22 00 Unit Prices included in this addendum.

Attachment: Holly Hill Lift Station 13 - Addendum 2 (2019-R-38 : Lift Station #13 Rehabilitation)

3. What is the reason for location of bypass pumping system?

   Answer: Location was proposed to be outside of work area. Location can be moved upon agreement between Owner, Contractor, and Engineer.

4. For the HDPE pipe SDR9 pipe and fittings are not that common and have very long lead times. Would DIPS SDR 11 be acceptable? As this type and size is common.

   Answer: DR11 is acceptable.

5. Check valves – the plans call for a cushioned check valve (sheet C-301), However the specs call for a swing check valve (46 05 04 – 17 sect 2.11). Which is needed?

   Answer: Specification 46 05 04 Paragraph 2.11 is correct. Check valve shall have exterior swing arm with weight. No cushion required.

6. HDPE pipe – the plans call for 4” DR9, but they do not specify if that is to be DIPS or IPS OD pipe. Please Can the pipe be solid black?

   Answer: HDPE shall be DIPS. Solid black pipe is acceptable.

7. Is there a functional isolation valve on the 4” force main?

   Answer: Yes.

8. Where does the force main pump to and how much static pressure is on it?

   Answer: Force main discharges to a gravity collection system. No other lift stations are manifolded to force main.

9. How many gallons per day does this lift station see?

   Answer: Estimated daily flow = 60,000-100,000 GPD

10. Utility power meter not shown on the print. Are we to use the existing meter?

    Answer: See Plan Sheet E-001 Note 14 – Provide new electrical meter.

11. Prints show 4- 1" conduits to the wetwell. Is this going to be adequate for the pump leads and floats?

    Answer: Conduits shall be 2”.

12. There are no seal-offs shown in the conduits to the wetwell but they are referenced in the notes. Please clarify.

    Answer: Conduit seals are shown on Plan Sheet E-001 between the control panel and terminal box.

13. Prints call out 2" Unistrut. Can 1-1/2" trade size be substituted?

    Answer: Yes 1-1/2" Unistrut is acceptable.

14. Conduit type not specified to the wetwell. please specify.

    Answer: See Plan Sheet E-001 Note 4.

15. Would you provide me the Street Address for the Lift Station in Holly Hill?

    Answer: A nearby address is 397 Dubs Dr. Holly Hill, FL. 32117

END OF ADDENDUM

Disclaimer: This addendum was posted on Vendor Link. It is the sole responsibility of the bidder to confirm that all addenda have been received prior to submitting bid and acknowledge such in the bid documents.

Attachment: Holly Hill Lift Station 13 - Addendum 2 (2019-R-38 : Lift Station #13 Rehabilitation)

SECTION 00 31 00
SCHEDULE OF UNIT PRICES

CITY OF HOLLY HILL
LIFT STATION #13 REHABILITATION
BID# 19WWXX

ITEM NO.	*DESCRIPTION*	*QTY*	*UNIT*	*UNIT COST*	*TOTAL*
1	Preconstruction Video	1	LS		
2	Demolition	1	LS		
3	Bypass Pumping	1	LS		
4	Complete Lift Station	1	LS		
5	Electrical	1	LS		
6	Tie-Ins				
	a) Tie-In to Existing Force Main	1	LS		
7	DIP Fittings Add or Delete	1000	LBS		
8	Cap and Abandon Existing Old Force Main	1	LS		
9	Permits and Allowances	1	LS	$10,000.00	
10	As-Built Plans	1	LS		
11	MOT	1	LS		
12	Restoration	1	LS		
13	Rock Rip Rap Bank Protection incl. Bedding Rock & Filter Fabric	36	SY		
				BID TOTAL	

Submitted by: _____

Contractor: _____

Address: _____

Telephone: _____ Fax: _____

State of Florida Certified General Contractor or Underground Contractor (Required Information)

Licensee: _____ License No: _____

Attachment: Holly Hill Lift Station 13 - Addendum 2 (2019-R-38 : Lift Station #13 Rehabilitation)

SECTION 01 22 00

UNIT PRICES

PART 1 – GENERAL

A. Separate payment will be made only for the items of work described herein and listed on the Bid Form. Any related work not specifically listed, but required for satisfactory completion of the work, shall be considered to be included in the scope of the appropriate listed work items.

B. The CONTRACTOR's attention is called to the fact that cleanup is considered a part of the work of construction. No payment will be made until cleanup is essentially complete.

C. No separate payment will be made for the following items and the cost of such work shall be included in the applicable pay items of work if not shown as a separate pay item.

1. Clearing and Grubbing.

2. Excavation, including necessary pavement base removal.

3. Shoring and sheeting.

4. Dewatering and disposal of surplus water.

5. Structural Fill.

6. Backfill.

7. Grading.

8. Replacement of unpaved roadways, grass, and shrubbery plots.

9. Cleanup.

10. Testing and placing system in operation.

11. Any material and equipment required to be installed and utilized for the test.

12. Pipe, structures, pavement replacement and/or appurtenances included within the limits of lump sum work.

13. Maintaining the existing quality of service during construction.

Attachment: Holly Hill Lift Station 13 - Addendum 2 (2019-R-38 : Lift Station #13 Rehabilitation)

14. Appurtenant work as required for a complete and operable system.

15. Maintaining or detouring of traffic.

D. No payment shall be made for work constructed outside the authorized limits of work

PART 2 – MATERIALS AND EQUIPMENT

2.01 Pre-Construction Video **Bid Item 1**

Lump sum payment will be made based on delivery to the City of two copies with documentation of the video for the project route. The contract lump sum price shall be full compensation for all materials and work necessary to complete the professional videotaping in accordance with the project specifications. Construction work shall not start until DVD's are delivered and approved by the project representative.

2.02 Demolition of Existing Lift Station **Bid Item 2**

Lump sum payment shall be made for the demolition, removal, abandonment, filling, and/or other work to existing facilities as shown on the plans and as required to complete the required work. Restoration, including fill required, shall be included. Demolished facilities shall be shown on the as-builts. City shall have right to all abandoned equipment. CONTRACTOR shall deliver to City or dispose of properly. CONTRACTOR is responsible for proper disposal of all removed materials.

2.03 Bypass Pumping **Bid Item 3**

Lump sum payment will be made at the completion of the operational lift station for temporary bypass pumping. The bypass pumping system shall be duplex pumps and each pump shall be capable of passing the flows with one unit on standby. Temporary systems shall be automatic float operated and switch over to standby, have cellular alarm notification, and have a noise level no greater than 70 dba at seven (7) meters.

2.04 Complete Lift Station **Bid Item 4**

Lump sum payment will be made for the pumps, rails, top slab, hatch, new wetwell, valves, valve vault, yard piping, mechanical equipment, restoration, and all other items necessary for a complete installation. This includes all materials, equipment and labor required to construct the station as shown on the plans and described in the specifications.

2.05 Electrical **Bid Item 5**

Lump sum payment shall be made for the installation of all Electrical equipment as shown on the plans and described in the specifications. Payment will be full compensation for furnishing all plant labor, materials, equipment, and electrical work to integrate and connect the new motors, lighting, control panels, junction boxes, cables, wiring, and miscellaneous components required

Attachment: Holly Hill Lift Station 13 - Addendum 2 (2019-R-38 : Lift Station #13 Rehabilitation)

to complete all electrical work in accordance with the contract plans, specifications, the National Electric Code and FBC. CONTRACTOR shall obtain requisite electrical permits prior to commencement of work.

2.06 Tie-Ins **Bid Item 6**

Payment will be made at the applicable unit price for the cost of the "tie-in" performed. The lump sum price will be full compensation for all pipe, valves, fittings, materials and labor required to satisfactorily accomplish this item as detailed in the plans and specifications.

2.07 DIP Fittings (Add or Delete) **Bid Item 7**

Payment shall be made at the contract unit price per pound for all ductile iron/cast iron fittings installed by the CONTRACTORs as directed by the ENGINEER. This item is included in the CONTRACTOR cover the cost of additional fittings that are not shown on the project plans which are required to meet modified routing due to field conditions. This item includes the cost of providing and installing "restrained joints" at both ends of each additional fitting installed.

2.08 Cap and Abandon Existing Force Main **Bid Item 8**

Lump sum payment shall be made for satisfactory abandonment of the existing lines as shown on the plans. Payment shall be full compensation for grouting the abandoned portion of the existing force main as shown on the plans.

2.09 Permit Allowance **Bid Item 9**

An allowance is established to pay costs associated with building permit fees and ancillary costs associated with construction of the lift station improvements. No provisions for mark-up are included within the allowance.

2.10 As-Built Plans **Bid Item 10**

Lump sum payment will be made based on delivery of record drawings produced by a licensed surveyor conforming to the specifications. Periodical record drawings shall be submitted with each pay estimate on which the ENGINEER shall rely to ensure the improvements are constructed in accordance with the design locations and elevations. Progress payments submitted without updated record drawings to document work constructed that pay period shall be a basis for rejection of the pay request until such time as adequate record drawings are submitted.

2.11 MOT **Bid Item 11**

Payment for traffic control will be made at the contract lump sum price which price and payment shall be full compensation for the material, labor, equipment, and all other related work necessary to complete required traffic control during the period of construction affecting the flow of traffic within the project area or adjacent collector roads and highways. This item shall include the costs to prepare approved traffic control plans as well as the full cost to implement

Attachment: Holly Hill Lift Station 13 - Addendum 2 (2019-R-38 : Lift Station #13 Rehabilitation)

the approved plans. For areas under County or State control, traffic control shall be provided in accordance with each entity's requirements. Payment shall be made based on the percent of the total construction cost completed.

2.12 Restoration **Bid Item 12**

At the completion of construction, lump sum payment shall be made for site restoration to provide positive drainage, acceptable finish grades, base and pavement restorations. Sod shall match existing materials or as called out within the plans and specifications. All pavement, sod, grading for a final site acceptable to the City and their project representative are included in this pay item.

2.13 Rock Rip Rap Bank Protection incl. Bedding Rock & Filter Fabric **Bid Item 13**

Payment shall be made at the applicable unit price for rock rip rap installed. Payment shall be full compensation for furnishing all plant labor, materials and equipment necessary to furnish and properly install the rip rap within the limits shown on the drawings. This item includes filter fabric and bedding rock required for under rock.

PART 3 – EXECUTION (NOT USED)

END OF SECTION

Attachment: Holly Hill Lift Station 13 - Addendum 2 (2019-R-38 : Lift Station #13 Rehabilitation)

Addendum 3

Project name:	Lift Station #13 Rehabilitation	Client:	City of Holly Hill
Project location:	Holly Hill	Client representative:	Walt Smyser
Project number:	RFQ 19-WW-05	Mead & Hunt, Inc. manager:	Kevin A. Lee
Date:	May 31, 2019	Mead & Hunt Inc. phone:	(386) 761-6810

TO ALL BIDDERS: You are requested to make all changes and/or additions contained in this Addendum to the Bidding Documents. Failure to acknowledge this Addendum in Proposal shall result in rejection of bid.

I. GENERAL

1. Bid Alternate 1 added to the project scope. Relocate existing generator from Lift Station 28 (behind Mainstreet Community Bank, 1812 Ridgewood Ave. Holly Hill, FL. 32117) to Lift Station 13.
    a. Plan set revised. See attached.
    b. Specification 00 30 00 Proposal – Revised specification attached.
    c. Specification 00 31 00 Schedule of Unit Prices – Revised specification attached.
    d. Specification 01 22 00 Unit Prices – Revised specification attached.

BID DATE AND TIME SHOULD CORRESPOND TO DATE AND TIME INDICATED IN ADVERTISEMENT FOR BIDS, UNLESS DATE AND TIME HAS BEEN CHANGED IN THIS OR PREVIOUS ADDENDUMS.

QUESTIONS

1. What is the distance from the wet well to the electrical rack?

   Answer: Horizontal distance is approximately 20'-0". This measurement only serves as an estimate and in no way exempts the contractor from performing their own quantity takeoff for materials and labor.

2. Note #3 requires all fence post to be bonded. I need the amount of post? Diameter of fence post? Total length of fence? Are the fence post to be bonded with a clamp or Exothermic Weld? The note is just calling for ground rods to be welded.

   Answer: Refer to the revised drawings for fence layout and details. Clamp bond is acceptable.

Attachment: Holly Hill Lift Station 13 - Addendum 3 (2019-R-38 : Lift Station #13 Rehabilitation)

3. Note 6 is calling for seal offs to be installed 12” above grade. Note 10 ask for a Junction box 16”x16”x6” as per the drawing the box is to be mount first and then the seal off. If the box goes first and is 16” how are the seal off to be installed at 12” per note 6?

   Answer: Revise the 12” to 24” above grade. This shall be considered a minimum value and may adjust as necessary to facilitate proper installation.

4. What is the distance from the new utility pole the electrical rack?

   Answer: Horizontal distance is approximately 20’-0”. This measurement only serves as an estimate and in no way exempts the contractor from performing their own quantity takeoff for materials and labor.

5. Clarify note 9 are we to just install a new meter can on the existing wood pole Note 14 with a riser conduit and FPL will connect or do with have to go underground?

   Answer: Install new meter on existing wood pole and provide a riser on the same pole up to a weather head to connect to FPL.

6. Lift Station #13 Holly Hill Rehab existing power is 3 Phase and the new equipment is listed as 1 Phase, is this correct?

   Answer: Existing power is single phase. New installation shall be single phase.

7. It is our understanding that the once the lift station has been tested it will need to stay on bypass pumps until DEP approval has been received. Is this correct or is the station going to be allowed to be tested and put into immediate operation?

   Answer: Lift station can go into service upon successful startup for a demonstration period while permit clearance is processed.

8. The Notice to Bidders form states that the sealed qualifications are due at City Hall by the City Clerk until 10:00 a.m. on June 6. The Project Manual Invitation to Bid, Section 00 02 00 states bids are due until 2:00 p.m. on June 6. Please clarify the time the sealed bids are due.

   Answer: Bid opening is at 2:00 p.m. on June 6, 2019.

9. Per addendum #1, question #2 AND sheet C-301, note 1 indicate pumps & power are to be single phase 240v. However, note 8 under LIFT STATION WETWELL CONSTRUCTION NOTES on sheet C-051 indicates "three phase power and motors required" please clarify.

   Answer: All new equipment shall be single phase.

Attachment: Holly Hill Lift Station 13 - Addendum 3 (2019-R-38 : Lift Station #13 Rehabilitation)

10. Is 2'x2' concrete collar intended for flotation or to seal WW riser to base?

    Answer: Concrete collar to connect new precast riser section to existing wetwell. Stainless steel brackets may be used in lieu of concrete collar.

11. What are the diameters of (2) existing MH that are to be lined?

    Answer: Four-foot diameters

12. The "Acceptance of use of a general permit" from FDEP released with addendum #1 states "Constructing a Domestic Wastewater Collection/ Transmission System". Since this is federally funded will material be subject to domestic AIS requirements?

    Answer: No AIS requirements.

13. Will Fabriform be allowed in lieu of rip rap bank protection?

    Answer: Fabriform is acceptable.

14. I am attempting to locate a list of HUD Section 3 businesses in Volusia County. There are no results found on the HUD website. Is section 3 applicable to this job in this instance? If yes, where may I obtain a list of HUD Section 3 businesses. Conversely, is there a list of M/WBE businesses available?

    Answer: Contractor will be required to completed Section 3 paperwork. There is no requirement for a certain percentage of work to be performed by Section 3 or M/WBE businesses; however, Contractor shall take affirmative steps to assure that M/WBE firms are utilized when possible as suppliers and/or subcontractors.

END OF ADDENDUM

Disclaimer: This addendum was posted on Vendor Link. It is the sole responsibility of the bidder to confirm that all addenda have been received prior to submitting bid and acknowledge such in the bid documents.

CITY OF HOLLY HILL

LIFT STATION #13 REHABILITATION

BID # 19-WW05

MAY 2019

BID SET

SHEET INDEX

SHEET NUMBER	SHEET TITLE
G-001	COVER SHEET
G-021	EXISTING SITE AND BYPASS PLAN
C-051	DEMOLITION PLAN
C-201	SITE PLAN AND GENERAL NOTES
C-301	TYPICAL SECTIONS
C-501	DETAILS
C-502	DETAILS
1 C-503	DETAILS
E-001	ELECTRICAL PLAN AND DETAILS

VICINITY MAP

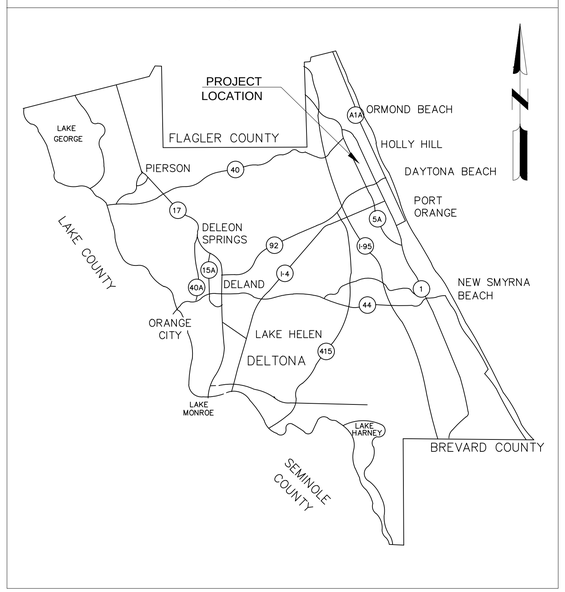

LOCATION MAP

CITY OFFICIALS

MAYOR	Chris Via
CITY MANAGER	Joseph Forte

COMMISSIONERS

DISTRICT 1	John Penny
DISTRICT 2	Penny Currie
DISTRICT 3	John C. Danio
DISTRICT 4	Roy Johnson

Know what's below. Call before you dig.

Mead & Hunt

Mead and Hunt, Inc.
4401 Eastport Parkway
Port Orange, FL 32127
phone: 386-761-6810
meadhunt.com
FL Cert. #26730

These documents shall not be used for any purpose or project for which it is not intended. Mead & Hunt shall be indemnified by the client and held harmless and defended from all claims, damages, liabilities, losses, and expenses, including attorneys' fees and costs, arising out of such misuse or reuse of the documents. In addition, unauthorized reproduction of these documents, in part or as a whole, is prohibited.

CITY OF HOLLY HILL
LIFT STATION #13 REHABILITATION

DUBS DRIVE/5TH STREET
HOLLY HILL FL

ISSUED

02/08/19	60% DESIGN
03/20/19	90% DESIGN
04/2019	REVISED
05/02/19	BID SET
1 05/31/19	BID ALT. 1

ISSUED FOR BIDDING

M&H NO.:	1000710-181066.01
DATE:	MAY 2019
DESIGNED BY:	CN
DRAWN BY:	ADC
CHECKED BY:	AMG

DO NOT SCALE DRAWINGS

SHEET CONTENTS
COVER SHEET

SHEET NO.
G-001

\\CORP.MEADHUNT.COM\SHAREDFOLDERS\ENTP\1000710\181066.01\TECH\CAD\DRAWINGS\G-001 COVER SHEET.DWG
5/31/2019 3:07:54 PM

Attachment: Holly Hill Lift Station 13 - Addendum 3 (2019-R-38 : Lift Station #13 Rehabilitation)

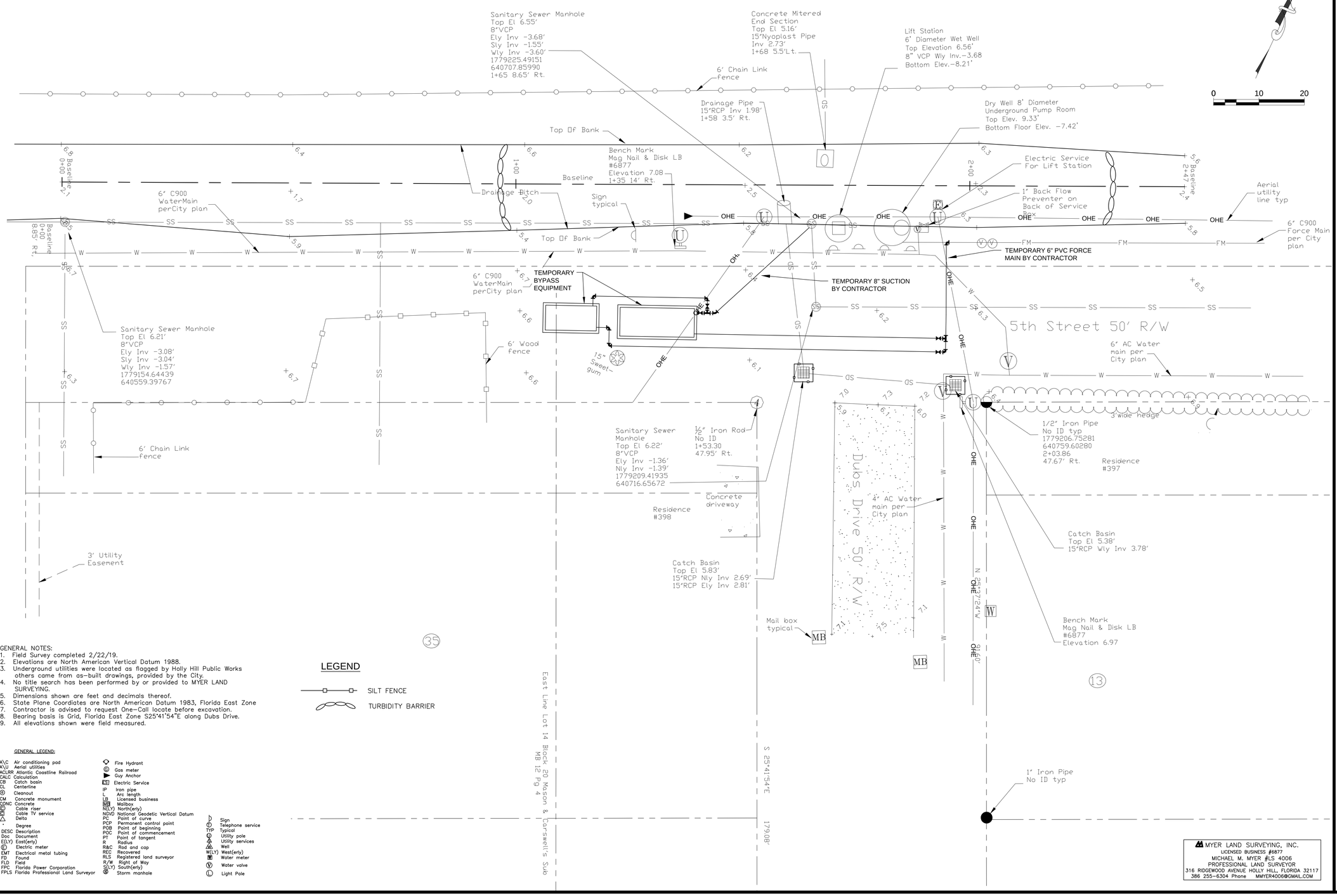

GENERAL NOTES:
1. Field Survey completed 2/22/19.
2. Elevations are North American Vertical Datum 1988.
3. Underground utilities were located as flagged by Holly Hill Public Works others came from as-built drawings, provided by the City.
4. No title search has been performed by or provided to MYER LAND SURVEYING.
5. Dimensions shown are feet and decimals thereof.
6. State Plane Coordiates are North American Datum 1983, Florida East Zone
7. Contractor is advised to request One-Call locate before excavation.
8. Bearing basis is Grid, Florida East Zone S25°41'54"E along Dubs Drive.
9. All elevations shown were field measured.

LEGEND

SILT FENCE

TURBIDITY BARRIER

GENERAL LEGEND:

A\C	Air conditioning pad		Fire Hydrant		Sign
A\U	Aerial utilities		Gas meter		Telephone service
ACLRR	Atlantic Coastline Railroad		Guy Anchor	TYP	Typical
CALC	Calculation		Electric Service		Utility pole
CB	Catch basin	IP	Iron pipe		Utility services
CL	Centerline	L	Arc length		Well
	Cleanout	LB	Licensed business	W(LY)	West(erly)
CM	Concrete monument	MB	Mailbox		Water meter
CONC	Concrete	N(LY)	North(erly)		Water valve
	Cable riser	NGVD	National Geodetic Vertical Datum		Light Pole
	Cable TV service	PC	Point of curve		
	Delta	PCP	Permanent control point		
	Degree	POB	Point of beginning		
DESC	Description	POC	Point of commencement		
Doc	Document	PT	Point of tangent		
E(LY)	East(erly)	R	Radius		
	Electric meter	R&C	Rod and cap		
EMT	Electrical metal tubing	REC	Recovered		
FD	Found	RLS	Registered land surveyor		
FLD	Field	R/W	Right of Way		
FPC	Florida Power Corporation	S(LY)	South(erly)		
FPLS	Florida Professional Land Surveyor		Storm manhole		

MYER LAND SURVEYING, INC.
LICENSED BUSINESS #6877
MICHAEL M. MYER #LS 4006
PROFESSIONAL LAND SURVEYOR
316 RIDGEWOOD AVENUE HOLLY HILL, FLORIDA 32117
386 255-6304 Phone MMYER4006@GMAIL.COM

Mead & Hunt
Mead and Hunt, Inc.
4401 Eastport Parkway
Port Orange, FL 32127
phone: 386-761-6810
meadhunt.com
FL Cert. #26730

These documents shall not be used for any purpose or project for which it is not intended. Mead & Hunt shall be indemnified by the client and held harmless and defended from all claims, damages, liabilities, losses, and expenses, including attorneys' fees and costs, arising out of such misuse or reuse of the documents. In addition, unauthorized reproduction of these documents, in part or as a whole, is prohibited.

CITY OF HOLLY HILL LIFT STATION #13 REHABILITATION

DUBS DRIVE/5TH STREET
HOLLY HILL FL

ISSUED

02/08/19	60% DESIGN
03/20/19	90% DESIGN
04/2019	REVISED
05/02/19	BID SET
1 05/31/19	BID ALT. 1

ISSUED FOR BIDDING

M&H NO.:	1000710-181066.01
DATE:	MAY 2019
DESIGNED BY:	CN
DRAWN BY:	ADC
CHECKED BY:	AMG

DO NOT SCALE DRAWINGS

SHEET CONTENTS
EXISTING SITE AND BYPASS PLAN

SHEET NO.
G-021

Attachment: Holly Hill Lift Station 13 - Addendum 3 (2019-R-38 : Lift Station #13 Rehabilitation)

LIFT STATION WETWELL CONSTRUCTION NOTES:

1. WASTEWATER FLOW SHALL BE MAINTAINED AT ALL TIMES. BYPASS PUMPING SHALL BE REQUIRED.
2. ALL PIPING AND FITTINGS IN WET WELLS TO BE ASSEMBLED USING 316 STAINLESS STEEL BOLTS AND NUTS ONLY.
3. ELECTRICAL PERMIT TO BE OBTAINED FROM CITY OF HOLLY HILL PRIOR TO BEGINNING WORK ON ANY ELECTRICAL WIRING, EQUIPMENT, ETC. ALL ELECTRICAL WIRING TO COMPLY WITH NATIONAL ELECTRICAL CODE.
4. THREE COPIES OF THE LIFT STATION OPERATING MANUAL TO BE PROVIDED TO THE PUBLIC UTILITIES DEPARTMENT PRIOR TO FINAL ACCEPTANCE OF THE LIFT STATION.
5. EMERGENCY "HIGH LEVEL" WET WELL FLASHING ALARM LIGHT AND AUDIBLE ALARM HORN REQUIRED.
6. LINKABLE FUSED ELECTRICAL DISCONNECT REQUIRED.
7. ALL PUMP STATION WIRING SHALL BE STANDARD COPPER AND CONDUIT TO HAVE APPROPRIATE SEAL-OFFS.
8. THREE PHASE POWER AND MOTORS REQUIRED.
9. 4" SCH40 PVC CONDUIT FOR FLOAT WIRES SHALL BE INSTALLED FOR ALL OFFSET LIFT STATIONS.
10. LIFT STATION START-UP INSPECTIONS SHALL BE SCHEDULED AND COORDINATED THROUGH THE CITY'S SITE INSPECTOR (48 HOURS IN ADVANCE). UPON DETERMINING THAT ALL WORK IS COMPLETE AND READY THE CITY INSPECTOR SHALL THEN NOTIFY THE CITY, CONTRACTOR, ENGINEER OF RECORD, POWER COMPANY, AND THE PUMP SUPPLIER OF THE OFFICIAL START-UP INSPECTION DATE AND TIME. UPON COMPLETION THE ENGINEER OF RECORD SHALL PROVIDE TO THE CITY A SUMMARY OF THE RESULTS OF THAT TEST AND A LIST OF ALL PUNCH LIST ITEMS OUTSTANDING
11. PUMP STATION FINAL INSPECTION AND ACCEPTANCE PROCEDURES:
    - WET WELL TO BE CLEAN AND DRY PRIOR TO ALL INSPECTIONS BY CITY PERSONNEL
    - BEFORE FINAL APPROVAL OR ACCEPTANCE OF ANY PUMP STATION BY THE CITY, THERE SHALL BE FIELD INSPECTIONS MADE BY THE CITY'S REPRESENTATIVE AND INSPECTOR. THE FIELD INSPECTIONS SHALL SHOW THAT THE PUMP STATION IS FULLY OPERATIONAL AND ALL NECESSARY APPURTENANCES HAVE BEEN INSTALLED AND CONSTRUCTED IN ACCORDANCE WITH THE PLANS AND THE STANDARD CONSTRUCTION DETAILS AS APPROVED BY THE PUBLIC UTILITIES DEPARTMENT PRIOR TO CONSTRUCTION.
    - UPON COMPLETION AND BEFORE ACCEPTANCE OF THE PUMP STATION INSTALLATION, THE CONTRACTOR SHALL TEST ALL THE PUMPING EQUIPMENT TO DEMONSTRATE SATISFACTORY PERFORMANCE. IF DEFICIENCIES OCCUR, THE CONTRACTOR SHALL CORRECT THEM ACCORDINGLY AND EQUIPMENT SHALL BE RETESTED.
    - REPRESENTATIVES FROM THE PUMPING EQUIPMENT MANUFACTURER, ENGINEER, CONTRACTOR, CITY AND THE ELECTRICAL CONTRACTOR SHALL BE PRESENT AT THE PUMP STATION START-UP TESTING AND FOR THE FINAL SITE INSPECTION.
    - ALL PUMP STATION EQUIPMENT SHALL BE TESTED AT THE START-UP. THE MANUFACTURER / CONTRACTOR SHALL PROVIDE A FORMAL TEST PROCEDURE AND FORMS FOR RECORDING DATA. THE TESTS SHALL BE PERFORMED BY THE CONTRACTOR IN THE PRESENCE OF A CITY REPRESENTATIVE AND CITY INSPECTOR. THE RECORDED FIELD DATA SHALL BE SUBMITTED TO THE PUBLIC UTILITIES DEPARTMENT ALONG WITH THE PUMP STATION ASBUILT AND PUMP STATION MAINTENANCE AND OPERATING MANUALS.
    - ALL DISTURBED AREAS SHALL BE GRADED AND SODDED. FINAL ACCEPTANCE OF THE PUMP STATION WILL NOT BE GIVEN UNTIL EFFECTIVE EROSION AND POSITIVE DRAINAGE CONTROL HAVE BEEN PROVIDED.
    - PUMP STATIONS SHALL ONLY BE CONSIDERED AS ACCEPTABLE FOR OPERATION BY THE CITY UPON WRITTEN CONFIRMATION BY THE PUBLIC UTILITIES DEPARTMENT.
    - IN THE EVENT THAT THE STATION OR ANY OF IT'S ASSOCIATED COMPONENTS ARE DETERMINED TO BE DEFICIENT AT THE START UP, THEN THE CITY RESERVES THE RIGHT TO REQUIRE A COMPLETE NEW START UP WITH ALL PARTIES PRESENT AS NOTED.

DEMOLITION NOTES:

1. REMOVE TOP SECTION OF WET WELL TO 3'-0" BELOW EXISTING GRADE OR CLOSEST PRECAST SECTION. SEE PROPOSED MECHANICAL FOR NEW WET WELL SECTION.
2. SEAL ALL WET WELL PENETRATIONS WITH NON-SHRINK H_2S RESISTANT GROUT (TYPICAL).
3. CITY SHALL HAVE OPTION TO RETAIN ANY EQUIPMENT REMOVED BY THE CONTRACTOR DURING DEMOLITION. ANY REMAINING EQUIPMENT SHALL BE THE PROPERTY OF THE CONTRACTOR AND SHALL BE REMOVED FROM THE SITE.
4. REMOVE ALL EXISTING PUMPS, PIPING, ELECTRICAL GEAR AND ALL OTHER EQUIPMENT FROM DRY PIT PUMP STATION. REMOVE TOP OF EXISTING STATION TO MIN. 5 FEET BELOW EXISTING GRADE. FILL REMAINING STATION WITH FLOWABLE FILL TO MIN. 5 FEET BELOW GRADE. FILL TO GRADE WITH CLEAN COMPACTED TOP SOIL. PROPOSED VALVE VAULT TO BE INSTALLED THIS LOCATION. SEE PROPOSED LIFT STATION SHEET 4.
5. REMOVE EXISTING GROUT FILLETS FROM WET WELL.
6. UPON COMPLETION OF PROJECT, SOD ALL DISTURBED AREAS WITH BAHIA SOD.

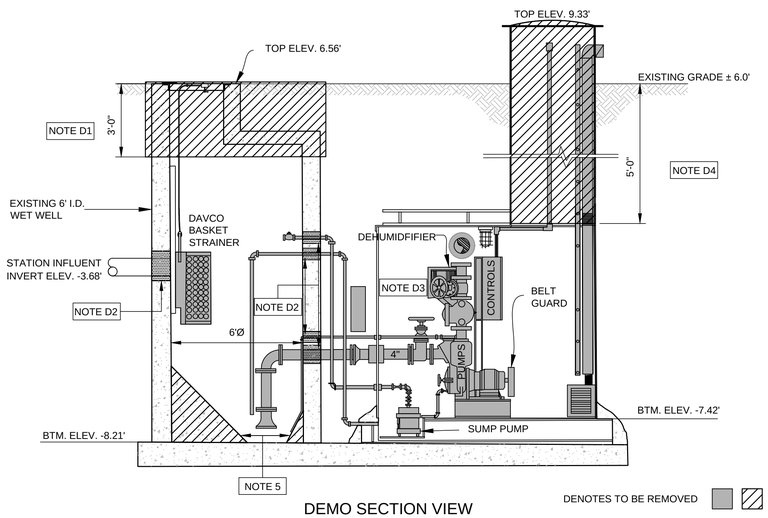

DEMO SECTION VIEW

NOT TO SCALE

DENOTES TO BE REMOVED

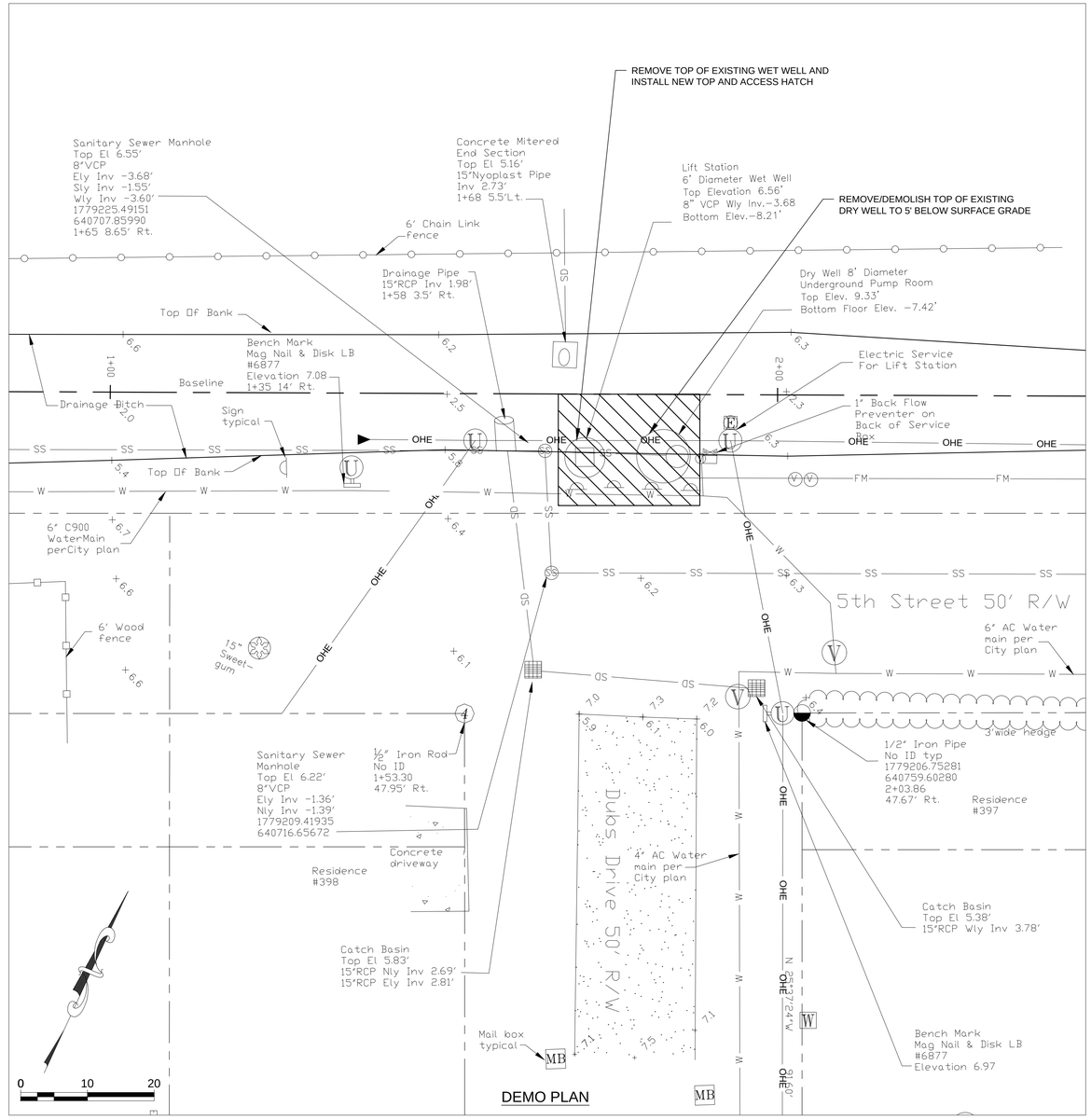

DEMO PLAN

UTILITY INFORMATION PROVIDED TO OR COLLECTED BY MEAD & HUNT DURING DESIGN										
UTILITY TYPE	UTILITY COMPANY	CONTACT	PHONE	E-MAIL	PRELIMINARY PLANS PROVIDED TO UTILITY (DATE)	INFORMATION QUALITY LEVEL AND DATE RECEIVED				FINAL PLANS PROVIDED TO UTILITY (DATE)
						LEVEL A/4	LEVEL B/3	LEVEL C/2	LEVEL D/1	
WATER	CITY OF HOLLY HILL	WALT SMYSER	(386) 248-9463	wsmyser@hollyhillfl.org	4/3/19					
WASTEWATER	CITY OF HOLLY HILL	WALT SMYSER	(386) 248-9463	wsmyser@hollyhillfl.org	4/3/19					
ELECTRIC DISTRIBUTION	FPL	SHAVONTI ARCHER	(386) 586-6432	shavonti.archer@fpl.com	4/3/19			5/1/19		
ELECTRIC TRANSMISSION	FPL	RALPH DIAZ	(561) 904-3617	ralph.diaz@fpl.com	4/3/19			4/10/19		
PHONE	AT&T FLORIDA	KIRBY SPENCER	(386) 257-7930	ks2488@att.com	4/3/19					
TV CABLE	BH NETWORKS / SPECTRUM	STACY STAFFORD	(386) 527-6836	stacy.stafford@charter.com	4/3/19					
GAS	TECO PEOPLES GAS	HEATH M MCARDLE	(904) 443-7317 (904) 545-8958	hmmcardle@tecoenergy.com	4/3/19					
SIGNALIZATION	n/a									
F.O. CABLE	CENTURY LINK / LEVEL 3	XAN MARIE RYPKEMA	(720) 888-7568	NationalRelo@centurylink.com	4/3/19					

Mead & Hunt

Mead and Hunt, Inc.
4401 Eastport Parkway
Port Orange, FL 32127
phone: 386-761-6810
meadhunt.com
FL Cert. #26730

These documents shall not be used for any purpose or project for which it is not intended. Mead & Hunt shall be indemnified by the client and held harmless and defended from all claims, damages, liabilities, losses, and expenses, including attorneys' fees and costs, arising out of such misuse or reuse of the documents. In addition, unauthorized reproduction of these documents, in part or as a whole, is prohibited.

CITY OF HOLLY HILL LIFT STATION #13 REHABILITATION

DUBS DRIVE/5TH STREET
HOLLY HILL FL

ISSUED

02/08/19	60% DESIGN
03/20/19	90% DESIGN
04/2019	REVISED
05/02/19	BID SET
1 05/31/19	BID ALT. 1

ISSUED FOR BIDDING

M&H NO.: 1000710-181066.01
DATE: MAY 2019
DESIGNED BY: CN
DRAWN BY: ADC
CHECKED BY: AMG
DO NOT SCALE DRAWINGS

SHEET CONTENTS
DEMOLITION PLAN

SHEET NO.
C-051

Attachment: Holly Hill Lift Station 13 - Addendum 3 (2019-R-38 : Lift Station #13 Rehabilitation)

SANITARY SEWER CONSTRUCTION NOTES

1. THE CITY'S PUBLIC UTILITIES DEPARTMENT (248-9463) SHALL BE GIVEN A MINIMUM OF 48 HOURS ADVANCE NOTICE (NOT INCLUDING HOLIDAYS OR WEEKENDS) PRIOR TO BEGINNING ANY SANITARY SEWER CONSTRUCTION.
2. ALL GRAVITY SANITARY SEWER MAIN LINES SHALL BE 8" DIAMETER MINIMUM. COMMERCIAL SERVICE LATERALS WITH MULTIPLE CONNECTIONS SHALL BE GREEN 6" DIAMETER OR LARGER. ALL SINGLE FAMILY RESIDENTIAL SERVICE LATERALS SHALL BE 4" SINGLE SERVICES.
3. ALL GRAVITY SANITARY SEWER LINES SHALL BE GREEN PVC SDR 26, ASTM D-3034. IN PLACES WHERE A MINIMUM COVER OF 4.0' CANNOT BE MAINTAINED, AWWA C-900 OR C-905 GREEN PVC DR-25, CLASS 100 OR CONCRETE ENCASEMENT SHALL BE USED. WATER LINES, RECLAIMED LINES, AND STORM DRAINAGE CROSSINGS SHALL ALSO FOLLOW THE CONCRETE ENCASEMENT REQUIREMENT PER THESE STANDARDS AND AS PER REGULATORY REQUIREMENTS.
4. MINIMUM GRAVITY SANITARY SEWER SLOPES ARE AS FOLLOWS:
   8" PIPE 0.40%
   10" PIPE 0.30%
   12" PIPE 0.22%
5. MAXIMUM DEPTH OF SANITARY MANHOLES SHALL BE 15.0'. MAXIMUM DEPTH OF WET WELLS SHALL BE 20.0'
6. GRAVITY SANITARY SEWER LINES SHALL BE INSTALLED WHENEVER POSSIBLE UNDER PAVED AREAS WITHIN PUBLIC RIGHTS-OF-WAY. UTILITY EASEMENTS SHALL BE PROVIDED WHENEVER PUBLICLY-OWNED SEWER LINES ARE CONSTRUCTED OUTSIDE OF A PUBLIC RIGHT-OF-WAY.
7. GRAVITY SANITARY SEWER LINE CONSTRUCTION SHALL BE ACCOMPLISHED BY THE USE OF A LASER INSTRUMENT UNLESS ANOTHER METHOD IS PREVIOUSLY APPROVED BY THE CITY.
8. THE CONTRACTOR SHALL AT ALL TIMES, DURING PIPE LAYING OPERATIONS, DEWATER THE GROUND SUFFICIENTLY TO KEEP THE GROUNDWATER ELEVATION A MINIMUM OF 6" BELOW THE PIPE BEING LAID WITHIN THE AREA OF THE TRENCH.
9. ALL PIPES SHALL BE LAID ON A FIRM FOUNDATION. SOFT OR SPONGY BEDDING FOR PIPES IS NOT ACCEPTABLE. ANY UNSUITABLE MATERIAL SHALL BE REMOVED AND REPLACED WITH A DRY, COMPACTED, GRANULAR MATERIAL SATISFACTORY TO THE CITY.
10. ON ALL EXCAVATION AND BACKFILLING THE CONTRACTOR SHALL PROVIDE ADEQUATE SHEETING AND BRACING IN ORDER TO PROVIDE FOR THE SAFETY OF WORKMEN, AS WELL AS REPRESENTATIVES OF THE CITY, THE DESIGN ENGINEER, AND THE DEVELOPER.
11. ALL TRENCHES SHALL BE BACKFILLED WITH CLEAN FILL AND COMPACTED TO THE SPECIFIED MINIMUM COMPACTION (95% IN UNPAVED AREAS AND 98% IN PAVED AREAS) OF THE OPTIMUM DENSITY OF THAT MATERIAL BASED ON THE AASHTO T-180 MODIFIED PROCTOR TEST.
12. THE CONTRACTOR SHALL EMPLOY AN INDEPENDENT TESTING LABORATORY AT HIS OWN EXPENSE TO INSURE THAT COMPACTION OF ALL FILL MATERIAL IS COMPLETED PROPERLY. TESTS SHALL BE DONE ONE FOOT ABOVE THE PIPE AND THEN AT ONE FOOT VERTICAL INTERVALS UNTIL FINAL GRADE IS REACHED. TESTING SHALL BE COMPLETED AND TEST DOCUMENTS SUBMITTED TO THE CITY AT A MINIMUM FREQUENCY OF ONE SET OF TESTS BETWEEN EACH MANHOLE AND ONE ADDITIONAL SET OF TESTS AT EVERY MANHOLE. IDENTIFICATION OF TEST LOCATIONS SHALL BE CLEARLY INDICATED ON TEST REPORTS. TEST RESULTS SHALL BE FORWARDED PROMPTLY TO THE CITY'S DESIGNATED SITE INSPECTOR.
13. THE CONTRACTOR SHALL INSTALL A METALLIZED FOIL LOCATOR TAPE, OR SIMILAR DEVICE AS MAY BE APPROVED BY THE CITY FOR THE FULL LENGTH OF ALL PVC SEWAGE FORCE MAINS. THIS PIPE LOCATOR AID SHALL BE INSTALLED BETWEEN 15" AND 24" BELOW FINISHED GRADE OR AS DIRECTED BY THE MANUFACTURER. TAPE SHALL BE COLOR CODED GREEN FOR SANITARY SEWER AND FORCE MAIN. A No. 12 WIRE SHALL BE INSTALLED WITH WIRE BROUGHT UP AT ALL VALVES.
14. ALL TESTING REQUIRED BY THE CITY SHALL BE PAID FOR BY THE CONTRACTOR/DEVELOPER.
15. ALL LOCAL COLLECTION SANITARY SEWER MANHOLES SHALL BE PRECAST WITH A MINIMUM INSIDE DIAMETER OF 4 FEET.
16. STANDARD MANHOLES SHALL BE LOCATED AT INTERVALS NOT EXCEEDING 350 FEET.
17. ALL SEWER FITTINGS TO BE "HARCO", MULTIFITTINGS, VASSALLO, PLASTIC TREADS, HEAD OR CITY APPROVED EQUAL.
18. MANHOLE RIMS SHALL MATCH FLUSH WITH THE FINISH GRADE ELEVATION IN PAVED AREAS AND A MINIMUM OF 0.2 FEET AND MAXIMUM OF 0.5 FEET ABOVE GRADE GENERALLY IN UNPAVED AREAS.
19. THE CONTRACTOR SHALL CONSTRUCT SANITARY SEWER MANHOLES IN SUCH A WAY THAT SEWER LINES DO NOT INTERSECT SEALED JOINTS BETWEEN SECTIONS OF THE MANHOLE.
20. RUBBER BOOTS AND STAINLESS STEEL BANDS SHALL BE UTILIZED IN THE CONNECTION OF THE SEWER MAIN TO THE MANHOLES (SEE STANDARD MANHOLE AND BOOT DETAIL).
21. INDIVIDUAL SANITARY SERVICE CONNECTORS ON NEW CONSTRUCTION SHALL NOT BE CONNECTED DIRECTLY INTO MANHOLES, AND MUST CONNECTED TO SEWER MAIN LINES BY USE OF WYE CONNECTIONS, UNLESS OTHERWISE BE APPROVED BY THE CITY.
22. FOR SINGLE FAMILY HOMES, SINGLE FOUR INCH SEWER SERVICES LATERALS SHALL BE CONSTRUCTED AT EACH LOT OR UNIT AND LOCATED ON THE DOWNSTREAM SIDE OF THE LOT CENTER LINE. THESE SERVICES SHALL BE EXTENDED 4 FEET ABOVE GROUND AT THE PROPERTY LINE WITH A PVC RISER AND PLUG BEING EASILY VISIBLE FROM THE ROAD. RUBBER SEAL FITTINGS SHALL BE USED ON ALL LINES. NO GLUED JOINTS ARE PERMITTED ON LATERALS.
23. FOR MULTI-FAMILY AND COMMERCIAL SITES, 6 INCH MINIMUM SEWER SERVICES AND CLEANOUTS SHALL BE PROVIDED AS APPROVED BY THE CITY.
24. SANITARY SEWER LIFT STATIONS AND FORCE MAINS, SIZE, MATERIAL, AND DESIGNS SHALL BE APPROVED BY THE CITY. LIFT STATIONS SHALL BE CONSTRUCTED WITH A MINIMUM WET WELL INTERIOR DIAMETER OF 5 FEET. FORCE MAINS SHALL BE A MINIMUM 6 INCH DIAMETER.
25. IT SHALL BE THE RESPONSIBILITY OF THE DESIGN ENGINEER TO PREPARE AND SUBMIT FLOTATION CALCULATIONS TO SIZE THE BASE OF THE WET WELL, AND ANY MANHOLES AS DEEMED NECESSARY BY THE CITY.
26. SANITARY SEWER DROP MANHOLES SHALL ONLY BE USED UNDER SPECIAL CONDITIONS AS APPROVED BY THE CITY. DROPS LESS THAN 24" SHALL NOT BE ALLOWED.
27. ALL SANITARY SEWER MANHOLE COVERS SHALL HAVE THE WORDS "HOLLY HOLLY, FLORIDA SANITARY SEWER" CAST INTO THEM.
28. ALL SANITARY SEWER FORCE MAINS, INCLUDING FITTINGS, SHALL BE PVC AWWA C-900, OR C-905 (COLOR "GREEN") (PRESSURE FITTINGS, PRESSURE CLASS 150 OR C-907) FITTINGS SHALL BE HARCO PVC GASKETED FITTINGS, MULTI-FITTINGS (OR APPROVED EQUAL.) THE FORCE MAIN MINIMUM DEPTH OF COVER SHALL BE 36".
29. ALL SANITARY SEWER FORCE MAINS SHALL USE A THRUST RESTRAINT JOINT METHOD IN COMPLIANCE WITH THE DUCTILE IRON PIPE RESEARCH ASSOCIATION GUIDELINES MODIFIED TO ACCOMMODATE PVC PIPE BY FOLLOWING THE RECOMMENDED INCREASE IN RESTRAINT LENGTH CORRESPONDING TO THE INSTALLATION OF POLYETHYLENE WRAP. IN NO INSTANCE SHALL THRUST BLOCKS BE PERMITTED.
30. SANITARY SEWER MANHOLES WHICH HAVE SEWER FORCE MAINS DISCHARGING DIRECTLY INTO THEM SHALL BE FIBERGLASS OR POLY-ETHYLENE LINED. RETRO-FITTING OF MANHOLES WITH LINERS SHALL BE REQUIRED WHEN NEW CONNECTIONS SUCH AS THIS ARE MADE. FIBERGLASS SHALL BE A MINIMUM 1/2" THICKNESS UNLESS APPROVED OTHERWISE BY THE CITY. OTHER TYPES OF LINING METHODS AND MATERIALS MAY BE CONSIDERED ON A CASE BY CASE BASIS. UNDER SPECIAL CIRCUMSTANCES WHERE HYDROGEN SULFIDE IS A MAJOR CONCERN MANHOLES UPSTREAM AND/OR DOWNSTREAM OF THE FORCE MAIN TIE-IN OR WET WELL MAY ALSO BE REQUIRED TO HAVE LININGS INSTALLED.
31. THE CITY SHALL REQUIRE ALL NEW SANITARY SEWER GRAVITY SYSTEMS TO BE SMOKE TESTED PRIOR TO FINAL ACCEPTANCE. ALL TESTING MUST BE DONE IN THE PRESENCE OF THE CITY'S DESIGNATED SITE INSPECTOR.
32. THE CITY OF HOLLY HILL RESERVES THE RIGHT TO REQUIRE THE DEVELOPER TO PERFORM VACUUM TESTING OF ALL SANITARY MANHOLES, AIR TEST SEWER MAINS, AND REQUIRES THAT ALL SANITARY SEWER MAIN LINES BE TELEVISED PRIOR TO FINAL ACCEPTANCE. LATERALS SHALL BE TELEVISED UPON DEMAND BY THE CITY PRIOR TO FINAL ACCEPTANCE WHEN IT IS SUSPECTED THAT A PROBLEM EXISTS.
33. ALL SEWER MAINS, PRIOR TO ACCEPTANCE BY THE CITY AND PRIOR TO ANY FINAL PAVING OPERATIONS, SHALL BE TELEVISED USING A "PAN AND TILT" CAMERA BY A CITY APPROVED CONTRACTOR. THE VIDEO SHALL BE NON-STOP WITH AUDIO DESCRIBING WHAT IS BEING REVIEWED. WRITTEN VIDEO LOGS DESCRIBING THE CONDITION OF THE LINES PER NASCO, PACP, AND MACP STANDARDS SHALL ACCOMPANY THE TAPE SUBMISSION TO THE CITY PRIOR TO COMMENCING ANY INSTALLATION OF ASPHALT OR CONCRETE PAVEMENT. RE-TAPING MAY BE REQUIRED BY THE CITY IF ADDITIONAL CLEARING OR CORRECTIVE ACTIONS ARE NECESSARY.
34. ALL MANHOLES CONSTRUCTED IN SIDE YARDS, BACKYARDS, AND EASEMENTS OUTSIDE OF THE RIGHT-OF-WAY SHALL BE OUTFITTED WITH FIBERGLASS LINERS IN COMPLIANCE WITH ASTM-3753 OR OTHER TYPES OF LINERS APPROVED BY THE CITY. IN ADDITION THE CITY MAY REQUIRE LINERS TO BE INSTALLED IN OTHER AREAS WHERE THE PUBLIC UTILITIES DEPARTMENT BELIEVES THE NEED IS JUSTIFIED SUCH AS IMMEDIATELY UPSTREAM OF FORCE MAINS CONNECTING TO GRAVITY MAINS.
35. ALL SEWER LINES WHICH ARE CONSTRUCTED OUTSIDE OF PUBLIC RIGHTS-OF-WAY WITHIN SIDE YARDS, BACKYARDS, AND OTHER POORLY ACCESSIBLE AREAS SHALL BE CONSTRUCTED OF C-900 PVC. ABSOLUTELY NO USE OF PLASTIC STYRENE FITTINGS SHALL BE ALLOWED.
36. SEWER LATERAL LOCATIONS SHALL BE MARKED ALONG THE OUTSIDE OF THE CURB WITH A SAW CUT "V", OR BY A METAL TAB SET INTO THE PAVEMENT.
37. CONTEC A-2000 PVC PIPE SHALL NOT BE ALLOWED FOR USE.
38. EZ-WRAP PLASTIC, AS MANUFACTURED BY PRESS SEAL GASKET CORPORATION, SHALL BE USED ON THE OUTSIDE OF ALL MANHOLE AND WETWELL JOINTS. APPLY ONE LAYER OF 9" WRAP CENTERED ON EACH JOINT. A CITY INSPECTOR SHALL PERSONALLY INSPECT ALL JOINT SEALS PRIOR TO BACKFILLING OPERATIONS.
39. ALL PROPOSED SEWER FORCE MAINS SHALL BE FLUSHED, PRESSURE TESTED AND CLEARED FOR SERVICE IN ACCORDANCE WITH THE LATEST AWWA STANDARDS AND THE FLORIDA DEPARTMENT OF ENVIRONMENTAL PROTECTION REQUIREMENTS. THE CONTRACTOR SHALL NOTIFY THE CITY'S DESIGNATED SITE INSPECTOR WHO SHALL COORDINATE WITH CITY PERSONNEL AT THE WATER OR WASTEWATER TREATMENT PLANT (AS APPROPRIATE) AT LEAST 48 HOURS PRIOR TO BEGINNING A FULL-DIAMETER FLUSH OF THE MAINS PRIOR TO THE COMMENCEMENT OF PRESSURE TESTING (SUBJECT TO AVAILABILITY).
40. THE CONTRACTOR SHALL BE REQUIRED TO PIG ALL FORCE MAINS IN EXCESS OF 6" IN DIAMETER AND PRIMARY TRANSMISSION MAINS LOCATED ON COLLECTOR AND ARTERIAL ROADWAYS. LAUNCHING AND EXTRACTION POINTS SHALL BE DETERMINED BY THE CONTRACTOR. ALL PIGGING OPERATIONS SHALL BE WITNESSED BY A HOLLY HILL REPRESENTATIVE OR CITY UTILITY INSPECTOR. (OPTIONAL AT CITY'S DESCRETION.)
41. AS A GENERAL RULE, THE NUMBER OF JOINTS SHALL BE LIMITED WHENEVER POSSIBLE. IN SPECIAL CASES WHERE A POINT REPAIR TO AN 8" TO 12" PVC SEWER MAIN IS REQUIRED, THE PROPER RIGID WRAP AROUND SLEEVE SUCH AS A JCM-210 OVERSIZED DUCTILE IRON COUPLING OR AN APPROVED EQUAL MAY BE ALLOWED BY SPECIAL APPROVAL BY THE CITY.
42. ALL IN-LINE SANITARY SEWER FORCE MAIN VALVES SHALL BE RESILIENT SEAT (AWWA C-509) VALVES FEATURING A LINED DUCTILE IRON BODY.
43. ALL TAPPING OF MAINS AND CORING OF MANHOLES SHALL BE WITNESSED BY THE CITY AND BILLED IN ACCORDANCE WITH THE ADOPTED FEE RESOLUTION. SCHEDULING OF THESE CONNECTIONS SHALL REQUIRE A MINIMUM 48 HOUR NOTIFICATION (MEASURED ON NORMAL WORK DAYS) DIRECTED TO THE CITY'S DESIGNATED SITE INSPECTOR WHO SHALL COORDINATE THE WORK DIRECTLY WITH THE PUBLIC UTILITIES DEPARTMENT. SUBSEQUENTLY, THE CONNECTION SHALL BE SCHEDULED TO COMMENCE BETWEEN 8:00 A.M. AND NOON ON THE APPROPRIATE DAY ESTABLISHED BY CITY.
44. WITH RESPECT TO TIE-IN CONNECTIONS AND CORING OPERATIONS, THE CITY RESERVES THE RIGHT TO REQUIRE CONNECTIONS TO BE PERFORMED DURING PERIODS OF LOW FLOW (MIDNIGHT TO 6:00 A.M.) IN ORDER TO MINIMIZE SERVICE DISRUPTION TO EXISTING CUSTOMERS.
45. ALL WORK PERFORMED UPON SANITARY SEWER FACILITIES OWNED OR PROPOSED TO BE OWNED BY THE CITY SHALL BE CONSTRUCTED BY AN UNDERGROUND UTILITY CONTRACTOR, OR LICENSED GENERAL CONTRACTOR, WHO IS LICENSED IN THE STATE OF FLORIDA AND REGISTERED WITH THE CITY.
46. UPON CONSTRUCTION COMPLETION AND ACCEPTANCE OF THE SYSTEM, IT SHALL BE THE DESIGN ENGINEER'S RESPONSIBILITY TO ENSURE THAT THE SYSTEM IS PROPERLY CERTIFIED AND ACCEPTED BY THE FLORIDA DEPARTMENT OF ENVIRONMENTAL PROTECTION AND AS-BUILTS ARE PROVIDED TO THE CITY PRIOR TO ANY USE OF THE SYSTEM.
47. FOR CONSTRUCTION PURPOSES, THE PLANS SHALL DIMENSION THE LOCATION, OF ALL FORCE MAINS MEASURED FROM THE BACK OF CURB (OR EDGE OF PAVEMENT, IF NO CURBING EXISTS).
48. ALL HDPE PIPE INSTALLED FOR SEWAGE FORCE MAINS SHALL BE SDR9 UNLESS SPECIFICALLY NOTED OTHERWISE. THE HDPE PIPE SHALL BE SIZED TO MATCH THE EXTERNAL DIAMETER OF THE PVC OR DIP TO WHICH IT IS ATTACHED.
49. LANDSCAPE PLANS SHALL CLEARLY DEPICT THE DESIGN LOCATION OF PLANTINGS RELATIVE TO THE LOCATION OF PUBLIC UTILITIES AND STORMWATER INFRASTRUCTURE IN ORDER TO EVALUATE POTENTIAL CONFLICTS.
50. ALL P.V.C. PIPE SHALL BE STORED IN SUCH A WAY AS TO PREVENT WARPING, DEFLECTION, OR DEFORMATION. ANY PIPE DEEMED TO BE MISSHAPED IN ANY WAY FOR ANY REASON SHALL BE REJECTED.
51. GREASE INTERCEPTORS ARE REQUIRED FOR ALL COMMERCIAL BUILDINGS HAVING KITCHEN, FOOD PREPARATION OR SERVING FACILITIES AND/OR MISCELLANEOUS USES. GREASE INTERCEPTORS CONSTRUCTED EXTERNAL TO BUILDINGS SHALL BE SIZED IN ACCORDANCE WITH FAC 64-E-6. CALCULATIONS TO DETERMINE SIZING REQUIREMENTS SHALL BE SUBMITTED AS PART OF BUILDING PERMITTING. AN INSPECTION MANHOLE MAY BE REQUIRED IMMEDIATELY DOWN STREAM OF THE GREASE INTERCEPTOR FOR INSPECTION PURPOSES, AS DEEMED APPROPRIATE BY THE CITY.
52. NO USED, RE-USED, RUSTED, SECOND HAND, OR ANY MATERIAL THAT IS NOT NEW SHALL BE USED IN ANY UTILITY IMPROVEMENT PROJECTS WITHIN THE CITY'S SERVICE AREA.
53. NEW OR RELOCATED, UNDERGROUND WATER MAINS SHALL BE LAID TO PROVIDE A HORIZONTAL DISTANCE OF AT LEAST SIX FEET, AND PREFERABLY TEN FEET, BETWEEN THE OUTSIDE OF THE WATER MAIN AND THE OUTSIDE OF ANY EXISTING OR PROPOSED GRAVITY OR PRESSURE-TYPE SANITARY SEWER, WASTEWATER FORCE MAIN, OR PIPELINE CONVEYING RECLAIMED WATER NOT REGULATED UNDER PART III OF CHAPTER 62-610, F.A.C. THE MINIMUM HORIZONTAL SEPARATION DISTANCE BETWEEN WATER MAINS AND GRAVITY-TYPE SANITARY SEWERS SHALL BE REDUCED TO THREE FEET WHERE THE BOTTOM OF THE WATER MAIN IS LAID AT LEAST SIX INCHES ABOVE THE TOP OF THE SEWER. NEW OR RELOCATED, UNDERGROUND WATER MAINS CROSSING ANY EXISTING OR PROPOSED GRAVITY OR VACUUM-TYPE SANITARY SEWER SHALL BE LAID SO THE OUTSIDE OF THE WATER MAIN IS AT LEAST SIX INCHES, AND PREFERABLY 12 INCHES, ABOVE OR AT LEAST 12 INCHES BELOW THE OUTSIDE OF THE OTHER PIPELINE. HOWEVER, IT IS PREFERABLE TO LAY THE WATER MAIN ABOVE THE OTHER PIPELINE. AT THE UTILITY CROSSINGS DESCRIBED ABOVE, ONE FULL LENGTH OF WATER MAIN PIPE SHALL BE CENTERED ABOVE OR BELOW THE OTHER PIPELINE SO THE WATER MAIN JOINTS WILL BE AS FAR AS POSSIBLE FROM THE OTHER PIPELINE. ALTERNATIVELY, AT SUCH CROSSINGS, THE PIPES SHALL BE ARRANGED SO THAT ALL WATER MAIN JOINTS ARE AT LEAST THREE FEET FROM ALL JOINTS IN VACUUM-TYPE SANITARY SEWERS, OR PIPELINES CONVEYING RECLAIMED WATER REGULATED UNDER PART III OF CHAPTER 62-610, F.A.C., AND AT LEAST SIX FEET FROM ALL JOINTS IN GRAVITY OR PRESSURE-TYPE SANITARY SEWERS, WASTEWATER FORCE MAINS, OR PIPELINES CONVEYING RECLAIMED WATER NOT REGULATED UNDER PART III OF CHAPTER 62-610, F.A.C

SITE PLAN NOTES:

1. REGRADE AND SOD ALL DISTURBED AREAS WITH TO MATCH EXISTING.
2. OTHER UNDERGROUND UTILITIES MAY EXIST. CONTRACTOR TO ADJUST WORK ACCORDINGLY.
3. FORCEMAIN VALVE REPLACEMENT WILL REQUIRE CITY WIDE SHUTDOWN. TIE-IN TO BE PERFORMED DURING LOW FLOW PERIOD (NIGHT) AND SCHEDULED WITH CITY 72 HRS IN ADVANCE.

RESTORATION NOTES

1. THE CONTRACTOR SHALL BE RESPONSIBLE FOR ALL DAMAGE TO AND REPLACEMENT OF EXISTING UTILITIES. REPLACEMENT SHALL BE TO THE COMPLETE SATISFACTION OF THE ENGINEER.
2. THE CONTRACTOR SHALL PRESERVE FROM DAMAGE ALL PROPERTY ALONG THE LINE OF WORK, OR IN THE VICINITY THEREOF, OR IS IN ANY WAY AFFECTED BY THE WORK THE REMOVAL OF OR DESTRUCTION OF, WHICH IS NOT CALLED FOR BY THE PLANS. WHEREVER SUCH PROPERTY IS DAMAGED DUE TO CONSTRUCTION ACTIVITIES OF THE CONTRACTOR, IT SHALL BE IMMEDIATELY RESTORED TO ITS ORIGINAL CONDITION BY THE CONTRACTOR.
3. ALL RESTORATION SHALL CONFORM TO THE CITY OF HOLLY HILL REQUIREMENTS AT NO COST TO THE OWNER.
4. ALL DISTURBED AREAS WITHIN COUNTY RIGHT-OF-WAY SHALL BE SODDED.

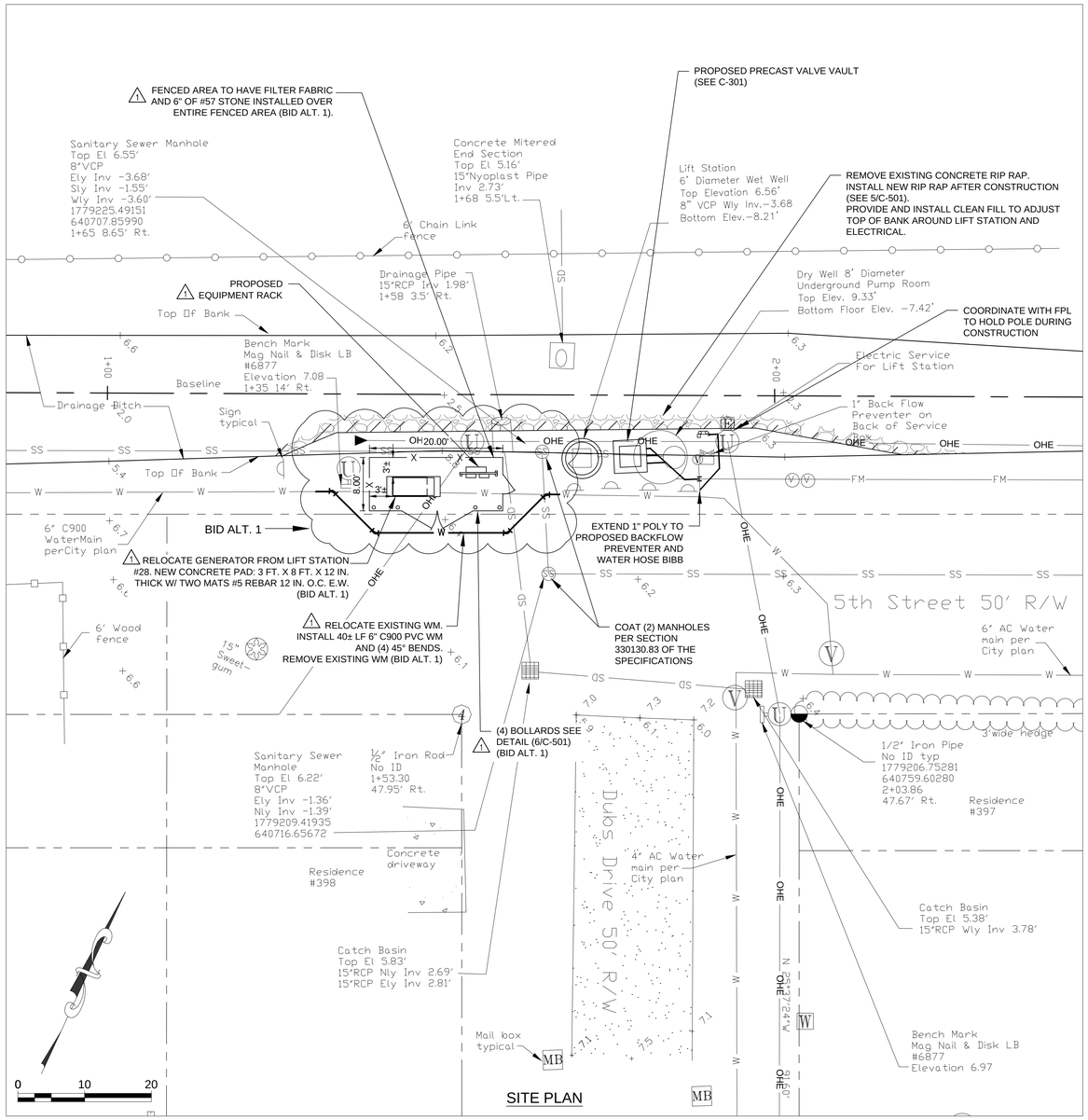

GENERAL CONSTRUCTION NOTES

1. ALL CONSTRUCTION SHALL BE DONE IN ACCORDANCE WITH ALL GOVERNING STANDARDS, SPECIFICATIONS, REGULATIONS AND PERTINENT DOCUMENTS.
2. UTILITIES & STRUCTURES AS SHOWN ON PLANS HAVE BEEN LOCATED FROM AVAILABLE RECORDS, BUT IT SHALL BE THE CONTRACTOR'S RESPONSIBILITY TO ASCERTAIN THE LOCATION OF ALL UTILITIES AND STRUCTURES TO BE ENCOUNTERED IN THE WORK AND TO AVOID CONFLICT WITH EXISTING FACILITIES.
3. THE OWNER SHALL NOT BE HELD RESPONSIBLE FOR INACCURACIES OR OMISSIONS IN THE LOCATION, ELEVATION AND DIMENSIONS OF EXISTING UTILITIES, STRUCTURES AND OTHER EXISTING FEATURES.
4. THE CONTRACTOR SHALL CONTACT THE ENGINEER'S OFFICE IMMEDIATELY ON ANY CONFLICTS ARISING DURING CONSTRUCTION OF ANY IMPROVEMENTS SHOWN ON THESE DRAWINGS.
5. THE CONTRACTOR SHALL PROVIDE FORTY-EIGHT (48) HOURS NOTICE TO THE VARIOUS UTILITY OWNERS PRIOR TO CONSTRUCTION.
6. THE CONTRACTOR SHALL CONDUCT HIS WORK AS TO INSURE LEAST POSSIBLE OBSTRUCTION TO TRAFFIC AND INCONVENIENCE TO THE GENERAL PUBLIC AND THE RESIDENTS IN THE VICINITY OF THE WORK AND TO INSURE THE PROTECTION OF PERSONS AND PROPERTY. NO ROAD TO BE CLOSED TO THE PUBLIC EXCEPT WITH THE APPROVAL OF THE ENGINEER AND THE PROPER GOVERNMENTAL AUTHORITY.
7. THE CONTRACTOR SHALL EMPLOY A LAND SURVEYOR, REGISTERED IN THE STATE OF FLORIDA, TO REFERENCE AND RESTORE PROPERTY CORNERS AND LAND MARKERS WHICH MAY BE DISTURBED BY CONSTRUCTION AND TO ASSURE ACCURATE HORIZONTAL AND VERTICAL CONTROLS DURING CONSTRUCTION.
8. IT SHALL BE THE CONTRACTOR'S RESPONSIBILITY AND THE CONTRACTOR'S EXPENSE TO PROVIDE THE CONSULTING ENGINEER WITH "AS-BUILT" DRAWINGS OF CONSTRUCTION. DRAWINGS SHALL CONTAIN SPECIFIC LOCATION OF ALL WATER MAINS, FORCE MAINS AND RECLAIMED WATER MAINS, VALVES AND SERVICE.
9. ADEQUATE EXCAVATION, SHEATING, SHORING AND BRACING SHALL BE PROVIDED AND SHALL CONFORM TO CONSTRUCTION REQUIREMENTS AS SET FORTH BY THE FEDERAL DEPARTMENT OF LABOR, OCCUPATIONAL SAFETY AND HEALTH ADMINISTRATION.
10. THE CONTRACTOR SHALL BE RESPONSIBLE TO MAKE A REVIEW OF THE SITE TO DETERMINE EXISTING CONDITIONS AND ANYTHING NOT SHOWN ON THESE DRAWINGS SHOULD BE BROUGHT TO THE ATTENTION OF THE ENGINEER AND SHALL NOT CONSTITUTE AN EXTRA UNLESS APPROVED BY THE ENGINEER. THE CONTRACTOR SHALL VERIFY THE LOCATIONS, ELEVATIONS AND OTHER FEATURES AFFECTING HIS WORK PRIOR TO CONSTRUCTION.

UTILITY OWNERS:

HOLLY HILL PUBLIC WORKS	386.248.9463
CITY OF HOLLY HILL	386.248.2428
BELLSOUTH	386.295.3080
SPECTRUM	386.760.9941
FPL	386.254.1541
PEOPLES GAS	386.253.5335
VOLUSIA COUNTY	386.257.6000
D.O.T.	386.736.5010
SUNSHINE LOCATES 811 or	800.432.4770

Mead & Hunt
Mead and Hunt, Inc.
4401 Eastport Parkway
Port Orange, FL 32127
phone: 386-761-6810
meadhunt.com
FL Cert. #26730

These documents shall not be used for any purpose or project for which it is not intended. Mead & Hunt shall be indemnified by the client and held harmless and defended from all claims, damages, liabilities, losses, and expenses, including attorneys' fees and costs, arising out of such misuse or reuse of the documents. In addition, unauthorized reproduction of these documents, in part or as a whole, is prohibited.

CITY OF HOLLY HILL LIFT STATION #13 REHABILITATION

DUBS DRIVE/5TH STREET
HOLLY HILL FL

ISSUED

02/08/19	60% DESIGN
03/20/19	90% DESIGN
04/2019	REVISED
05/02/19	BID SET
1 05/31/19	BID ALT. 1

ISSUED FOR BIDDING

M&H NO.: 1000710-181066.01
DATE: MAY 2019
DESIGNED BY: CN
DRAWN BY: ADC
CHECKED BY: AMG
DO NOT SCALE DRAWINGS

SHEET CONTENTS
SITE PLAN AND GENERAL NOTES

SHEET NO.
C-201

Attachment: Holly Hill Lift Station 13 - Addendum 3 (2019-R:38 : Lift Station #13 Rehabilitation)

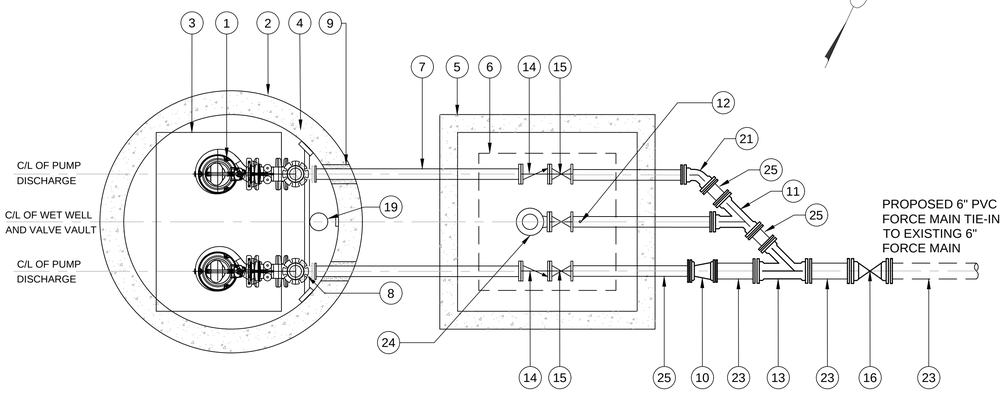

PLAN VIEW
SCALE: 1/2" = 1'-0"

NOTE: USE MEGA-LUG TYPE RESTRAINT AT ALL M.J. FITTINGS

BACKUP FLOAT SETTINGS			
FLOAT	ELEV.	ACTION	NOTES
1	-7.0	ALL PUMPS OFF	ADJUST PER OWNER / MANUFACTURER
2	-5.0	PUMP #1 ON	ADJUST PER OWNER / MANUFACTURER
3	-4.0	PUMP #2 ON	ADJUST PER OWNER / MANUFACTURER
4	-3.5	HIGH LEVEL	ADJUST PER OWNER

LIFT STATION NOTES:

1. VALVE VAULT TO HAVE (2) COATS - 15 MILS TOTAL OF COAL TAR EPOXY INTERIOR COATING. INSTALL 2" SCH80 PVC VAULT DRAIN AS SHOWN. INSTALL 2" DRAIN TRAP INSIDE WETWELL.
2. PROVIDE HASP TYPE LOCKING MECHANISM ON ALL ACCESS HATCHES.
3. PUMPS TO BE FURNISHED WITH HIGH PRESSURE DISCHARGE COUPLING, STAINLESS STEEL SLIDERAIL SYSTEM, SEAL FAILURE, THERMAL OVERLOAD INDICATORS, AND LIFTING CHAIN.
4. ALL DISTURBED AREAS TO BE REGRADED AND SODDED TO MATCH EXISTING.
5. ALL HARDWARE INSIDE WETWELL TO BE 316 STAINLESS STEEL.
6. COAT ALL DIP PIPING, VALVES, FITTINGS IN WET WELL AND VALVE VAULT WITH 15 MILS OF COAL TAR EPOXY.

EQUIPMENT KEY LIST

1. PROPOSED SUBMERSIBLE PUMPS (2) XFP 100C CBI 180GPM @ 17 FT TDH 2.68 HP, 1163 RPM, 1Ø, 60Hz, 230V. PUMP ASSEMBLIES TO INCLUDE (2) 2" 316 S.S. GUIDE BARS, FLOAT HANGERS, AND LIFTING CHAIN. ALL ATTACHMENT HARDWARE TO BE 316 S.S.
2. EXISTING 6.0 FT. I.D. CONCRETE WET WELL. FURNISH AND INSTALL NEW 6.0' DIA. TOP. FURNISH AND INSTALL NEW PRECAST CONCRETE WET WELL TOP WITH ALUMINUM ACCESS HATCHES (SEE ③ BELOW). KEY TOP SLAB TO NEW WET WELL SECTION. CONTRACTOR TO VERIFY DIAMETER BEFORE ORDERING TOP.
3. WET WELL SPRING ASSISTED ACCESS HATCH BILCO OR HALLIDAY PRODUCTS H-20 LOADING. COORDINATE ACCESS HATCH LOCATION WITH PUMP MOUNTING LOCATIONS. MINIMUM CLEAR OPENING 42"x60" TO PROVIDE CLEARANCE ON ALL SIDES OF PUMP FOR REMOVAL. ALL HARDWARE TO BE 316 S.S.
4. FURNISH AND INSTALL "RAVEN" OR "SPECTRASHIELD" EPOXY INTERIOR LINER IN NEW WET WELL. TO BE INSTALLED AFTER ALL PIPE AND HARDWARE AND PRIOR TO BASEPLATE INSTALLATION. (SEE PROJECT SPECIFICATIONS)
5. PRECAST VALVE VAULT. 5'x5' MINIMUM INTERIOR DIMENSION. FIELD INSTALL CONCRETE PIPE SUPPORTS.
6. VALVE VAULT SPRING ASSISTED ACCESS HATCH BILCO OR HALLIDAY PROD. H-20 LOADING 42"x42" MIN. CONTRACTOR TO VERIFY HATCH SIZE IS ADEQUATE. TO PROVIDE UNOBSTRUCTED ACCESS TO ALL VALVES. (SEE NOTE 2)
7. DISCHARGE RISER 4" HDPE DR9 PIPE WITH WELDED FLANGES AND 316 S.S. HARDWARE. (TYP. OF 2)
8. 4" FL HDPE 90° BEND (TYP. OF 2)
9. GROUT SEAL AROUND DISCHARGE LINES WITH H_2S RESISTANT NON-SHRINK GROUT PRIOR TO LINER INSTALLATION (TYP.)
10. 6"X4" M.J. REDUCER, DIP EPOXY LINED
11. 4"X4" MJ WYE, DIP EPOXY LINED (TYP. OF 1)
12. 0-40 PSI GLYCERIN FILLED PRESSURE GAUGE IN DIP PIPE WITH S.S. BALL VALVE
13. 6"X4" M.J. WYE, DIP EPOXY LINED
14. 4" FL. CUSHIONED CHECK VALVE W/ SWING ARM. (TYP. OF 2)
15. 4" AMERICAN BALL VALVE (TYP. OF 3)
16. 6" GATE VALVE, EPOXY LINED WITH VALVE BOX. CONCRETE PAD AROUND VALVE BOX SHALL BE 12"x12"x6". (TYP. OF 1)
17. 4 FLOATS FOR PUMP CONTROL. SEE FLOAT SETTINGS CHART THIS SHEET
18. ANCHOR BASE ELBOW TO WET WELL FLOOR. INSTALL 1/2" 316 STAINLESS STEEL PLATE WITH 3/4" STAINLESS STEEL ALL THREAD TO ANCHOR BASE ELBOWS TO ONE (1) BASE PLATE. BASE PLATE TO BE ANCHORED TO WETWELL WITH MIN. FOUR (4) 3/4" ALL THREAD WITH EPOXY ANCHORS (MIN. 4" EMBEDDED) IN CONCRETE FLOOR.
19. LEVEL TRANSDUCER STILLING WELL 6" PVC WITH 1/2" HOLES AS SHOWN. SUPPORT BRACKETS 316 S.S.
20. 2" SCH80 PVC VALVE VAULT DRAIN WITH TRAP
21. 4" MJ 45° BEND, DIP EPOXY LINED (TYP. OF 1)
22. 6" SCH80 PVC WET WELL VENT WITH 316 S.S. INSECT SCREEN. 6" PIPE SLEEVE TO BE CAST INTO WETWELL TOP. PIPE AND FITTINGS DRY-FIT, NOT GLUED
23. 6" C900 PVC FM
24. 4" CAMLOCK EMERGENCY PUMP CONNECTION WITH DUST CAP PER CITY STANDARDS
25. 4" DIP EPOXY LINED
26. 4" FL DIP 90° BEND EPOXY LINED
27. 316 S.S. LIFTING CHAIN

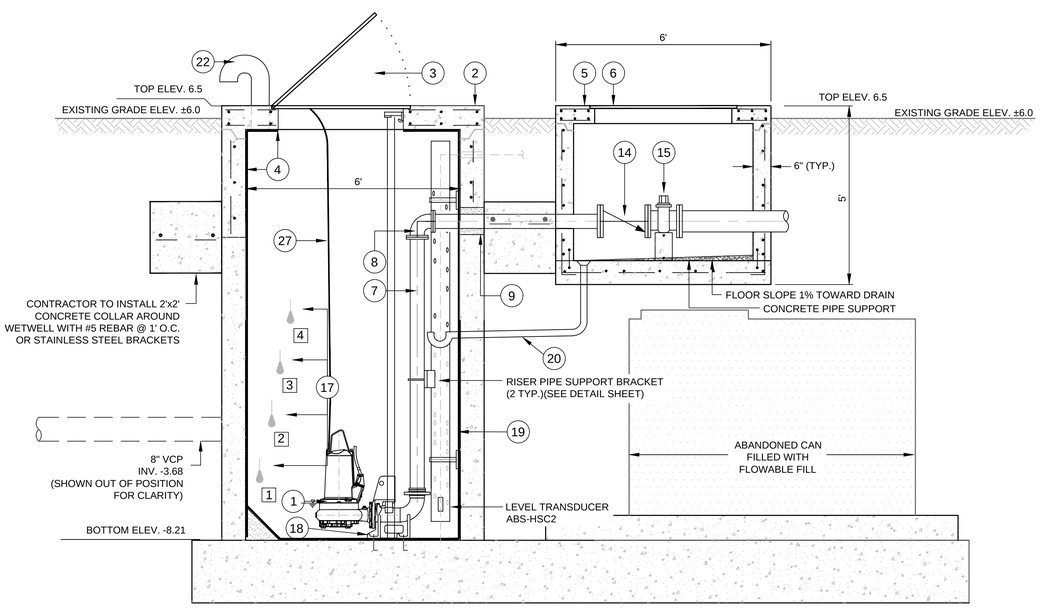

SECTION VIEW
SCALE: 1/2" = 1'-0"

PROPOSED LIFT STATION OPERATION DATA

EST. DAILY FLOW = 60,000-100,000 GPD (EXISTING)
NO NEW FLOWS ARE PROPOSED
EST. AVG. RUN TIME = 4-6 HOURS PER DAY

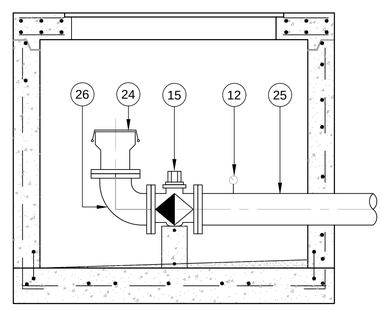

EMERGENCY PUMP CONNECTION DETAIL
NTS

Mead & Hunt
Mead and Hunt, Inc.
4401 Eastport Parkway
Port Orange, FL 32127
phone: 386-761-6810
meadhunt.com
FL Cert. #26730

These documents shall not be used for any purpose or project for which it is not intended. Mead & Hunt shall be indemnified by the client and held harmless and defended from all claims, damages, liabilities, losses, and expenses, including attorneys' fees and costs, arising out of such misuse or reuse of the documents. In addition, unauthorized reproduction of these documents, in part or as a whole, is prohibited.

CITY OF HOLLY HILL
LIFT STATION #13 REHABILITATION

DUBS DRIVE/5TH STREET
HOLLY HILL FL

ISSUED

02/08/19	60% DESIGN
03/20/19	90% DESIGN
04/2019	REVISED
05/02/19	BID SET
1 05/31/19	BID ALT. 1

ISSUED FOR BIDDING

M&H NO.: 1000710-181066.01
DATE: MAY 2019
DESIGNED BY: CN
DRAWN BY: ADC
CHECKED BY: AMG
DO NOT SCALE DRAWINGS

SHEET CONTENTS
TYPICAL SECTIONS

SHEET NO.
C-301

Attachment: Holly Hill Lift Station 13 - Addendum 3 (2019-R-38 : Lift Station #13 Rehabilitation)

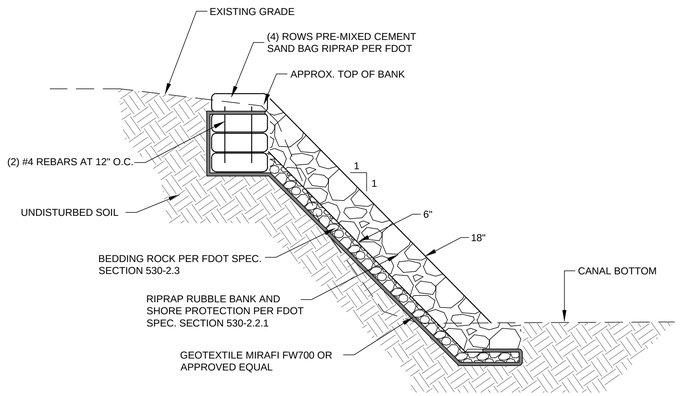

5 RIP RAP BANK PROTECTION
NTS

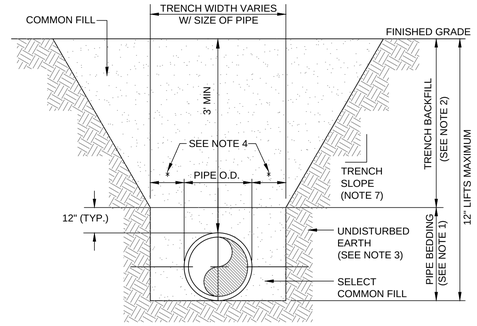

NOTES:

1. PIPE BEDDING: SELECT COMMON FILL COMPACTED TO 95% OF THE MAXIMUM DENSITY AS PER AASHTO T-180.
2. TRENCH BACKFILL: COMMON FILL COMPACTED TO 95% OF THE MAXIMUM DENSITY AS PER AASHTO T-180, (98% DENSITY REQUIRED UNDER DRIVEWAYS, PAVEMENT AND STRUCTURES).
3. PIPE BEDDING UTILIZING SELECT COMMON FILL OR BEDDING ROCK IN ACCORDANCE WITH TYPE "A" BEDDING AND TRENCHING DETAIL MAY BE REQUIRED AS DIRECTED BY THE CITY.
4. (*): 15" MAX. FOR PIPE DIAMETER LESS THAN 24", AND 24" MAX. FOR PIPE DIAMETER 24" AND LARGER.
5. WATER SHALL NOT BE PERMITTED IN THE TRENCH DURING CONSTRUCTION.
6. ALL PIPE TO BE INSTALLED WITH BELL FACING UPSTREAM TO THE DIRECTION OF FLOW.
7. REFER TO OSHA REQUIREMENTS FOR SLOPING, SHEETING AND BRACING IN EXCAVATIONS.
8. FINAL RESTORATION IN IMPROVED AREAS SHALL BE IN COMPLIANCE WITH ALL APPLICABLE REGULATIONS OF GOVERNING AGENCIES. SURFACE RESTORATION WITHIN RIGHT-OF-WAY SHALL COMPLY WITH REQUIREMENTS OF RIGHT-OF-WAY UTILIZATION REGULATIONS AND ROAD CONSTRUCTION SPECIFICATIONS.

3 TYPE "B" BEDDING AND TRENCHING
NTS

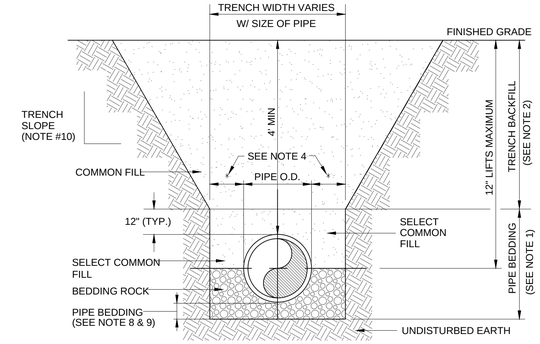

NOTES:

1. PIPE BEDDING: #57 STONE OR BEDDING ROCK COMPACTED TO 95% OF THE MAXIMUM DENSITY AS PER AASHTO T-180.
2. TRENCH BACKFILL: COMMON FILL COMPACTED TO 95 % OF THE MAXIMUM DENSITY AS PER AASHTO T-180. (98% DENSITY REQUIRED UNDER PAVEMENT, DRIVEWAYS AND STRUCTURES.)
3. USE TYPE "A" BEDDING TO BE DETERMINED IN THE FIELD AS DIRECTED BY THE CITY.
4. (*): 15" MAX. FOR PIPE DIAMETER LESS THAN 24", AND 24" MAX. FOR PIPE DIAMETER 24" AND LARGER.
5. WATER SHALL NOT BE PERMITTED IN THE TRENCH DURING CONSTRUCTION.
6. ALL PIPE TO BE INSTALLED WITH BELL FACING UPSTREAM TO THE DIRECTION OF FLOW.
7. REFER TO SECTION 32.5 OF THE MANUAL FOR SHEETING AND BRACING IN EXCAVATIONS.
8. GRAVITY SEWERS SHALL UTILIZE TYPE "A" BEDDING, WHERE UNSUITABLE MATERIAL EXISTS. BEDDING DEPTH SHALL BE 4" MINIMUM FOR PIPE DIAMETER LESS THAN 15", AND 6" MINIMUM FOR PIPE DIAMETER 16" AND LARGER.
9. DEPTH FOR REMOVAL OF UNSUITABLE MATERIAL SHALL GOVERN DEPTH OF BEDDING ROCK BELOW THE PIPE. CITY SHALL DETERMINE IN THE FIELD REQUIRED REMOVAL OF UNSUITABLE MATERIAL TO REACH SUITABLE FOUNDATION.
10. REFER TO OSHA REQMTS. FOR SLOPING, SHEETING AND BRACING IN EXCAVATIONS.

1 TYPE "A" BEDDING AND TRENCHING
NTS

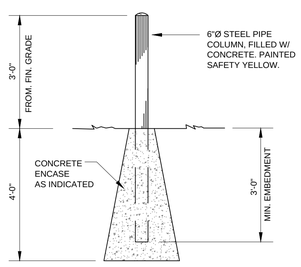

6 BOLLARD
NTS

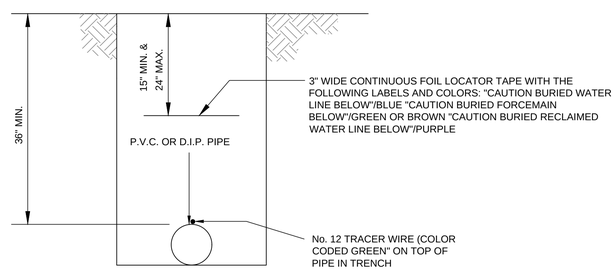

"TERRA TAPE D" or SIMILAR

NOTE:

No. 12 TRACER WIRE TO BE INSTALLED WITH ALL NON-METALLIC PIPE. WIRE SHALL BE BROUGHT UP TO GRADE AT ALL VALVES INSIDE P.V.C. SLEEVE.

4 LOCATOR TAPE / TRACERWIRE INSTALLATION FOR SEWER, WATER AND RECLAIMED WATER PIPELINES
NTS

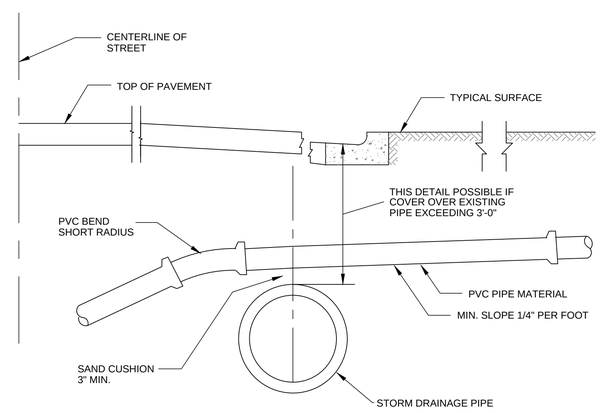

ALTERNATE GRADIENT FOR HOUSE SERVICE SEWERS AT CONFLICTS WITH EXISTING STORM SEWERS & OTHER EXISTING CONDUITS

2 STORM DRAINAGE CROSSING / SANITARY LATER PIPE CROSSING
NTS

Mead & Hunt
Mead and Hunt, Inc.
4401 Eastport Parkway
Port Orange, FL 32127
phone: 386-761-6810
meadhunt.com
FL Cert. #26730

These documents shall not be used for any purpose or project for which it is not intended. Mead & Hunt shall be indemnified by the client and held harmless and defended from all claims, damages, liabilities, losses, and expenses, including attorneys' fees and costs, arising out of such misuse or reuse of the documents. In addition, unauthorized reproduction of these documents, in part or as a whole, is prohibited.

CITY OF HOLLY HILL LIFT STATION #13 REHABILITATION

DUBS DRIVE/5TH STREET
HOLLY HILL FL

ISSUED

02/08/19	60% DESIGN
03/20/19	90% DESIGN
04/2019	REVISED
05/02/19	BID SET
1 05/31/19	BID ALT. 1

ISSUED FOR BIDDING

M&H NO.: 1000710-181066.01
DATE: MAY 2019
DESIGNED BY: CN
DRAWN BY: ADC
CHECKED BY: AMG
DO NOT SCALE DRAWINGS

SHEET CONTENTS
DETAILS

SHEET NO.
C-501

Attachment: Holly Hill Lift Station 13 - Addendum 3 (2019-R-38 : Lift Station #13 Rehabilitation)

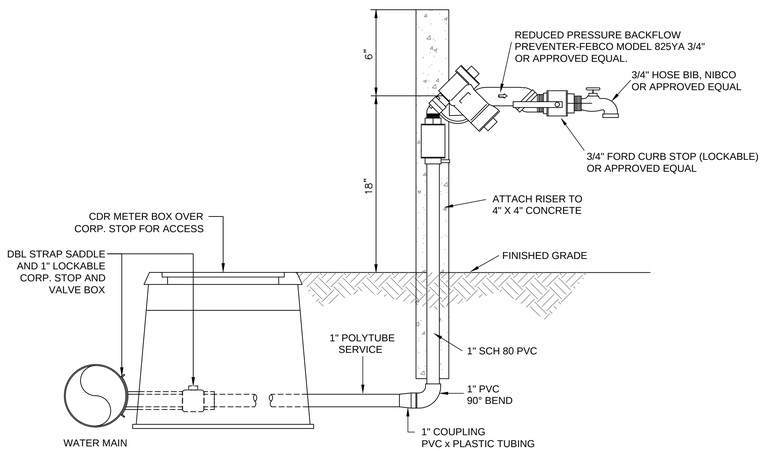

1. ALL BRASS FITTINGS TO BE LEAD FREE NSF 372

11 LIFT STATION WATER SERVICE
NTS

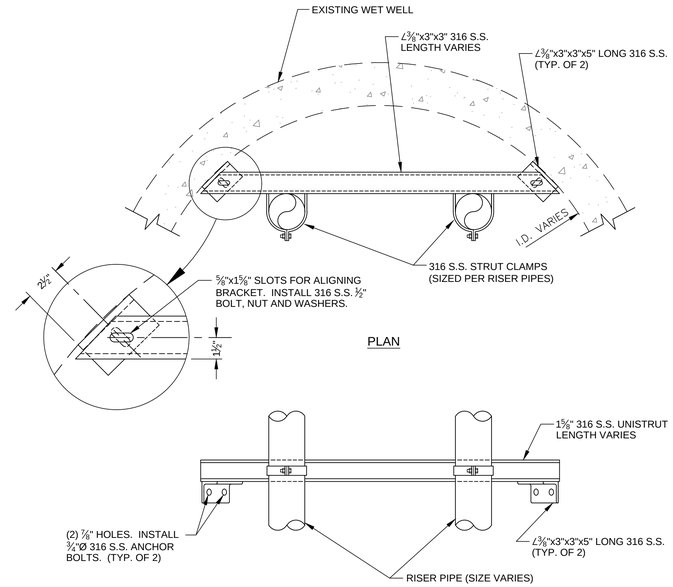

ELEVATION

9 RISER PIPE SUPPORT BRACKET
NTS

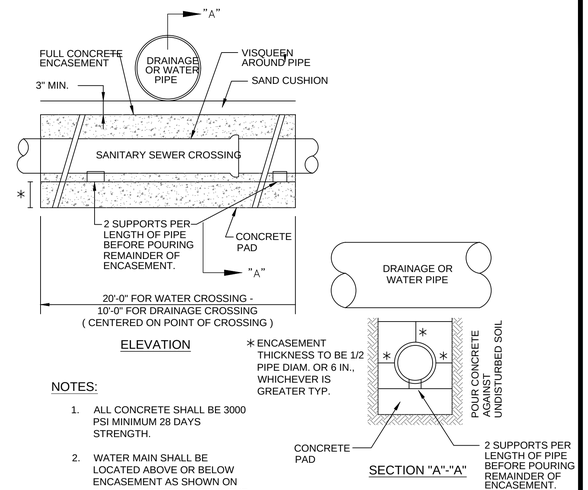

ELEVATION

SECTION "A"-"A"

NOTES:

1. ALL CONCRETE SHALL BE 3000 PSI MINIMUM 28 DAYS STRENGTH.
2. WATER MAIN SHALL BE LOCATED ABOVE OR BELOW ENCASEMENT AS SHOWN ON PLANS OR DETERMINED IN THE FIELD. USE ENCASEMENT WHERE VERTICAL CLEARANCE WATER MAIN AND SEWER MAIN IS LESS THAN 18 INCHES.
3. NO DUCTILE IRON SEWER PIPE IS PERMITTED.

7 SEWER / WATER / DRAINAGE CROSSING
NTS

LOCATION OF PUBLIC WATER SYSTEM MAINS IN ACCORDANCE WITH F.A.C. RULE 62-555.314

Other Pipe	Horizontal Separation	Crossings (1)	Joint Spacing @ Crossings (Full Joint Centered)
Storm Sewer, Stormwater Force Main, Reclaimed Water (2)	Water Main; 3 ft. minimum	Water Main; 12 inches is the minimum, except for storm sewer, then 6 inches is the minimum and 12 inches is preferred	Alternate 3 ft. minimum; Water Main
Vacuum Sanitary Sewer	Water Main; 10 ft. preferred; 3 ft. minimum	Water Main; 12 inches preferred; 6 inches minimum	Alternate 3 ft. minimum; Water Main
Gravity or Pressure Sanitary Sewer, Sanitary Sewer Force Main, Reclaimed Water (4)	Water Main; 10 ft. preferred; 6 ft. minimum (3)	Water Main; 12 inches is the minimum, except for gravity sewer, then 6 inches is the minimum and 12 inches is preferred	Alternate 6 ft. minimum; Water Main
On-Site Sewage Treatment & Disposal System	10 ft. minimum	---	---

(1) Water main should cross above other pipe. When water main must be below other pipe, the minimum separation is 12 inches.
(2) Reclaimed water regulated under Part III of Chapter 62-610, F.A.C.
(3) 3 ft. for gravity sanitary sewer where the bottom of the water main is laid at least 6 inches above the top of the gravity sanitary sewer.
(4) Reclaimed water not regulated under Part III of Chapter 62-610, F.A.C.

Disclaimer – This document is provided for your convenience only. Please refer to F.A.C. Rule 62-555.314 for additional construction requirements.

12 PIPE SEPARATION DIAGRAM
NTS

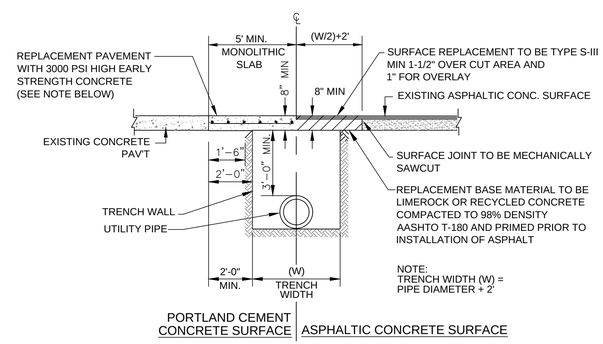

NOTES:

1. PAVING REPLACEMENT SHALL INCLUDE RAISING ALL MANHOLE FRAMES AND LIDS AND VALVE BOXES AND LIDS (AND SIMILAR APPURTENANCES) TO FINAL ELEVATION PRIOR TO RESURFACING.
2. SUBBASE TO BE COMPACTED TO 98% MAXIMUM DENSITY AASHTO T-180.
3. IN AREAS WHERE CONCRETE PAVEMENT IS TO BE UTILIZED, 3000 PSI - 28 DAY STRENGTH CONCRETE PAVEMENT MAY BE PERMITTED PROVIDED THAT THE SUBJECT AREA WILL REMAIN FREE OF VEHICULAR TRAFFIC FOR A MINIMUM OF 3 DAYS.

10 PAVEMENT TRENCH RESTORATION
NTS

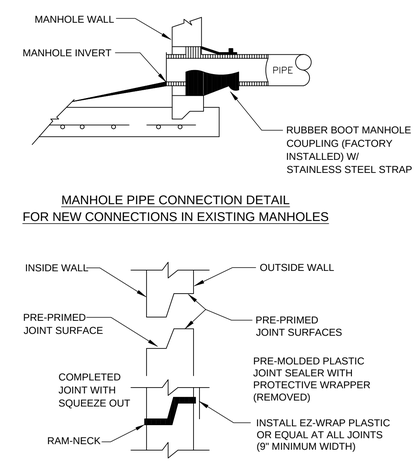

NOTES:

1. ALL NEW CONNECTIONS TO EXISTING SANITARY SEWER MANHOLES SHALL UTILIZE A CORING METHOD AND THE IN-FIELD INSTALLATION OF A RUBBER BOOT INTO THE MANHOLE.

8 RUBBER BOOT AND PRECAST JOINT CONNECTION
NTS

Mead & Hunt
Mead and Hunt, Inc.
4401 Eastport Parkway
Port Orange, FL 32127
phone: 386-761-6810
meadhunt.com
FL Cert. #26730

These documents shall not be used for any purpose or project for which it is not intended. Mead & Hunt shall be indemnified by the client and held harmless and defended from all claims, damages, liabilities, losses, and expenses, including attorneys' fees and costs, arising out of such misuse or reuse of the documents. In addition, unauthorized reproduction of these documents, in part or as a whole, is prohibited.

CITY OF HOLLY HILL LIFT STATION #13 REHABILITATION

DUBS DRIVE/5TH STREET
HOLLY HILL FL

ISSUED

02/08/19	60% DESIGN
03/20/19	90% DESIGN
04/2019	REVISED
05/02/19	BID SET
1 05/31/19	BID ALT. 1

ISSUED FOR BIDDING

M&H NO.: 1000710-181066.01
DATE: MAY 2019
DESIGNED BY: CN
DRAWN BY: ADC
CHECKED BY: AMG
DO NOT SCALE DRAWINGS

SHEET CONTENTS
DETAILS

SHEET NO.
C-502

Attachment: Holly Hill Lift Station 13 - Addendum 3 (2019-R-38 : Lift Station #13 Rehabilitation)

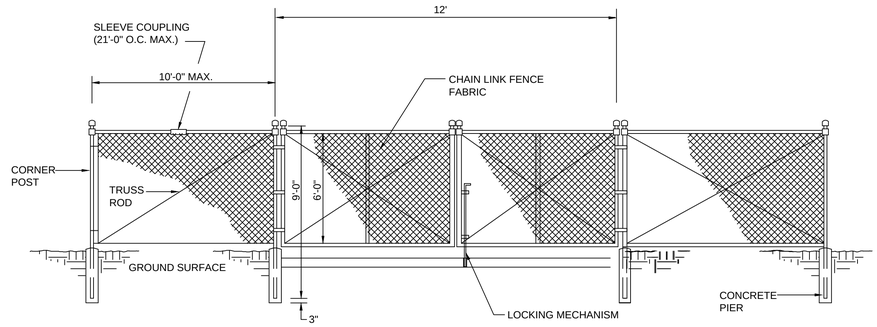

15 **DOUBLE SWING GATE**
NTS

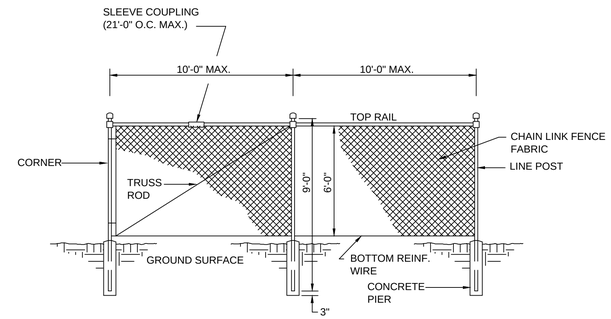

NOTES:

1. BRACE FENCE POSTS IN BOTH DIRECTIONS ON EITHER SIDE OF GATE.
2. BRACE CORNER POSTS IN BOTH DIRECTIONS ALONG FENCE LINE.
3. FENCE TO BE LOCATED 1'-0" FROM PROPERTY LINE.

13 **CHAIN LINK FENCE**
NTS

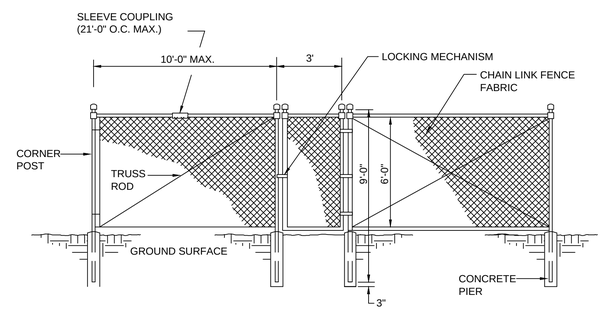

14 **SINGLE SWING GATE**
NTS

Mead & Hunt
Mead and Hunt, Inc.
4401 Eastport Parkway
Port Orange, FL 32127
phone: 386-761-6810
meadhunt.com
FL Cert. #26730

These documents shall not be used for any purpose or project for which it is not intended. Mead & Hunt shall be indemnified by the client and held harmless and defended from all claims, damages, liabilities, losses, and expenses, including attorneys' fees and costs, arising out of such misuse or reuse of the documents. In addition, unauthorized reproduction of these documents, in part or as a whole, is prohibited.

CITY OF HOLLY HILL LIFT STATION #13 REHABILITATION

DUBS DRIVE/5TH STREET
HOLLY HILL FL

ISSUED

02/08/19	60% DESIGN
03/20/19	90% DESIGN
04/2019	REVISED
05/02/19	BID SET
1 05/31/19	BID ALT. 1

ISSUED FOR BIDDING

M&H NO.: 1000710-181066.01
DATE: MAY 2019
DESIGNED BY: CN
DRAWN BY: ADC
CHECKED BY: AMG
DO NOT SCALE DRAWINGS

SHEET CONTENTS
DETAILS

SHEET NO.
1 C-503

Attachment: Holly Hill Lift Station 13 - Addendum 3 (2019-R-38 : Lift Station #13 Rehabilitation)

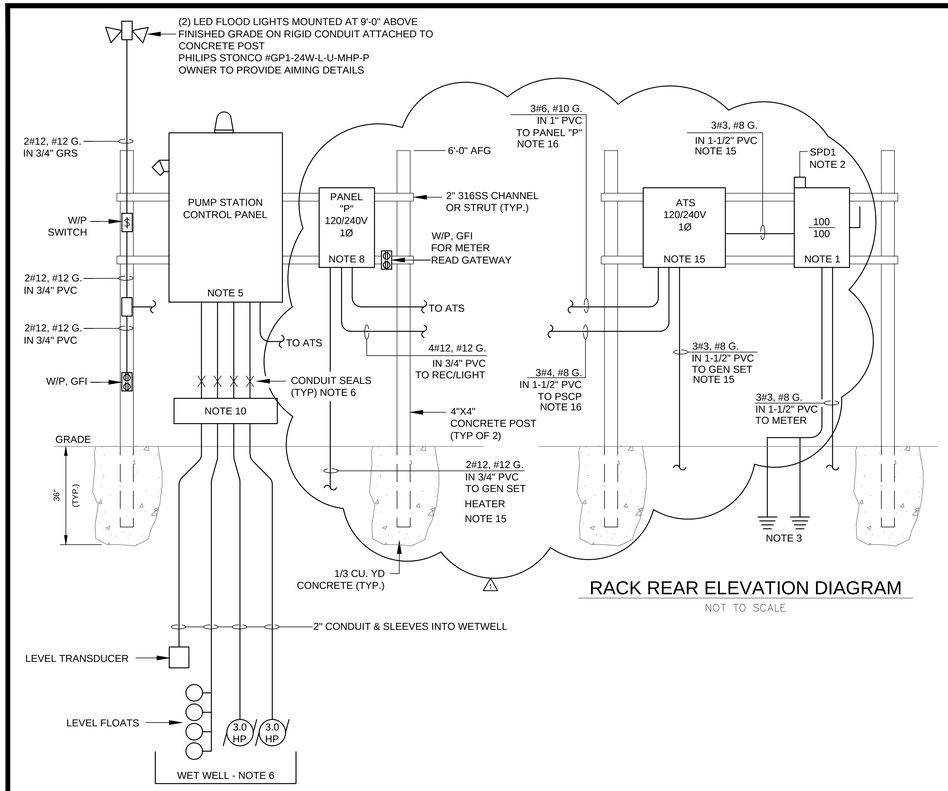

RACK REAR ELEVATION DIAGRAM

NOT TO SCALE

RACK FRONT ELEVATION DIAGRAM

NOT TO SCALE

NOTES:

1. 100 AMP, 2-POLE, SOLID NEUTRAL, FUSIBLE, HEAVY DUTY, NEMA 4X DISCONNECT WITH 100 AMP CLASS RK-1 FUSES. LABEL AS "SERVICE DISCONNECT".
2. SURGE ARRESTOR, SQUARE-D #SDSA1175 OR APPROVED EQUIVALENT.
3. SERVICE GROUND TO INCLUDE #6 BARE COPPER RUN TO (2) 3/4" X 10'-0" COPPER ELECTRODES SPACED AT LEAST 10'-0" APART AND BONDED TO WET WELL EQUIPMENT RACK, CONTROL PANELS, TELEMETRY PANELS, WET WELL TOP PLATE AND ALL SECURITY FENCE POSTS. MEASURED RESISTANCE TO GROUND SHALL BE BE 25 OHMS OR LESS. EXOTHERMIC WELD GROUNDING ELECTRODE CONDUCTOR TO RODS.
4. ALL CONDUITS AND FITTINGS SHALL BE SCH80 PVC UNLESS NOTED OTHERWISE.
5. CONTROL PANEL SHALL BE FURNISHED BY PUMP VENDOR. MOUNT ON THE RACK PER DETAIL AND PROVIDE POWER SUPPLY, WIRING, ETC. TO SERVE NEW LIFT STATION EQUIPMENT. CONTROL PANEL WILL INCLUDE VISIBLE AND AUDIBLE ALARM FOR HIGH FLOW CONDITION AND INCLUDE ELAPSED RUN TIME METERS FOR EACH PUMP AND GENERATOR RECEPTACLE.
6. PROVIDE RACEWAYS, SLEEVES AND SEAL-OFF FITTINGS FOR CABLING TO WET WELL FOR FLOAT SWITCHES AND PUMP PROVIDED BY VENDOR. PROVIDE CONDUIT SEALS 12 IN. ABOVE GRADE.
7. LEVEL FLOATS, LEVEL SENSOR AND MOTORS INCLUDING CABLES AND CONNECTIONS TO BE PROVIDED BY PUMP & CONTROL PANEL VENDOR. COORDINATE INSTALLATION AND WIRING ACCORDINGLY. MAKE ALL TERMINATIONS AS REQUIRED BY THAT VENDOR USING APPROVED MATERIALS AND METHODS.
8. INSTALL PANEL "P" INSIDE A 20" x 16" x 8" NEMA 4X 316SS HINGED DOOR BOX WITH A PAD LOCKABLE HANDLE.
9. FROM THE NEW UTILITY METER PROVIDE 3#1, #8G IN 1-1/2" PVC TO THE FPL OVERHEAD SERVICE DROP.
10. MOUNT A 16" x 16" x 6" NEMA 4X 316SS HINGED COVER TERMINAL BOX WITH INSULATED TERMINAL STRIP TO FACILITATE PUMP REMOVALS.
11. SERVICE SHALL BE UNDERGROUND 240V, SINGLE PHASE FROM FPL. COORDINATE SERVICE SOURCE AND CONNECTION WITH FPL.
12. ALL WIRING SHALL BE THWN, COPPER UNLESS OTHERWISE NOTED.
13. CONTRACTOR SHALL COMPLY WITH ALL LOCAL CODES INCLUDING THE CURRENTLY ENFORCED VERSION OF THE NEC.
14. EXISTING WOOD UTILITY POLE WITH EXISTING ANTENNA. PROVIDE NEW ELECTRICAL SERVICE DROP, METER AND RECONNECT ANTENNA TO NEW STATION CONTROL PANEL. DEMOLISH ALL ASSOCIATED ELECTRICAL ASSOCIATED WITH EXISTING LIFT STATION AND PREVIOUS SERVICE. MOUNT NEW METER CAN ON EXISTING POLE. PROTECT AS NECESSARY DURING CONSTRUCTION TO MAINTAIN CONTINUITY OF SERVICE TO EXISTING STREET LIGHT. REFER TO NOTE 9.
15. BID ALTERNATE #1 - DISCONNECT, REMOVE AND RELOCATE EXISTING GENERATOR AND AUTOMATIC TRANSFER SWITCH FROM EXISTING LIFT STATION 28. REINSTALL AND RECONNECT AS SHOWN.
16. AS PART OF THE BASE BID, ROUTE CONDUIT AND CABLING TO 100A DISCONNECT IN LIEU OF THE ATS.

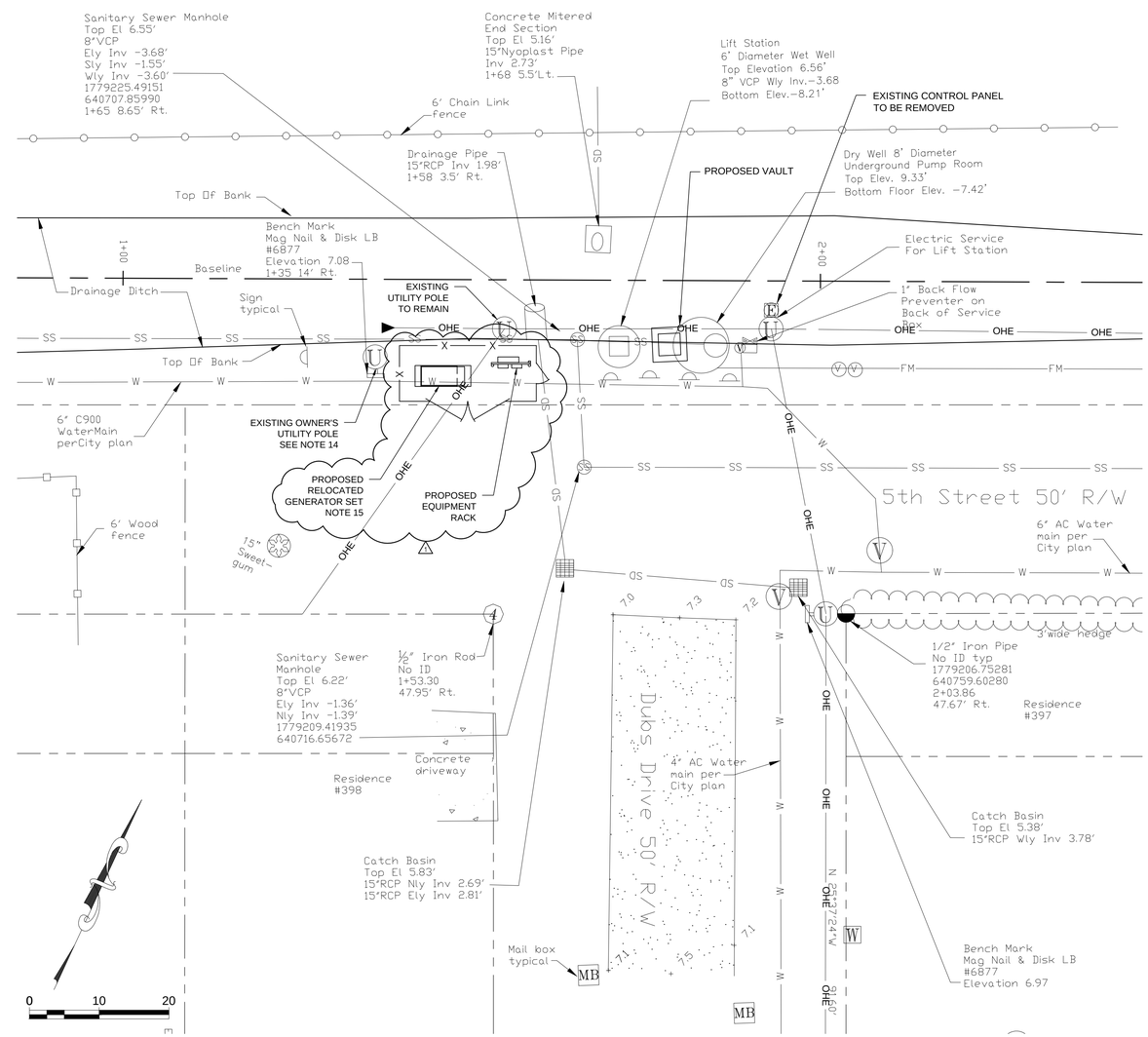

PANEL: P							
MFG. SQ D	VOLTAGE 120/240	PHASE 1	WIRE 3				
CAT. QO612L60S	AMPS. 100	SYM. A.I.C. 10,000					
MOUNT SURFACE	MAIN LUG	GRD. BUS X					
NEMA 1 ENCL MOUNTED IN NEMA 4X ENCLOSURE PER NOTE 7 .							
CT	DESCRIPTION	POLE	AMPS	WIRE	COND	Ø A	Ø B
1	RECEPTACLE	1	20	#12	1/2"		
2	FLOOD LIGHTS	1	20	#12	1/2"		
3	RTU ANTENNA	1	20	#12	1/2"		
4	MAIN-BACK FED	2	60	#6	1"		
5	METER READ GATEWAY	1	20	#12	1/2"		
6	GEN SET HEATER	1	20	#12	1/2"		

Mead & Hunt
Mead and Hunt, Inc.
4401 Eastport Parkway
Port Orange, FL 32127
phone: 386-761-6810
meadhunt.com
FL Cert. #26730

These documents shall not be used for any purpose or project for which it is not intended. Mead & Hunt shall be indemnified by the client and held harmless and defended from all claims, damages, liabilities, losses, and expenses, including attorneys' fees and costs, arising out of such misuse or reuse of the documents. In addition, unauthorized reproduction of these documents, in part or as a whole, is prohibited.

CITY OF HOLLY HILL LIFT STATION #13 REHABILITATION

DUBS DRIVE/5TH STREET
HOLLY HILL FL

ISSUED

02/08/19	60% DESIGN
03/20/19	90% DESIGN
04/2019	REVISED
05/02/19	BID SET
1 05/31/19	BID ALT. 1

ISSUED FOR BIDDING

M&H NO.: 1000710-181066.01
DATE: MAY 2019
DESIGNED BY: CN
DRAWN BY: ADC
CHECKED BY: AMG
DO NOT SCALE DRAWINGS

SHEET CONTENTS
ELECTRICAL PLAN AND DETAILS

SHEET NO.
E-001

Attachment: Holly Hill Lift Station 13 - Addendum 3 (2019-R-38 : Lift Station #13 Rehabilitation)

SECTION 00 30 00
PROPOSAL

FOR

CITY OF HOLLY HILL
LIFT STATION #13 REHABILITATION
BID NO. 19WW05
(To be completed in Duplicate)

Bidder's Name:_____

Submitted: _____, 20

City of Holly Hill
City Clerk
1065 Ridgewood Avenue
Holly Hill, FL 32117

Gentlemen:

The undersigned, as Bidder, hereby declares that the only person or persons interested in the Proposal, as principal or principals, is or are named herein and that no other persons than herein mentioned has any interest in the Proposal or the Contract to which the work pertains; that this Proposal is made without connection or arrangement with any other person, company, or parties making a bid or proposal and that the Proposal is in all respects fair and made in good faith without collusion or fraud.

The Bidder further declares that he has examined the site of the work and that from personal knowledge and experience, or that he/she has made sufficient test holes and/or other subsurface investigations to fully satisfy self that such site is a correct and suitable one for this work and he/she assumes full responsibility therefore; that he/she is familiar with all legal requirements (Federal, State and local laws, ordinances, rules and regulations) pertaining to the Work; that he/she has examined the Drawings and Specifications for the work and from his/her own experience or from professional advice that the Drawings and Specifications are sufficient for the work to be done and he/she has examined the other Contract Documents and all addenda relating thereto, and that he/she has satisfied himself/herself fully, relative to all matters and conditions with respect to the work to which this Proposal pertains.

The Bidder proposes and agrees, if this Proposal is accepted, to contract with the City of Holly Hill , (Owner) in the form of contract specified, to furnish all necessary materials, equipment, machinery, tools, apparatus, transportation, and labor and to perform all work necessary to complete the Work specified in the Proposal and other Contract Documents.

The Bidder further proposes and agrees to comply in all respects with the time limits for commencement and completion of the Work as stated in the Contract Form.

Attachment: Holly Hill Lift Station 13 - Addendum 3 (2019-R-38 : Lift Station #13 Rehabilitation)

The Bidder further agrees that the deductions for liquidated damages, as stated in the Contract Form, constitute fixed and agreed liquidated damages to reimburse the Owner for additional costs to the Owner resulting from the Work not being completed within the time limit stated in the Contract Form.

The Bidder further agrees to execute a Contract and furnish satisfactory Performance and Payment Bonds, each in the amount of one-hundred percent of the Contract price, and the required Certificates of Insurance, within ten consecutive calendar days after written notice being given by the Owner of the award of the Contract, and the undersigned agrees that in case of failure on his/her part to execute the said Contract, Performance and Payment Bonds and Insurance Certificates within ten (10) consecutive calendar days after the award of the Contract, the bid guarantee accompanying his/her bid and the money payable thereon shall be paid to the Owner as liquidation of damages sustained by the Owner; otherwise, the bid guarantee shall be returned to the undersigned within fifteen days after the Contract is signed and the Performance and Payment Bonds and Insurance Certificates are filed.

The undersigned agrees to accept as full compensation for completion of the project in full compliance with the Contract Documents, the unit prices for the items named in Section 00 31 00, Schedule of Unit Prices, submitted herein with this Proposal.

The undersigned offers to furnish all materials, equipment and labor for construction of **"LIFT STATION #13 REHABILITATION",** for the City of Holly Hill, Florida, complete in every respect in strict accordance with the drawings, specifications and any future changes therein. The Contractor shall perform these obligations for the prices listed in the "Schedule of Unit Prices: Section 00 31 00" attached and made a part of this Bid. **The bid total is:**

_____

(In Words)

Dollars $_____(In Figures)

Bid Alternate 1 is:

_____

(In Words)

Dollars $_____(In Figures)

COMPLETION TIME OF CONTRACT

The Contractor agrees that the work shall be started not later than the date indicated in the Notice to Proceed and that the total work shall be substantially completed within **150 days** and final completion within **30 days** of substantial completion**.**

The Contractor further agrees that for each calendar day, with the exception of Sundays and legal holidays that any work shall remain uncompleted after the stations completion times stipulated above the sum of **$1,000 (One Thousand Dollars)** per day shall be deducted from monies due the contractor, not as a penalty, but as liquidated damages. If the Contractor is declared in default in accordance with the provisions of the Specifications, liquidated damages shall be charged as provided herein, and such amounts shall be deducted from the final amount payable to the Contractor or his/her Surety. Should the total amount chargeable as liquidated damages exceed the amount due or payable to the Contractor or his/her Surety, then such excess shall be paid to the Owner by the Contractor or his/her Surety.

SUPPLEMENTAL REQUIREMENTS

The following documents are attached to and made a condition of this bid:

Schedule of Unit Prices: Section 00 31 00
Statement of Bidder's Qualifications: 00 32 00
Listing of Subcontractors: Section 00 33 00
Listing of Previous Experience: Section 00 33 10
Bid Bond: Section 00 41 00
Public Entity Crimes Statement: Section 00 47 00
Anti-Collusion Statement: Section 00 48 00
Drug Free/Tie Preference Statement: Section 00 48 50
Trench Safety Affidavit: Section 00 49 00
Certificate as to Corporate Principal: Section 00 62 00
City of Holly Hill Insurance Requirements: Section 00 80 00A
W9 Request for Taxpayer Identification Number and Certification

REQUIRED DISCLOSURE

At its sole discretion, the City of Holly Hill, Florida may reject any bidder the City finds to lack, or whose present or former executive employees, officers, directors, stockholders, partners or owners are found by the City to lack honesty, integrity, or moral responsibility. The discretion of the City may be exercised based on the City's own investigation, public records, or any other reliable sources of information. By submitting a bid, bidder recognizes and accepts that the City may reject the bid based upon the exercise of its sole discretion and bidder waives any claim it might have for damages or other relief resulting from the rejection of its bid based on these grounds.

Attachment: Holly Hill Lift Station 13 - Addendum 3 (2019-R-38 : Lift Station #13 Rehabilitation)

SCHEDULE OF MAJOR MANUFACTURERS AND SUPPLIERS

The equipment manufacturers/suppliers on this project shall be as delineated in the following schedule. Bidders should note that the Owner and Engineer have made rigorous investigations of equipment performance and features, and as a result, Bidders are to note that the contract price for this project shall be based on Base Bid equipment. The Base Bid equipment for this project falls under one of two categories. The first category is equipment that the Owner and Engineer have determined will be supplied by a sole source of supply, for which no substitutions or alternates will be entertained or allowed. Bidder is advised that offering of any alternatives to the sole source supplied equipment will be grounds for rejection of his bid as not responsive. The second category of equipment includes those items where the Owner and Engineer deem there to be more than one acceptable supplier of the particular item listed. The equipment which falls under these two categories is a shown on the subsequent pages of this Schedule of Major Manufacturers and Suppliers. Bidder is advised that the award of this Contract will be based solely on the use of Base Bid equipment.

The following comments relate only to the second category of equipment, where the Contract Documents are based upon the equipment or products available from the suppliers denoted as A, B, C, etc. below. These equipment manufacturers, along with the sole source suppliers constitute the Base Bid.

Provision is made in the Contract Documents for alternate manufacturers and suppliers whose equipment or product may be deemed equivalent in quality (see General Conditions). However, the Bidder must indicate in his Bid which Base Bid supplier he intends to use for each item of equipment listed by circling one of the listed manufacturers/suppliers. If the Bidder fails to indicate which listed manufacturer/supplier he intends to use if an alternate is rejected, he must use the supplier listed as "A". Also, if the Bidder circles more than one listed supplier, he must use the first supplier circled (unless an alternate is approved).

If the Bidder desires to propose one or more alternate manufacturers/suppliers, he may write in the name of such alternates in the spaces provided on the Alternate Manufactures/Suppliers page following the schedule. He must, nevertheless, also circle one of the listed manufacturers/suppliers because Bidders' Bid price must be based upon this Base Bid list. Wherever an alternate supplier is proposed, the Bidder must insert the amount to be deducted from the Contract Price (either lump sum or unit price) if the alternate supplier is eventually approved. If the proposed alternate supplier is determined "not equivalent" by the Engineer, the Bidder must use the circled supplier.

For any alternate supplier accepted by the Owner, the Contract Price will be reduced by the deductive amount stated in the Bid. However, the Contract Price will not be adjusted for any alternate supplier rejected.

Each proposed alternate will be evaluated in accordance with the General Conditions.

The deductive amount specified for alternate manufacturers/suppliers will not be used in determining the successful Bidder. Alternates will be considered only after award of the contract.

Attachment: Holly Hill Lift Station 13 - Addendum 3 (2019-R-38 : Lift Station #13 Rehabilitation)

The Contractor shall reimburse the Owner for any costs directly attributable to the change in suppliers, such as additional field trips for the Engineer, additional redesign costs, additional review and inspection costs, etc.

The Owner may request and the Bidder shall supply complete information on proposed alternates prior to the Notice of Award.

Attachment: Holly Hill Lift Station 13 - Addendum 3 (2019-R-38 : Lift Station #13 Rehabilitation)

SCHEDULE OF MAJOR MANUFACTURERS
AND SUPPLIERS

Category I - Sole Source Equipment Items:

Item No.	Spec. No.	Equipment/Material	Manufacturer or Supplier
1	333220	Collection System Submersible Pumps	A) ABS

Category II - Major Equipment Items:

NONE

Attachment: Holly Hill Lift Station 13 - Addendum 3 (2019-R-38 : Lift Station #13 Rehabilitation)

ALTERNATE MANUFACTURERS/SUPPLIERS

EQUIPMENT ITEM MATERIAL	SPEC. SECTION	ALTERNATIVE MANUFACTURER / SUPPLIER (LIST ONE ONLY)	DEDUCTIBLE AMOUNT (indicate whether lump sum or unit price) ALTERNATE
1. _____	_____	_____	_____
2. _____	_____	_____	_____
3. _____	_____	_____	_____
4. _____	_____	_____	_____
5. _____	_____	_____	_____
6. _____	_____	_____	_____
7. _____	_____	_____	_____
8. _____	_____	_____	_____
9. _____	_____	_____	_____
10._____	_____	_____	_____

_____

Name (signature) Date

_____

Name (typed and printed)

_____

Title

Attachment: Holly Hill Lift Station 13 - Addendum 3 (2019-R-38 : Lift Station #13 Rehabilitation)

ACKNOWLEDGMENT OF ADDENDA

Addenda will be issued via email and it is the Bidder's responsibility to confirm that all addenda have been received prior to submitting a bid for the project. Acknowledgment is hereby made of the following Addenda received since issuance of Drawings and Specifications:

Addendum No. _____ Dated: _____ Addendum No. _____ Dated:
Addendum No. _____ Dated: _____ Addendum No. _____ Dated:
Addendum No. _____ Dated: _____ Addendum No. _____ Dated:

Attached hereto is a cashier's check on the _____ Bank of

_____ or Bid Bond for the sum of

_____Dollars (_____),

made payable to _____(Owner).

_____
(Name of Bidder) (Affix Seal)

_____
(Signature of Officer)

_____
(Title of Officer)

_____
Name of Bidder

_____
Address

_____
City/State/Zip

_____
Telephone

_____
Contractor's Florida License Number

The full names and residences of persons and firms interested in the foregoing bid, as principals, are as follows:

_____

_____

_____

_____

END OF SECTION

Attachment: Holly Hill Lift Station 13 - Addendum 3 (2019-R-38 : Lift Station #13 Rehabilitation)

SECTION 00 31 00
SCHEDULE OF UNIT PRICES

CITY OF HOLLY HILL
LIFT STATION #13 REHABILITATION
BID# 19WW05

ITEM NO.	*DESCRIPTION*	*QTY*	*UNIT*	*UNIT COST*	*TOTAL*
1	Preconstruction Video	1	LS		
2	Demolition	1	LS		
3	Bypass Pumping	1	LS		
4	Complete Lift Station	1	LS		
5	Electrical	1	LS		
6	Tie-Ins				
	a) Tie-In to Existing Force Main	1	LS		
7	DIP Fittings Add or Delete	1000	LBS		
8	Cap and Abandon Existing Old Force Main	1	LS		
9	Permits and Allowances	1	LS	$10,000.00	
10	As-Built Plans	1	LS		
11	MOT	1	LS		
12	Restoration	1	LS		
13	Rock Rip Rap Bank Protection incl. Bedding Rock & Filter Fabric	36	SY		
				BASE BID TOTAL	

Bid Alt 1	Relocate and Install Generator	1	LS		

Submitted by: _____
Contractor: _____
Address: _____
Telephone: _____ Fax: _____
State of Florida Certified General Contractor or Underground Contractor (Required Information)
Licensee: _____ License No: _____

SECTION 01 22 00

UNIT PRICES

PART 1 – GENERAL

A. Separate payment will be made only for the items of work described herein and listed on the Bid Form. Any related work not specifically listed, but required for satisfactory completion of the work, shall be considered to be included in the scope of the appropriate listed work items.

B. The CONTRACTOR's attention is called to the fact that cleanup is considered a part of the work of construction. No payment will be made until cleanup is essentially complete.

C. No separate payment will be made for the following items and the cost of such work shall be included in the applicable pay items of work if not shown as a separate pay item.

1. Clearing and Grubbing.

2. Excavation, including necessary pavement base removal.

3. Shoring and sheeting.

4. Dewatering and disposal of surplus water.

5. Structural Fill.

6. Backfill.

7. Grading.

8. Replacement of unpaved roadways, grass, and shrubbery plots.

9. Cleanup.

10. Testing and placing system in operation.

11. Any material and equipment required to be installed and utilized for the test.

12. Pipe, structures, pavement replacement and/or appurtenances included within the limits of lump sum work.

13. Maintaining the existing quality of service during construction.

Attachment: Holly Hill Lift Station 13 - Addendum 3 (2019-R-38 : Lift Station #13 Rehabilitation)

14. Appurtenant work as required for a complete and operable system.

15. Maintaining or detouring of traffic.

D. No payment shall be made for work constructed outside the authorized limits of work

PART 2 – MATERIALS AND EQUIPMENT

2.01 Pre-Construction Video **Bid Item 1**

Lump sum payment will be made based on delivery to the City of two copies with documentation of the video for the project route. The contract lump sum price shall be full compensation for all materials and work necessary to complete the professional videotaping in accordance with the project specifications. Construction work shall not start until DVD's are delivered and approved by the project representative.

2.02 Demolition of Existing Lift Station **Bid Item 2**

Lump sum payment shall be made for the demolition, removal, abandonment, filling, and/or other work to existing facilities as shown on the plans and as required to complete the required work. Restoration, including fill required, shall be included. Demolished facilities shall be shown on the as-builts. City shall have right to all abandoned equipment. CONTRACTOR shall deliver to City or dispose of properly. CONTRACTOR is responsible for proper disposal of all removed materials.

2.03 Bypass Pumping **Bid Item 3**

Lump sum payment will be made at the completion of the operational lift station for temporary bypass pumping. The bypass pumping system shall be duplex pumps and each pump shall be capable of passing the flows with one unit on standby. Temporary systems shall be automatic float operated and switch over to standby, have cellular alarm notification, and have a noise level no greater than 70 dba at seven (7) meters.

2.04 Complete Lift Station **Bid Item 4**

Lump sum payment will be made for the pumps, rails, top slab, hatch, new wetwell, valves, valve vault, yard piping, mechanical equipment, restoration, and all other items necessary for a complete installation. This includes all materials, equipment and labor required to construct the station as shown on the plans and described in the specifications.

2.05 Electrical **Bid Item 5**

Lump sum payment shall be made for the installation of all Electrical equipment as shown on the plans and described in the specifications. Payment will be full compensation for furnishing all plant labor, materials, equipment, and electrical work to integrate and connect the new motors, lighting, control panels, junction boxes, cables, wiring, and miscellaneous components required

Attachment: Holly Hill Lift Station 13 - Addendum 3 (2019-R-38 : Lift Station #13 Rehabilitation)

to complete all electrical work in accordance with the contract plans, specifications, the National Electric Code and FBC. CONTRACTOR shall obtain requisite electrical permits prior to commencement of work.

2.06 Tie-Ins **Bid Item 6**

Payment will be made at the applicable unit price for the cost of the "tie-in" performed. The lump sum price will be full compensation for all pipe, valves, fittings, materials and labor required to satisfactorily accomplish this item as detailed in the plans and specifications.

2.07 DIP Fittings (Add or Delete) **Bid Item 7**

Payment shall be made at the contract unit price per pound for all ductile iron/cast iron fittings installed by the CONTRACTORs as directed by the ENGINEER. This item is included in the CONTRACTOR cover the cost of additional fittings that are not shown on the project plans which are required to meet modified routing due to field conditions. This item includes the cost of providing and installing "restrained joints" at both ends of each additional fitting installed.

2.08 Cap and Abandon Existing Force Main **Bid Item 8**

Lump sum payment shall be made for satisfactory abandonment of the existing lines as shown on the plans. Payment shall be full compensation for grouting the abandoned portion of the existing force main as shown on the plans.

2.09 Permit Allowance **Bid Item 9**

An allowance is established to pay costs associated with building permit fees and ancillary costs associated with construction of the lift station improvements. No provisions for mark-up are included within the allowance.

2.10 As-Built Plans **Bid Item 10**

Lump sum payment will be made based on delivery of record drawings produced by a licensed surveyor conforming to the specifications. Periodical record drawings shall be submitted with each pay estimate on which the ENGINEER shall rely to ensure the improvements are constructed in accordance with the design locations and elevations. Progress payments submitted without updated record drawings to document work constructed that pay period shall be a basis for rejection of the pay request until such time as adequate record drawings are submitted.

2.11 MOT **Bid Item 11**

Payment for traffic control will be made at the contract lump sum price which price and payment shall be full compensation for the material, labor, equipment, and all other related work necessary to complete required traffic control during the period of construction affecting the flow of traffic within the project area or adjacent collector roads and highways. This item shall include the costs to prepare approved traffic control plans as well as the full cost to implement

Attachment: Holly Hill Lift Station 13 - Addendum 3 (2019-R-38 : Lift Station #13 Rehabilitation)

the approved plans. For areas under County or State control, traffic control shall be provided in accordance with each entity's requirements. Payment shall be made based on the percent of the total construction cost completed.

2.12 Restoration **Bid Item 12**

At the completion of construction, lump sum payment shall be made for site restoration to provide positive drainage, acceptable finish grades, base and pavement restorations. Sod shall match existing materials or as called out within the plans and specifications. All pavement, sod, grading for a final site acceptable to the City and their project representative are included in this pay item.

2.13 Rock Rip Rap Bank Protection incl. Bedding Rock & Filter Fabric **Bid Item 13**

Payment shall be made at the applicable unit price for rock rip rap installed. Payment shall be full compensation for furnishing all plant labor, materials and equipment necessary to furnish and properly install the rip rap within the limits shown on the drawings. This item includes filter fabric and bedding rock required for under rock.

2.14 Relocate and Install Generator **Bid Alt 1**

Lump sum payment shall be made to relocate generator currently installed at Lift Station 28 to Lift Station 13. Payment shall include all necessary demolition generator ATS and associated conduit and wiring to source, concrete pad shall remain at Lift Station 28. Installation as Lift Station 13 shall include concrete pad, relocate water main, fencing, bollards, rock, conduit and wiring to install the relocated generator. This includes all materials, equipment and labor required to construct the improvements as shown on the plans and described in Addendum 3.

PART 3 – EXECUTION (NOT USED)

END OF SECTION

Addendum 4

Project name:	Lift Station #13 Rehabilitation	Client:	City of Holly Hill
Project location:	Holly Hill	Client representative:	Walt Smyser
Project number:	RFQ 19-WW-05	Mead & Hunt, Inc. manager:	Kevin A. Lee
Date:	June 4, 2019	Mead & Hunt Inc. phone:	(386) 761-6810

TO ALL BIDDERS: You are requested to make all changes and/or additions contained in this Addendum to the Bidding Documents. Failure to acknowledge this Addendum in Proposal shall result in rejection of bid.

I. GENERAL

1. Questions and answer below are provided to detail the generator relocation scope further.

2. The following information regarding Lift Station 28 electrical and generator are attached:
   a. Lift Station 28 generator submittal data
   b. Electrical plans for Lift Station 28

BID DATE AND TIME SHOULD CORRESPOND TO DATE AND TIME INDICATED IN ADVERTISEMENT FOR BIDS, UNLESS DATE AND TIME HAS BEEN CHANGED IN THIS OR PREVIOUS ADDENDUMS.

QUESTIONS

1. Will the bid date be changed do to the limited time to evaluate LS 28 for the removal of the ATS and generator?

   Answer: No

2. Lift station 28 will require bypass to control gravity flows, what is the GPM and TDH for the station?

   Answer: The City will provide bypass pumping, if needed. Lift Station 28 is a small station that primarily serves a commercial center north of the lift station. The shutdown for electrical work shall be limited to 48 hrs.

Attachment: Holly Hill Lift Station 13 - Addendum 4 (2019-R-38 : Lift Station #13 Rehabilitation)

3. The contractor is responsible for the transportation of the generator. What size is the fuel tank, will fuel be removed prior to transporting? (over 100 gallons must be moved via hazmat certified transporter)

   Answer: The generator submittal data is attached for more information. Fuel tank is 50 gallons, generator shall be relocated with fuel remaining in the tank.

4. How heavy is the generator?

   Answer: The generator submittal data is attached for more information.

5. Is there an additional start up for the generator?

   Answer: The generator shall be test run by the Contractor after installation. However; no startup services from the generator manufacturer are required to be provided by the Contractor.

END OF ADDENDUM

Disclaimer: This addendum was posted on Vendor Link. It is the sole responsibility of the bidder to confirm that all addenda have been received prior to submitting bid and acknowledge such in the bid documents.

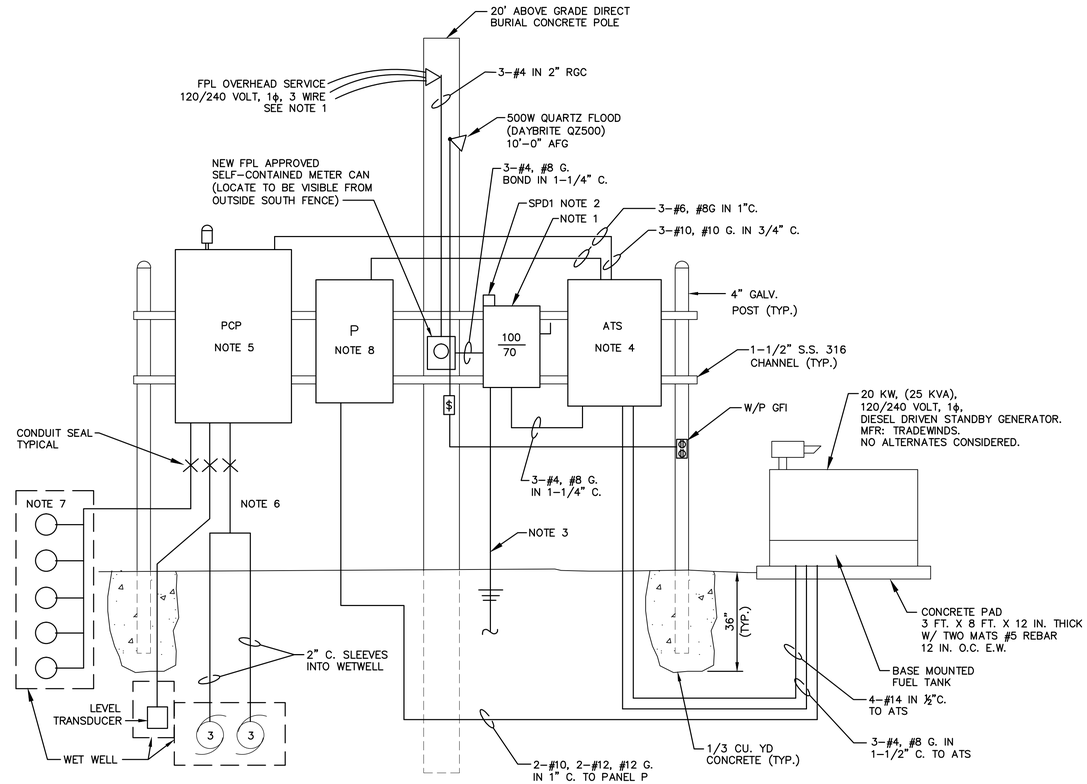

SERVICE RISER DIAGRAM

NOT TO SCALE

LIFT STATION #8A RISER NOTES :

1. 100 AMP TWO POLE SOLID NEUTRAL THREE FUSE NEMA 4X DISCONNECT WITH 70 AMP CLASS RK-1 FUSES. LABEL AS "SERVICE MAIN DISCONNECT". FEED NOTE THREE EQUIPMENT AS SHOWN.
2. SPD1 TO BE SURGE ARRESTOR, LATER OR APPROVED EQUAL.
3. SERVICE GROUND TO INCLUDE #8 COPPER, RUN TO EACH OF 2-20' DRIVEN ELECTRODES 20' ON CENTER AND GENERATOR SLAB REBAR.
4. PROVIDE 150 AMP TWO POLE SOLID NEUTRAL WEATHERPROOF AUTOMATIC TRANSFER SWITCH 22,000 AIC AT 240 VOLTS. REFER TO SPECIFICATIONS FOR ADDITIONAL DETAILS.
5. CONTROL PANEL TO BE FURNISHED BY PUMP VENDOR. MOUNT ON THE RACK PER DETAIL AND PROVIDE POWER SUPPLY, WIRING, ETC. TO SERVE NEW LIFT STATION EQUIPMENT. CONTROL PANEL TO INCLUDE VISIBLE AND AUDIBLE ALARM FOR HIGH FLOW CONDITION AND INCLUDE ELAPSED RUN TIME METERS FOR EACH PUMP AND GENERATOR RECEPTACLE.
6. PROVIDE CONDUIT SLEEVES AND SEAL-OFFS INTO WET WELL FOR FLOAT SWITCHES AND PUMP CABLES PROVIDED BY VENDOR WITH CONTROL PANEL ASSEMBLY. PROVIDE CONDUIT SEALS 12 IN. ABOVE GRADE TO PREVENT MOISTURE AND GAS INTRUSION INTO CONTROL PANEL.
7. LEVEL SWITCHES AND MOTORS INCLUDING CABLES AND CONNECTIONS TO BE PROVIDED BY PUMP CONTROL PANEL VENDOR. COORDINATE INSTALLATION AND WIRING ACCORDINGLY. MAKE ALL TERMINATIONS AS REQUIRED BY THAT VENDOR USING APPROVED MATERIALS AND METHODS.
8. PROVIDE PANEL P PER SCHEDULE.

PANEL: P

MFG. SQ D VOLTAGE 120/240 PHASE 1 WIRE 3
CAT. QO120L100S AMPS. 100 SYM. A.I.C. (I.E.R.) 22,000
MOUNT STRUT MAIN 60/2 C/B-BACK FED GRD. BUS X
IN NEMA 4X ENCL.

CT	DESCRIPTION	POLE	AMPS	WIRE	COND	Ø A	Ø B
1	SPARE	1	20	#12	1/2"		
2	OUTLET/LIGHT	1	20	#12	1/2"		
3	BATT. CHARGER	1	20	#12	1"		
4	BLOCK HEAT	1	30	#10	1"		

LIFT STATION No. 28

PAUL M. ESTES, P.E.
ELECTRICAL CONSULTANT
615 NORTH PENINSULA DRIVE
DAYTONA BEACH, FL. 32118
(386)-252-6948
FL. REG. PE # 33651

No.	BY	REVISIONS	DATE	No.	BY	REVISIONS	DATE

QUENTIN L. HAMPTON ASSOCIATES, INC.
CONSULTING ENGINEERS
FLORIDA CERTIFICATE-of-AUTHORIZATION No. 626
PHONE: (386) 761-6810 FAX: (386) 761-3977
P.O. DRAWER 290247, PORT ORANGE, FL. 32129-0247

CITY of HOLLY HILL
VOLUSIA COUNTY, FLORIDA

LIFT STATIONS 8, 11A AND 28 REHABILITATION
PROJECT No. HH091

ELECTRICAL
DRAWN BY: RRW

KEVIN A. LEE, P.E.
FLORIDA REGISTRATION #71501

S:\HH\HH091 2011 CRA WW LS Improvements\Cad\Design\HH091 Electrical.dwg, Electrical2, 5/22/2012 8:53:00 AM, DWG To PDF.pc3, RW

Attachment: Holly Hill Lift Station 13 - Addendum 4 (2019-R:38 : Lift Station #13 Rehabilitation)

TRADEWINDS
POWER CORP
5820 NW 84th Avenue Miami, Florida 33166
Tel 305-592-9745 FAX 305-592-7461
www.tradewindspower.com

Filters
Pump Sets
Power Units
Generator Sets
Automatic Engine Controls

TO: City Of Holly Hill
454 LPGA Boulevard
Holly Hill, FL 32117-
Tel: (386)-248-9463 Fax: (386)-248-9499
Attn:

Quotation # PS11036Q Sub Single Ph.
June 8, 2012

Lift Station 28

We are pleased to offer this Quotation as detailed below

Amount	Description	Each	Extended
1	**Model TJ125 Base Awarded Tradewinds Generator Set under FSA contract No. 11-19-0907, Spec #83 Low Bid.**		
1	**Deduct for Model TP20-UL-FS Tradewinds UL 2200 Landbase Generator Set;**		
	20 KW (20 KVA) Standby, 18 KW (18 KVA) Prime Power 120/240 Volts [reconnectable], 60 Hz, Single Phase, 1.0 Power Factor Amp Load Capacity: 83; Load Bank tested.		
	Perkins Diesel engine, Model 404D-22G TIER 3 @ 1800 RPM complete with 12 Volt Electrics, Radiator & Guard		
	Oversized Brushless Single Bearing Alternator with PMG and DVR 2000 E Automatic Voltage Regulator and Vibration Isolation Mounts		
	Tradewinds Deluxe Digital Instrument/Control Panel with Safety Shutdowns Complete with DC Voltmeter, Hourmeter, Oil and Temperature Gauges Frequency Meter, Ammeter & Voltmeter with Phase Selector Switch, Engine Cool Down Timer, Remote "E" Stop Contacts, Remote Auto Start Control, Low Fuel Level Alarm, J - 1939 Code readout, NFPA 110 Compliant, On/off Switch, 3 D.C. Breakers, 1 A.C. Breaker, and Emergency Push Button.		
	Optional Equipment not included in above pricing:		
	Battery Cables Battery Rack Battery Charger Critical Silencer Stainless Steel Flex Exhaust Connection Heavy Duty Canister Type Air Cleaner Jacket Water Heater 100 Amp Circuit Breaker, UL Rated 50 Gallon, UL Approved, Steel Subbase Fuel Tank with Rear Electrical Stub-up Area, 4 - 20ma for Fuel Level and Low Fuel Level Alarm. Drop Over, Aluminum Sound Enclosure with Vertical Discharge Air, Stainless Steel Hardware, Keyed Alike Doors, Panel Cover, and Muffler Mounted In Front Turn Hood. A 1" Thick Sound Barrier will be Installed on Interior Walls For Additional Sound Absorption. Oil and Water Drain Lines with Brass Ball Valves and Bulk Head Fittings. Initial Fill of Oil and Antifreeze Full Load Factory Test with Safety Shutdown checks One Complete Operation and Maintenance Manual Shipped with Unit. Two (2) year/ 1000hr Standby Warranty		
	Net cost adder for corrosion resistant paint on subbase fuel tank, upgrade to 100 gallon fuel tank size, upgrade to DVR 2000 E with PMG voltage regulator, Aluminum exhaust rain cap, wet battery, customer interface junction box, 12vdc shunt trip on main breaker and required interface points.		
	Model TT600 Automatic Transfer Switch was Awarded to Tradewinds under FSA contract No. 11-19-0907, Spec #85.		
	Cost deduct for TT87150-FS Thomson Technology Automatic Transfer Switch rated as follows:	-	
	150amp, 120/240vac, 1ph, 60hz, Thomson Technology Automatic Transfer Switch mounted in a NEMA 3r cabinet.		
	Model TT600 Automatic Transfer Switch was Awarded to Tradewinds under FSA contract No. 11-19-0907, Spec #85.		
	Cost deduct for TT87SS-100-200-FS Stainless Steel Option to be add to the above switch.	-	
	Sub Total, FOB our warehouse, Miami, Florida		
	Onsite Start-up and building load test	Inc.	Inc.
	Delivery to the City of Melbourne, Fl. Curbside. Off-Loading by others.	Inc.	Inc.
	Total		
	State & Local Tax as Applicable		
	Estimated Shipping date from receipt of order: 6 - 8 Weeks		

Price Validity: 45 days; 15% Cancellation Charge for Restocking.
Wire-Transfer: Tradewinds Power Corp Division of Southeast Diesel Corp
F/B/O PNC Bank
Acct# 8025724597 ABA# 031207607

Paul Staples

Attachment: Holly Hill Lift Station 13 - Addendum 4 (2019-R-38 : Lift Station #13 Rehabilitation)

TP20-ULT3

Power When You Need It!

TRADEWINDS
GENERATOR SETS

Powered by:
Perkins

Sample Unit

Generator Ratings @ 1800 RPM						
Voltage	Ph	Hz	Standby Output kW (kVA)	Prime Output kW (kVA)	Standby Max Amp Output	Number of Wires
120/240	1	60	20 (20)	18 (18)	83	12
120/208	3	60	20 (25)	18 (23)	69	12
120/240	3	60	20 (25)	18 (23)	60	12
277/480	3	60	20 (25)	18 (23)	30	12

Standard Generator Set Features

- **Perkins Diesel Engine Model 404D-22G Tier 3**
- AC, Single bearing direct coupled alternator with class 'H' insulation, sized for 130°C temperature rise.
- Engine and alternator mounted on vibration isolators.
- Radiator sized for 120°F ambient clearance.
- High coolant temp. and low oil pressure safety shutdowns.
- Dry type air cleaner.
- 12-VDC Starter, engine mounted battery charging alternator, battery cables and rack along with grounding strap.
- Microprocessor based control panel w/ metering, alarms, shut down, under / over frequency & voltage protection.

c UL US

Optional Equipment

- Weather protective enclosure constructed of marine grade aluminum 0.125 thickness, SS hardware white powder coat paint finish on both sides sound insulation resistant to high temperatures, fuel and oil. Hinged, removable, keyed alike doors residential rated interior mounted exhaust silencer vertical radiator and exhaust discharge. Oil & coolant drain lines with brass check valves.
- Mainline circuit breaker.
- Digital or analog control panels.
- Automatic transfer switch.
- Starting battery.
- Automatic battery chargers 6 or 10 amps.
- Thermostat controlled jacket water heater.
- Low coolant level switch.
- Single wall tanks.
- UL 142 fuel tanks.
- Day tanks.
- Water separator fuel filter.
- Space heater.
- Permanent Magnet Generator (PMG) with voltage regulator upgrade
- Generator drip covers.
- 17 Light remote annunciator panel.
- 120V Receptacle for battery charger and / or coolant heater.
- D.O.T trailers, single or dual axle with brakes.
- Custom color option

*Stand by ratings are applicable for the duration of any power outage. No overload is available at these ratings. Prime ratings are continuous per BS 5514, DIN 6271, ISO3046 & IEC 34-1. Overload capacity on prime-power ratings is 10% for one hour in each twelve hours of operation. All single phase ratings are based on a 1.0 power factor, three (3) phase ratings based on a 0.8 power factor. Ratings are established based on 85°F (29°C) and an elevation of 1,000 feet (305 meters). Please consult your **Tradewinds** representative for information concerning derates for temperature, altitude & humidity.

Manufactured by:
Tradewinds Power Corp • 5820 NW 84th Avenue • Miami, FL 33166 • 800-223-3289 www.tradewindspower.com

Attachment: Holly Hill Lift Station 13 - Addendum 4 (2019-R-38 : Lift Station #13 Rehabilitation)

TP20-ULT3

Power When You Need It!

Engine Specifications

Model: Perkins 404D-22G Tier 3
Max. power: 32 bhp / 24 kWm@ 1800 rpm
Cubic capacity: 135 in³ / 2.216 L
Bore & stroke: 3.31" x 3.94" (84mm x100mm)
Natural aspiration, 4 cylinder vertical in-line, 4 stroke
Indirect injection.
Governor type: Mechanical.
Frequency regulation: Isochronous, steady-state.
Fluids: Oil capacity total system - 7.40 quarts (10.6 liters).
Coolant capacity w/ radiator - 2.80 gallons (7.0 liters).

Fuel Consumption: US gallon (liters) /hr @ 1800 rpm
50% load - 0.90 (3.4)
75% load - 1.24 (4.7)
100% load - 1.64 (6.2)
General: Oil filter - spin-on type.
Air filter– Dry element type.
Electrical system: 12v Starter, 65 amps alternator DC output.
Minimum recommended battery size: 875 CCA
Fuel type: BS 2869: Part 2 1998 Class A2 or ASTM D975 D2

Alternator Specifications

Marathon Electric: Brushless, 4pole rotating field.
Voltage regulation: + / - 1%, Volts/Hertz, electronic, EMI filtered.
Class insulation: 'H' to NEMA MG-1-1.66
Rated temperature: Standby 130 C° rise / 40 C° ambient.
Coupling: SAE adapter, flexible disc, direct.
Load acceptance: One step, 100% per NFPA 110.

Features: Self ventilated drip-proof construction.
Superior voltage waveform achieved by a 2/3 pitch and skewed rotor.
Vacuum-impregnated windings with fungus-resistant epoxy for dependability and long-life.
Compliance with NEMA, IEEE and ANSI standards for temp. rise.
Sustained short-circuit capability enabling down-line circuit breakers to trip without collapsing the generator field.
No load to full-load regulation of +/- 2%.

Control Panel Specifications

DGC2020
Microprocessor based, navigation key with large LCD display, event recording transfer switch control (main failures).
SAE J1939 CANBUS communication multilingual capability. Suitable for rental application. Remote communication capability (optional).

Operational features
- Alternator protection: under / over voltage, under / over frequency.
- Engine protection: Low oil pressure, high coolant temperature,over speed & over crank, sender unit failure, fuel leak/fuel sender failure, battery charger failure.
- All protections are programmable as alarms or pre-alarms.
- Operating power: Nominal 12-24 Vdc. consumption 14.2W run mode.
- Metering (ample range): Volts, current, Hz, watts, VA, Pf, oil pressure, coolant temperature, rpm, DC volts, fuel level, engine running time.
- Engine control with timers.
- External remote start input (on or off load).
- 16 programmable contact inputs.
- 7 Contact outputs.

Agency Approvals : UL 508 R CSA C22.2 No 14 NFPA 110
CE Compliance : EC LVD-73/23/EEC EN 61000-6-4:2001 EMC EN 50178:1997 EMC- 89/336/EEC EN 610000 6-2:2001 EMC Immunity

One complete set Owners / Operators, Engine, Alternator and Accessory manuals

Dimensional and Mounting Specifications

Inches (mm): 75 (1905) L x 32 (813) W x 48 (1219.2) H w/ Enclosure Only Less Fuel Tank
Estimated Overall Dry Weight lb. (kg): 2200 (998) Less Fuel Tank

Note: The above dimensions and weights would change if a sub-base fuel tank was added. An electrical stub area is positioned at the rear of the sub-base fuel tanks. Spacing from rear access cover to the tank is approximately 9 inches (228.6 mm).

Specifications are subject to change without notice

Authorized Dealer:

Manufactured by:
Tradewinds Power Corp • 5820 NW 84th Avenue • Miami, FL 33166 • 800-223-3289 www.tradewindspower.com

UL 2200 LISTED PRODUCT

TRADEWINDS MODEL

TJ-30 TP-9 TI-40
TJ-35 TP-14
TP-20

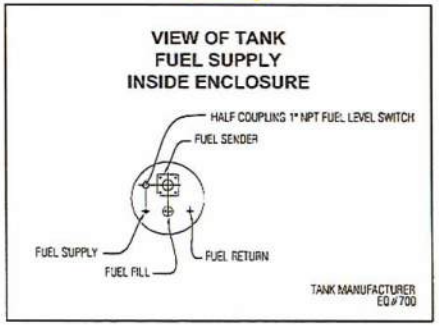

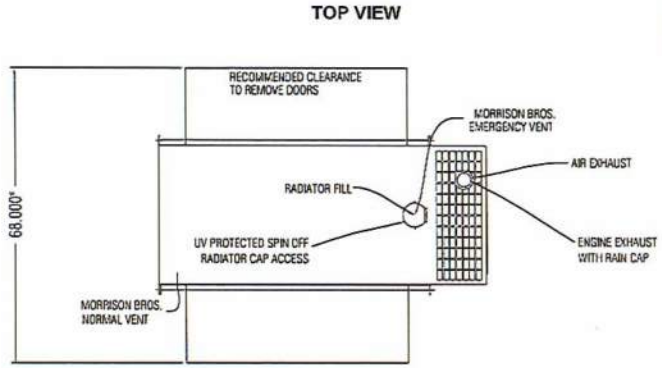

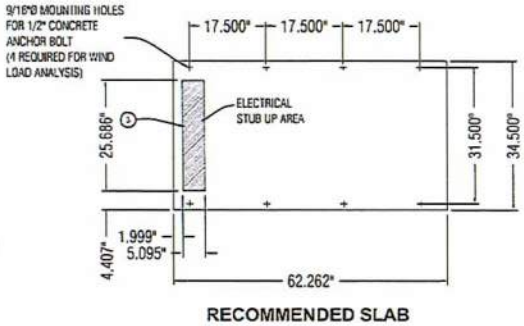

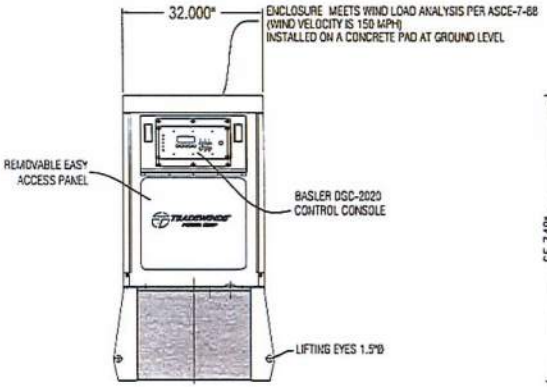

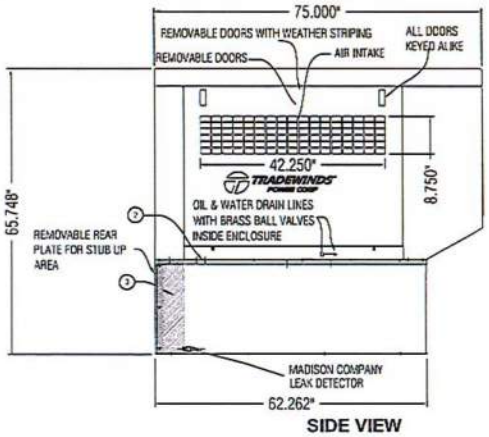

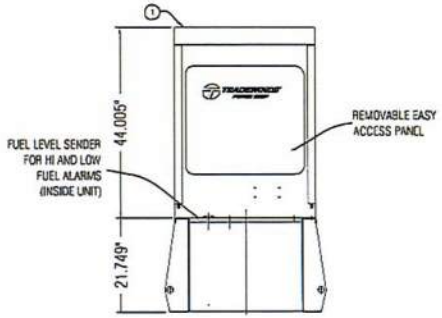

REFRENCE NOTES

1. ENCLOSURE CONSTRUCTED FROM A MARINE GRADE ALUMINUM WITH A POWER COAT FINISH APPLIED. ENCLOSURE ASSEMBLED USING STAINLESS STEEL HARDWARE
2. VIBRATION ISOLATORS MOUNTED BETWEEN SUB BASE AND GENERATOR SET
3. ELECTRICAL STUB UP ARE USED FOR: GENERATOR LOAD LEADS, A/C POWER FEED FOR JACKET WATER HEATER AND BATTERY CHARGER IF PROVIDED, CONTROL WIRES FOR ATS CONTACTS IF NEEDED

NOTE:

ALL DIMENSIONS, SPECIFICATIONS, MATERIALS CAN CHANGE WITHOUT PRIOR NOTICE

THE INFORMATION CONTAINED HEREON IS CONFIDENTIAL INFORMATION AND IS THE SOLE PROPERTY OF TRADEWINDS POWER CORP. ANY USE, DUPLICATION, RETENTION, OR TRANSMITTAL TO OTHERS WITHOUT WRITTEN PERMISSION OF TRADEWINDS POWER CORP., IS PROHIBITED. TRADEWINDS POWER CORP

TRADEWINDS POWER CORP

BATCH NO:	
WORK ORDER NO.:	
PART NO.: 880117 & 880154	
REF: A ENCLOSURE ON A 100 GALLON UL DOUBLE WALL TANK	
PO#	
DATE: 05/06/2008	SHEET NO.: 1 OF 1
FILE NO.:	CHKED BY:
ORG. NO.: 880117 & 880154	APVED BY:
DRAWN BY: SS	REVISION:
SCALE: NONE	

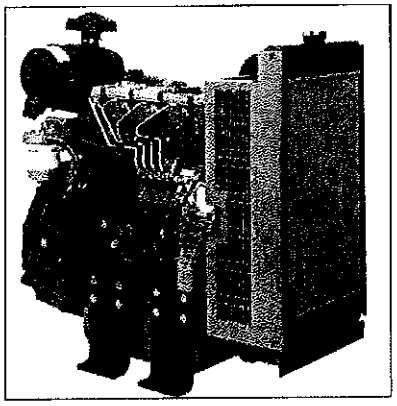

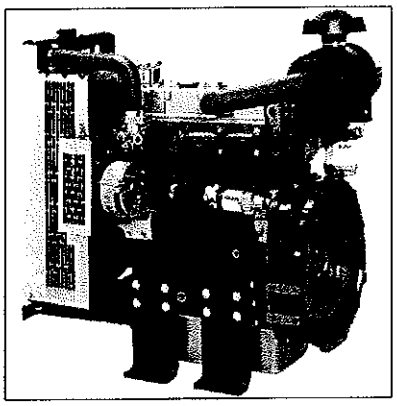

Perkins®

400 Series

404D-22G

Diesel Engine - ElectropaK

20.3 kWm @ 1500 rev/min
23.9 kWm @1800 rev/min
33.4 kWm @ 3000 rev/min

The 400 Series engine family continues to set new standards in the compact engine market. Developed alongside customers to fulfill their needs in the Genset, Compressor, Agricultural and general Industrial markets.

These new ElectropaKs provide compact power, from a robust family of 3 and 4 cylinder diesel engines designed to provide economic and durable operation at Prime and Standby duties, hitting the key power nodes required by the power generation industry.

Powered by your needs

- The 404D-22G ElectropaK is a powerful but quiet 2.2 litre naturally aspirated 4-cylinder compact package

Compact, Clean, Efficient Power

- Design features on the 400D range of ElectropaKs ensures clean rapid starting in all conditions whilst delivering impressive performance with low operating costs in a small, efficient package size

Lower Operating Costs

- The compact package Size makes Installation and transportation easier and more cost effective
- Operating and maintenance costs are reduced through excellent fuel and oil economy
- Service intervals are set at 500 hours as standard and Perkins provides comprehensive warranty cover for two years, with three years on major engine components. A low usage warranty package is also available

Long-term Power Solution

- The 400D range of ElectropaKs has been designed to fully comply with stringent EU and EPA emissions regulations, providing an emissions compliant power solution for the future

World-class Product Support

- At Perkins we are constantly researching, developing and investing in our products and services. Total worldwide support is provided through a network of distributors and service outlets, providing access to over 50,000 parts and exchange units 24 hours a day, 365 days a year. This support is enhanced by TIPSS (The Integrated Parts and Service System). TIPSS enables customers to electronically specify and order parts as well as service 400 Series engines with online guides and service tools

Emissions statement

- Certified against the requirements of EU2007 (EU 97/68/EC Stage II) and EPA Interim Tier 4 (EPA 40 CFR Part 1039 Interim Tier 4) legislation for non-road mobile machinery, powered by constant speed engines

Engine Speed	Type of Operation	Typical Generator Output (Net)		Engine Power			
				Gross		Net	
		kVA	kWe	kWm	bhp	kWm	bhp
1500	Prime Power	20.2	16.2	18.7	25.1	18.4	24.6
	Standby Power	22.3	17.9	20.6	27.6	20.3	27.2
1800	Prime Power	24.0	19.2	22.0	29.5	21.6	29.0
	Standby Power	26.6	21.3	24.3	32.6	23.9	32.1
3000	Prime Power	33.6	26.9	31.2	41.8	30.2	40.8
	Standby Power	37.2	29.7	34.4	46.1	33.4	44.8

The above ratings represent the engine performance capabilities to conditions specified in ISO 8528/1, ISO 3046/1:1986, BS 5514/1.

Derating may be required for conditions outside these; consult Perkins Engines Company Limited.
Generator powers are typical and are based on typical alternator efficiencies and a power factor (cos ϕ) of 0.8.

Fuel specification: BS 2869: Part 2 1998 Class A2 or ASTM D975 D2.

Rating Definitions
Prime Power: Power available at variable load in lieu of a main power network. Overload of 10% is permitted for 1 hour in every 12 hours operation.

Standby (maximum): Power available at variable load in the event of a main power network failure. No overload is permitted.
Photographs are for illustrative purposes only and may not reflect final specification.

All information in this document is substantially correct at time of printing and may be altered subsequently

Publication No. 1912/05/08 Produced in England ©2008 Perkins Engines Company Limited

Attachment: Holly Hill Lift Station 13 - Addendum 4 (2019-R-38 : Lift Station #13 Rehabilitation)

400 Series

404D-22G

Standard ElectropaK Specification

Air Inlet
- Mounted air filter

Fuel System
- Mechanically governed cassette type fuel injection pump
- Split element fuel filter

Lubrication System
- Wet steel sump with filler and dipstick
- Spin-on full-flow lub oil filter

Cooling System
- Thermostatically-controlled system with belt driven coolant pump and pusher fan
- Mounted radiator, piping and guards

Electrical Equipment
- 12 volt starter motor and 12 volt 65 amp alternator with DC output
- Oil pressure and coolant temperature switches
- 12 volt shut off solenoid energised to run
- Glow plug cold start aid and heater/starter switch

Flywheel and Housing
- 1500/1800 rev/min
- High inertia flywheel to SAE J620 Size 7½ Heavy
- Flywheel housing SAE 4 Long
- 3000 rev/min
- High inertia flywheel to SAE J620 Size 7½ Light
- Flywheel housing SAE 4 Short

Mountings
- Front and rear engine mounting bracket

Optional Equipment
- Workshop manual
- Parts book

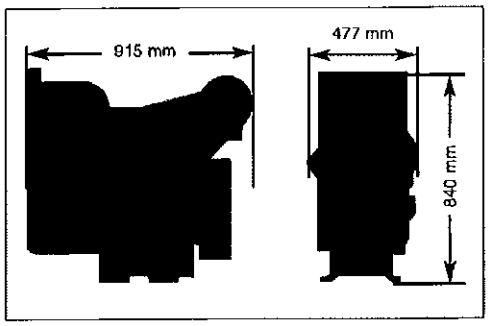

Fuel Consumption		
Engine Speed	g/kwh	l/hr
Standby	252	7.1
Prime power	245	6.2
75% of prime power	247	4.7
50% of prime power	269	3.4

General Data

Number of cylinders	4
Cylinder arrangement	Vertical in-line
Cycle	4 stroke
Aspiration	Naturally aspirated
Combustion system	Indirect injection
Compression ratio	23.3:1
Bore and Stroke	84 x 100 mm
Displacement	2.216 litres
Direction of rotation	Anti-clockwise viewed on flywheel
Cooling system	Water cooled
Total coolant capacity	7.0 litres
Total Lubrication system capacity	10.6 litres
Length	915 mm
Width	477 mm
Height	840 mm
Total weight (dry)	242 kg

Final weight and dimensions will depend on completed specification.

Perkins®

Perkins Engines Company Limited
Peterborough PE1 5NA
United Kingdom
Telephone +44 (0)1733 583000
Fax +44 (0)1733 582240
www.perkins.com

Distributed by

All information in this document is substantially correct at time of printing and may be altered subsequently
Publication No. 1912/05/08 Produced in England ©2008 Perkins Engines Company Limited

Attachment: Holly Hill Lift Station 13 - Addendum 4 (2019-R-38 : Lift Station #13 Rehabilitation)

MAGNAPLUS®

MARATHON ELECTRIC
SYNCHRONOUS AC GENERATOR
TYPICAL SUBMITTAL DATA

Basic Model: **284PSL1742** Winding: **WC1742** Date: **7/1/04**

Kilowatt ratings at **1800** RPM **60** Hertz **12** Leads

kW (kVA) 1 Phase **Dripproof or Open** Enclosure

Voltage at - p.f.	Class B 80° C ① Continuous	Class F 90° C ① Lloyds	95° C ① ABS	105° C ② British Standard	105° C ① Continuous	130° C ① Standby	Class H 125° C ② British Standard	125° C ① Continuous	150° C ① Standby
480/240 - 1.0	25.0 (25.0)	26.0 (26.0)	26.0 (26.0)	30.0 (30.0)	30.0 (30.0)	32.0 (32.0)	32.0 (32.0)	32.0 (32.0)	35.0 (35.0)
480/240 - 0.8	20.0 (25.0)	21.0 (26.3)	21.0 (26.3)	23.0 (28.8)	23.0 (28.8)	25.0 (31.3)	25.0 (31.3)	25.0 (31.3)	27.0 (33.8)
440/220 - 1.0	23.0 (23.0)	24.0 (24.0)	24.0 (24.0)	28.0 (28.0)	28.0 (28.0)	30.0 (30.0)	30.0 (30.0)	30.0 (30.0)	32.0 (32.0)
440/220 - 0.8	18.0 (22.5)	19.0 (23.8)	19.0 (23.8)	21.0 (26.3)	21.0 (26.3)	23.0 (28.8)	23.0 (28.8)	23.0 (28.8)	25.0 (31.3)

① Rise by resistance method, Mil-Std-705, Method 680.1b. *② Rating per BS 5000.*

Submittal Data: 240 Volts, 1800 RPM, 60Hz, 1 Phase

Mil-Std-705B Method	Description	Value
301.1b	Insulation Resistance	> 1.5 Meg
302.1a	High Potential Test	
	Main Stator	2000 volts
	Main Rotor	1500 volts
	Exciter Stator	1500 volts
	Exciter Rotor	1500 volts
401.1a	Stator Resistance, Line to Line	
	Low-Zigzag: 0.09 Ohms Hi-Zigzag:	0.36 Ohms
	Rotor Resistance	0.55 Ohms
	Exciter Stator	17.5 Ohms
	Exciter Rotor	0.12 Ohms
410.1a	No Load Exciter Field Amps at 240 Volts Line to Line	0.50 A DC

Mil-Std-705B Method	Description	Value
505.3b	Overspeed	2250 RPM
601.4a	L-L Harmonic Maximum - Total (Distortion Factor)	<5%
601.4a	L-L Harmonic Maximum - Single	<5%
---	Type	Ext. Voltage Regulated, Brushless
----	Insulation	Class H
----	Coupling - Single Bearing	Flexible
----	Amortisseur Windings	Full
----	Cooling Air Volume	250 CFM
----	Exciter	Rotating
----	Voltage Regulator	SE350
----	Voltage Regulation	1%

TYPICAL MOTOR STARTING CHARACTERISTICS

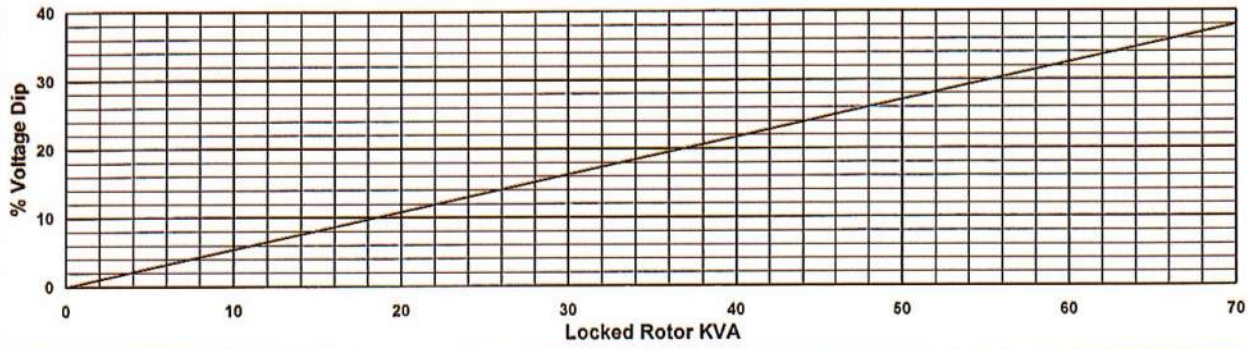

TYPICAL GENERATOR EFFICIENCY

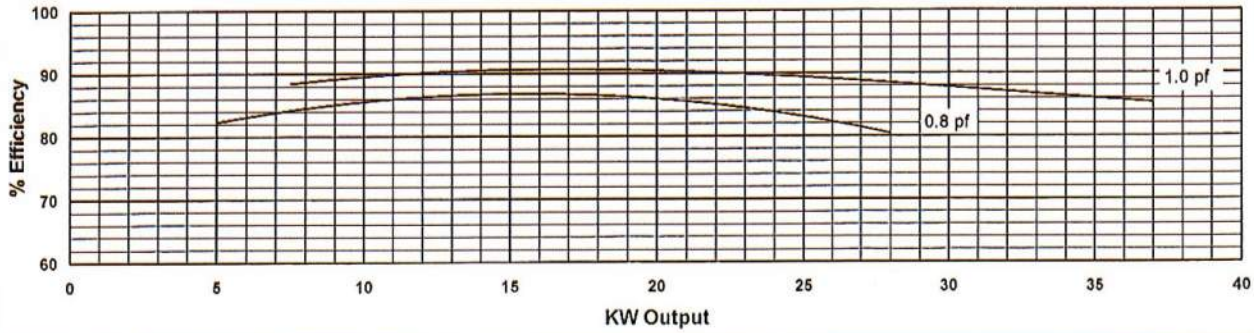

Attachment: Holly Hill Lift Station 13 - Addendum 4 (2019-R-38 : Lift Station #13 Rehabilitation)

MAGNAPLUS®

MARATHON ELECTRIC
SYNCHRONOUS AC GENERATOR
TYPICAL DYNAMIC CHARACTERISTICS

Basic Model: **284PSL1742** Winding: **WC1742** Date: **7/1/04**

60 HERTZ

LOAD APPLICATION

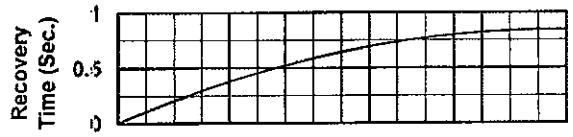

LOAD REJECTION

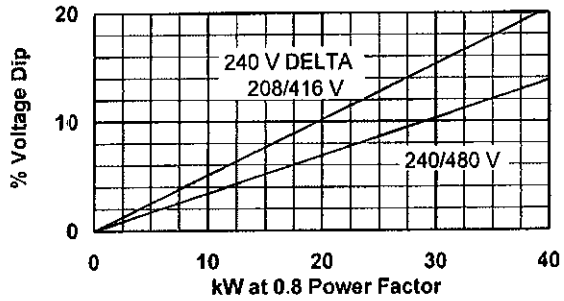

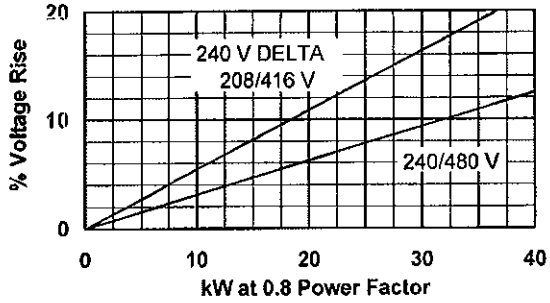

TYPICAL MOTOR STARTING CHARACTERISTICS

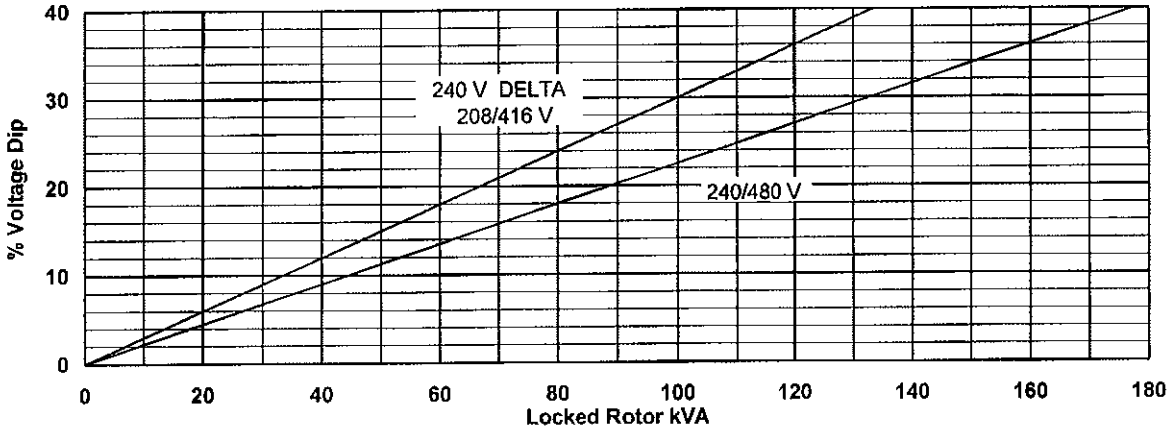

TYPICAL GENERATOR EFFICIENCY

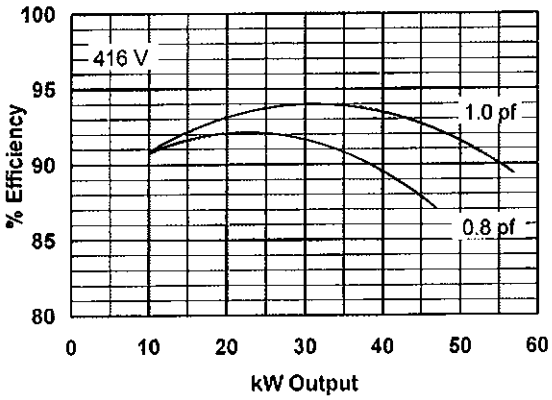

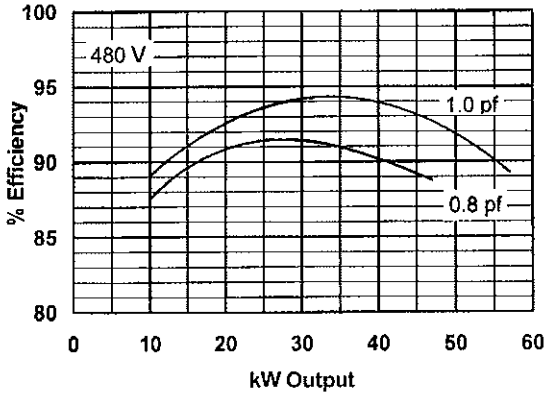

Voltage refers to wye (star) connection, unless otherwise specified.

Attachment: Holly Hill Lift Station 13 - Addendum 4 (2019-R-38 : Lift Station #13 Rehabilitation)

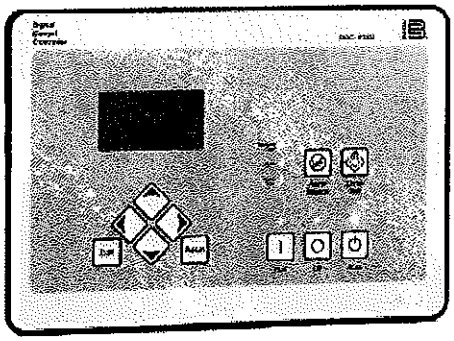

DGC-2020 DIGITAL GENSET CONTROLLER

Basler Electric's Digital Genset Controller (DGC-2020) is a highly advanced integrated genset control system. The DGC-2020 is perfectly focused, combining rugged construction and microprocessor technology to offer a product that will hold up to almost any environment and flexible enough to meet your application's needs. This device provides genset control, transfer switch control, metering, protection and programmable logic in a simple, easy to use, reliable, rugged, and cost effective package.

Program the DGC-2020 with easy to use front panel navigation keys and the large LCD display or with our enhanced BESTCOMSPlus PC software. Either way, the easy to follow menus make setup and configuration fast and simple. Within BESTCOMSPlus, we have provided a very powerful user-friendly programmable logic program that allows the user to meet specifications that previously would have required an additional PLC to meet. BESTCOMSPlus is included at no additional cost and provides for remote communications, file transfer, and file management. It is one of the most intuitive software programs available for genset controllers.

FEATURES

- Generator Metering
- Engine Metering
- Genset Control
- Engine Protection
- Generator Protection (27, 59, 81O, 81U)
- BESTCOMSPlus (included with every DGC-2020 at no additional cost)
  - Programming and setup software
  - Intuitive and powerful
  - Remote control and monitoring
  - Programmable Logic
  - USB communications
- Automatic Transfer Switch Control
- Automatic Synchronizer (optional)
- Suitable for use on rental gensets with
  - Hi/Lo line sensing
  - Single or three phase sensing override
- SAE J1939 Engine ECU communications
- Multilingual capability
- Remote communications to our RDP-110 Remote Annunciator
- Extremely rugged, fully encapsulated design
- 16 programmable contact inputs
- 7 Contact outputs: (3) 30 Adc and (4) Programmable 2 Adc rated contacts
- Wide Ambient Temperature range
- Additional (8) Programmable 2 Adc contacts (optional)
- Remote Dial-out and Dial-in capability with Internal Modem (optional)
- Enhanced Generator Protection 51 and 47 available (optional)
- Modbus Communications with RS-485 (optional)
- Expandable I/O capabiity via J1939 CANBUS (optional)
- UL recognized, CSA certified, CE approved
- HALT (Highly Accelerated Life Tests) tested
- IP 54 Front Panel rating with integrated gasket
- NFPA110 Level Compatible

DESCRIPTION, FUNCTIONS and SPECIFICATIONS pages 2 through 5

FRONT PANEL DISPLAY and DIMENSIONS pages 5 and 6

INTERCONNECT DRAWING page 7

ORDERING INFORMATION page 8

ADDITIONAL INFORMATION

INSTRUCTION MANUAL

Request Publication 9400200990

Basler Electric

ROUTE 143, BOX 269 HIGHLAND, ILLINOIS 62249, U.S.A. PHONE 618-654-2341 FAX 618-654-2351

SNJ-1
10-06

Attachment: Holly Hill Lift Station 13 - Addendum 4 (2019-R-38 : Lift Station #13 Rehabilitation)

DESCRIPTION

The DGC-2020 is a microprocessor based generator set controller that incorporates advanced technology and features into a value added, user friendly, rugged design. This device is encapsulated and is the most rugged genset controller found anywhere. It provides front panel and PC programmability. It can sense engine parameters directly via analog senders, or it can communicate with the engine's ECU using SAE J1939 CANBUS communications. This device offers programmable inputs and outputs and programmable logic to allow the user to easily customize the operation of the DGC-2020 as desired. .The DGC-2020 also has automatic transfer switch control (mains failure).

The DGC-2020 can be configured by a customer selected style number. This allows the user to only purchase what is needed, adding to the value of the DGC-2020 controller. The DGC-2020 can be configured to have eight additional output contacts, an internal RS-485, an internal industrial modem for remote communications and dialing out to a pager when the DGC-2020 detects trouble. The DGC-2020 also has optional features for enhanced generator protection, and an integrated automatic synchronizer.

FUNCTIONS

GENSET PROTECTION

Generator (Standard Protection)

Undervoltage (27) Underfrequency (81U)
Overvoltage (59) Overfrequency (81O)

Enhanced Generator Protection (Optional)

Phase Imbalance (47)
Generator Overcurrent (51)

All Generator Protection features are programmable as Alarms or Pre-alarms.

Engine

Alarms (Shutdowns)	*Pre-Alarms (Warnings)*	
Low Oil Pressure	Low Oil Pressure	Engine kW Overload
High Coolant Temperature	High Coolant Temperature	Maintenance Interval Timer
Low Coolant Level	Low Coolant Temperature	Low Coolant Level
Overspeed	Battery Overvoltage	High Fuel Level
Overcrank	Weak Battery	Low Fuel Level
Engine Sender Unit Failure	Battery Charger Failure	Fuel Leak Detect
Fuel Leak/Fuel Sender Failure	Engine Sender Unit Failure	
Emergency Stop		
Battery Charger Failure		

All Alarms and Pre-Alarms can be enabled or disabled via the BESTCOMSPlus PC software or the front panel.

GENSET METERING

- Metered generator parameters include voltage, current, Hz, real power (watts), apparent power (VA), and power factor.
- Metered engine parameters include oil pressure, coolant temperature, RPM, battery voltage, fuel level, engine runtime, and various J1939 supported parameters.

ENGINE CONTROL

Cranking Control: Cycle or Continuous (Fully Programmable)
Engine Cooldown: Smart Cooldown function saves fuel and engine life.
Successful Start Counter: Counts and records successful engine starts
Timers:

- Engine Cooldown Timer
- Engine Maintenance Timer
- Pre-Alarm Time Delays for Weak/Low Battery Voltage
- Alarm Time Delay for Overspeed
- Alarm Time Delay for Sender Failure
- Arming Time Delays after Crank Disconnect:
  - Low Oil Pressure
  - High Coolant Temperature
- Pre-Crank Delay
- Continuous or Cycle Cranking Time Delay

EVENT RECORDING

The DGC has an event recorder that provides a record of alarms, pre-alarms, engine starts, engine runtime loaded, engine runtime unloaded, last run date, and many other events that are all date and time stamped to help the user determine the cause and effect of issues related to the generator set.

TRANSFER SWITCH CONTROL (MAINS FAILURE)

The DGC-2020 monitors utility (mains) and determines if it is providing power that is suitable for the loads. If the utility (mains) goes beyond predetermined levels, the generator is started and the utility (mains) is disconnected from the load and the generator is connected. When the utility (mains) returns to acceptable levels for a sufficient time, the generator is disconnected and the utility (mains) is reconnected to the load. It also includes appropriate settings timers for establishing stable utility (mains) operation.

Attachment: Holly Hill Lift Station 13 - Addendum 4 (2019-R-38 : Lift Station #13 Rehabilitation)

FUNCTIONS, continued

PROGRAMMABLE LOGIC

The DGC-2020 offers a very powerful, yet easy to use, programmable logic scheme for custom programming of the various inputs, outputs, alarms, and pre-alarms. It allows these elements to be integrated into a complete logic scheme so that the user can meet even the most complex specification. The Programmable Logic control includes the selection of logic gates and timers with drag-and-drop technology to make it fast and simple.

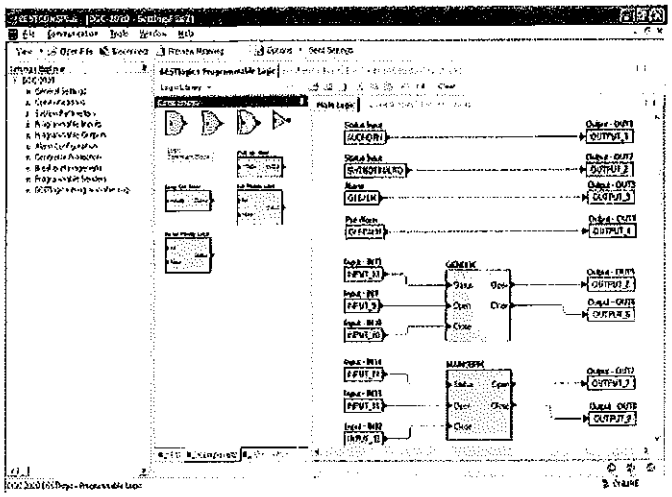

REMOTE DISPLAY PANEL ANNUNCIATION

The DGC-2020 can communicate to a remote display panel, Basler Model RDP-110. This requires only two wires to annunciate all of the alarms and pre-alarms required by NFPA-110 Level I and II.

MODEM (Optional)

One of two optional, dial-out modems (a U.S. version or international version) enables remote control, monitoring, and setting of the DGC-2020. When an alarm or pre-alarm condition occurs, the DGC-2020 can dial up to four telephone numbers, in sequence, until an answer is received and the condition is annunciated.

RS-485 (Modbus) (Optional)

An optional RS-485 communication port uses Modbus communication protocol and enables remote control and monitoring of the DGC-2020 over a polled network.

J1939 COMMUNICATIONS

J1939 CANBUS communications allows the DGC to communicate to the engine's ECU (Engine Control Unit) to gather critical engine information like oil pressure, engine coolant temperature, RPM, battery voltage, and many more. By utilizing the ECU, adding analog engine senders is no longer required. This can save substantial money for the installer. It also eliminates any errors or discrepancies between the ECU data and the data displayed on the DGC that may be present due to analog sender inaccuracies or incompatibility. A total of 47 engine parameters can be obtained via the ECU. You also can derive the added benefit of having access to the ECU's diagnostic troubleshooting codes, or DTCs. The DTCs provide information about the engine's operating conditions and communicates these via J1939, to the DGC, thus eliminating the need for hand-held service tools to diagnose simple engine issues. With the optional modem, the DTCs can be accessed remotely, and valuable service time can be saved by remote diagnostics and taking the right parts to fix the problem the first time.

SPECIFICATIONS

Operating Power

Nominal: 12 or 24 Vdc
Range: 6 to 32 Vdc
Power Consumption:
Sleep Mode: 5W with all relays non-energized
Typical Operational Mode:
14.2W - Run mode, LCD heater on, 6 relays energized
Battery Ride Through:
Withstands cranking ride-through down to 0 V for 50 ms (typical).

Current Sensing	5 Aac Current Sensing	1 Aac Current Sensing
Continuous Rating:	0.1 to 5.0 Aac	0.02 to 1.0 Aac
1 Second Rating:	10 Aac	2 Aac
Burden:	1 VA	1 VA

Voltage Sensing

Range: 12 to 576 V rms, line-to-line
Frequency Range: 10 to 72 Hz for 50/60 style and 10 to 480 Hz for 400 Hz style
Burden: 1 VA
1 Second Rating: 720 V rms

Contact Sensing

Contact sensing inputs include 1 emergency stop input and 16 programmable inputs. The emergency stop input accepts normally closed, dry contacts. All programmable inputs accept normally open, dry contacts.

Engine System Inputs

Fuel Level Sensing Resistance Range:
33 to 240 Ω nominal
Coolant Temperature Sensing Resistance Range:
62.6 to 637.5 Ω nominal
Oil Pressure Sensing Resistance Range:
34 to 240 Ω nominal
Engine Speed Sensing:
Magnetic Pickup
Voltage Range: 3 to 35 V peak (6 to 70 V peak-peak)
Frequency Range: 32 to 10,000 Hz
Generator Voltage
Range: 12 to 576 V rms

Stated accuracies are subject to the accuracy of the senders used.

Attachment: Holly Hill Lift Station 13 - Addendum 4 (2019-R-38 : Lift Station #13 Rehabilitation)

SPECIFICATIONS, continued

Output Contacts
Fuel Solenoid, Engine Crank, Pre-Start Relays Rating:
30 Adc at 28 Vdc-make, break, and carry
Programmable Relays (up to 12) Rating:
2 Adc at 30 Vdc-make, break, and carry

Metering
Generator Voltage (rms)
Metering Range:
0 to 576 Vac (direct measurement)
577 to 9,999 Vac (through VT using VT ratio setting)
Accuracy: ±1.0% of programmed rated voltage or ±2 Vac

Generator Current (rms)
Generator current is measured at the secondary windings of user-supplied 1 A or 5 A CTs.
Metering Range: 0 to 5,000 Aac
CT Primary Range: 1-5,000 Aac,in primary increments of 1 Aac
Accuracy: ±1.0% of programmed rated current or ±2 Aac

Generator Frequency
Metering Range: 10 to 72 Hz (50/60 Hz)
10 to 480 (400 Hz)
Accuracy: ±0.25% or 0.05 Hz

Apparent Power
Indicates total kVA and individual line kVA (4-wire, line-to-neutral or 3-wire, line-to-line).
Accuracy: ±3% or the full-scale indication or ±2 kVA

Power Factor
Metering Range: 0.2 leading to 0.2 lagging
Accuracy: ±0.02

Real Power
Indicates total kW and individual line kW (4-wire, line-to-neutral or 3-wire line-to-line)
Accuracy: ±3% of the full-scale indication or ±2 kW

Oil Pressure
Metering Range: 0 to 145 psi or 0 to 1,000 kPa
Accuracy: ±3% of actual indication or ±2 psi or ±12 kPa (subject to accuracy of sender)

Coolant Temperature
Metering Range: -40 to 410°F or -40 to 210°C
Accuracy: ±3% or actual indication or ±2° (subject to accuracy of sender)

Fuel Level
Metering Range: 0 to 100%
Accuracy: ±2% (subject to accuracy of sender)

Battery Voltage
Metering Range: 6 to 32 Vdc
Accuracy: ±3% of actual indication or ±0.2 Vdc

Engine RPM
Metering Range: 0 to 4,500 rpm
Accuracy: ±2% of actual indication or ±2 rpm

Engine Run Time
Engine run time is retained in nonvolatile memory.
Metering Range: 0 to 99,999 h
Update Interval: 6 min
Accuracy: ±1% of actual indication or ±12 min

Maintenance Timer
Maintenance timer indicates the time remaining until genset service is due. Value is retained in nonvolatile memory.
Metering Range: 0 to 5,000 h
Update Interval: 6 min
Accuracy: ±1% or actual indication or ±12 min

Generator Protection Functions
Overvoltage (59) and Undervoltage (27)
Pickup Range: 70 to 576 Vac
Activation Delay Range: 0 to 30 s

Underfrequency (81U) and Overfrequency (81O)
Pickup Range: 45 to 66 Hz (50/60 Hz nominal)
360 to 440 Hz (400 Hz nominal)
Pickup Increment: 0.1 Hz (50/60 Hz nominal)
0.1 Hz (400 Hz nominal)
Activation Delay Range: 0 to 30 s

Overcurrent (51) (Optional)
Pickup Range: 0.18 to 1.18 Aac (1 A current sensing)
0.9 to 7.75 Aac (5 A current sensing)
Time Dial Range: 0 to 30 s (fixed time curve)
0 to 9.9 (inverse curve time multiplier)
Inverse Time Curves:
17 selectable Time Overcurrent Characteristic Curves

Phase Imbalance (47) (Optional)
Pickup Range: 5 to 100 Vac
Pickup Increment: 1 Vac
Activation Delay Range: 0 to 30 s
Activation Delay Increment: 0.1 s

Environmental
Temperature
Operating: -40 to 70°C (-40 to 158°F)*
Storage: -40 to 85°C (-40 to 185°F)
Humidity: IEC 68-2-38
Salt Fog: ASTM B 17-73, IEC 68-2-11 (tested while operational)
Ingress Protection: IEC IP54 for front panel
Shock: 15 G in 3 perpendicular planes
Vibration: 5 to 29 to 5 Hz: 1.5 G peak for 5 min.
29 to 52 to 29 Hz: 0.036" DECS-A for 2.5 min.
52 to 500 to 52 Hz: 5 G peak for 7.5 min.
Swept over the following ranges for 12 sweeps in each of three mutually perpendicular planes with each 15-minute sweep.

* Display operation is maintained at -40°C when used with an optional LCD heater. Refer to DGC-2020 Style Chart for ordering information. Display operation is maintained at -20°C when the optional LCD heater is not used.

HALT (Highly Accelerated Life Testing)
Halt Testing is a method used by manufacturers concerned about high quality to prove that their products will provide the user with many years of reliable service. Halt testing subjects the device to extremes in temperature, shock, and vibration to simulate years of operation, but in a much shorter time span. Halt testing allows Basler to evaluate all possible design elements that will add to an increase in the life of this device. As an example of some of the extreme testing conditions, the DGC-2020 was subjected to Temperature Tests (tested over a temperature range of -100°C to +115°C), Vibration Tests (swept over a frequency of 5 to 50G at +20°C), and Temperature/Vibration Tests (tested at 40G

Attachment: Holly Hill Lift Station 13 - Addendum 4 (2019-R-38 : Lift Station #13 Rehabilitation)

SPECIFICATIONS, continued

over a temperature range of -80°C to +90°C). Please note that the vibration and temperature extremes noted here are specific to HALT testing and do not reflect recommended operation level.

Agency Approvals

UL/CSA Approvals

"cURus" approved to UL 508 R and CSA C22.2 No.14

NFPA Compliance

Complies with NFPA Standard 110, Standard for Emergency and Standby Power.

CE Compliance

This product complies with the requirements of the following EC Directives:

- Low Voltage Directive (LVD) - 73/23/EEC as amended by 93/68/EEC
- Electromagnetic Compatibility (EMC) - 89/336/EEC as amended by 92/31/EEC and 93/68/EEC
- EN 50178:1997 - Electronic Equipment for use in Power Installations
- EN 61000-6-4:2001 - Electromagnetic Compatibility (EMC), Generic Standards, Emission Standard for Industrial Environments
- EN 61000-6-2:2001 - Electromagnetic Compatibility (EMC), Generic Standards, Immunity for Industrial Environments

Physical

Weight: 2 kg (4.4 lb)

DGC-2020 FRONT PANEL DISPLAY

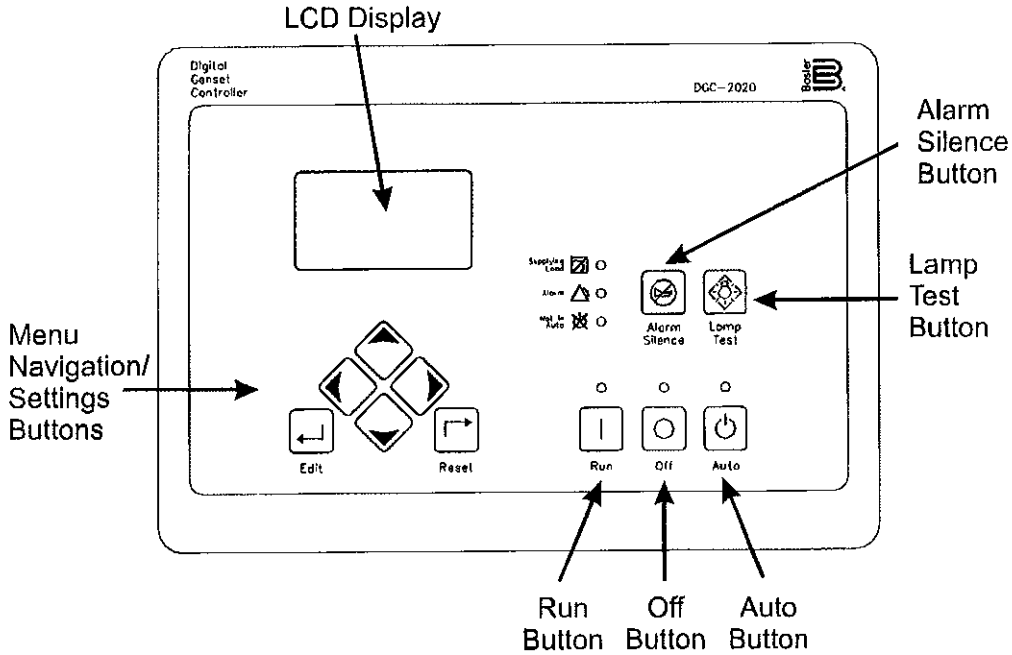

Figure 1 - Front Panel HMI (Human Machine Interface)

FRONT PANEL LED INDICATORS

Run:	Green - Indicates the DGC is in the RUN mode.
Off:	Red - Indicates the DC is in the OFF mode.
Auto:	Green - Indicates the unit is in the AUTO mode of operation.
Supplying Load:	Green - Indicates the system is supplying current to a connected load.
Alarm:	Red - Indicates an alarm situation by continuous illumination. Indicates a Pre-alarm by flashing.
Not in Auto:	Red - Indicates unit is not in the AUTO mode.

PACKAGING

DGC-2020 offers a complete system of environmental hardening. Its design utilizes advanced engineering and design techniques to allow it to operate in the harshest environments. The DGC-2020 uses encapsulated construction that has been successfully proven on hundreds of thousands of voltage regulators built by Basler. We have included an integrated gasket to seal the front panel to an IP54 rating, and we included a protective cover on the rear of the DGC-2020.

Attachment: Holly Hill Lift Station 13 - Addendum 4 (2019-R-38 : Lift Station #13 Rehabilitation)

DIMENSIONS

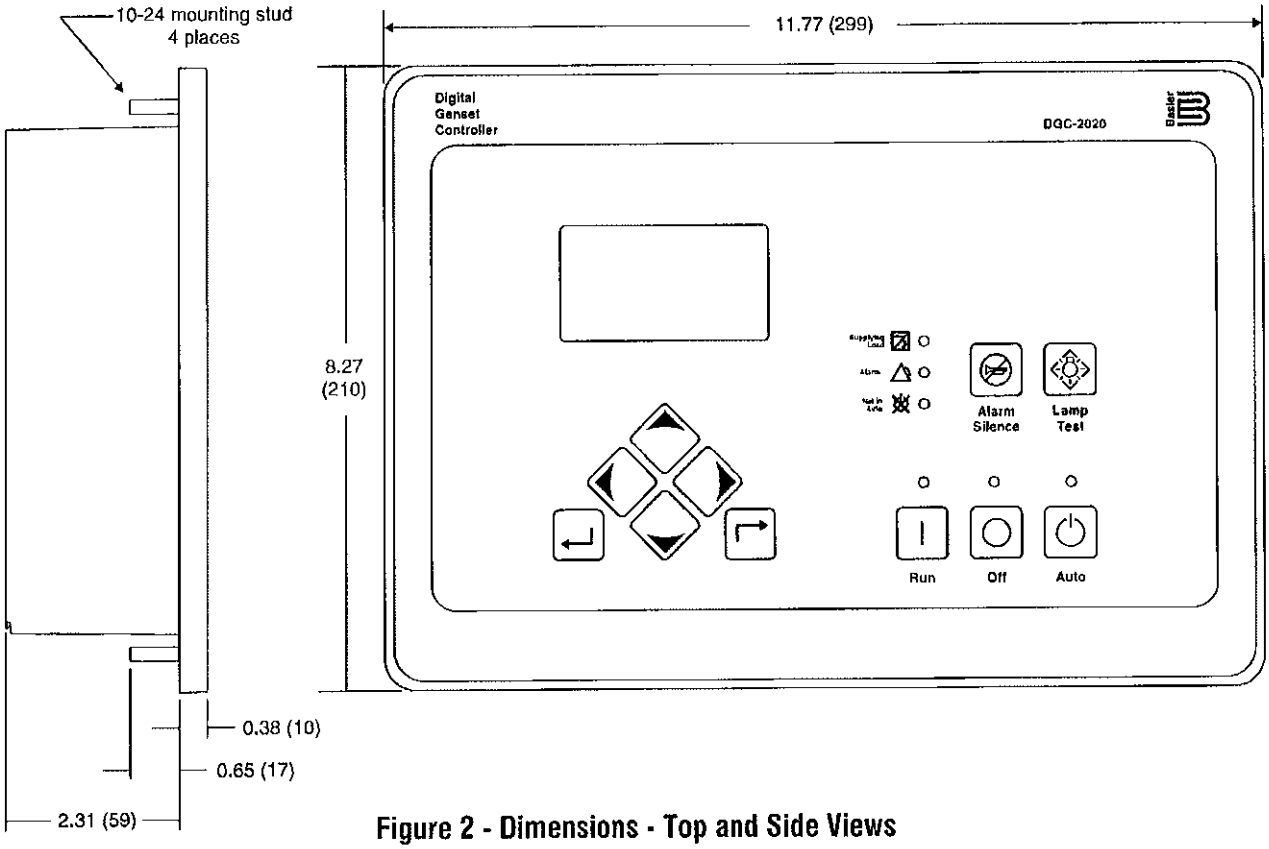

Figure 2 - Dimensions - Top and Side Views

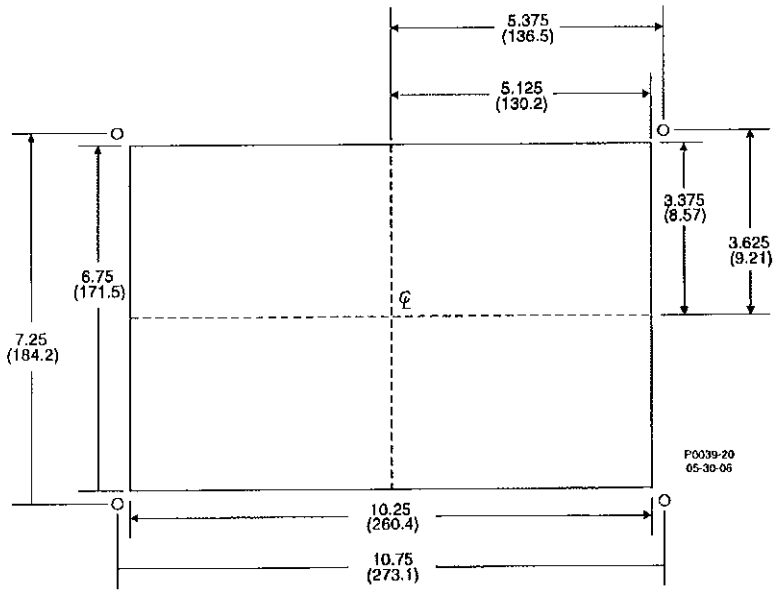

Figure 3 - Panel Cutting and Drilling Dimensions

NOTES: 1. Dimensions in parentheses are in millimeters.
2. All drawings and data subject to change without notice.

Attachment: Holly Hill Lift Station 13 - Addendum 4 (2019-R-38 : Lift Station #13 Rehabilitation)

CONNECTIONS

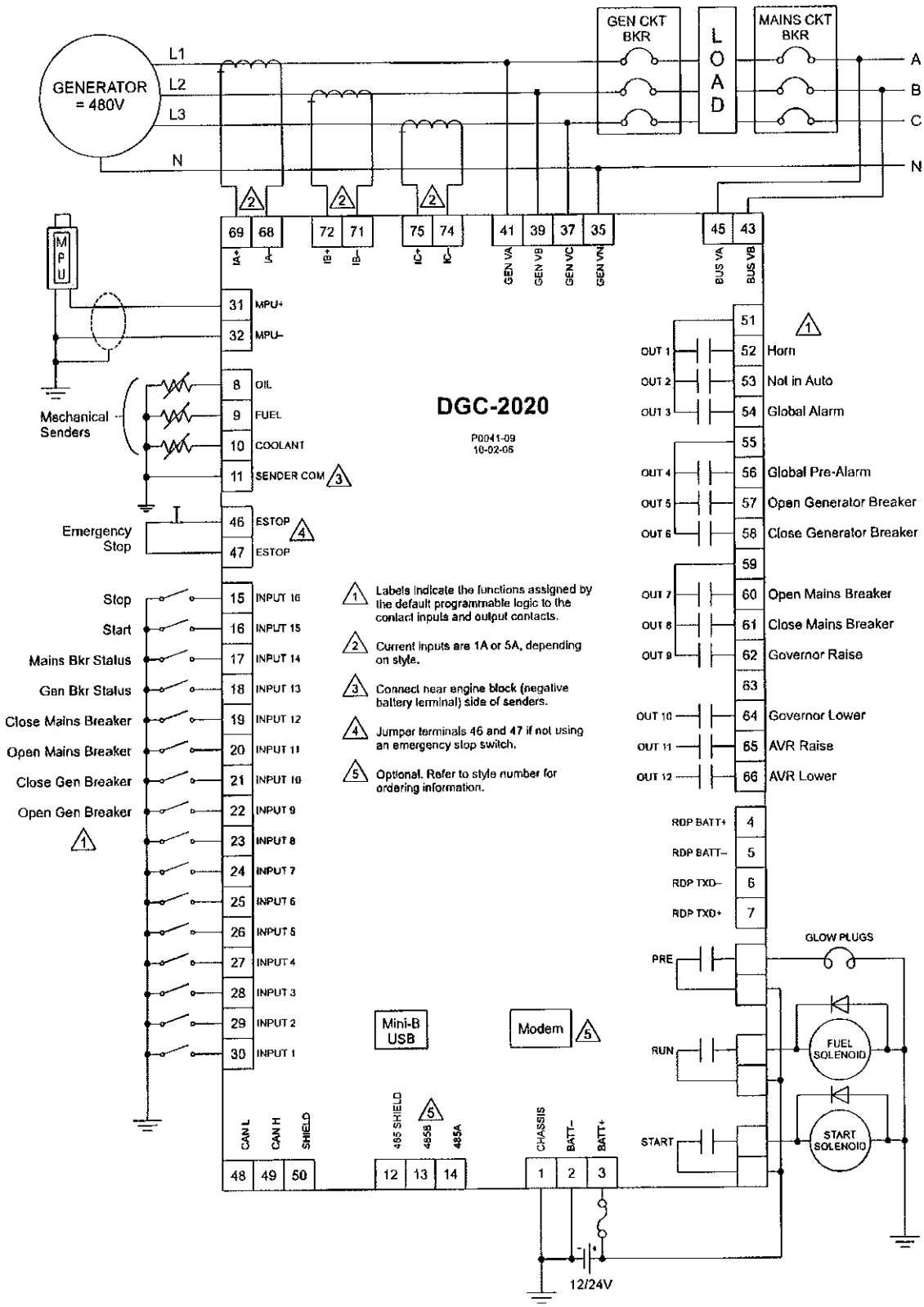

Figure 4 - DGC-2020 Typical Connections

Attachment: Holly Hill Lift Station 13 - Addendum 4 (2019-R-38 : Lift Station #13 Rehabilitation)

ORDERING INFORMATION

OPTIONAL FEATURES

The DGC-2020 has been designed to provide maximum functionality at a minimum price. You only need to buy what you need. We have selected options to help maximize the value provided by the DGC-2020.

Additional Contact Outputs

For those applications where more output contacts are needed, the DGC-2020 can be adapted to include 8 additional 2 Adc rated dry contact outputs. These are real contacts and not the solid-state type that require additional external circuitry to properly operate. These contacts are fully programmable via the easy-to-use BESTCOMSPlus PC software and can be assigned for numerous user-defined functions.

RS-485 Communications

When the RS-485 option is selected, the user can send and receive information from the DGC-2020 via the RS-485 communications port and Modbus protocol. This feature allows the DGC-2020 controlled genset to be fully integrated into the building management system. Please see the Instruction Manual for the Modbus register list.

Battery Backup for Real Time Clock

A ten-year (typical life) lithium battery is used to provide long-term maintenance of the real time clock setting. This battery is serviceable by removing the rear cover. Please note that the settings, programming, and event records are saved in non-volatile memory and do not require battery backup.

Internal Modem

The DGC-2020 can provide long distance communications by including an internal modem. There are two modems available, one for U.S. and one for European telephone systems. When a modem is selected, the user can access the DGC-2020 from virtually anywhere via a telephone line. The user can control and monitor the genset as if standing right next to it. The DGC-2020 can also dial out for pre-programmed circumstances to alert the user of selected conditions.

Enhanced Generator Protection

In addition to the standard generator protection (27, 59, 81O, 81U), the DGC-2020 also can be equipped with a more sophisticated generator protection system. This option provides an overcurrent element (51) with 17 selectable time current characteristic curves and a voltage phase balance protection function (47).

Auto-Synchronizer

When the DGC-2020 is configured with this option, the user can select between two types of autosynchronizer, phase lock or anticipatory style. In both methods, the DGC-2020 adjusts generator frequency and voltage to match that of the bus (mains) via contact outputs, then connects the generator to the bus by closing the connecting breaker.

LCD Heater

The standard DGC-2020 is fully functional down to -40°C; however, the LCD display is only viewable down to -20°C. An LCD heater is available to allow the LCD to be fully usable for operations down to -40°C.

STYLE CHART

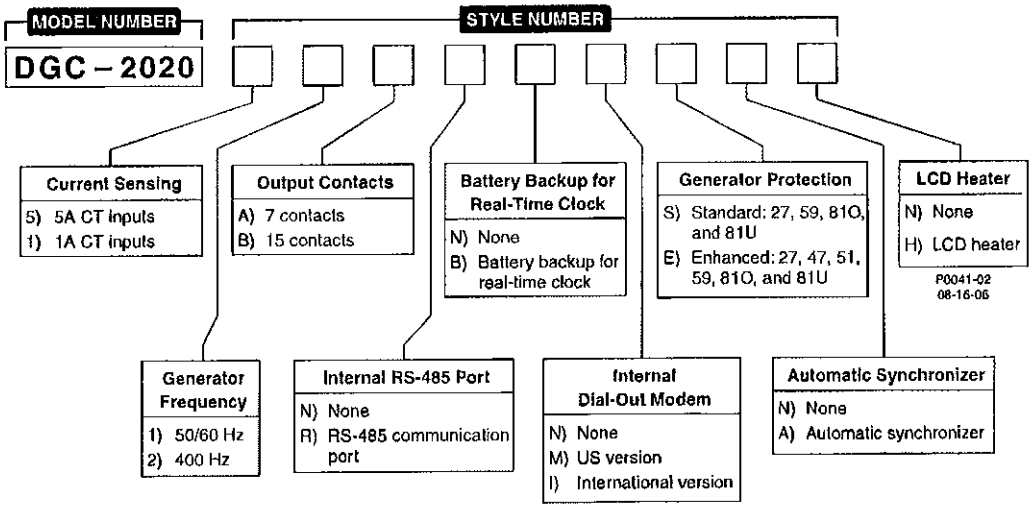

Basler Electric

P.A.E. Les Pins, 67319 Wasselonne Cedex FRANCE
Tel +33 3.88.87.1010 Fax +33 3.88.87.0808
e-mail: beifrance@basler.com

Route 143, Box 269, Highland, Illinois U.S.A. 62249 No. 1300 North Zhongshan Road, Wujiang Economic Development Zone
Tel +1 618.654.2341 Fax +1 618.654.2351
e-mail: info@basler.com

Suzhou, Jiangsu Province - P.R. China 215200
Tel +86(0)512 6346 1730 Fax +86(0)512 6346 1760
e-mail: beichina@basler.com

www.basler.com

Printed in U.S.A.

Attachment: Holly Hill Lift Station 13 - Addendum 4 (2019-R-38 : Lift Station #13 Rehabilitation)

MARATHON ELECTRIC GENERATORS

DVR®2000E+

Digital Voltage Regulator

Advanced Features

CAN Bus Communication
Allows for the integration of the DVR®2000E+ as a node on a CAN Network for the purpose of controlling or monitoring regulator performance.

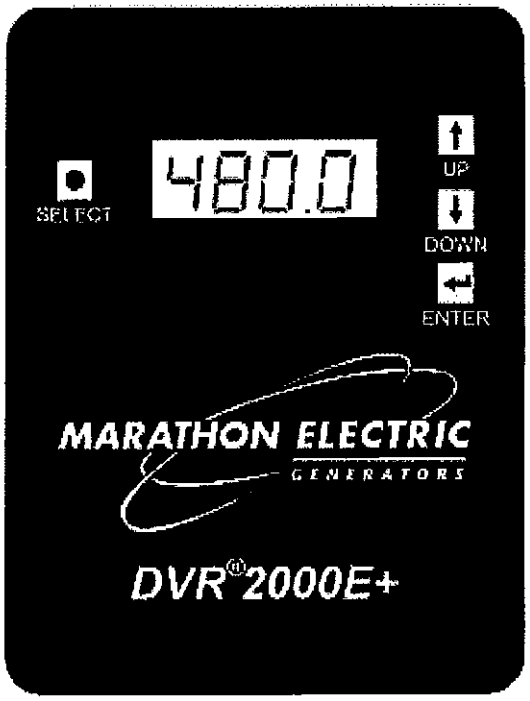

True RMS Single and Three Phase Voltage Sensing
Connect in the sensing mode you prefer. Sense 100 to 600 Volts ±10% at 50 or 60 Hz.

True Three Phase Power Monitoring
Additional CT inputs enable you to sense current on all three phases.

Generator Soft Start
Controlled increase to rated voltage limits overshoot during voltage build-up in AVR regulation modes.

Frame Specific PID Selection
Tuning your regulator for your Marathon Electric generator has never been easier. Simply select the appropriate frame size and your gains are set.

Four Digit HMI Display
Whether you are changing settings or monitoring regulator status, this display provides a more intuitive feedback.

Expandable Platform
Paves the way for adding features like shunt power capability and RTD monitoring through expansion modules.

Attachment: Holly Hill Lift Station 13 - Addendum 4 (2019-R-38 : Lift Station #13 Rehabilitation)

DVR®2000E+ Specifications

Voltage Regulation – 0.25% over load range at rated power factor and constant generator frequency.

Output Power – 75 Vdc, 3.0 Adc continuous rating and 150 Vdc, 7.5 Adc forcing capability for one minute.

Exciter Field DC Resistance – 18 to 25Ω range

Voltage Adjustment – Minimum if ±10% of nominal voltage range. Remote adjustment can be made up to 150 feet from voltage regulator.

Input Power – 180 to 240 Vac, 250 to 300 Hz PMG power supply

Operating Temperature – From -40℃ to +70℃ (-40℉ to +158℉)

Storage Temperature – From -40℃ to +85℃ (-40℉ to +185℉)

Ingress Protection – IP52 (front side mounted in conduit box); IP10 (rear side with protective cover)

Shock – 20 Gs in 3 perpendicular planes

Vibration – 1 G at 5 to 26 Hz; 0.050" double amplitude (27 to 52 Hz); 7 Gs at 53 to 500 Hz

Weight – 3 lb. (1361 g)

Humidity Testing – Per MIL-STD-705B, Method 711-D

Salt Fog Testing – Per MIL-STD-810E

CAN Protocol – SAE J1939

Regulator Sensing – 100 to 600 Vac, 50/60 Hz, 1-phase/3-phase

EMI Compatibility

Immunity

Meets EN 61000-6-2: 2005 Electromagnetic compatibility (EMC) – Part 6-2: Generic standards – Immunity for industrial environments.

Emission

Meets EN 61000-6-4: 2007 Electromagnetic compatibility (EMC) – Part 6-4: Generic standards – Emission standard for industrial environments

EMI Compatibility Tests

Immunity

Electrostatic Discharge (ESD):

IEC 61000-4-2

Radiated RF: IEC 61000-4-3

Electrical Fast Transient (EFT) / Burst:

IEC 61000-4-4

Conducted RF: IEC 61000-4-6

Power Frequency and Magnetic Field: IEC 61000-4-8

Emmision

Radiated RF: EN 61000-6-4: 2007, 30 MHz to 1000 MHz

This regulator meets MIL-STD-431C, Part 9 for radiated and conducted emissions and radiated susceptibility when mounted in the generator conduit box.

MARATHON ELECTRIC GENERATORS

Marathon Electric Manufacturing Corp.
P.O. Box 8003
Wausau WI 54402-8003 USA
www.marathonelectric.com
Phone: 715-675-3359
Fax: 715-675-8026

GPN045 23-June-2011
Printed in the USA

Attachment: Holly Hill Lift Station 13 - Addendum 4 (2019-R-38 : Lift Station #13 Rehabilitation)

Davidson Sales Co. **Model Series DSC 870 • 100 - 600 AMP**

316 STAINLESS STEEL AUTOMATIC TRANSFER SWITCHES

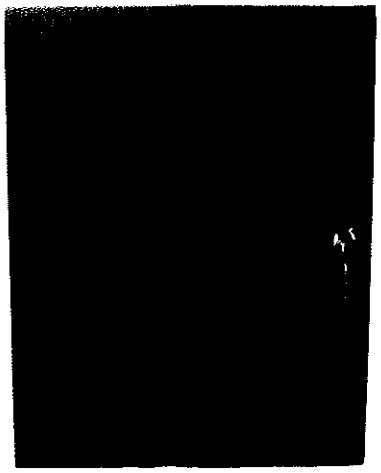

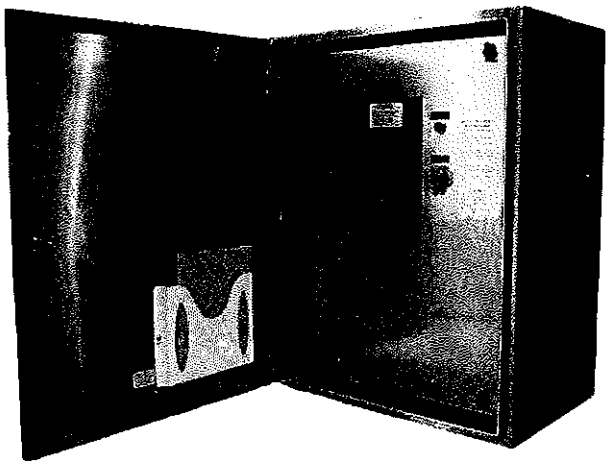

DSC 870 AUTOMATIC TRANSFER SWITCHES
OFFER THE FOLLOWING FEATURES:

Thomson Technology Transfer Switches

Nema 4X 316 Stainless Steel Double Door Wall Mount Enclosure

Enclosed Contact Power Switching Units

Reliable Motor-Operated Transfer Mechanism

Safety Standards

- UL 1008 Automatic Transfer Switches for use In Emergency Systems
- CSA C22.2 No. 178 Automatic Transfer Switches

Superior Serviceability

Control Features

- **TSC 80e** microprocessor based controller with integral front faceplate mounted LCD display.

Product Data

- Available 2, 3 or 4 pole (except 200 amp)
- All models 50/60Hz rated
- Voltage range 208-600 (200 amp - max 240 volts)
- 3 phase, 3 or 4 wire systems

GENERAL DESCRIPTION

DSC TS 870 Standard Automatic Transfer Switches employ two mechanically interlocked power switching units with a microprocessor based controller to automatically start a generator and transfer system load to a generator supply in the event of a utility supply failure. All load transfer sequences are "Open Transition" (i.e. "break-before make") with adjustable neutral position delay to ensure adequate voltage decay to prevent out of phase transfers.

All **DSC 870** transfer switch models have been 3 cycle withstand current tested in accordance with UL 1008 & CSA 178 which allow high current ratings and use of non-series rated upstream protective devices.
The standard **DSC 870** Automatic Transfer Switch is rated for 100% system load and requires upstream over current protection. The DSC **870** design allows optional use of integral over current trip elements within the power switching units thus eliminating the need for external, upstream over current protection.

All DSC 870 series transfer switches use a type **TSC 80e** microprocessor based controller as standard. All necessary control functions for fully automatic operation are provided by the **TSC 80e** transfer controller.

Attachment: Holly Hill Lift Station 13 - Addendum 4 (2019-R-38 : Lift Station #13 Rehabilitation)

SERVICE ENTRANCE ATS

DSC 870 Service Entrance Automatic Transfer Switches incorporate an isolating mechanism and over current protection on the utility supply thereby removing the need to have a separate, upstream circuit breaker/disconnect switch from the transfer switch. This unique **Service Entrance Rated Automatic Transfer Switch** design is incorporated into a standard sized automatic transfer switch enclosure providing a space saving, cost effective solution for most applications.

Standard features of the **Service Entrance Rated Automatic Transfer Switch** include a pad-lockable Service Disconnect control switch and status indications.

DSC 870 SE Service disconnect operation is very simple and ensures a high level of safety for system maintenance personnel. The **DSC 870 SE** Automatic Transfer Switch is rated for the system load and requires upstream over current protection on the generator supply. Optional over current trip on generator side is available.

ENCLOSURE DIMENSIONS/CABLE TERMINALS

BASIC MODEL	NUMBER OF POLES	DIMENSIONS Inches (mm)			SHIPPING WEIGHT	TERMINAL RATING	
		HEIGHT	WIDTH	DEPTH	LBS (KG)	QTY PER PHASE	RANGE
100A	2,3,4	38	30	19	215	1	# 14 - 1/0
150A	2,3,4	38	30	19	215	1	# 2 - 4/0
200A	2,3	38	30	19	215	1	# 6 - 350 mcm
250A	2,3,4	38	30	19	225	1	# 6 - 350 mcm
400A	2,3,4	47	37	20	275	2	2/0 - 500 mcm
600A	2,3,4	47	37	20	300	2	2/0 - 500 mcm

STANDARD FEATURES

- Thomson Technology TS 870 Series Automatic Transfer Switch
- TSC 80e microprocessor controller
- Nema 4X 316 stainless steel double door wall mount enclosure
- Padlockable 3 point stainless steel latching handle
- Removable outer and inner doors
- Aluminum inner door
- Document holder
- Stainless steel or corrosive resistant hardware
- Automatic stainless steel door stop
- Standard lead time is 2.5 - 3 weeks

ORDERING INFORMATION AND WITHSTAND CURRENT RATINGS

Contact Davidson Sales Co. for ordering information and withstand current ratings.

DavidsonSales CO

www.davidsonsales.com www.davidsonsalesshop.com
839 Bill France Blvd., Daytona Beach, FL 32117
Phone (386)274-2079 Phone (800)383-2078
Fax (386)274-2279 Fax (800)475-2279

Attachment: Holly Hill Lift Station 13 - Addendum 4 (2019-R-38 : Lift Station #13 Rehabilitation)

THOMSON TECHNOLOGY
POWER & CONTROL

09 • 10 • 30

Model Series TS 870 • 100 - 1200 AMP

AUTOMATIC TRANSFER SWITCHES

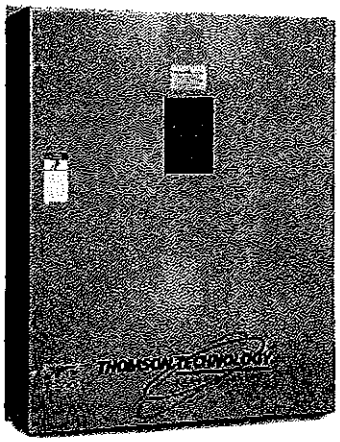

TS 870 - 400 AMP
TRANSFER SWITCH

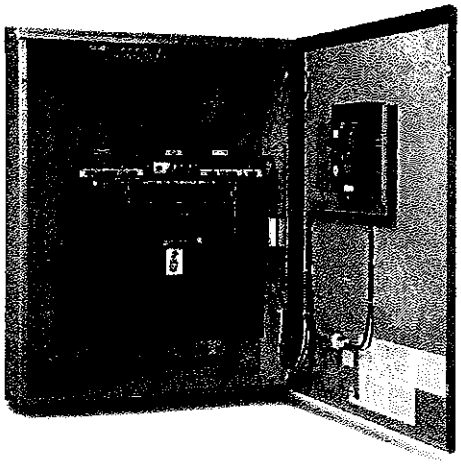

TS 870 - 400 AMP
TRANSFER SWITCH

THOMSON TECHNOLOGY TS 870 AUTOMATIC TRANSFER SWITCHES OFFER THE FOLLOWING OUTSTANDING FEATURES:

Enclosed Contact Power Switching Units

- **fully enclosed** silver alloy contacts provide **high withstand** rating & **100% continuous** current rating.
- **3 cycle short circuit current withstand** tested allows use of non-series rated upstream protection devices.
- **completely separate** utility and generator side power switching units provide superior reliability through redundancy (no common parts), as well as excellent serviceability.
- power switching units can incorporate **over current protection,** allowing cost savings in upstream devices.
- **not damaged if manually switched** while in service since contacts have inherent spring over center design.

Reliable Motor-Operated Transfer Mechanism

- **heavy duty** brushless gearmotor and operating mechanism provide mechanical interlocking and extreme long life with minimal maintenance.
- **safe manual operation** permits easy operation even under adverse conditions.

Superior Serviceability

- all mechanical and control devices are **visible and readily accessible.**
- all control wires and power busses are **front-accessible.**

Control Features

- **TSC 80e** microprocessor based controller with integral front faceplate mounted LCD display for superior monitoring operator interface.
- **isolation plug** permits disconnecting control circuits from all power sources for safety and convenience.

Quality Assurance

- ISO 9001 Registered

Product Data

- Models from 100-1200 Amp continuous
- Available 2, 3 or 4 pole
- All models 50/60Hz rated
- Voltage range 208-600
- 3 phase, 3 or 4 wire systems

Seismic Certification: TS 870 ATS is certified for installation and operation per the following requirements:

- IBC 2006 – Section 13, Occupancy Category IV
- ASCE7-05 Region 3 (minimum S_s=342%)

Safety Standards

- UL 1008 Automatic Transfer Switches for use in Emergency Systems
- CSA C22.2 No. 178 Automatic Transfer Switches

THOMSON TECHNOLOGY
ISO 9001

THOMSON TECHNOLOGY • 9087A - 198th STREET, LANGLEY, BC CANADA V1M 3B1

TELEPHONE: (604) 888-0110 • FAX: (604) 888-3381 • E-MAIL: info@thomsontechnology.com • www.thomsontechnology.com

Attachment: Holly Hill Lift Station 13 - Addendum 4 (2019-R-38 : Lift Station #13 Rehabilitation)

GENERAL DESCRIPTION

STANDARD ATS

Thomson Technology TS 870 Standard Automatic Transfer Switches employ two mechanically interlocked power switching units with a microprocessor based controller to automatically start a generator and transfer system load to a generator supply in the event of a utility supply failure. System load is then automatically retransferred back to the utility supply following restoration of the utility power source to within normal operating limits. All load transfer sequences are "Open Transition" (i.e. "break-before make") with adjustable neutral position delay to ensure adequate voltage decay to prevent out of phase transfers.

TS 870 Automatic Transfer Switches are specifically designed and certified to CSA 178 & UL 1008 Standards for use in Emergency Power System applications such as commercial, industrial, or government institutions that require automatic standby power.

All **TS 870** transfer switch models have been 3 cycle withstand current tested in accordance with UL 1008 & CSA 178 which allow high current ratings and use of non-series rated upstream protective devices.

The standard **TS 870** Automatic Transfer Switch is rated for 100% system load and requires upstream over current protection. The TS **870** design allows optional use of integral over current trip elements within the power switching units thus eliminating the need for external, upstream over current protection.

All TS 870 series transfer switches use a type **TSC 80e** microprocessor based controller as standard. All necessary control functions for fully automatic operation are provided by the **TSC 80e** transfer controller. The **TSC 80e** controller is mounted on the door of the transfer switch enclosure and operating status is shown via faceplate mounted LCD display and LED lights.

Thomson TS 870 Series ATS are also available in a Manually Initiated configuration without the **TSC 80e** controller but providing Source Availability and Position indication lights with a Source 1/Source 2 selector switch. Transfer switches with this option or options that inhibit the automatic transfer to the emergency source are labeled "non-automatic" in accordance with UL 1008 and CSA C22.2 No. 178 requirements.

SERVICE ENTRANCE ATS

Thomson Technology TS 870 Service Entrance Automatic Transfer Switches incorporate an isolating mechanism and over current protection on the utility supply thereby removing the need to have a separate, upstream circuit breaker/ disconnect switch from the transfer switch. This unique **Service Entrance Rated Automatic Transfer Switch** design is incorporated into a standard sized automatic transfer switch enclosure providing a space saving, cost effective solution for most applications.

The **Service Entrance Rated ATS** feature is a standard option that can be applied to any **TS 870** model of Thomson Technology Transfer Switch.

Standard features of the **Service Entrance Rated Automatic Transfer Switch** include a NEMA 1 rated enclosure, pad-lockable Service Disconnect control switch and status indications.

TS 870 SE Service disconnect operation is very simple and ensures a high level of safety for system maintenance personnel. Normal operation and performance of the automatic transfer switch is unaffected by the Service Entrance ATS feature. The **TS 870 SE** Automatic Transfer Switch is rated for the system load and requires upstream over current protection on the generator supply.

The **TS 870 SE** series transfer switches use a type **TSC 80e** microprocessor based controller.

WITHSTAND CURRENT RATINGS (ALL MODELS)

BASIC MODEL	MAXIMUM VOLTAGE	RATED CURRENT (AMPS)	WITHSTAND CURRENT RATING AMPS (RMS)[1]				
			With Upstream Circuit Breaker Protection			With Upstream Fuse Protection	
			@240V	@480V	@600V	@ up to 600V	FUSE TYPE
TS 87xA - 0100	600	100	65,000	25,000	18,000	100,000	T,J
TS 87xA - 0150	600	150	65,000	25,000	18,000	100,000	T,J
TS 87xA - 0200	240	200	65,000	N/A	N/A	N/A	T,J
TS 87xA - 0250	600	250	65,000	35,000	25,000	100,000	T,J
TS 87xA - 0400	600	400	65,000	50,000	35,000	100,000	T,J
TS 87xA - 0600	600	600	65,000	50,000	35,000	100,000	T,J
TS 87xA - 0800	600	800	65,000	50,000	35,000	100,000	Consult Factory
TS 87xA - 1000	600	1000	65,000	50,000	42,000	100,000	Consult Factory
TS 87xA - 1200	600	1200	65,000	50,000	42,000	100,000	Consult Factory

[1] Note: For power switching devices equipped with optional overcurrent trip units, standard interrupting ratings are identical to withstand ratings shown at 240V and 480V. For interrupting ratings at 600V, contact Thomson Technology.

THOMSON TECHNOLOGY • 9087A - 198th STREET, LANGLEY, BC CANADA V1M 3B1

TELEPHONE: (604) 888-0110 • FAX: (604) 888-3381 • E-MAIL: info@thomsontechnology.com • www.thomsontechnology.com

Attachment: Holly Hill Lift Station 13 - Addendum 4 (2019-R-38 : Lift Station #13 Rehabilitation)

ENCLOSURE DIMENSIONS/CABLE TERMINALS

(NEMA 1, ASA 61 GRAY)

BASIC MODEL	NUMBER OF POLES	DIMENSIONS Inches (mm) [1]			SHIPPING WEIGHT	TERMINAL RATING [3]	
		HEIGHT	WIDTH	DEPTH	lbs (KG)	QTY PER PHASE	RANGE [4]
100A	2,3,4	31.1 (790)	22.3 (566)	14.0 (356)	143 (65)	1	#14 - 1/0
150A	2,3,4	31.1 (790)	22.3 (566)	14.0 (356)	143 (65)	1	#2 - 4/0
200A	2,3,4	31.1 (790)	22.3 (566)	14.0 (356)	143 (65)	1	#6 – 350 MCM
250A	2,3,4	35.1 (892)	27.3 (693)	14.0 (356)	172 (78)	1	#6 – 350 MCM
400A	2,3	43.1 (1095)	34.3 (871)	13.0 (330)	227 (103)	2	2/0 – 500 MCM
400A	4	48.1 (1222)	37.8 (960)	14.5 (368)	256 (116)	2	2/0 – 500 MCM
600A	2,3	46.1 (1171)	36.3 (922)	14.5 (368)	248 (113)	2	2/0 – 500 MCM
600A	4	48.1 (1222)	37.8 (960)	14.5 (368)	256 (116)	2	2/0 – 500 MCM
800A	2,3	48.1 (1222)	37.8 (960)	14.5 (368)	309 (140.4)	3	2/0 – 500 MCM
800A	4	63.1 (1603)	40.8 (1036)	14.5 (368)	367 (167)	3	2/0 – 500 MCM
1000A/1200A	2,3,4	76.0 (1930)	34.3 (871)	14.0 (356)	550 (249)	4	4/0 – 500 MCM

Optional NEMA 3R & 4X class enclosures available — consult Thomson Technology.
For ATS with Distribution Breaker Option contact factory for dimensions.

[1] Enclosure dimensions are for reference. (DO NOT USE FOR CONSTRUCTION)
[3] All cable connections suitable for copper or aluminum
[4] Optional terminal ratings are available in some models – Consult Thomson Technology

STANDARD FEATURES

(With TSC 80e Controller)

- LCD Display for monitoring 3 Phase Utility/Generator voltage, system frequency and timer countdown operation
- Front Panel Programming using built-in faceplate mounted pushbuttons & LCD display with password security
- Load on Utility & Load on Generator Lights
- Utility & Generator Source Available Lights
- 3 Phase Voltage sensing on Utility & Generator Sources
- Generator AC frequency sensing
- Utility under voltage control setpoint 70 - 95% (adjustable)
- Generator under voltage control setpoint 70 - 95% (adjustable)
- Generator under frequency control setpoint 70 - 90% (adjustable)
- Engine warm-up timer 0-60 sec. (adjustable)
- Utility return timer 0-30 min. (adjustable)
- Engine start timer 0-60 sec. (adjustable)
- Engine cooldown timer 0-30 min. (adjustable)
- Neutral position delay timer 0-60 sec. (adjustable)
- Load Disconnect Contact (LDC) for pre/post transfer control to signal external building systems such as elevators during transfer operations
- Programmable Generator Exercise Timer (EXT) with easy to use 4 event, 7-14-21-28 Day, On-load or Off-load Programmability
- Real-time clock c/w battery back-up & daylight-savings programming
- Data logging including total transfers to generator, total utility power failures, load on utility hours, load on generator hours and utility or generator voltage/ frequency data at time of fault
- Five user Programmable Output Contacts pre-wired to customer terminal blocks rated 10A, 120/240V resistive, Form C. Each output contact is user programmable to 10 different functions including: Load on Utility, Load on Gen, Load Disconnect Contact

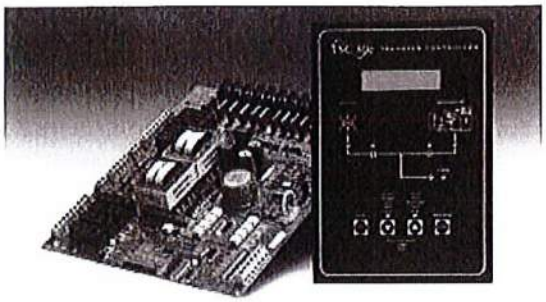

(LDC), Fail to Transfer (FTT), Utility Power Available (UPA), Generator Power Available (GPA), Utility Power Fail, Engine start, ATS Not in Auto, and ATS in Auto. The Transfer Switch is pre-programmed with the following outputs enabled:
  - Load on Utility
  - Load on Gen
  - Load Disconnect Contact (LDC)
  - Fail to Transfer (FTT)
  - ATS Not in Auto
- Local utility power fail simulation test pushbutton & LED, door mounted
- Remote utility power fail simulation test pushbutton input (via terminal block)
- Local plant exercise initiate pushbutton & LED, door mounted
- Engine start contact (10A, 120/240VAC resistive max.)
- Transfer fail/forced transfer logic
- Automatic force transfer to alternate supply should load voltage become de-energized
- 50 or 60Hz capable (115V control power)
- Remote Load Test/Peak Shave Input
- NEMA 1 Enclosure
- Solid Neutral on 4 wire Systems

THOMSON TECHNOLOGY • 9087A - 198th STREET, LANGLEY, BC CANADA V1M 3B1

TELEPHONE: (604) 888-0110 • FAX: (604) 888-3381 • E-MAIL: info@thomsontechnology.com • www.thomsontechnology.com

Attachment: Holly Hill Lift Station 13 - Addendum 4 (2019-R-38 : Lift Station #13 Rehabilitation)

ORDERING INFORMATION

When placing an order, specify the following 21 digit ATS MODEL CODE as per the features and applications described below.

1	2	4	5	6	7	8	9	10	11	12	13	14	15	16	17	18	19	20	21
T	S	8	7																

1-3. SERIES
TS - TRANSFER SWITCH

4 & 5. MODEL
87 - 870 SWITCH

6. POLES
2 - 2 POLE
3 - 3 POLE
4 - 4 POLE

7. CONFIGURATION TYPE
A - ATS
X - SPECIAL

8 - 11. AMPERAGE
0100
0150
0200
0250
0400
0600
0800
1000
1200

12. APPLICATION
A - STANDARD
B - SERVICE ENTRANCE
X - SPECIAL

13. OPERATION
1 - OPEN TRANSITION
2 - MANUAL ELEC. OP.
X - SPECIAL

14 . SAFETY STANDARDS
A - UL 1008
B - CSA C22.2 NO 178
X - NOT APPLICABLE

15 . VOLTAGE
1Ø 3 WIRE
D - 120/240
3Ø 4 WIRE (GROUNDED NEUTRAL)
E - 120/208 [1]
F - 127/220
G - 120240 [1] (DELTA)
H - 220/380 [2]
S - 230/400 [2]
J - 240/416
K - 254/440
M - 277/480 [1]
N - 347/600 [1]
Y - MULTIVOLTAGE
(STOCK SWITCHES ONLY) [1]
Customer to specify voltage when ordering
3Ø 3 WIRE
P - 208
Q - 220
R - 240
U - 416
V - 480
W - 600
X - SPECIAL

16. CONTROLLER
3 - TSC 80e
7 - NONE (MANUAL)

17. ENCLOSURE TYPE
A - NEMA1, ASA #61 GREY
B - NEMA2, ASA #61 GREY
C - NEMA12, ASA #61 GREY
D - NEMA3R SD, ASA #61 GREY
E - NEMA3R DD, ASA #61 GREY
F - NEMA3RX/4X DD
(304 STAINLESS STEEL) [3]
G - NONE (OPEN STYLE)
H - NEMA 3RXDD (ALUMINUM)
ASA #61 GREY [4]
X - SPECIAL

18. UTILITY SWITCHING DEVICE
K - MOLDED CASE SWITCH
(100 - 1200 A)
M- MOLDED CASE SWITCH C/W
THER-MAG TRIP (100-200A)
N - MOLDED CASE SWITCH C/W
ELECTRONIC TRIP (250-1200A)
P - MOLDED CASE SWITCH C/W
ELECTRONIC & GF TRIP (250-1200A)

19. GENERATOR SWITCHING DEVICE
K - MOLDED CASE SWITCH
(100 - 1200 A)
M - MOLDED CASE SWITCH C/W
THER-MAG TRIP (100-200A)
N - MOLDED CASE SWITCH C/W
ELECTRONIC TRIP (250-1200A)
P - MOLDED CASE SWITCH C/W
ELECTRONIC & GF TRIP (250-1200A)

20. POWER CONNECTIONS
A - STANDARD
X - SPECIAL

21. ATS CONNECTION CONFIGURATION
A - STANDARD
B - ALTERNATE B (1000-1200A)
C - ALTERNATE C (1000-1200A)
D - ALTERNATE D (1000-1200A)

NOTES:
[1] MULTI-VOLTAGE CAPABLE
[2] FOR 50HZ APPLICATION
[3] STANDARD ENCLOSURE RATING IS N3R AT 800A AND ABOVE AND N4 AT 600A AND BELOW.
[4] ONLY AVAILABLE 800A AND ABOVE.
[5] 240V MAX

STOCKING MODELS

Model Number	Amperage	3 Pole	Standard ATS	Service Entrance Rated ATS	4 wire with Neutral	Multi-Voltage (Customer to specify 208-600V)	TSC 80e Controller	Nema 1 Enclosure	Nema 3R Enclosure	5 Programmable Output Contacts (10A,120VAC)
TS873A0100A1AY3AKKAA	100A	●	●		●	●	●	●		●
TS873A0150A1AY3AKKAA	150A	●	●		●	●	●	●		●
TS873A0200A1AY3AKKAA	200A	●	●		●	240V Max	●	●		●
TS873A0250A1AY3AKKAA	250A	●	●		●	●	●	●		●
TS873A0400A1AY3AKKAA	400A	●	●		●	●	●	●		●
TS873A0400B1AY3DNKAA	400A	●		●	●	●	●		●	●
TS873A0600A1AY3AKKAA	600A	●	●		●	●	●	●		●
TS873A0600B1AY3DNKAA	600A	●		●	●	●	●		●	●
TS873A0800A1AY3AKKAA	800A	●	●		●	●	●	●		●

OPTIONAL FEATURES

(Specify separately from ATS MODEL CODE when ordering)

CODE	DESCRIPTIONS
AUX-G	Auxiliary Contact - Generator side (up to qty. 3)
AUX-U	Auxiliary Contact - Utility side (up to qty. 3)
CED	Custom Engineered Drawings - Project Specific
EAP1601	Transfer to Emergency Annunciator, Alarm Horn & Silence Pushbutton
FTS-4	4 Function Test Switch (Auto/Off/Engine Start/Test)
LCK	Enclosure Lockable Door
TS-H1	Enclosure Strip Heater c/w Thermostat (120VAC External Power Source Required)
TS-H2	Enclosure Strip Heater c/w Thermostat (internally powered from ATS load)
TS-O&M	Additional ATS O & M Manuals (Specify qty.) (Alternatively Download from Web)
TS-STG	Shunt Trip Generator Switch
TS-STU	Shunt Trip Utility Switch
UPA	Utility Power Available Contact

Custom Options available upon request.

NOTE: Specifications subject to change without notice.

CL062 Rev 5 09/10/30 6523Z-SK-11/09-1500-RG

THOMSON TECHNOLOGY • 9087A - 198th STREET, LANGLEY, BC CANADA V1M 3B1

TELEPHONE: (604) 888-0110 • FAX: (604) 888-3381 • E-MAIL: info@thomsontechnology.com • www.thomsontechnology.com

Attachment: Holly Hill Lift Station 13 - Addendum 4 (2019-R-38 : Lift Station #13 Rehabilitation)

KLIM HOTSTART
SINCE 1942

Product Catalog

Engine Heaters

Oil Heaters

Controls

Accessories

Attachment: Holly Hill Lift Station 13 - Addendum 4 (2019-R-38 : Lift Station #13 Rehabilitation)

Section One

Industrial Tank Style Coolant Heaters

Small Tank Heaters

High Impact Plastic
Single Phase
500-2000 Watts
120V & 240V

View of a Kim Hotstart TPS tank heater. This durable heater is assembled with a built-in thermostat and 4-foot power cord.

- Molded from Polyphenylene Sulfide (PPS).
- Rust-free, resists corrosion, exceptional tensile strength.
- Vibration and shock tested to extreme limits to guarantee durability.
- Greatly reduced heat loss for more efficient operation.
- Compatible with all chemicals.
- Incoloy element for longer service life.
- Thermostatically controlled.
- All parts are field replaceable — not a throw away heater.
- Compact design requires minimal mounting space.

Ambient Above -20° F	Ambient Below -20° F	Kim Hotstart Model Number	Volts	Phase	Watts	Amps	Thermostat Range On	Thermostat Range Off
150 Cubic Inch or Less	150 Cubic Inch or Less	TPS051GT8-000	120	1	500	4.2	80°F	100°F
		TPS051GT10-000	120	1	500	4.2	100°F	120°F
		TPS051GT12-000	120	1	500	4.2	120°F	140°F
		TPS051GT12-A00	120	1	500	4.2	ADJUSTABLE*	
		TPS052GT8-000	240	1	500	2.1	80°F	100°F
		TPS052GT10-000	240	1	500	2.1	100°F	120°F
		TPS052GT12-000	240	1	500	2.1	120°F	140°F
		TPS052GT12-A00	240	1	500	2.1	ADJUSTABLE*	
350 Cubic Inch or Less	200 Cubic Inch or Less	TPS101GT8-000	120	1	1000	8.4	80°F	100°F
		TPS101GT10-000	120	1	1000	8.4	100°F	120°F
		TPS101GT12-000	120	1	1000	8.4	120°F	140°F
		TPS101GT12-A00	120	1	1000	8.4	ADJUSTABLE*	
		TPS102GT8-000	240	1	1000	4.2	80°F	100°F
		TPS102GT10-000	240	1	1000	4.2	100°F	120°F
		TPS102GT12-000	240	1	1000	4.2	120°F	140°F
		TPS102GT12-A00	240	1	1000	4.2	ADJUSTABLE*	
350 — 500 Cubic Inch or Less	200 — 300 Cubic Inch or Less	TPS151GT8-000	120	1	1500	12.5	80°F	100°F
		TPS151GT10-000	120	1	1500	12.5	100°F	120°F
		TPS151GT12-000	120	1	1500	12.5	120°F	140°F
		TPS151GT12-A00	120	1	1500	12.5	ADJUSTABLE*	
		TPS152GT8-000	240	1	1500	6.3	80°F	100°F
		TPS152GT10-000	240	1	1500	6.3	100°F	120°F
		TPS152GT12-000	240	1	1500	6.3	120°F	140°F
		TPS152GT12-A00	240	1	1500	6.3	ADJUSTABLE*	
500 — 700 Cubic Inch or Less	300 — 400 Cubic Inch or Less	TPS181GT8-000	120	1	1800	15	80°F	100°F
		TPS181GT10-000	120	1	1800	15	100°F	120°F
		TPS181GT12-000	120	1	1800	15	120°F	140°F
		TPS181GT12-A00	120	1	1800	15	ADJUSTABLE*	
		TPS202GT8-000	240	1	2000	8.3	80°F	100°F
		TPS202GT10-000	240	1	2000	8.3	100°F	120°F
		TPS202GT12-000	240	1	2000	8.3	120°F	140°F
		TPS202GT12-A00	240	1	2000	8.3	ADJUSTABLE*	

***Off temperature – adjustable 90-130°F (On differential – 20° F)**

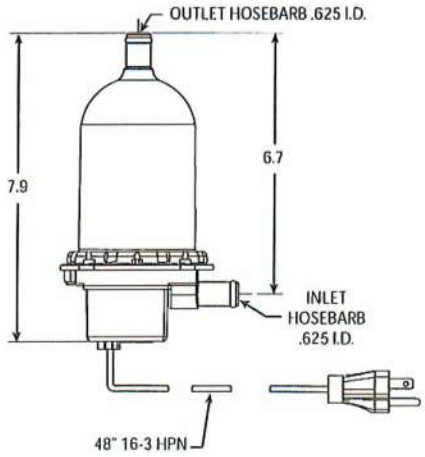

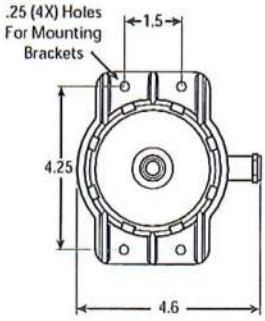

Attachment: Holly Hill Lift Station 13 - Addendum 4 (2019-R-38 : Lift Station #13 Rehabilitation)

NEW!
NEW!
NEW!

- Off temperature – adjustable from 90°F to 130°F (on differential 20°F).
- Control your optimum desired temperature.
- 5/8" hose barb for easy in-line installations.
- Watertight enclosure.

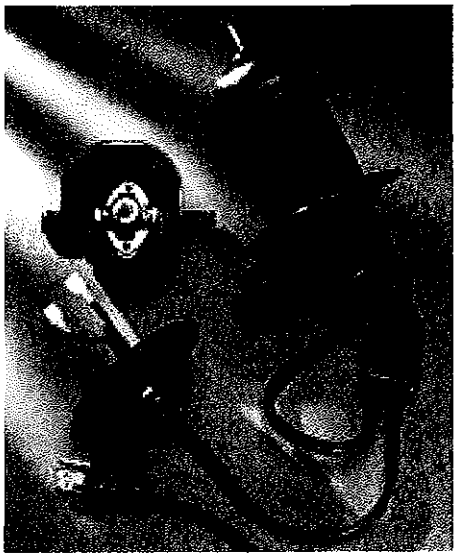

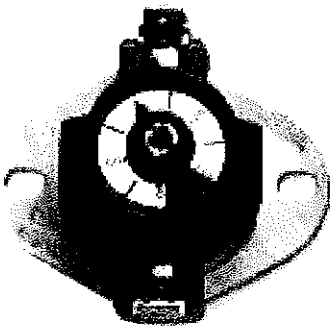

TPS Heaters

Now available with in-line adjustable or fixed thermostat

Types of Thermostats Available

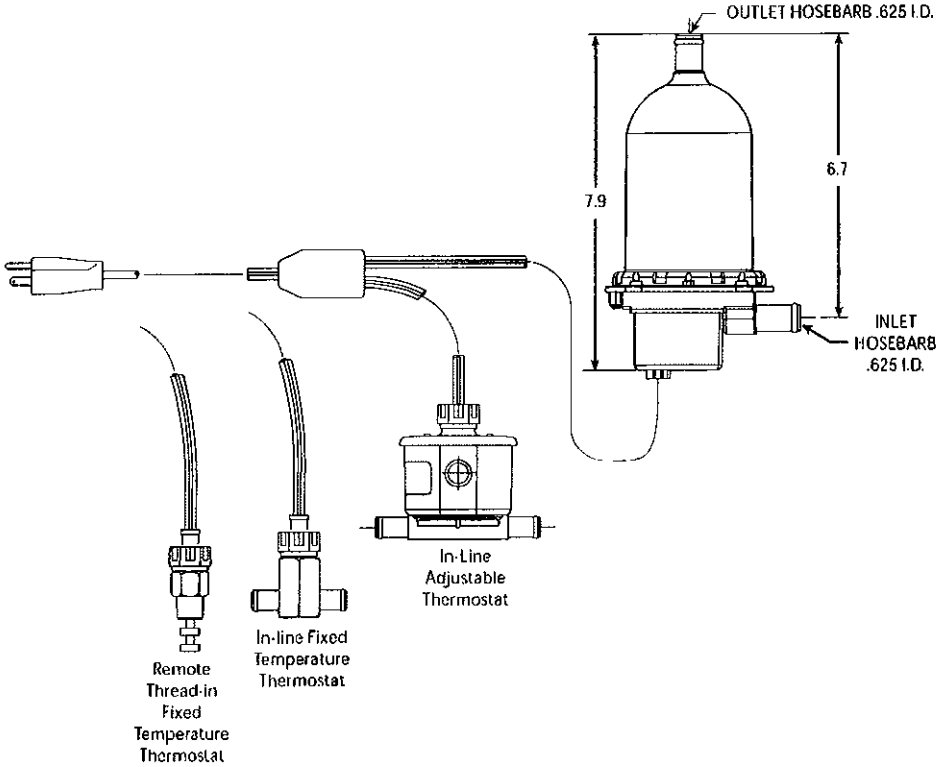

Also Available:

Models with "Y" harness and remote thread-in type thermostats in various fixed temperature ranges.

Models with "Y" harness and in-line type thermostats in various fixed temperature ranges.

For model numbers featuring ***fixed remote style thermostats***, please contact factory.

Attachment: Holly Hill Lift Station 13 - Addendum 4 (2019-R-38 : Lift Station #13 Rehabilitation)

Guest® Industrial Battery Chargers & Accessories

GUEST®

Rev C

Attachment: Holly Hill Lift Station 13 - Addendum 4 (2019-R-38 : Lift Station #13 Rehabilitation)

Why Guest® Industrial Chargers?

We'll Test Any Battery/Charger Combination For You

Guest has been an expert in battery and charging technology for over 30 years. We'll help you select the best battery and Guest charger combination for your OEM application. Then, we'll test that combination ***versus any competitor's charger***, using standardized tests in our specialized labs. All test results are fully-documented and charted for easy comparisons of initial and final battery states, charge times, and charging curves.

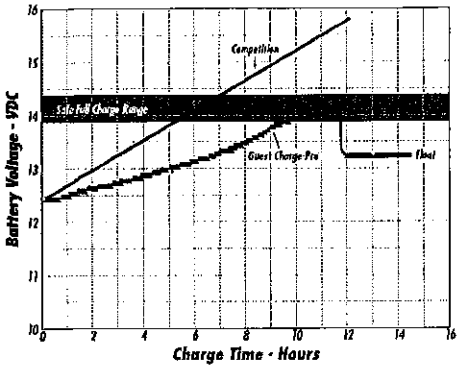

Maximize Battery Life With Guest's 3-Stage Chargers

More batteries are ruined by improper charging than by over-use. The safest, most efficient way to charge your batteries without making them too hot or boiling off electrolyte is in 3 distinct stages:

In the **bulk stage**, the charger uses its full amp output to do the heaviest charging, quickly bringing your battery to about 75% of capacity.

In the **absorption stage** current flow slows, adjusting for maximum charging efficiency while it gently tops off the battery to about 98% of capacity. Maintaining constant voltage lets the battery absorb the charge at its own rate.

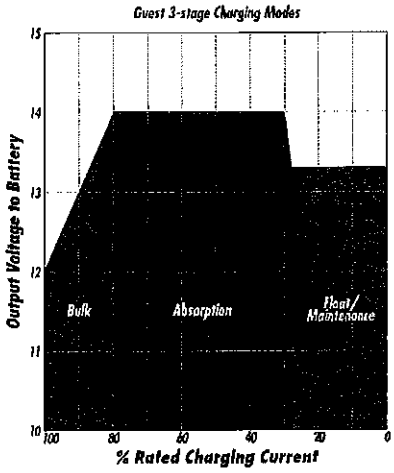

The **float or maintenance stage** applies a lower, closely-regulated, constant voltage to maintain full charge and prevent discharge. Unlike some "trickle chargers," Guest's float charger won't apply more current than necessary to maintain full charge.

Batteries can be connected indefinitely, without harm; in fact, the float charge extends battery life.

Special Charger Settings

Guest will fine-tune any or all of the 3-stage charging electrical outputs to meet the specific requirements of systems designers and/or battery manufacturers.

A Guest Exclusive: Multi-Task Charging (MTC)

In multi-battery applications, the needs of the individual batteries vary widely. A "starting" battery, replenished by the alternator, requires a different kind of charge than a deeply-depleted "constant-use" battery.

Guest's exclusive multiple-converter models include separate chargers for both starting and constant-use batteries, ***within the same housing.*** Each converter automatically delivers the power necessary to optimize each battery's recharge cycle.

Guest's MTC chargers have:

- **Dedicated cables** for each battery, so each battery can receive individual attention.
- **Differentiated amperages** to each battery depending on its usage curve.
- **Robust circuits** designed for continuous use as a power supply.

Samples of Multi-Task Charging Configurations:

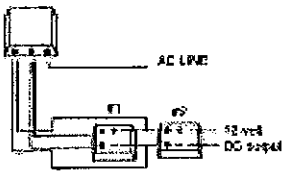

12 volt (parallel)

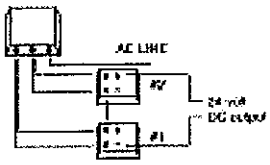

24 volt (series)

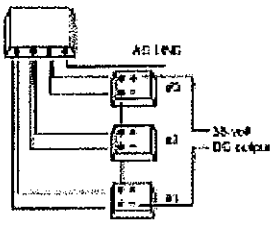

36 volt (series)

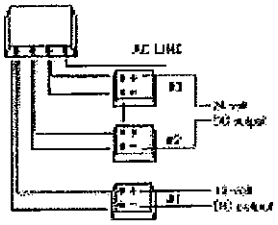

12v/24v-12

Attachment: Holly Hill Lift Station 13 - Addendum 4 (2019-R-38 : Lift Station #13 Rehabilitation)

Choose Your Charger:

Output Voltage	Output Amps	No. of Outputs	Battery System (Batteries On Board)	Output Terminations[1]	No. of Sets & Length of Output Cables[2]	Dimensions W x H x D (inches)	Weight (lbs)	Model Number: Bulk Pack	Model Number: Retail Pack	Approvals
115V Portables, accepting input power of 95–130vAC/50-60Hz										
6	0.5	1	(portable)	Alligator Clips	One-4'	—	0.5	—	2602-6	
12	0.5	1	(portable)	Alligator Clips	One-4'	—	0.5	2602-B	2602	
12	3	1	(portable)	Alligator Clips	One-4'	—	1.5	—	2603	
12	6	1	(portable)	Alligator Clips	One-4'	5 x 3-1/2 x 2-1/4	4	2606A-B	2606A	cUL in bulk[3]
12	10	1	(portable)	Alligator Clips	One-4'	5 x 5 x 2-1/4	6	—	2612A	cUL
115V On-Board and/or Portables, accepting input power of 95-130vAC/50-60Hz										
12	2	1	1	Ring Terminals	One-4'	5 x 3 x 1-1/2	1.5	2602A-12	—	cUL
12	6	1	1	Ring Terminals	One-4'	6-3/8 x 3-1/2 x 2-1/16	4	2608-B	2608	cUL in bulk[3]
12	5/5	2	2	Hard Wire Posts	—	7-3/4 x 5-1/8 x 2-1/16	5	2610-B	2610	
12	10	1	2	Ring Terminals	Two-4'	7-3/4 x 5-1/8 x 2-1/16	6	2611-1-B	—	
12	10/5	2	2	Ring Terminals	Two-10'	12-1/4 x 6-1/2 x 2-1/2	10	2614-B	2614	
12	20/10	2	2	Hard Wire Posts	Two-10'	15-2/3 x 6-1/2 x 2-1/2	13	2633-B	2633	
12 or 24	3/3	2	1 or 2 in series	Ring Terminals	Two-4'	6-3/8 x 3-1/2 x 2-1/16	4	2607-B	2607	cUL in bulk[3]
12 or 24	5/5	2	1 or 2 in series	Ring Terminals	Two-4'	7-3/4 x 5-1/8 x 2-1/16	6	2611-B	2611	cUL in bulk[3]
12 or 24	5/5/5	3	2 or 3	Ring Terminals	Three-4'	9-1/4 x 6 x 3-1/4	10	2613-B	2613	
12 or 24	10/10	2	1 or 2 in series	Ring Terminals	Two-6'	9-1/4 x 6 x 3-1/4	10	2620-B	2620	
12 or 24	10/5/10	3	2 or 3	Ring Terminals	Three-6'	12-5/8 x 6 x 3-1/4	13	2623-B	2623	
12 or 24	10/10	2	1 or 2 in series	Ring Terminals	Two-10'	9-1/4 x 6 x 3-1/4	10	2622-B	2622	
12 or 24	15/15	2	1 or 2 in series	Ring Terminals	Two-10'	9-1/4 x 6 x 3-1/4	10	2730-B	2730	
24	1.25	1	2 in series	Ring Terminals	One-4'	5-5/16 x 2-5/8 x 1-7/16	1.5	26015-24	—	cUL
24	2	1	2	Ring Terminals	One-4'	5 x 3 x 1-1/2	1.5	2602A-24	—	cUL
24	3	1	2	3-pin AMP®	One-8"	6-3/8 x 3-1/2 x 2-1/16	4	2903-1-24	—	cUL
24	5	1	2	3-pin AMP®	One-8"	7-3/4 x 5-1/8 x 2-1/16	6	2605A-1-24	—	cUL
24	10	1	2	Ring Terminals	One-6'	9-1/4 x 6 x 3-1/4	10	2620-1-B	—	
24	15	1	2	Ring Terminals	One-6'	9-1/4 x 6 x 3-1/4	10	2730-24-B	—	
12,24,36	10/10/10	3	3	Ring Terminals	Three-6'	12-5/8 x 6 x 3-1/4	13	2631-B	2631	
12,24,36	15/15/15	3	3	Ring Terminals	Three-6'	15-1/2 x 7-1/2 x 2-1/2	27	—	2745A	
36	10	1	3	Ring Terminals	One-6'	12-5/8 x 6 x 3-1/4	13	2631-36-B	—	
36	15	1	3	Ring Terminals	One-6'	12-5/8 x 6 x 3-1/4	13	2745-36-B	—	
48	6	1	1	Ring Terminals	One-6'	12-5/8 x 6 x 3-1/4	13	2631-48-B	—	cUL
12,24,36,48	6/6/6/6	4	4	Ring Terminals	Four-6'	12-5/8 x 6 x 3-1/4	13	2631-48-4	—	
230v On-Board and/or Portables, accepting input power of 200-260vAC/50-60Hz										
12	0.5	1	1	Alligator Clips	One-4'	—	0.5	2602-50-230	—	CE
12	10	2	2	Hard Wire Posts	—	7-3/4 x 5-1/8 x 2-1/16	5	2610-230-B	—	CE
12 or 24	10/10	2	1 or 2	Ring Terminals	Two-6'	9-1/4 x 6 x 3-1/4	10	2620-230-B	—	CE
12	20/10	2	2 in parallel	Ring Terminals	Two-6'	15-2/3 x 6-1/2 x 2-1/2	13	2633-230	—	CE
12,24,36	10/10/10	3	3	Ring Terminals	Three-6'	12-5/8 x 6 x 3-1/4	13	2631-230	—	CE

1 Custom terminations available: contact factory.
2 Custom cable lengths and configurations available: contact factory.
3 Charger has cUL approval when ordered in bulk pack.

Attachment: Holly Hill Lift Station 13 - Addendum 4 (2019-R-38 : Lift Station #13 Rehabilitation)

115V On-Board Chargers: Standard Models

(Listed by Increasing Output Voltage)

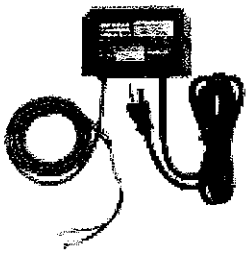

2602A-12 (Bulk Pack, cUL)

Input Voltage: 115AC
Output Voltage: 12V
DC Amperage: 2A@12V
Output Cables: 1 set, 4' long
DC Terminations: Ring Terminals
No. of 12V Batteries: 1

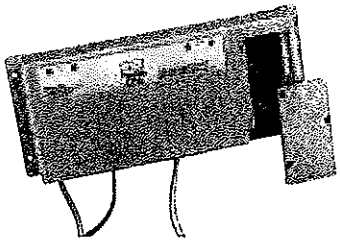

2633-B (Bulk Pack)
2633 (Retail Pack)

Input Voltage: 115AC
Output Voltage: 12V
DC Amperage: 30A@12V (20A/10A)
Output Cables: 2 sets, 10' long
DC Terminations: Ring Terminals
No. of Batteries: 2 in 12V configuration

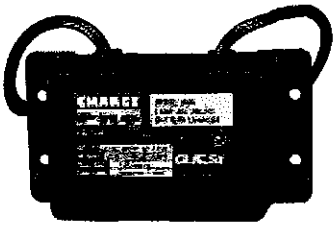

2608-B (Bulk Pack, cUL)
2608 (Retail Pack)

Input Voltage: 115AC
Output Voltage: 12V
DC Amperage: 6A@12V
Output Cables: 1 set, 4' long
DC Terminations: Ring Terminals
No. of 12V Batteries: 1

2607-B (Bulk Pack, cUL)
2607 (Retail Pack)

Input Voltage: 115AC
Output Voltage: 12V or 24V
DC Amperage: 6A@12V (3A/3A)
Output Cables: 2 sets, 4' long
DC Terminations: Ring Terminals
No. of Batteries: 2 in 12V or 1 in 24V configuration

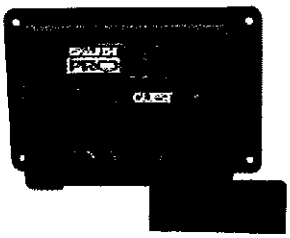

2610-B (Bulk Pack)
2610 (Retail Pack)

Input Voltage: 115AC
Output Voltage: 12V
DC Amperage: 10A@12V
DC Terminations: Hard Wire Posts
No. of 12V Batteries: 2

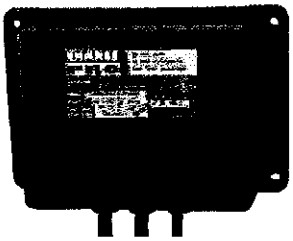

2611-B (Bulk Pack, cUL)
2611 (Retail Pack)

Input Voltage: 115AC
Output Voltage: 12V or 24V
DC Amperage: 10A@12V (5A/5A)
Output Cables: 2 sets, 4' long
DC Terminations: Ring Terminals
No. of Batteries: 2 in 12V or 1 in 24V configuration

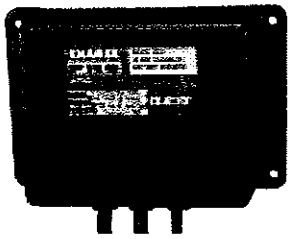

2611-1-B (Bulk Pack)

Input Voltage: 115AC
Output Voltage: 12V
DC Amperage: 10A@12V
Output Cables: 1 set, 4' long
DC Terminations: Ring Terminals
No. of 12V Batteries: 2

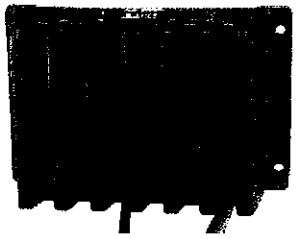

2613-B (Bulk Pack)
2613 (Retail Pack)

Input Voltage: 115AC
Output Voltage: 12V or 24V
DC Amperage: 15A@12V (5A/5A/5A)
Output Cables: 3 sets, 4' long
DC Terminations: Ring Terminals
No. of Batteries: 3 either in a 12V+24V configuration or 3 in 12V

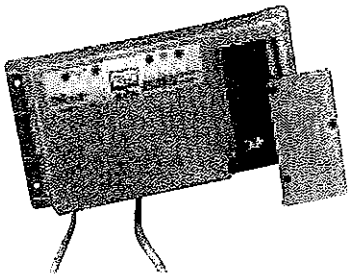

2614-B (Bulk Pack)
2614 (Retail Pack)

Input Voltage: 115AC
Output Voltage: 12V
DC Amperage: 15A@12V (10A/5A)
Output Cables: 2 sets, 10' long
DC Terminations: Ring Terminals
No. of 12V Batteries: 2

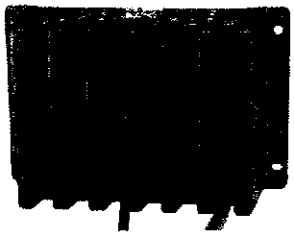

2620-B (Bulk Pack)
2620 (Retail Pack)

Input Voltage: 115AC
Output Voltage: 12V or 24V
DC Amperage: 20A@12V (10A/10A)
Output Cables: 2 sets, 6' long
DC Terminations: Ring Terminals
No. of Batteries: 2 in 12V or 24V configuration

Attachment: Holly Hill Lift Station 13 - Addendum 4 (2019-R-38 : Lift Station #13 Rehabilitation)

HOLLY HILL
FLORIDA

STAFF REPORT
CITY OF HOLLY HILL, FLORIDA

City Commission
Resolution

MEETING DATE: **June 25, 2019**
FROM: **Joseph Forte**
SUBJECT: **A Resolution of the City Commission of the City of Holly Hill, Florida, Authorizing the City Manager to Sign a One Year Lease Agreement Extension Between the City of Holly Hill and the Volusia/Flagler YMCA; Establishing the Terms of This Agreement; Providing for Severability; and Providing for an Effective Date.**
NUMBER: **2019-R-39**
APPLICANT:
PLANNER:

DISCUSSION:

The Volusia/Flagler YMCA currently holds a contract with the City of Holly Hill to serve the community with certain recreational activities at the recreation facility located at 1046 Daytona Avenue. This discussion is to approve a contract for a period of one additional (1) one year term.

In this contract, the YMCA shall continue to:

- Supply the necessary staff and equipment to provide the following or similar types of activities: tennis lessons, community swim, water aerobics, dance class, karate, spinning, and weight room use. These services would be offered at the current Y pricing structure and the current Y operating hours;
- Subsidize those who cannot afford full monthly membership;
- Not duplicate sports being offered at the Hollyland Park location which may be offered by another party or the City;

The following items have not changed in this contract:

- No Y administration overhead charge to the City;
- Maintenance costs shall remain the same as under the current agreement;
- A daily fee of $5.00 to Holly Hill residents that is inclusive of all non-fee based activities;
- The fee to provide these services would be $45,000 annually.

Staff recommends that the City Commission accept the lease agreement with the YMCA to provide services for the amount of $45,000 / year. The agreement would be effective October 1, 2019 and would be for a period of one year.

FISCAL ANALYSIS:

Fully funded in FY 2019-2020 budget.

STAFF RECOMMENDATION:

Approve the lease agreement and authorize the City Manager to execute the lease agreement with Volusia/Flagler YMCA to operate as the recreation program provider for the Daytona Avenue facility as outlined in the attached lease agreement.

COMMISSION GOAL:

Goal #1: Develop and maintain a sound and sustainable financial plan for the city that establishes sufficient reserves for all funds, ensures (whenever possible) that user fees pay for services rendered, provides a realistic capital improvement program, and encourages public/private sector partnerships and intergovernmental partnerships.

Goal #5: Promote a small town city "branding" that focuses on the city's accessible staff and interactive use of technologies (i.e. city website), the city's business friendly approach to attract and retain business, and the city's available open space, parks, and waterfront amenities that enhance the quality of life for citizens.

MOTION:

APPROVING THE LEASE AGREEMENT AND AUTHORIZING THE CITY MANAGER TO EXECUTE THE AMENDED LEASE AGREEMENT WITH VOLUSIA/ FLAGLER YMCA TO OPERATE AS THE RECREATION PROVIDER FOR THE DAYTONA AVENUE FACILITY.

ATTACHMENTS:

- YMCA Lease Agreement Effective 10-1-2019 (PDF)

Resolution No. 2019-39

A RESOLUTION OF THE CITY COMMISSION OF THE CITY OF HOLLY HILL, FLORIDA, AUTHORIZING THE CITY MANAGER TO SIGN A ONE YEAR LEASE AGREEMENT EXTENSION BETWEEN THE CITY OF HOLLY HILL AND THE VOLUSIA/FLAGLER YMCA; ESTABLISHING THE TERMS OF THIS AGREEMENT; PROVIDING FOR SEVERABILITY; AND PROVIDING FOR AN EFFECTIVE DATE.

A RESOLUTION OF THE CITY COMMISSION OF THE CITY OF HOLLY HILL, FLORIDA, AUTHORIZING THE CITY MANAGER TO SIGN A ONE YEAR LEASE AGREEMENT EXTENSION BETWEEN THE CITY OF HOLLY HILL AND THE VOLUSIA/FLAGLER YMCA, ESTABLISHING THE TERMS OF THIS AGREEMENT; PROVIDING FOR SEVERABILITY; AND PROVIDING AN EFFECTIVE DATE.

WHEREAS, The City of Holly Hill desires to continue its relationship with the Volusia Flagler YMCA in order to provide recreational programs at the recreational facility located at 1046 Daytona Avenue; and

WHEREAS, the YMCA has a nationally recognized reputation and long-term history of providing quality community recreation programs; and

WHEREAS, the City of Holly Hill and the Volusia Flagler YMCA entered into a three agreement on June 1, 2010 and approve a three extension to the lease agreement on January 8, 2003 and another three year extension on September 27, 2016; and

WHEREAS, the City of Holly Hill and the Volusia Flagler YMCA wish to extend this agreement for one additional year.

NOW, THEREFORE, BE IT RESOLVED BY THE CITY COMMISSION OF THE CITY OF HOLLY HILL, FLORIDA:

SECTION 1. That the City Manager is hereby authorized to sign the lease agreement, attached hereto, so that the Volusia Flagler YMCA may continue to perform as a recreation provider at the Daytona Avenue facility.

SECTION 2. That the term of this agreement shall commence on October 1, 2016 and end on September 30, 2019.

SECTION 3. SEVERABILITY. If any section or portion of a section of this Resolution proves to be invalid, unlawful, or unconstitutional, it shall not be held to invalidate or impair the validity, force, or effect of any other section or part of this Resolution.

SECTION 4. EFFECTIVE DATE. This Resolution shall take effect immediately upon its adoption.

APPROVED AND AUTHENTICATED on this 25th day of JUNE, 2019.

CITY OF HOLLY HILL - YMCA LEASE AGREEMENT

THIS AGREEMENT made June 1, 2010, amended July 14,2011 by resolution 2011-R-37, amended January 8, 2013 by resolution 2013-R-03, and amended August 13, 2013 by resolution 2013-R-52, amended September 27, 2016 by resolution 2016-R-55, amended June 25, 2019 by Resolution 2019-R-XX, by and between CITY OF HOLLY HILL, a Florida municipality, (CITY) and VOLUSIA FLAGLER FAMILY YOUNG MEN'S CHRISTIAN ASSOCIATION, INC. a Florida non-profit corporation, ("YMCA").

WHEREAS, the CITY owns certain buildings and facilities located in the Recreation Department Complex, as delineated in Exhibit "A" (hereinafter referred to as FACILITIES);

WHEREAS, the CITY has traditionally provided certain recreation programs at the FACILITIES at an approximate cost to the citizens of $400,000 annually;

WHEREAS, budgetary constraints force the CITY to seek alternative, more cost efficient and effective methods for providing those services.

WHEREAS, the YMCA is recognized nationwide for its expertise at providing recreation programs in a cost effective and efficient manner;

WHEREAS, the YMCA, due to economic constraints, requires a new location from which to provide ongoing recreational programs as well as expanded programs to the community;

WHEREAS, the CITY and the YMCA desire to enter into this Agreement for the CITY to retain the YMCA to provide the CITY's family health and wellness programs as more specifically set forth herein.

NOW, THEREFORE, in consideration of the terms, conditions, promises, covenants and payments hereinafter set forth, the CITY and YMCA agree as follows:

ARTICLE I – CONDITIONS, TERM AND RENTAL

Section 1.1 Conditions

a) The CITY, for and in consideration of the covenants and agreements herein contained on the part of the YMCA, shall lease FACILITIES to the YMCA, to have and to hold the same for and during the term of this Lease, as hereafter set forth.

b) The FACILITIES shall be referred to as the CITY of Holly Hill YMCA in documents related to programs provided at said FACILITIES and all logos and signage. All logos and signage shall to the extent possible incorporate the City of Holly Hill Logo.

Attachment: YMCA Lease Agreement Effective 10-1-2019 (2019-R-39 : YMCA One Year Lease Agreement)

Section 1.2 YMCA's Fixtures

a) YMCA has inspected the FACILITIES and is accepting the FACILITIES in an "AS IS" condition. The fixtures and improvements that exist in the FACILITIES as of the effective date of this Lease shall remain and be deemed part of the FACILITIES.

b) CITY is not obligated to provide any other equipment or other improvements to the FACILITIES as part of this Lease.

c) YMCA shall furnish all other equipment that is necessary for the use by the YMCA including, but not limited to, office equipment, nautilus equipment, free weights and sporting equipment, etc. YMCA agrees to maintain said equipment in a safe, sanitary and neat condition, and in accordance with applicable governmental standards at all times.

d) All of YMCA'S trade fixtures, and all personal property, signage, apparatus, machinery and equipment hereafter supplied by YMCA and located upon the FACILITIES, whether or not the same are affixed thereto, shall be and remain the personal property of the YMCA and may, at the option of the YMCA, be removed from the FACILITIES, provided YMCA is not in default at the termination of this Lease or as otherwise provided in Section 4.4. The YMCA shall repair and restore the FACILITIES to the condition that existed when this Lease commenced, reasonable wear and tear excepted and the YMCA shall repair all damages to the FACILITIES that occurs during the removal of the fixtures and personal property at the end of the Lease term. Any fixtures or personal property that are not removed by the YMCA at the end of the Lease term shall be deemed the sole and exclusive property of the CITY.

Section 1.3 Rental Commencement Date

This Lease shall become effective October 1, 2019 and shall continue for a period of three (1) year expiring on September 30, 2020.

Section 1.4 Subsidy

The City covenants and agrees to pay to the YMCA as a subsidy for the FACILITIES, the sum of forty five thousand dollars ($45,000) per year, payable quarterly with first payment of $11,250 paid on October 15,2016. Remaining payments as follows:

$11,250 due on January 15,
$11,250 due on April 15,
$11,250 due on July 15

Section 1.5 Renewal, Replacement and Repair

a) Repairs with an estimated cost in excess of $1,500 per occurrence shall be the full responsibility of the CITY. For example, if the air conditioner requires a repair in the

Attachment: YMCA Lease Agreement Effective 10-1-2019 (2019-R-39 : YMCA One Year Lease Agreement)

amount of $2,000, the CITY shall be responsible for the entire cost of that repair and not just the amount that exceeded $1,500.

b) YMCA may construct additional improvements on the FACILITIES only with the prior written approval of CITY. The cost of such improvements and the cost of operation and maintenance thereof shall be the responsibility of YMCA.

c) The CITY shall have the right to inspect the Facility annually or upon providing the YMCA with at least 24 hours advance notice.

Section 1.6 Utilities

The City shall make all arrangements for and pay timely all costs of all utilities and services furnished to or used by it, which shall be gas, electricity, water, storm water, internet access, trash collection and sewer services.

Section 1.7 Additional Taxes

The parties acknowledge that as a YMCA Facility, YMCA presently enjoys a tax exempt status, however, to the extent the same may be applicable, YMCA shall pay all taxes, including any tax due on any rent payable under this Lease, all personal property taxes, all real property taxes, leasehold improvements and/or leasehold interest taxes, sales taxes which may be assessed against or arise by reason of YMCA'S leasing of the FACILITIES or its operation of the FACILITIES as a YMCA Facility.

Section 1.8 Financial Reports

a) During the term of this Lease, including the term of any extension or renewal, YMCA shall submit to CITY annual financial reports, audited by an independent certified public accountant, within ninety (90) days after final approval of the report by the YMCA Board of Directors.

ARTICLE I I – USE AND OPERATION OF FACILITY

Section 2.1 YMCA Use

YMCA shall occupy and use the FACILITIES for a YMCA Facility and shall provide public family health and wellness programs that are typically provided by the YMCA. These programs shall include the following, or similar types of activities: tennis lessons, community swim, water aerobics, dance class, karate, spinning and weight room usage.

Section 2.2 CITY Use of Facilities

YMCA shall permit and allow CITY, without charge, to use the gym and pool facilities located on the FACILITIES, subject to the following conditions:

Attachment: YMCA Lease Agreement Effective 10-1-2019 (2019-R-39 : YMCA One Year Lease Agreement)

a) Use of said FACILITIES by CITY shall not exceed a total of 20 hours per calendar year.

b) Any hours CITY does not use said FACILITIES in one (1) calendar year shall not be carried forward to the next calendar year.

c) Dates and times for use of said FACILITIES by CITY shall be subject to mutual agreement between director of YMCA's Holly Hill branch and the City Manager.

Section 2.3 CITY Use of Parking Areas

The YMCA shall permit and allow CITY, without charge, to use the parking lots and other parking areas located on the FACILITIES for parking of vehicles during special events and activities conducted on any portion of adjacent CITY property, including, but not limited to, CITY hall, gymnasium, athletic fields, municipal complex and grounds.

Section 2.4 Compatibility

a) The YMCA agrees to operate, maintain and promote the operation and maintenance of the FACILITIES in a manner consistent with nationwide and local YMCA policies and practices.

b) The YMCA agrees that operation of the FACILITIES shall be in accordance with applicable CITY regulations. The YMCA further agrees to comply with reasonable requests of the CITY pertaining to the operation and promotion of the City of Holly Hill YMCA in order to provide for the safety of YMCA members and the public.

c) YMCA agrees that operation of the FACILITIES as a YMCA Facility will not unreasonably interfere with the use of the contiguous park area by members of the general public or by CITY. It is the parties' intention that the operation of the FACILITIES will be compatible with other CITY Recreation Programs.

d) The YMCA agrees that operation of the FACILITIES shall not interfere with the use of other CITY recreational facilities such as sports fields utilized by various team sports organizations.

e) The parties hereto agree to coordinate any special events and/or programs within their operations. YMCA agrees that it will not discriminate in its hiring or promotional practices.

f) The tennis courts and handball courts associated with the FACILITY shall remain open without charge to the general public except as posted, a minimum of one week in advance, for scheduled YMCA activities to include but not be limited to Holly Hill YMCA classes, tournaments, etc.

Attachment: YMCA Lease Agreement Effective 10-1-2019 (2019-R-39 : YMCA One Year Lease Agreement)

g) The YMCA shall not be charged a field usage fee for Holly Hill YMCA programs offered at Hollyland Park.

h) The YMCA shall not duplicate youth sports offered at Hollyland Park or the 1200 Center Avenue location which may be offered by the CITY or another party.

Section 2.5 Maintenance

It shall be the responsibility of YMCA to keep the premises clean, sanitary and free from trash and debris. The complete upkeep and maintenance shall be borne by YMCA and YMCA agrees to maintain the premises in accordance with the terms and conditions of this Lease and consistent with prudent and well-reasoned maintenance procedures and techniques. The CITY shall be responsible for all lawn maintenance.

Section 2.6 Schedule of Operation

Holly Hill YMCA staff will determine the hours of operation of the Holly Hill YMCA. Prior to changing any facility hours the YMCA CEO will confer with the Holly Hill City Manager.

Section 2.7 Concessions

The YMCA may, but shall not be required to, dispense food and/or drink on the premises for consumption by users of the Facility.

Section 2.8 Fees

a) Holly Hill YMCA member and program fees will be consistent with all Volusia Flagler YMCAs. Fees are set by staff and approved by YMCA Corporate Board of Directors.

b) The YMCA will subsidize those who cannot afford full monthly membership rates at the current Y YOUR plan rates.

c) The YMCA will provide a daily fee option of $5.00 to Holly Hill residents that is inclusive of all non-fee based activities.

d) There will be no YMCA administration overhead charged to the City of Holly Hill.

ARTICLE III - INSURANCE

Section 3.1 Insurance Requirements and Indemnification

YMCA shall fully indemnify and otherwise hold harmless CITY from any and all claims, demands or suits arising out of or otherwise attributable to YMCA or the occupancy of the FACILITIES by YMCA asserted by any party whatsoever, and this indemnity shall include all costs incurred by CITY, including reasonable defense attorney's fees. Without limiting any of the other obligations or liabilities of YMCA, YMCA shall provide, pay for, and maintain in force, throughout the term of this Lease, the insurance coverage set forth in this Article.

Attachment: YMCA Lease Agreement Effective 10-1-2019 (2019-R-39 : YMCA One Year Lease Agreement)

a) Workers Compensation Insurance to apply for all employees in compliance with the "Workers Compensation Law" of the State of Florida and all applicable Federal laws. In addition, the policy(s) must include:

b) Employers' Liability with a limit of One Hundred Thousand Dollars ($100,000.00) each accident.

c) Comprehensive General Liability with minimum limits of One Million Dollars ($1,000,000.00) per occurrence combined single limit for Bodily Injury Liability and Property Damage Liability. Coverage must be afforded on a form no more restrictive than the latest edition of the Comprehensive General Liability policy, without restrictive endorsements, as filed by the Insurance Services Office and must include:

i. Premises and/or Operations
11. Independent Contractors

d) Personal Injury Coverage with Employee and Contractual Exclusions removed with minimum limits of coverage equal to those required for Bodily Injury Liability and Property Damage Liability.

Section 3.2 **Additional Insured**

CITY shall be included as an "Additional Insured" in the name of "City of Holly Hill" with respect to liability arising out of operations performed for CITY by or on behalf of YMCA or acts or omissions of CITY in connection with general supervisions of such operations.

Section 3.3 **Notification**

The policy(s) must be endorsed to provide the City of Holly Hill with thirty (30) days notice of cancellation and/or restriction.

ARTICLE IV-TERMINATION

Section 4.1 Termination by CITY

The occurrence of any of the following may cause this Lease to be terminated at the option of the CITY by notice to the YMCA.

a) Assignment by YMCA for the benefit of creditors.

b) Abandonment or discontinuation of operations at the FACILITIES during usual business hours and on such days as comparable facilities are open for business, unless such abandonment or discontinuation shall be due to causes beyond YMCA'S reasonable control such as, without limitation, acts of God, government laws or action, war, civil commotion, casualty, fire, storm, labor disputes or energy shortages, as long as

Attachment: YMCA Lease Agreement Effective 10-1-2019 (2019-R-39 : YMCA One Year Lease Agreement)

operations commence immediately after the event causing the discontinuance ceases to exist.

c) The CITY shall have the right to terminate this Lease after thirty (30) days written notice by registered mail to YMCA, of the non-performance of any provisions of this Lease, unless the same shall have been corrected or remedial action started and diligently pursued within such period, to the reasonable satisfaction of the CITY.

Upon any termination pursuant to this Section, or if YMCA fails to exercise its option to renew, CITY shall have, in addition to any other remedies, the option to require that YMCA remove, at YMCA'S cost, all improvements made by YMCA to the FACILITIES. If the YMCA fails to remove the fixtures and personal property as requested by the City, said fixtures and personal property shall become the sole property of the CITY.

Section 4.2 Termination by YMCA

YMCA shall have the right upon thirty (30) days written notice to the CITY to terminate this Lease at any time after the occurrence of one or more of the following events:

a) Issuance by any court of competent jurisdiction of any injunction substantially restricting the use of the facilities for its intended purposes, and the remaining in force of said injunction or period of more than thirty (30) calendar days.

b) A breach by the CITY of any of the terms, covenants or conditions contained in this Lease and the failure of the CITY to remedy such breach within thirty (30) days after receipt of written notice sent by registered mail from YMCA of the existence of such breach, unless the same shall have been corrected or remedial action started and diligently pursued within such period.

c) The assumption by the United States Government or any authorized agency thereof, or any other governmental agency, or the operation control or use of the facilities, or any substantial part, or parts, thereof in such a manner as substantially to restrict YMCA'S operations for a period of thirty (30) calendar days or more.

Section 4.3 Right to Remove Personal Property

At the termination of the Lease, either by expiration of the term or otherwise (except in the case of termination without cause by the YMCA), YMCA shall have the right to remove from the FACILITIES all its personal property and equipment used in the operation provided, however, that the CITY shall have a first and prior lien upon all such personal property to secure the payment to it of any and all sums due from YMCA.

Section 4.4 Termination Without Cause

a) CITY shall have the right to terminate this Lease upon 180 days written notice without cause and without penalty. Notwithstanding any provision hereof to the contrary, upon such

Attachment: YMCA Lease Agreement Effective 10-1-2019 (2019-R-39 : YMCA One Year Lease Agreement)

termination, the YMCA shall have the option of removing equipment and furnishings provided by the YMCA as long as the YMCA repairs any damage sustained in the removal of said equipment and furnishings.

b) YMCA may terminate this Lease without cause upon providing CITY with 180 days written notice. Upon such termination and as liquidated damages for the termination, YMCA agrees to convey to the CITY and leave in the FACILITIES all furnishings and equipment normally located thereon by YMCA.

ARTICLE V – MISCELLANEOUS

Section 5.1 Assignment

a) Subject to the provisions of this Lease, YMCA shall not assign or encumber its interest in this Lease or in the FACILITIES, or allow any other person or entity (except YMCA'S authorized representatives) to occupy or use all or any part of the premises and the building and improvements located thereon, without first obtaining CITY'S written consent.

b) CITY shall not unreasonably withhold or delay its consent. However, any proposed assignee must have similar background and experience in the operation of a YMCA Facility, must operate the facility and provide substantially the same services on the FACILITIES as provided in this Lease and must have adequate financial resources.

c) Should YMCA assign or attempt to assign this Lease or sublet any portion of the FACILITIES without the prior written consent of the CITY, then this Lease shall be terminated forthwith, without prior notice to YMCA. No consent to any assignment or encumbrance shall constitute a waiver of the provisions of this Section.

Section 5.2 Risk of Loss

The YMCA agrees to assume all risks of loss by fire, water, weather or other unforeseen damages to or destruction of any property or stock placed on the premises by the CITY and to hold the CITY harmless from any responsibility or liability therefore.

Section 5.4 CITY'S Warranties- Quiet Enjoyment

a) CITY covenants and warrants that it has full right and lawful authority to enter into this Lease for the full term hereof.

b) CITY covenants and agrees to and with YMCA that at all times when YMCA is not in default under the terms of and during the term of this Lease, YMCA'S quiet and peaceable enjoyment of the FACILITIES shall not be disturbed or interfered with by CITY or any person claiming by, through or under CITY.

Section 5.5 Approvals

It is understood by the parties to this Lease that where the approval of either of the parties is required by the Lease, such approval shall not be unreasonably withheld.

Section 5. 6 No waiver

Failure of either party to insist upon strict performance of any covenant or condition of this Lease, or to exercise any right herein contained, shall not be construed as a waiver or relinquishment for the future of any such covenant, condition or right; but the same shall remain in full force and effect. None of the conditions, covenants or provisions of this Lease shall be waived or modified except by the parties hereto in writing.

Section 5.7 Net Lease

This Lease is, except to the extent otherwise provided herein, a net lease, and YMCA hereby assumes and agrees to pay and perform all payments, expenses, duties and obligations with relation to the FACILITIES, the improvements constructed upon the FACILITIES and appurtenances thereto, maintenance and operation thereof, whether such duties and obligations would otherwise be construed to be those of the CITY or YMCA, except as otherwise provided herein, so that no matter from what source arising, if anything shall be required to be done in, upon or about the FACILITIES, the improvements constructed upon the FACILITIES or appurtenances thereto, the same shall be done and fulfilled at the sole expense and responsibility of YMCA, without any expense, liability, or obligations whatsoever to or on the CITY, except for such obligations as are expressly assumed by the CITY herein.

Section 5.8 Independent Contractor

a) YMCA is an independent contractor under this Lease. Services provided by YMCA shall be by employees of YMCA and subject to the supervision by YMCA, and not as officers, employees or agents of the CITY.

b) Personnel policies, tax responsibilities, social security and health insurance, employee benefits, travel, per diem policies, purchasing policies and other similar administrative procedures applicable to services rendered by YMCA in the FACILITIES shall be those of YMCA.

c) Nothing contained in this Lease shall be deemed or construed by the parties hereto or by any third party to create the relationship of principal and agent or of partnership or of joint venture or of any association whatsoever between the CITY and YMCA, it being expressly understood and agreed that neither the method of computation of rent nor any of the other provisions contained in this Lease nor any act or acts of the parties hereto shall be deemed to create any relationship between the CITY and YMCA other than the relationship of landlord and tenant.

Attachment: YMCA Lease Agreement Effective 10-1-2019 (2019-R-39 : YMCA One Year Lease Agreement)

Section 5.9 Entire Agreement

This Lease expresses the whole agreement between the parties, there being no representation, warranties or other understanding not hereto expressly set forth or provided for. No change or modification of or addition to this Lease shall be valid unless in writing and signed by parties hereto.

Section 5.10 Governing Law

This Lease shall be governed by and interpreted in accordance with the laws of the State of Florida. Venue for any litigation arising out of or related to this Lease shall be in State Court, Seventh Judicial Circuit, Volusia County, Florida and the parties specifically waive any Federal Court jurisdiction. The prevailing party in any litigation arising out of or related to this Lease shall be reimbursed reasonable attorneys' fees and costs, including costs of appeal.

Section 5.11 Notices

All notices and other communications hereunder shall be in writing and shall be deemed to have been duly given if sent by Certified Mail, Return Receipt Requested, as follows:

TO YMCA:
President/CEO
Volusia Flagler YMCA, Inc.
761 International Speedway
DeLand, FL 32724

TO CITY:
City Manager
City of Holly Hill
1065 Ridgewood Avenue
Holly Hill, FL 32117

Section 5.12 Damage to FACILITIES

If at any time during the term of this Lease the FACILITIES shall be lost or destroyed so as to be wholly or partially untenantable, CITY shall have the option of either restoring the FACILITIES or terminating this Lease, and shall exercise the option within the first sixty (60) days after the casualty. Rent shall be equitably apportioned during any such period of repair or restoration.

Attachment: YMCA Lease Agreement Effective 10-1-2019 (2019-R-39 : YMCA One Year Lease Agreement)

IN WITNESS WHEREOF, the parties hereto have made and executed this Lease by and through their authorized representatives on the respective dates under each signature.

WITNESS

CITY OF HOLLY HILL, FLORIDA

_____

By: _____
Joseph Forte, City Manager

_____

Attest: _____
Valerie Manning, City Clerk

VOLUSIA FLAGLER YOUNG MENS
CHRISTIAN ASSOCIATION, INC.

_____

_____

By: _____

Chris Seilkop, President/CEO

Attachment: YMCA Lease Agreement Effective 10-1-2019 (2019-R-39 : YMCA One Year Lease Agreement)

STAFF REPORT
CITY OF HOLLY HILL, FLORIDA

City Commission
Agenda Item

MEETING DATE: **June 25, 2019**
FROM: **Valerie Manning**
SUBJECT: **Employee Benefits Insurance Agent of Record Services**
NUMBER: **(ID # 2552)**
APPLICANT:
PLANNER: **Diane Cole**

DISCUSSION:

The City's current contract with Brown & Brown as agent of record to provide employee benefit services is set to expire on December 31, 2019. Per the agreement, which was effective December 1, 2016, the City shall have the right to exercise two (2) successive one (1) year extensions on the same terms and conditions by providing the agent of record with written notice at least thirty (30) days before the end of the term.

FISCAL ANALYSIS:

The amount of $35,000 is the current budgeted annual amount for Brown and Brown to conduct these services.

STAFF RECOMMENDATION:

Continuation of the current agreement with Brown and Brown to serve as the City's agent of record to provide employee benefit services as included in the agreement approved by the City Commission on November 15, 2016.

COMMISSION GOAL:

Goal #1: Develop and maintain a sound and sustainable financial plan for the city that establishes sufficient reserves for all funds, ensures (whenever possible) that user fees pay for services rendered, provides a realistic capital improvement program, and encourages public/private sector partnerships and intergovernmental partnerships.

MOTION:

Motion to authorize the City Manager to execute an agreement with Brown and Brown, Employee Benefits Division for a one (1) year extension on the same terms and conditions of the current agreement, effective January 1, 2020.

- B&B Employee Benefits Serv Contract (PDF)

Attachment: B&B Employee Benefits Serv Contract (2552 : Employee Benefits Insurance Agent of Record Services)

EXHIBIT "A"

INSURANCE CONSULTING SERVICES AGREEMENT

THIS AGREEMENT made and entered by and between the City of Holly Hill (City) and Brown & Brown Insurance (Agent of Record).

WITNESSETH

WHEREAS, the City desires to retain and engage an AGENT OF RECORD for the City for employee benefit programs.

WHEREAS, the parties hereto have reached an understanding with each other regarding the professional services to be performed and the compensation to be paid for such services as more specifically set forth herein.

NOW, THEREFORE, for and in consideration of mutual covenants contained herein, the sufficiency of which are hereby acknowledged, the undersigned parties hereby agree to the following:

1) Engagement and Scope of Service. The City hereby retains the Agent of Record and the Agent of Record hereby accepts said engagement for the purpose of providing the City with professional services related to the City's insurance, including but not limited to:

a) Continually review the City's insurances and make recommendations to the City regarding all issues related to the City's insurances, including but not limited to the types of insurance needed, appropriate coverages and appropriate deductibles.

b) Market the insurance coverages on an annual basis including review of coverage forms, terms and conditions.

c) Review all insurance submittals and provide a summary to the City of all relevant information regarding each submittal including an evaluation of the limits, retentions, coverages, exclusions and pricing of all submittals. Agent of Record shall make a written recommendation to the City and

detail the basis for the recommendation, including an evaluation of the limits, retentions and coverages. Agent of Record shall also evaluate the financial strength and solvency of each bidder.

d) Assist the City in negotiating coverages, policy language, services, limits, retention and price with a proposed insurer. Provide expertise in negotiations with insurers to obtain acceptable policy terms and conditions and in the preparation of manuscript forms and endorsements.

e) Assist the City to facilitate the review of all claims and to advocate for the City's interest.

f) Assist the City in all disputes with the City's insurance companies and to advocate for the City's interest.

g) Continually review and monitor applicable rules and laws and assure that the City's insurance programs are in compliance with all Federal, State, and Local rules. Ensure that all insurance coverage provided by the City's insurer's at all times meet or exceed the City's requested coverage. Continually monitor the financial strength and solvency of each of the City's insurance companies and advise the City of condition(s) that may adversely impact the insurance company's ability to fulfill its contractual obligations to the City.

h) Assess the cost effectiveness of such programs, offer alternatives for evaluation, and recommend changes that are in the best interest of the City.

i) Advise on current trends or innovative programs that may be of interest to or benefit the City.

j) Provide such other assistance as the City may request from the Agent of Record related to the City's insurance.

2) City Insurance. The Agent of Record agrees to provide the service described in Paragraph 1 above for all of the City's insurance, including insurance the City does not currently have but may elect to purchase during the term of this Agreement. The City's insurance shall at a minimum consist of the following:

(a) Employee Benefit Programs. Benefits shall include dental, vision, life, and voluntary benefit services.

Attachment: B&B Employee Benefits Serv Contract (2552 : Employee Benefits Insurance Agent of Record Services)

3) Duration and Termination. The initial term of this Agreement shall be from 12/01/16 date and shall expire on 12/31/18. The City shall have the right to exercise two (2) successive one (1) year extensions on the same terms and conditions by providing the Agent of Record with written notice at least thirty (30) days before the end of the term of the City's intent to exercise the extension. In the event the City does not provide written notice of intent to exercise the extension, the Agreement shall expire. The Agreement may be terminated during the term as follows:

a. Either party shall have the right to terminate without cause upon providing the other party at least thirty (30) days advance written notice. If the Agent of Record terminates without cause, the Agent of Record shall not be entitled to any compensation from the effective date of termination. The City has the option of waiving the thirty (30) day notice and making the termination effective at an earlier date including up to the date of receipt of the notice. In the event the City terminates without cause, the Agent of Record will be paid the full compensation owed through the end of the current term of the Agreement as if the Agreement had not been terminated.

b. Either party shall have the right to terminate for cause upon providing the other party written notice outlining in detail the breach(s). The breaching party shall have thirty (30) days from receipt of said notice to correct the breach(s). In the event the breach(s) are not corrected within said period of time, the non-breaching party can terminate immediately upon providing the breaching party a written notice of termination. In the event the City terminates for cause, the Agent of Record shall not be entitled to receive any additional compensation after the effective date of the termination as provided in the written notice of termination. In the event the Agent of Record terminates for cause, the Agent of Record will be paid the full compensation owed through the end of the current term of the Agreement as if the Agreement had not been terminated. The only basis for the Agent of Record to terminate for cause is in the event the City fails to pay the Agent of Record compensation that is due and owing.

Attachment: B&B Employee Benefits Serv Contract (2552 : Employee Benefits Insurance Agent of Record Services)

4. Compensation. The Agent of Record shall be paid the total sum of $70,000 for the services rendered for the duration of the contract.

Year One: $35,000 Period 12/01/16 - 12/31/17
Year Two: $35,000 Period 01/01/18 - 12/31/18

Total: $70,000

Options (if elected by City)
Year Three: $35,000 Period 01/01/19 - 12/31/19
Year Four: $35,000 Period 01/01/20 - 12/31/20

One-half of the Annual compensation shall be paid within thirty (30) days of the City purchasing/renewing all insurance covered by this Agreement. The annual balance shall be paid in four equal quarterly installments from the effective date of this Agreement through the end of the annual period. Payment shall be made by the 15th of the first month of the quarter. Agent of Record shall be responsible for all costs it incurs in providing the City the services outlined in this Agreement. Agent of Record shall execute an affidavit(s) at the request of the City attesting that the insurance premiums paid by the City are net of any commission or other benefit paid to the Agent of Record and that the Agent of Record has not received any compensation or any other form of benefit due to the City purchasing said insurance(s) other than the compensation paid by the City.

5. Prohibited Services, Compensation and Conflicts. The Agent of Record hereby represents that the only compensation or any other form of benefit the Agent of Record received or will receive in any way related to the insurance obtained pursuant to this Agreement is the compensation set forth in Paragraph 4 above. The Agent of Record will act in the capacity as a broker, agent or agent of record for any insurance obtained or procured pursuant to this Agreement. At all times the Agent of Record shall avoid any relationship with any of the City's insurance companies that would create or give the appearance of a conflict of interest. Any questionable relationship shall be disclosed to the City and the City shall make the final determination as to whether the relationship creates a conflict of interest. In the event the City determines that a relationship creates a conflict of interest, the Agent of Record shall either not have the relationship with the insurance company or terminate this agreement without cause.

Attachment: B&B Employee Benefits Serv Contract (2552 : Employee Benefits Insurance Agent of Record Services)

6. Insurance. The Agent of Record shall at a minimum provide the following insurance and the City shall be named as an additional named insured on each policy:

a) Commercial liability insurance in an amount of not less than $1,000,000 combined single limit, per occurrence for bodily injury and property damage.

b) Automobile liability insurance covering all owned, non-owned and hired vehicles used in connection with the operation of the Agent of Record, in an amount of not less than $1,000,000 combined single limit per occurrence for bodily injury and property.

c) Workers' compensation insurance for all employees of the proposing agency as required by Florida Law to include employee liability of not less than $500,000 for each occurrence.

d) Errors and omissions liability coverage in an amount of not less than $5,000,000.

7. Governing Law, Venue, Attorney Fees and Severability. The rights, obligations and remedies of the parties as specified under this Agreement shall be interpreted and governed by laws of the State of Florida. Should any provision of this Agreement be determined by the courts to be illegal or in conflict with any law of the State of Florida, the validity of the remaining provisions shall not be impaired. Venue for any litigation arising out of or in any way related to this Agreement shall be in State Court, Volusia County, Florida and the Agent of Record specifically waives any Federal Court jurisdiction. The prevailing party in any litigation arising out of or in any way to related to this Agreement shall be entitled to be reimbursed reasonable attorney fees and costs, including all cost of appeal.

8. Entire Agreement. This Agreement constitutes the entire agreement between the parties hereto for the services to be performed and furnished by the Agent of Record hereunder. No statement, representation, writing understanding or agreement made by either party, or any representative of either party, which is not expressed herein shall not be binding. All changes to, additions to, modifications of, or amendments to this Agreement, or any of the terms, provisions and conditions

Attachment: B&B Employee Benefits Serv Contract (2552 : Employee Benefits Insurance Agent of Record Services)

hereof, shall be binding only when in writing and signed by the authorized officer, agent or representative of each of the parties hereto.

9. This Agreement shall be effective on December 1, 2016

City of Holly Hill

By: Joseph Jon

Title: City Manager

Date: 11/17/16

Brown & Brown Insurance

By: [illegible]

Title: Executive Vice President

Date: 10/31/16

Attachment: B&B Employee Benefits Serv Contract (2552 : Employee Benefits Insurance Agent of Record Services)

HOLLY HILL
FLORIDA

STAFF REPORT
CITY OF HOLLY HILL, FLORIDA

City Commission
Resolution

MEETING DATE: **June 25, 2019**
FROM: **Valerie Manning**
SUBJECT: **A Resolution of the City Commission of the City of Holly Hill, Volusia County, Florida, Amending the Adopted Budget for the City of Holly Hill for the Fiscal Year 2018-2019; Providing for Severability; and Providing for an Effective Date.**
NUMBER: **2019-R-40**
APPLICANT:
PLANNER:

DISCUSSION:

The City Manager performed an extensive mid-year review of the revenue and expenditure figures for each fund to compare the current amounts with the amount budgeted; and the City Commission of the City of Holly Hill amends the Fiscal Year 2018-2019 budget by revising the budget decreasing in total of $809,396, pursuant to itemizations contained in Exhibit "A" of the Resolution.

FISCAL ANALYSIS:

Adjustments based on mid-year budget review by the City Commission.

STAFF RECOMMENDATION:

Approve the Resolution by adopting the mid-year amended budget.

COMMISSION GOAL:

Goal #1: Develop and maintain a sound and sustainable financial plan for the city that establishes sufficient reserves for all funds, ensures (whenever possible) that user fees pay for services rendered, provides a realistic capital improvement program, and encourages public/private sector partnerships and intergovernmental partnerships.

MOTION:

APPROVE RESOLUTION BY AMENDING THE ADOPTED BUDGET FOR THE CITY OF HOLLY HILL FOR THE FISCAL YEAR 2018-2019.

ATTACHMENTS:

- FY 2018 - 2019 Budget Amendment - Exhibit A (PDF)

Resolution No. 2019-40

A RESOLUTION OF THE CITY COMMISSION OF THE CITY OF HOLLY HILL, VOLUSIA COUNTY, FLORIDA, AMENDING THE ADOPTED BUDGET FOR THE CITY OF HOLLY HILL FOR THE FISCAL YEAR 2018-2019; PROVIDING FOR SEVERABILITY; AND PROVIDING FOR AN EFFECTIVE DATE.

A RESOLUTION OF THE CITY COMMISSION OF THE CITY OF HOLLY HILL, VOLUSIA COUNTY, FLORIDA, AMENDING THE ADOPTED BUDGET FOR THE CITY OF HOLLY HILL FOR THE FISCAL YEAR 2018-2019; AND PROVIDING FOR SEVERABILITY; AND PROVIDING FOR AN EFFECTIVE DATE.

WHEREAS, the City of Holly Hill, by Resolution 2018-R-64, adopted an operating budget for Fiscal Year 2018-2019; and

WHEREAS, the budget adjustment decreases revenues and expenditures in total pursuant to itemizations contained in Exhibit "A", which is attached hereto and incorporated herein; and

WHEREAS, the budget adjustments will allow the City of Holly Hill to adjust the Fiscal Year 2018-2019 budget.

NOW, THEREFORE, BE IT RESOLVED BY THE CITY COMMISSION OF THE CITY OF HOLLY HILL, FLORIDA:

SECTION 1. Amended Budget: The City Commission of the City of Holly Hill amends the Fiscal Year 2018-2019 budget by revising the budget in total pursuant to itemizations contained in Exhibit "A", which is attached hereto and incorporated herein.

SECTION 2. Effective Date. This Resolution shall become effective immediately upon its adoption.

APPROVED AND AUTHENTICATED on this 25th day of JUNE, 2019.

Exhibit "A"

FY 2018 - 2019 BUDGET AMENDMENT

FUND BUDGET DETAIL

REVENUES AND EXPENSES FY 2018 - 2019	REVENUES	EXPENSES	VARIANCE
001 - GENERAL FUND	$ (1,154,299)	$ (1,154,299)	$ -
004 - BUILDING AND ZONING	$ 55,000	$ 55,000	$ -
130 - CRA	$ 218,518	$ 218,518	$ -
460 - STORMWATER	$ 71,385	$ 71,385	$ -
TOTAL ALL FUNDS	$ (809,396)	$ (809,396)	$ -

Attachment: FY 2018 - 2019 Budget Amendment - Exhibit A (2019-R-40 : Budget Resolution for FY2018-2019)